Fort Stewart, Georgia

Imagine the result

IMA

3d Inf Div (Mech)

SWMU 39
RCRA Facility Investigation Report
Direct Support Maintenance Facility

Fort Stewart, Georgia

EPA ID # GA9 210 020 872

AEDR-R # CCFST-039

February 2013

Revision 1 – January 2014

Revision 2 – May 2014

Revision 3 – August 2014

Revision 4 – December 2014

ARCADIS MALCOLM PIRNIE

Infrastructure · Water · Environment · Buildings

DOCUMENT 4

ARCADIS

SWMU 39 RCRA Facility Investigation Report

Direct Support Maintenance Facility

FOR

Steve LaMonte
Geologist

Charles A. Bertz, PE
Principal Engineer

Shelley Gibbons
Senior Engineer/Project Manager

Prepared for:
US Army Environmental Command

Prepared by:
ARCADIS
801 Corporate Center Drive
Suite 300
Raleigh
North Carolina 27607
Tel 919 854 1282
Fax 919 854 5448

Our Ref.:
GP09HAFS.F39A.DPRFI

GEORGIA REGISTERED PROFESSIONAL ENGINEERING CERTIFICATION

I certify that I am a qualified professional engineer who has received a baccalaureate or post-graduate degree in engineering and have sufficient training and experience in environmental engineering and related fields, as demonstrated by state registration and completion of accredited university courses, to enable me to make sound professional judgments regarding groundwater monitoring and contaminant fate and transport. I further certify that this report was prepared by myself or by a subordinate working under my direction.

Name: Charles A. Bertz, P.E.

License Number: 029498

Expiration Date: December 31, 2014

Charles A. Bertz, P.E.

1·22·2014

Original – February 2013
Revision 01 – January 2014

Appendices **x**

Executive Summary **xv**

1. Introduction **1-1**

1.1 Site Background 1-1

2. Environmental Setting **2-1**

2.1 Topography 2-1

2.2 Geology 2-1

2.3 Hydrogeology 2-2

2.4 Surface Water Resources 2-2

3. Description of RFI Activities and Removal Actions **3-1**

3.1 Previous RFI Investigations 3-1

3.1.1 1997 UST Closure 3-1

3.1.2 2001 and 2002 Investigations 3-1

3.1.3 2004 Investigations 3-2

3.1.4 2007 Interim Remedial Action 3-3

3.1.5 2008 Investigations 3-3

3.2 Excavation Activities at UST 61 3-4

4. Current RFI Investigation Activities **4-1**

4.1 Screening Criteria 4-2

4.2 March and April 2010 Investigation Activities 4-3

4.2.1 Groundwater Investigation 4-3

4.2.1.1 Groundwater Sampling 4-4

4.2.1.2 Vertical Aquifer Profiling 4-5

4.2.2 LNAPL Investigation 4-6

4.2.3 Background Soil Investigation 4-7

4.2.4 April 2010 Surface Water and Sediment Investigation 4-7

4.2.4.1 Surface Water 4-8

4.2.4.2 Sediment 4-8

4.2.4.3 Summary of Surface Water and Sediment Investigation 4-9

4.3 September 2010 through January 2011 Investigation Activities 4-9

4.3.1 September 2010 Confirmation Event 4-9

4.3.2 October 2010 MIP/VAP Investigation 4-11

4.3.2.1 MIP Investigation 4-11

4.3.2.2 VAP Investigation 4-12

4.3.2.3 October 2010 MIP/VAP Investigation Results 4-13

4.3.2.4 November and December 2010 Monitor Well Installations 4-14

4.3.2.5 January 2011 Slug Testing 4-14

4.3.2.6 January 2011 Groundwater Monitoring 4-15

4.4 April and May 2011 Investigation Activities 4-16

4.4.1 April-May 2011 Groundwater Monitoring 4-16

4.4.2 April-May 2011 Soil Sampling 4-18

4.5 August 2011 Investigation Activities 4-19

4.6 October 2011 Investigation Results 4-19

5. Conceptual Site Model 5-1

5.1 Setting 5-1

5.2 Hydrogeology Summary 5-1

5.2.1 Hydrostratigraphy 5-1

5.2.2 Groundwater Trends and Velocity 5-2

5.3 Groundwater Quality 5-3

5.3.1 Shallow Groundwater 5-3

5.3.2 Deep Groundwater 5-4

5.3.3 Overall Groundwater Quality 5-5

5.4 LNAPL 5-5

5.5 Soils 5-6

5.5.1 Surface Soil 5-6

5.5.2 Subsurface Soil 5-6

5.6 Surface Water and Sediment 5-8

6. Human Health Risk Assessment 6-1

6.1 Constituent Characterization 6-1

6.1.1 Data Evaluation 6-2

6.1.1.1 Surface Soil 6-3

6.1.1.2 Subsurface Soil 6-3

6.1.1.3 Combined Surface and Subsurface Soil 6-4

6.1.1.4 Sediment 6-4

6.1.1.5 Surface Water 6-5

6.1.1.6 Groundwater 6-5

6.2 Exposure Assessment 6-5

6.2.1 Site Conceptual Exposure Model 6-6

6.2.2 Potential Receptors 6-7

6.2.3 Exposure Point Concentrations 6-8

6.2.4 Physical and Chemical Properties 6-8

6.2.4.1 Particulate Emissions from Soil 6-8

6.2.4.2 Volatilization Factor for Soil 6-9

6.2.4.3 Volatilization Factor for Surface Water 6-9

6.2.4.4 Vapor Intrusion into Buildings 6-9

6.2.4.5 Dermal Absorption of Constituents of Potential Concern in Soil 6-10

6.2.4.6 Dermal Absorption of Constituents of Potential Concern in Water 6-10

6.2.5 Exposure Assumptions 6-10

6.2.5.1 Current and Hypothetical Future Site Worker 6-11

6.2.5.2 Hypothetical Future Construction Worker 6-12

6.2.5.3 Hypothetical Adolescent Trespasser 6-12

6.2.5.4 Hypothetical Future Resident 6-12

6.3 Toxicity Assessment 6-12

6.3.1 Noncarcinogenic Effects 6-12

6.3.2 Carcinogenic Effects 6-13

6.3.3 Dermal Toxicity Values 6-14

6.4 Risk Characterization 6-14

6.4.1 Hazard Quotient for Non-Cancer Hazard 6-15

6.4.2 Excess Lifetime Cancer Risk 6-15

6.4.3 Current Site Worker 6-16

6.4.4 Hypothetical Future Site Worker 6-16

6.4.5 Hypothetical Construction Worker 6-16

6.4.6 Hypothetical Adolescent Trespasser 6-17

6.4.7 Hypothetical Resident 6-17

6.5 Remedial Goal Option Calculations 6-18

6.6 Uncertainty 6-19

6.6.1 Data Evaluation 6-19

6.6.1.1 Sample Location and Collection 6-20

6.6.1.2 Screening of Constituents of Potential Concern 6-20

6.6.2 Exposure Assessment 6-20

6.6.2.1 Exposure Scenarios 6-20

6.6.2.2 Exposure Point Concentrations 6-21

6.6.3 Toxicity Assessment 6-21

6.6.4 Risk Characterization 6-22

6.7 Summary and Conclusions 6-22

7. Preliminary Ecological Risk Evaluation 7-1

7.1.1 Surface Soil 7-3

7.1.2 Sediment 7-3

7.1.3 Surface Water 7-3

7.2 Preliminary Problem Formulation 7-3

7.2.1 Environmental Setting 7-3

7.2.2 Description of Potentially Exposed Receptors 7-4

7.3 Preliminary Ecological Effects Evaluation 7-5

7.4 Preliminary Exposure Estimates 7-5

7.5 Preliminary Risk Calculation 7-5

7.6 Results and Conclusions 7-7

8. Conclusions and Recommendations 8-1

8.1 Conclusions 8-1

8.1.1 Physical Data 8-2

8.1.2 Analytical Data 8-3

8.1.2.1 Soils 8-3

8.1.2.2 LNAPL 8-3

8.1.2.3 Groundwater 8-4

8.1.2.4 Surface Water and Sediment 8-5

8.1.3 Human Health Risk Assessment 8-5

8.1.4 Ecological Risk Assessment 8-6

8.2 Recommendations 8-7

9. References 9-1

Tables

Table 3-1 Historic Groundwater Analytical Data

Table 3-2 2004 Soil Analytical Data

Table 3-3 2004 Surface Water Analytical Data

Table 3-4 2004 Sediment Analytical Data

Table 3-5 2008 DPT Groundwater Screening Results

Table 4-1 Summary of Monitoring Well Construction Details

Table 4-2 March 2010 Water Levels

Table 4-3 March/April 2010 Groundwater Analytical Data

Table 4-4 March through September 2010 VAP Groundwater Data

Table 4-5 March/April 2010 VAP Groundwater Field Parameters

Table 4-6 2010 and 2011 Soil Analytical Data

Table 4-7 April 2010 Surface Water Field Parameters

Table 4-8 April 2010 Surface Water Analytical Data

Table 4-9 April 2010 Sediment Analytical Data

Table 4-10 September 2010 Saturated Soil Analytical Data

Table 4-11 November 2010 VAP Sampling Analytical Data

Table 4-12 January 2011 Water and Product Levels

Table 4-13 January 2011 Field Parameters

Table 4-14 January 2011 Groundwater Analytical Data

Table 4-15 May 2011 Water and Product Levels

Table 4-16 May 2011 Groundwater Analytical Data

Table 4-17 August through October 2011 Water Levels

Table 4-18 August 2011 Groundwater Analytical Data

Table 4-19 October 2011 Groundwater Analytical Data

Table 6-1 Selection of Constituents of Potential Concern for Surface Soil (0-1 foot)

Table 6-2 Selection of Constituents of Potential Concern for Subsurface Soil (1-8 feet)

Table 6-3 Selection of Constituents of Potential Concern for Soil (0-8 feet)

Table 6-4 Selection of Constituents of Potential Concern for Sediment

Table 6-5 Selection of Constituents of Potential Concern for Surface Water

Table 6-6 Selection of Constituents of Potential Concern for Groundwater

Table 6-7 Exposure Point Concentrations

Table 6-8 Physical and Chemical Properties of the Constituents of Potential Concern

Table 6-9 Risk and Hazard Equations for a Current and Hypothetical Future Site Worker and Hypothetical Construction Worker Exposure to Soil

Table 6-10 Risk and Hazard Equations for Hypothetical Adolescent Trespasser and Future Resident Exposure to Soil

Table 6-11 Soil Particulate Emission Factors

Table 6-12 Soil Volatilization Factors

Table 6-13a Risk and Hazard Equations for Wading Exposure to Surface Water

Table 6-13b Dermal Absorption Parameters

Table 6-14 Surface Water Volatilization Factors

Table 6-15 Risk and Hazard Equations for Exposure to Sediment

Table 6-16 Receptor Exposure Parameters

Table 6-17 Noncarcinogenic Toxicity Values for Oral and Dermal Exposure

Table 6-18 Noncarcinogenic Toxicity Values for Inhalation Exposure

Table 6-19 Carcinogenic Toxicity Values for Oral and Dermal Exposure

Table 6-20 Carcinogenic Toxicity Vales for Inhalation Exposure

Table 6-21 Risk and Hazard Calculations for a Current Site Worker Receptor for Exposure to Surface Soil (0-1 foot)

Table 6-22 Risk and Hazard Calculations for a Hypothetical Future Site Worker Receptor for Exposure to Subsurface Soil (1-8 feet)

Table 6-23 Risk and Hazard Calculations for a Hypothetical Future Construction Worker Receptor for Exposure to Soil (0-8 feet)

Table 6-24 Risk and Hazard Calculations for a Hypothetical Adolescent Trespasser Receptor for Exposure to Surface Soil (0-1 foot)

Table 6-25 Risk and Hazard Calculations for a Hypothetical Adolescent Trespasser Receptor for Exposure to Subsurface Soil (1-8 feet)

Table 6-26 Risk and Hazard Calculations for a Hypothetical Adolescent Trespasser Receptor for Exposure to Sediment while Wading

Table 6-27a Risk and Hazard Calculations for a Hypothetical Adolescent Trespasser Receptor for Exposure to Surface Water while Wading

Table 6-27b Hypothetical Adolescent Trespasser Exposure Associated with Lead in Surface Water

Table 6-28 Risk Calculations for a Hypothetical Future Child Resident Receptor for Exposure to Surface Soil (0-1 foot)

Table 6-29 Risk Calculations for a Hypothetical Future Child Resident Receptor for Exposure to Subsurface Soil (1-8 feet)

Table 6-30 Risk and Hazard Calculations for a Hypothetical Future Adult Resident Receptor for Exposure to Surface Soil (0-1 foot)

Table 6-31 Risk Calculations for a Hypothetical Future Adult Resident Receptor for Exposure to Subsurface Soil (1-8 feet)

Table 6-32 Summary of Calculated Human Health Risks and Hazards

Table 6-33 Calculation of Remedial Goal Options, Site Worker Receptor Exposed to Soil

Table 6-34 Calculation of Remedial Goal Options, Hypothetical Adolescent Trespasser Receptor Exposed to Soil

Table 6-35 Calculation of Remedial Goal Options, Hypothetical Future Child Resident Receptor Exposed to Soil

Table 6-36 Calculation of Remedial Goal Options, Hypothetical Future Adult Resident Receptor Exposed to Soil

Table 7-1 Selection of Constituents of Potential Ecological Concern for Surface Soil (0-1 ft)

Table 7-2 Selection of Constituents of Potential Ecological Concern for Sediment

Table 7-3 Selection of Constituents of Potential Ecological Concern for Surface Water

Table 7-4 Risk Characterization for Surface Soil (0-1 ft)

Figures

Figure 1-1 SWMU 39 Location Map

Figure 1-2 Site Map

Figure 1-3 Direct Support Maintenance Facility Area

Figure 2-1 Regional Watershed Drainage

Figure 3-1 Soil Sampling Analytical Results (2004)

Figure 3-2 Surface Water/Sediment Sample Location (April 2004)

Figure 3-3 DPT Groundwater Investigation TCE and PCE Screening Results (February 2008)

Figure 3-4 Potentiometric Surface Map (March/April 2008)

Figure 3-5 Estimated Extent of LNAPL (March 2008)

Figure 3-6 TCE and PCE Concentrations in Groundwater (March/April 2008)

Figure 4-1 DPT Groundwater Analytical Results (March/April 2010)

Figure 4-2 Surface Soil Sample Results (2010/2011)

Figure 4-3 Subsurface Soil Sample Results (2010/2011)

Figure 4-4 Concentrations Detected in Surface Water/Sediment (April 2010)

Figure 4-5 VAP Analytical Results (November 2010)

Figure 4-6 Shallow Zone Groundwater VOC Sampling Results (2011)

Figure 4-7 Deep Zone Groundwater VOC Sampling Results (2011)

Figure 4-8 Deep Zone Groundwater TCE Sampling Results (2011)

Figure 4-9 Deep Zone Groundwater bis(2-Chloroisopropyl)Ether Sampling Results (2011)

Figure 4-10 Shallow Zone Groundwater Arsenic and Lead Sampling Results (2011)

Figure 4-11 Deep Zone Groundwater Arsenic Sampling Results (2011)

Figure 4-12 Shallow Potentiometric Surface Map (May 2011)

Figure 4-13 Deep Potentiometric Surface Map (May 2011)

Figure 5-1 Geologic Cross-Section Locations

Figure 5-2 Trichloroethene in Groundwater Along Geologic Cross-Section A-A'

Figure 5-3 Trichloroethene in Groundwater Along Geologic Cross-Section B-B'

Figure 5-4 Trichloroethene in Groundwater Along Geologic Cross-Section C-C'

Figure 5-5 Estimated Extent of LNAPL

Figure 6-1 Site Conceptual Exposure Model for Potential Human Health Receptors

Appendices

A Soil Background Study

B Monitor Well Construction Logs

C Groundwater Sampling Logs

D Laboratory Reports

E Soil Boring Logs

F MIP Response Logs and Slug Test Results

G Fort Stewart Utility Maps

H ProUCL Outputs

I Vapor Intrusion Model for Soil – Site Worker

J Vapor Intrusion Model for Soil – Resident

K Federal and State Listed and Candidate Species of Potential Occurrence

L Photos of the Drainage Ditch

M Site-Specific Soil Screening Levels

Acronyms and Abbreviations

amsl	above mean sea level
ARCADIS	ARCADIS U.S. Inc.
ASBd	Dermal Absorption Efficiencies
ASTM	American Society for Testing and Materials
CAP	Corrective Action Plan
cm/sec	centimeters per second
COPC	Constituent of Potential Concern
COPEC	Constituent of Potential Ecological Concern
CSF	Cancer Slope Factor
CSF_a	Adjusted Cancer Slope Factor
CSF_o	Oral Toxicity Cancer Slope Factor
CSM	Conceptual Site Model
DCE	cis-1,2-dichloroethene
DO	Dissolved Oxygen
DOT	U. S. Department of Transportation
DPT	direct push technology
DSMF	Direct Support Maintenance Facility
EC	Electrical Conductivity
ECD	Electron Capture Detector
ELCR	Excess Lifetime Cancer Risk
EPC	Exposure Point Concentration
ESV	Ecological Screening Value
ft	feet
FID	flame ionization detector
FOD	Frequency of Detection
ft bgs	feet below ground surface

Acronyms and Abbreviations

GAEPD	Georgia Environmental Protection Division
GC/MS	Gas Chromatograph / Mass Spectrometer
HHRA	Human Health Risk Assessment
HI	Hazard Index
HOT	heating oil tank
HPAH	Higher Molecular Weight PAHs
HQ	Hazard Quotient
IDW	Investigation Derived Waste
K_{oc}	Organic carbon Partition Coefficient
Kp	Permeability Coefficient
LNAPL	Light Non-Aqueous Phase Liquid
LPAH	Lower Molecular Weight PAHs
MCL	Maximum Contaminant Limit
M60	Mechanized 60
µg/L	micrograms per Liter
$\mu g/m^3$	micrograms per cubic meter
mg/kg	milligrams per kilogram
mg/L	milligrams per Liter
MIP	Membrane Interface Probe
NELAC	National Environmental Laboratory Accreditation Conference
NOAA	National Oceanic and Atmospheric Administration
ORC®	Oxygen Releasing Compound ®
ORNL	Oak Ridge National Laboratory
ORP	Oxygen Reduction Potential
PAH	polyaromatic hydrocarbon
PBC	Performance Based Contract

Acronyms and Abbreviations

PCE	tetrachloroethene
PEF	Particulate Emission Factors
PID	photoionization detector
PPE	Personal protective equipment
PRE	Preliminary Risk Evaluation
PVC	polyvinyl chloride
QA/QC	Quality Assurance and Quality Control
RBSL	Risk Based Screening Level
RCRA	Resource Conservation Recovery Act
RfC	Reference Concentration
RfD	Reference Dose
RfD_a	Adjusted Reference Dose
RfD_o	Oral Toxicity Reference Dose
RFI	RCRA Facility Investigation
RGO	Remedial Goal Option
RME	Reasonable Maximum Exposure
RSL	Regional Screening Level
SCEM	Site Conceptual Exposure Model
SES	SpecPro Environmental Services LLC
SESD	USEPA Science and Ecosystem Support Division
Shealy	Shealy Environmental Services, Inc.
SQL	Sample Quantitation Limit
SSL	Soil Screening Level
SVOC	Semivolatile Organic Compound
SWMU	Solid Waste Management Unit
TCE	trichloroethene

Acronyms and Abbreviations

TCR	Target Cancer Risk
95UCL	95 Percent Upper Confidence Level
USAEC	United States Army Environmental Command
USEPA	U. S. Environmental Protection Agency
USGS	United States Geological Survey
UST	Underground Storage Tank
VAP	Vertical Aquifer Profile
VC	vinyl chloride
VF	Volatilization Factor
VOC	Volatile Organic Compound

Executive Summary

This report summarizes the Resource Conservation and Recovery Act (RCRA) Facility Investigation (RFI) for the Direct Support Maintenance Facility, Solid Waste Management Unit (SWMU) 39, at Fort Stewart, Georgia (the Site). The investigation activities were conducted between 2001 and 2011 to understand the nature and extent of impacts associated with historic site operations Horizontal and vertical delineation of impacts, potential migration of constituents in each medium, identification of constituents of potential concern (COPCs), and evaluation of potential impacts to human health and the environment are considered sufficiently complete.

SWMU 39 refers to the Direct Support Maintenance Facility (DSMF) or Building 1160 and includes the groundwater impacts identified to the south and east of the fenced area. Historically the DSMF was used as a vehicle wash/service rack. Two former underground storage tanks (USTs), USTs 59 and 60, and their associated heating oil tanks (HOTs) were west of Building 1160, at the tracked vehicle maintenance platforms (Buildings 1161 and 1163; Figure 1-3). The HOTs provided fuel oil to a high-pressure washer at the platform. USTs 59 and 60, were 4,000 gallon concrete USTs utilized as non-regulated flow vaults connected to an oil water separator located at the Mechanized 60 (M60) maintenance platforms. An additional 500 gallon UST (61) was located immediately southeast of the tracked vehicle maintenance platform (Building 1161) and was used for the storage of used oil. The 500 gallon used oil UST (61) was removed from the Site. The two HOTs plus the two 4,000 gallon concrete USTs (59&60) were filled with grout and closed-in-place.

After the USTs and HOTs were closed, Georgia Environmental Protection Division (GAEPD) Underground Storage Tank Management Program (USTMP) program requested investigation of the soil and groundwater to determine if a release had occurred. The investigations were initiated in 2001. A light non-aqueous phase liquid (LNAPL) believed to be waste oil was detected near Building 1161 and former UST 61. Based on the investigation results, the Site was listed as SWMU 39. Excavations were conducted in 2006 near former UST 61and 2007 near Building 1161 to remove the LNAPL and impacted soil. In April 2008, LNAPL was detected again in an additional monitor well near Building 1161. In addition to LNAPL, historical groundwater investigations identified a diffuse volatile organic compound (VOC) plume, consisting primarily of tetrachloroethene (PCE) and trichloroethene (TCE). The reported TCE concentrations in April 2008 were low with a maximum detection of 27 micrograms per liter (µg/L). However, the previous investigations had not fully delineated the extent of the groundwater impacts or identified the source. Additional investigations were conducted in 2010 and 2011.

In 2010, additional investigations were initiated to delineate the impacts to shallow groundwater and investigate potential sources of the impacts. Between 2010 and 2011, 95 vertical aquifer profile (VAP) groundwater samples were collected and twenty-six (26) new monitor wells were added to the monitoring network. The VAP samples provided screening level data to evaluate potential source areas and the extent of impacts. Based on the VAP, an area of higher level TCE, PCE and cis-1,2-dichloroethene (DCE) concentrations in deeper groundwater was identified upgradient of the DSMF with diffuse low level PCE and TCE (<100 ug/L) plume present across much of the Site with a concentrated PCE and TCE plume (>1,000 ug/L). The VAP samples were used to determine the approximate extent of impacts and where additional monitor wells were required to monitor the groundwater quality.

The majority of the additional wells were installed along the periphery of the chlorinated VOC plume to provide delineation of the groundwater impacts. Benzene was also detected above the regional screening level (RSL) and maximum contaminant limit (MCL). The detections appear to be localized to two well locations with concentrations in nearby monitor wells either below screening criteria or below detection.

No definitive source was identified for the groundwater impacts, however, informal conversations with site personnel revealed that spent solvents from a former electronic repair may have been disposed of in the sewer lines near Building 1065, the area where the highest impacts have been detected. Utility maps for the area confirm the presence of sewer and water lines where the spent solvents were reportedly disposed. In addition, during the October 2010 membrane interface probe (MIP)/VAP investigation near the southern corner of Building 1065, a concrete utility pipe was detected approximately 9.5 ft below ground surface (ft bgs). The location of the pipe is consistent with the location of water or sewer lines shown on the utility maps. The groundwater impacts have been delineated and appear to initiate close to where the spent solvents were reportedly disposed. It is believed that the sewer lines leaked over time, creating the higher level VOC plume in deep groundwater. These sewer lines may have also contributed to the lower level PCE and TCE detections across the Site by providing a pathway for contaminant migration. Both water and sewer lines were identified in the area traveling west towards the DSMF.

Surface soil samples collected from within the fenced DSMF during the 2010 investigations reported low level polyaromatic hydrocarbon (PAHs) above the RSL and soil screening level (SSL) and lead in one sample above the background concentration and MCL based SSL. The highest PAH detections were just below the concrete pad along the southwest side of Building 1160. The subsurface soil samples reported decreasing concentrations of

depth with exccedances of the risk based SSL for benzo(a)anthracene and benzo(b)fluoranthene. The subsurface soil sample for lead was below the background soil value. No metals were detected in subsurface soils at concentrations exceeding the background concentrations.

LNAPL associated with historical maintenance operations at Buildings 1161 and 1163, has been detected in G4MW002 since 2002. In March 2010, LNAPL was also detected in nearby monitor well G4MW001. During the March/April 2010 investigations, eight (8) soil borings were collected around the G4MW002 and G4MW001 area to evaluate the extent of LNAPL. No LNAPL was observed in the soil borings indicating the LNAPL is localized near G4MW001 and G4MW002 (Figure 5-5). Free product was measured at 0.65 ft thick in G4MW001 and 3.26 ft thick in G4MW002 during the May 2011 measurement event.

Surface water and sediment samples identified low level semi-volatile organic compound (SVOC) and VOC concentrations below the screening criteria in the drainage canal along the southern edge of the DSMF. Soap suds have been observed in the drainage canal which is most likely related to vehicle washing at the Maintenance Facility. Lead and mercury were also detected in the surface water above the In-Stream Water Quality Standards (IWQS) and arsenic was detected in the sediment above the residential soil RSL. Historically arsenic and lead have been used in pesticides, railway ties, and slag that was used as railway bed fill. Based on the close proximity of the rail lines to the drainage canal, it is believed that the metals detected in surface water and sediment are related to the rail lines and are not associated with the historical activities at SWMU 39.

Human Health Risk Assessment

A Human Health Risk Assessment (HHRA) was conducted to evaluate the potential current and hypothetical future risks and potential hazards to human health associated with constituents detected in surface and subsurface soil, groundwater, sediment, and surface water samples collected at SWMU 39. Twenty-nine COPCs were identified based on detections in surface soil, subsurface soil, sediment, or surface water. The exposure scenarios quantitatively evaluated included exposure to soil by current and future site workers, current and hypothetical adolescent trespasser, hypothetical construction worker, and hypothetical future child and adult residents; exposure to indoor air by a current and future site worker and hypothetical future child and adult residents; and exposure to sediment and surface water by current and hypothetical trespasser.

The groundwater analytical data were reviewed and compared to the United States Environmental Protection Agency (USEPA) tap water RSLs and the drinking water

standards. Based on this evaluation, it was determined that use of the groundwater as a potable water supply would yield an unacceptable risk and/or hazard. The constituents that were present in groundwater above their USEPA tap water RSLs also have established federal drinking water standards or MCLs, with the exception of bis(2-chloroisopropyl)ether which was detected on two occasions at a concentration approximately equal to the USEPA tap water RSL (0.00034 milligrams per liter [mg/L] vs. 0.00031 mg/L); therefore, this constituent would not be evaluated further if exposure to groundwater was evaluated in the HHRA. However, since MCLs are available for all constituents that would pose a risk or hazard if exposure to groundwater were evaluated quantitatively in the risk assessment, MCLs were selected as the remedial goals for the groundwater constituents and exposure to groundwater was not evaluated further. Cancer risks and noncancer hazards were calculated for each potentially or hypothetically exposed receptor included in the risk assessment. With the exception of the hypothetical future child resident exposure to surface soil and subsurface soil, all ELCR values were below the proposed target risk level of 1×10^{-5}. The exceeding pathway was the excess lifetime cancer risk (ELCR) for a hypothetical future child resident as a result of direct contact with surface soil (0-1 foot bgs) and subsurface soil (1-8 feet). All other calculated hazard indexes (HIs) and ELCRs are below the target risk level of 1×10^{-5}. The GAEPD uses a target risk level of 1×10^{-6} as the benchmark for deriving remedial goals, and although all of the calculated risks were within the USEPA target risk range of 1×10^{-4} to 1×10^{-6}, at the request of the GAEPD, remedial goals were derived for soil exposures where the individual constituent ELCR is greater than 1×10^{-6}. Remedial goals were not calculated based on noncancer effects as the HIs were all less than the benchmark of an HI equal to 1.Since SWMU 39 is within an active army base and there are no plans to change land use at SWMU 39, the use of the full target risk ranges is reasonable since these exposures are hypothetical and there are no current exposures to impacted media that pose a risk greater than 1×10^{-5}.

Ecological Risk Assessment

A preliminary risk evaluation (PRE) was conducted for SWMU 39. The storm water drainage ditch associated with SWMU 39 runs for approximately 1500 ft along the northwest portion of the fence. The water in the ditch is less than 1 foot deep with very little flow. Flow in the ditch is governed by precipitation runoff and discharge water from military vehicle washing. This ditch is typically stagnant during base-flow conditions. The cycling of dry channel conditions with precipitation and discharge-fed wet channel periods prevents establishment of a robust aquatic community typical of a perennial water body.

The PRE evaluated constituents detected in surface soil (0-1 ft bgs). Anthracene, benzo(a)pyrene, fluoranthene, phenanthrene, pyrene, and chromium were identified as

constituents of potential ecological concern (COPECs) in surface soil. Results of the PRE indicate that all calculated hazard quotients (HQs) for COPECs in soil were below 1 with the exception of the HQ for HPAHs for mammalian receptors which was only slightly above 1 (i.e., 2). Two sample locations in particular had PAHs at concentrations that exceed the EcoSSL for mammalian receptors. Those samples reflect an area that is approximately 3500 square ft (or less than 0.1 of an acre) that is currently covered by concrete and there are no redevelopment plans that will leave those areas exposed. Based on the limited number of locations with HQs >1, the small size of the area with elevated concentrations (less than 0.1 acre) which is less than the *de minimis* extent typically used in ecological risk assessments, and the fact that the area is covered and there are no plans for redevelopment, adverse impacts are unlikely to occur for ecological receptors potentially exposed in the future to PAHs in the soil. Therefore, no further ecological assessment is considered necessary.

Recommendations

The data collected during the RFI for SWMU 39, along with the evaluations and risk assessments indicate the potential impacts to the environment by past activities at the Site have been fully characterized, and delineated where necessary, in surface soil, subsurface soil, groundwater, sediment, and surface water.

Surface soil and LNAPL in the DSMF area and constituents exceeding USEPA MCLs in groundwater were identified as potential risks requiring further evaluation. The following constituents were detected above their respective MCLs in groundwater in 2011:

- Benzene
- PCE
- TCE
- DCE
- bis(2-chloroisopropyl)ether
- Total Chromium
- Total and Dissolved Lead
- Total and Dissolved Arsenic
- Total Mercury
- Vinyl Chloride

Bis(2-chloroisopropyl)ether was only detected on two occasions at a concentration approximately equal to the USEPA tap water RSL (0.00034 mg/L vs. 0.00031 mg/L). Similarly, total mercury and total chromium were only detected on two occasions. In each instance, the concentrations only slightly exceeded the MCL and the dissolved

concentration was well below the MCL or not detected above the reporting limit. Lead was detected once in dissolved form at a concentration slightly exceeding the MCL (0.017 mg/L vs. 0.015 mg/L). Consequently, Fort Stewart recommends no further evaluation for bis(2-chloroisopropyl)ether, mercury, chromium, and lead in groundwater.

Based on the results of the RFI and conclusions regarding the nature and extent of contamination, human health and ecological risk, Fort Stewart submits the following recommendations for consideration by the GAEPD:

§ The RFI has been completed, and the potential impacts to the environment by past activities at SWMU 39 have been sufficiently characterized and delineated where necessary in groundwater, surface soils, subsurface soils, sediment, and surface water.

§ Arsenic and VOCs, in particular groundwater concentrations for PCE, TCE, DCE, and Benzene in select monitor wells exceeded their respective MCL. Concurrent to the review and approval of the RFI, a Corrective Action Plan (CAP) should be prepared to evaluate potential remedial alternatives to address impacts to groundwater at SWMU 39.

§ LNAPL was detected in monitor wells G4MW001 and G4MW002. An evaluation of potential remedial alternatives to recover LNAPL near G4MW001 and G4MW002 will be included within the CAP.

§ Low level PAHs have been detected in the surface and subsurface soil near monitor wells G4MW001 and G4MW002. An evaluation of potential remedial alternatives for low level PAH detections in soil will be included within the CAP.

§ Low level metals were detected in surface water and sediment in the drainage ditch next to the DMSF. It is believed that these are related to the adjacent rail line and not associated with the activities at SWMU 39. Fort Stewart recommends no further evaluation of the surface water and sediment.

§ SWMU 39 does not present a risk to the environment in its current use nor does it present a future risk in the unlikely event the SWMU usage were to be changed. Therefore, there are no corrective actions necessary for ecological risk at SWMU 39.

1. Introduction

ARCADIS U.S. Inc. (ARCADIS) has been retained by the United States Army Environmental Command (USAEC) to perform investigation and remediation activities at Fort Stewart in accordance with the requirements of the Performance Based Contract (PBC) number W91ZLK-05-D-0015. Fort Stewart, originally known as Camp Stewart, was established in June 1940 as an anti-aircraft artillery training center. The current primary mission for Fort Stewart is a training and maneuver area, providing tank, field artillery, helicopter gunnery, and small arms training for regular Army and National Guard units. The 24th Infantry Division, which was reflagged as the 3rd Infantry Division in May 1996, was permanently stationed at Fort Stewart in 1975.

Fort Stewart is located in portions of Liberty, Bryan, Long, Tattnall, and Evans Counties, Georgia, approximately 40 miles west-southwest of Savannah, Georgia (Figure 1-1). The cantonment, or garrison area, is located within the Liberty County portion on the southern boundary of the reservation. Hinesville, Georgia is the nearest city to the garrison area and is located immediately outside of the reservation boundary.

This Resource Conservation and Recovery Act (RCRA) Facility Investigation (RFI) Report describes the soil and groundwater investigation activities at Solid Waste Management Unit (SWMU) 39 AEDR-R number CCFST039. SWMU 39 (the Site) refers to the Direct Support Maintenance Facility (DSMF) or Building 1160 as referenced in the Georgia Environmental Protection Division (GAEPD) Facility Permit #HW-045(S). For the purpose of this investigation, SWMU 39 includes the DSMF fenced area and groundwater impacts identified to the south and east of the fenced area (Figure 1-2).

1.1 Site Background

The DSMF is a fenced facility with controlled access covering approximately 10 acres. Surrounding the fenced area along the southern and eastern sides of the Site is undeveloped land covered with grass, some shrub vegetation, and pine trees. A drainage ditch runs along the south and southwest portion of the fence. Rail lines are located south and southeast of the DSMF with a spur running next to the drainage ditch along the southern side of the fence (Figure 1-2).

Historically the DSMF was used as a vehicle wash/service rack. Two former underground storage tanks (USTs), USTs 59 and 60, and their associated heating oil tanks (HOTs) were west of Building 1160, at the tracked vehicle maintenance platforms (Buildings 1161 and 1163; Figure 1-3). The HOTs provided fuel oil to a high-pressure washer at the platform.

USTs 59 and 60, were 4,000 gallon concrete USTs utilized as non-regulated flow vaults connected to an oil water separator located at the Mechanized 60 (M60) maintenance platforms. An additional 500 gallon UST (61) was located immediately southeast of the tracked vehicle maintenance platform (Building 1161) and was used for the storage of used oil. The 500 gallon used oil UST (61) was removed from the Site. The two HOTs plus the two 4,000 gallon concrete USTs (59&60) were filled with grout and closed-in-place. After the USTs and HOTs were closed, GAEPD Underground Storage Tank Management Program (USTMP) program requested investigation of the soil and groundwater to determine if a release had occurred. The investigations were initiated in 2001. A light non-aqueous phase liquid (LNAPL) believed to be waste oil was detected near Building 1161 and former UST 61. Based on the investigation results, the Site was listed as SWMU 39. Excavations were conducted in 2006 near former UST 61 and 2007 near Building 1161 to remove the LNAPL and impacted soil. In April 2008, LNAPL was detected again in an additional monitor well near Building 1161. In addition to LNAPL, historical groundwater investigations identified a diffuse volatile organic compound (VOC) plume, consisting primarily of tetrachloroethene (PCE) and trichloroethene (TCE). The reported TCE concentrations following the last investigation in April 2008 were low with a maximum detection of 27 micrograms per liter (µg/L). However, the previous investigations had not fully delineated the extent of the groundwater impacts or identified the source.

The objectives of the SWMU 39 investigations were to delineate soil and groundwater impacts, evaluate potential sediment and surface water impacts, investigate potential source areas for the impacts to groundwater, and evaluate potential risks to human health and ecological receptors. The investigation activities were conducted between March 2010 and October 2011. The following sections summarize the investigation activities and results of the data evaluations.

2. Environmental Setting

2.1 Topography

The Fort Stewart Military Reservation is located on the eastern edge of the Lower Coastal Plain physiographic province of Georgia. The topography at Fort Stewart is dominated by a series of relatively flat, Pleistocene-age marine terraces that have been dissected by recent (Holocene) surface water drainage. Four terraces have been identified within the Fort Stewart area, including the Wicomico, Penholoway, Talbot, and Pamlico (Metcalf & Eddy 1996). The terraces progressively descend in elevation in the seaward direction and are bound by steep escarpments that mark the position of ancient shorelines. The garrison area of Fort Stewart is located within the Penholoway Terrace and has an average elevation of approximately 70 feet (ft) above mean sea level (amsl).

As indicated on Figure 1-1, SWMU-39 is located in the southern portion of Fort Stewart at the approximate geographic coordinates of 31 d 51' 33" north latitude and 81d 37' 8" west longitude (United States Geologic Survey [USGS] 1976). The topography slopes gently northwest toward Mill Creek. A drainage ditch dissects the western portion of the Site. Surface water in the ditch flows northwest before emptying into Mill Creek and the Canoochee River Floodplain. The elevation ranges from approximately 85 ft amsl at the eastern boundary of SWMU-39 to approximately 70 ft amsl at the drainage ditch along the northwestern boundary.

2.2 Geology

Fort Stewart is located on the lower coastal plain physiographic province, which is typified by low relief that slopes toward the Atlantic Ocean. Sequence stratigraphy within the coastal plain geology of Georgia has been shaped by numerous cycles of marine transgressions and regressions. Previous investigations conducted in the region suggest that minor structural deformation occurred in the Savannah, Georgia area, approximately 30 miles northeast of Fort Stewart, following the deposition of sediments starting in the early Cretaceous Period. The unconsolidated sediments form a seaward thickening wedge into the Atlantic Ocean that was deposited from sediment erosion of the Blue Ridge Mountains. The total thickness of the sediments in the Savannah, Georgia, area is over 200 ft.

Published investigations have identified at least nine overlapping sets of prograding barrier island depositional sequences across the lower coastal plain . Each barrier island sequence represents the position of the former shoreline as it progressively shifted towards its current position over time. Deposited during the Pleistocene Epoch, these overlying sediments

form a disconformity with the underlying Miocene Hawthorne Group clays. Beneath the Hawthorne Group clays is the Suwannee Limestone, deposited during the Oligocene Epoch, followed by the Ocala Limestone, deposited during the Eocene Epoch.

The local geology at Fort Stewart, SWMU 39 is consistent with the barrier island depositional sequence overlying the Hawthorne Group marine clays. Historical site soil borings have only penetrated the upper 10 to 20 ft of the subsurface (SpecPro Environmental Services LLC [SES] 2008). The confining Hawthorne Group that separates the Pleistocene sediments from the Suwannee and Ocala Limestones have not been encountered at SWMU 39 in historical investigations.

2.3 Hydrogeology

The two most important aquifers in the Fort Stewart area are the Surficial Aquifer and the Floridan Aquifer. The regionally extensive Floridan Aquifer is the principal water supply aquifer in the lower coastal plain of Georgia and Florida. It is composed primarily of the Oligocene Suwannee Limestone and the Eocene Ocala Limestone. At Fort Stewart, the top of the Floridan Aquifer is approximately 500 ft below ground surface (ft bgs) (Gonthier 2011).

The investigations described herein focus solely on groundwater quality in the uppermost portion of the Surficial Aquifer system. This upper portion is underlain by two continuous clay units within the Hawthorne Group, the Coosawhatchie Formation and the Berryville Clay Member. These two clay units effectively restrict groundwater migration of shallow groundwater to the deeper Floridan Aquifer. Samples and microfossil assemblages identified within these units indicate that they were deposited during the Middle Miocene Epoch in a low energy open marine environment. This open ocean depositional environment produced the widespread and continuous nature of these clay units. A deep test well in Savannah (GGS-3139) projects that the clay units are located approximately 45 ft bgs to 167 ft bgs near Fort Stewart (Huddleston 1988). Due to the thickness and continuous nature of the confining units, there is little risk of shallow groundwater impacting deeper groundwater in the Floridan Aquifer.

2.4 Surface Water Resources

The Ogeechee River is the primary watershed for the Fort Stewart and Savannah, GA area. The Canoochee River is the largest tributary of the Ogeechee River. The watershed generally flows southeast. Numerous creeks and canals dissect the land surface throughout the Fort Stewart area.

A drainage canal traverses the western and southern boundary of the fenced area at SWMU 39. This canal is typically stagnant during base-flow conditions. Storm water runoff from the fenced area drains into the canal and flows northwest through a system of drainage canals within the southern portion of Fort Stewart. The canals channel water northwest before emptying into Mill Creek and the Canoochee River floodplain (Figure 2-1).

3. Description of RFI Activities and Removal Actions

3.1 Previous RFI Investigations

A summary of previous investigations was provided in the Final RFI and Interim Actions Report for SWMU 39, Fort Stewart, Georgia (SES 2008). A brief chronological summary of the historical investigation activities is provided below.

3.1.1 1997 UST Closure

In December 1997, field activities were conducted at 14 USTs at Fort Stewart including the two HOTs associated with USTs 59 and 60 at SWMU 39 (HAZWRAP and Earth Tech 1998), which were closed-in-place. The two HOTs were associated with the tracked vehicle maintenance platforms (Buildings 1161 and 1163) and reportedly contained heating oil to fuel high-pressure washers. No sampling was performed at the time of these field activities to determine if there had been a historical release related to the USTs and HOTs.

3.1.2 2001 and 2002 Investigations

In 2001, investigations were initiated at SWMU 39 to determine if there had been a historical release related to the USTs and HOTs. The investigations included direct push technology (DPT), installation of eight monitor wells, and groundwater sampling in the vicinity of USTs 59 and 60 and their associated HOTs. The soil sample results indicated polyaromatic hydrocarbons (PAHs) and VOCs were present. All of the concentrations were below the available soil threshold values listed in Table A of the Georgia Petroleum Threshold Levels (GAEPD 2001; STEP 2002).

During groundwater sampling, 1.21 ft of LNAPL was detected in monitor well G4MW007. Monitoring well G4MW007 is shown on Figures 1-2 and 1-3. Groundwater samples were collected from the remaining wells for VOC and PAH analysis. With the exception of TCE, all of the groundwater sample results were below the United States Environmental Protection Agency (USEPA) Maximum Contaminant Levels (MCLs).

In November 2002, an RFI was initiated to delineate the extent of TCE impacts in groundwater. The investigation included additional soil borings, installation of five monitor wells, and two discrete groundwater vertical profile borings. The soil and groundwater samples were analyzed for VOCs and semivolatile organic compounds (SVOCs). LNAPL was detected in monitor wells G4MW002 and G4MW007. Monitoring wells G4MW002 and G4MW007 are shown on Figures 1-2 and 1-3. No samples were collected from these

wells. The groundwater sample results from the remaining wells indicated TCE concentrations above the MCL. A baseline human health risk evaluation was performed using the results of the 2001 and 2002 investigations. The evaluation indicated there was not an unacceptable risk to human health due to exposure to the soil or groundwater. Based on the investigation results, Fort Stewart recommended removal of the LNAPL from G4MW007, inspection and removal of the non-regulated flow-through vessels from service, and additional investigation to delineate the extent of TCE impacts (STEP 2003).

3.1.3 2004 Investigations

In April 2004, an RFI was initiated to delineate the extent of impacts in the subsurface soil and groundwater, an interim action was performed to remove LNAPL, and a corrective measure study was conducted to determine the best remedial approach. The investigation was performed in three phases in April, August/September, and November 2004. The three phases included collection of soil, surface water, sediment, and groundwater samples, installation of twelve additional monitor wells, LNAPL removal, and isolation of the two concrete flow-through vaults and their associated oil water separator.

During the investigation, LNAPL was detected in monitor wells G4MW002, G4MW007, and G4MW013. Monitoring wells G4MW002, G4MW007, and G4MW013 are shown on Figures 1-2 and 1-3.The results of the groundwater sample analysis reported benzene, TCE, and PCE detections in select wells above MCLs. The groundwater sample results are summarized in Table 3-1. The risk assessment was revised based on the 2004 sample results. Exposure to surface water was identified as a potential risk to human health. Soil sample results are summarized in Table 3-2, surface water sample results in Table 3-3, and sediment sample results in Table 3-4. The soil sample locations are shown on Figure 3-1 and the surface water and sediment sample locations are shown on Figure 3-2.

Interim remedial actions included LNAPL recovery using multi-phase extraction and isolation of the flow–through vaults by filling them with concrete and plugging the underground pipes with fuel-resistant caulking. The isolation activities did identify a potential release pathway.

The multi-phase extraction was successful in removing all measureable LNAPL in wells G4MW002, G4MW007, and G4MW013. Prior to initiating the removal action, LNAPL was measured at 0.2 ft, 2 ft, and 0.01 ft in monitor wells G4MW002, G4MW007, and G4MW013, respectively. Following the multi-phase extraction activities, additional remedial actions were recommended, including excavation and replacement of monitor wells G4MW007 and G4MW013 along with the surrounding soils (STEP 2007).

3.1.4 2007 Interim Remedial Action

An Interim Removal Action was conducted in March and April 2007 to excavate the soils around G4MW007 and G4MW013 and replace the wells with larger diameter wells to aid in further remediation of the free product. The excavation included an area 24 ft by 14 ft surrounding the wells. Soil was removed to the water table which was approximately 8 ft deep at the time of the excavation. Following the excavation, 1000 pounds of oxygen releasing compound (ORC®) was mixed with water and applied to the excavation sidewalls and bottom. Replacement wells G4MW007R and G4MW013R were installed following backfill of the excavation. No free product has been detected in G4MW007R and G4MW0013R.

3.1.5 2008 Investigations

Following review of the 2004 RFI Report, GAEPD requested further delineation of TCE impacts in groundwater. The majority of existing monitor wells were screened from 2 to 12 ft bgs and 5 to 15 ft bgs, with the deepest well screened from 6 to 16 ft bgs. In February 2008, a DPT investigation was conducted to collect discrete groundwater samples for on-site screening using a mobile laboratory. The samples were analyzed for PCE, TCE, 1,1-dichloroethene, cis-1,2-dichloroethene (DCE), trans-1,2-dichloroethene, and vinyl chloride (VC).

Screening samples were collected from 19 locations around SWMU 39. At each sample location, groundwater samples were collected from multiple depths starting at the water table and advancing in 5 ft increments. The screening results indicated PCE and TCE to be present in groundwater above the MCL at depths up to 30 ft bgs. The highest TCE and PCE concentrations were detected in sample 1B at 18 and 23 ft bgs, respectively. Screening results are presented in Table 3-5 and shown on Figure 3-3.

Based on the DPT groundwater investigation screening results, seven additional monitor wells were installed (G4MW026 through G4MW032) in March 2008. The new wells were screened from about 10 to 20 ft bgs with one well screened from 35 to 45 ft bgs. In March and April 2008, a comprehensive gauging and sampling event was conducted using all site monitor wells.

A potentiometric surface map was prepared using the groundwater level measurements from this event and is included as Figure 3-4. The groundwater level measurements indicated the groundwater flow direction was to the west/northwest. During the monitoring event, 4 inches of LNAPL was detected in monitor well G4MW002. Consequently, no

sample was collected from this well. The estimated extent of LNAPL is shown on Figure 3-5.

The groundwater sample results are summarized in Table 3-1. The sample results indicate detections of PCE and TCE south of the DSMF fenced area (and north of Italy Street). As shown on Figure 3-6, this area was located south or side gradient to the DSMF fenced area. An RFI Work Plan was submitted for additional investigation to evaluate the source and extent of TCE and PCE groundwater impacts south of the DSMF fenced area (and north of Italy Street) and to determine how they relate to the impacts reported within the DSMF fenced area. The work plan also included additional investigations to delineate the extent of LNAPL near G4MW002 (ARCADIS 2010).

3.2 Excavation Activities at UST 61

UST 61 was removed in August 1995. Following removal, the GAEPD USTMP requested soil and groundwater investigation be conducted to determine if a release had occurred. In July 2005, during an annual groundwater monitoring event, LNAPL was discovered in monitor well 22-07. A removal action was conducted in July and August 2006 to remove monitor well 22-07 along with contaminated soil/free product around the well. Following the excavation, ORC ® was applied to the excavation floor and sidewalls and a replacement monitoring well 22-07R was installed. No additional LNAPL has been detected in replacement monitor well 22-07R.

4. Current RFI Investigation Activities

The 2008 investigations identified PCE and TCE impacts south of the DSMF fenced area (and north of Italy Street) and LNAPL in monitor well G4MW002, located within the fenced area. An RFI Work Plan was submitted to the GAEPD to delineate the PCE and TCE impacts in groundwater south and upgradient of the DSMF fenced area, investigate a potential source for the impacts, and delineate the extent of LNAPL near G4MW002 (ARCADIS 2010). The investigation was conducted in multiple field efforts. The initial field effort was conducted in March and April 2010 and included the following field activities:

§ Groundwater Investigation (March to April 2010):

- Installation of two deep and two shallow monitor wells to evaluate vertical gradients and further delineate groundwater impacts;
- Collection of water level measurements across the Site to evaluate groundwater flow direction;
- Collection of groundwater samples from 15 existing and 4 new monitor wells to evaluate the current groundwater conditions; and,
- Installation of 12 vertical aquifer profile (VAP) borings using DPT technology to delineate the PCE and TCE impacts in groundwater south and upgradient of the DSMF fenced area and evaluate potential source areas.

§ LNAPL Investigation (March 2010):

- Installation of eight soil borings to evaluate the extent of LNAPL near G4MW002.

§ Surface Water and Sediment Investigation (April 2010):

- Collection of seven surface water and eight sediment samples from the drainage ditch that parallels the southwest side of the DSMF fenced area.

§ Background Soil Samples (April 2010):

- Collection of four background soil borings within the DSMF fenced area.

A second field effort was conducted between September 2010 and January 2011 to further delineate the PCE and TCE impacts in groundwater. The field activities included:

- September to November 2010 – A soil boring was installed to confirm the sample results in one of the VAP samples collected in April 2010, membrane interface probe (MIP) soundings, and additional VAP sampling;

- November to December 2010 – Installation of 3 shallow and 8 deep monitor wells; and,

- January 2011 – Collection of water level measurements and groundwater samples from new and select existing monitor wells and performance of slug tests on select wells to determine hydraulic conductivities in the shallow aquifer.

Additional monitor wells were installed and sampled in April/May 2011 (two shallow and five deep), August 2011 (three deep), and October 2011 (one deep) to complete the delineation of PCE and TCE groundwater impacts. The investigation activities are summarized in the following subsections. Table 4-1 summarizes the monitor well construction details. The monitor well locations are shown on Figure 1-2.

All investigation derived waste (IDW) generated during the investigation activities, including DPT/drill cuttings, decontamination fluids and purge water were containerized in U. S. Department of Transportation (DOT)-approved 55-gallon drums, characterized, and transported off-site for disposal. Non-hazardous personal protective equipment (PPE), and disposable sampling materials/general refuse (e.g. Teflon® tubing, paper, plastic, aluminum foil) were placed in dumpsters at Fort Stewart.

4.1 Screening Criteria

The analytical results for each media were screened against the following standards to determine where additional delineation was required. As part of the Phase II RFI Report for 16 Solid Waste Management Units at Fort Stewart, Georgia (Science Applications International Corporation 2000), a background study was completed. Samples were collected at multiple locations around Fort Stewart to determine background concentrations of select inorganics across the Site. A copy of the study is included in Appendix A. For inorganics in soil, sample results were initially screened against the 2x the mean background sample concentrations to determine where additional delineation was required.

- Groundwater: USEPA tap water Regional Screening Level (RSL). If a tap water RSL has not been established, the USEPA MCL was used;
- Surface Soil (0 – 2 ft bgs): USEPA residential soil RSL and USEPA MCL-based Soil Screening Level (SSL). If a MCL-based SSL has not been established for a constituent, the Risk-based SSL was used;
- Subsurface Soil (> 2 ft bgs): Industrial Soil RSL and MCL-based SSL. If an MCL-based SSL has not been established for a constituent, the Risk-based SSL was used;
- Surface Water: Georgia In-stream Water Quality Standard (IWQS). If an IWQS has not been established, the USEPA tap water RSL was used; and,
- Sediment: USEPA Residential Soil RSL.

4.2 March and April 2010 Investigation Activities

The initial field effort was conducted in March and April 2010 and included the collection of groundwater, soil, surface water, and sediment samples. The investigation activities and sample results are summarized in the following sub-sections.

4.2.1 Groundwater Investigation

Four new groundwater monitor wells (designated G4MW033 through G4MW036) were installed in March 2010 using hollow stem auger drilling methods. The wells were constructed with a 2-inch diameter, 10-foot polyvinyl chloride (PVC) 0.010-inch machine-slotted screen and PVC riser. Two of the wells, G4MW033 and G4MW035, were designed to monitor the shallow Surficial Aquifer and were installed to total depths of 15 to 16 ft bgs. The remaining two wells, G4MW034 and G4MW036, were designed to monitor deeper zones within the Surficial Aquifer and were installed to total depths of 45 ft bgs. Wells G4MW034 and G4MW035 are nested to evaluate the vertical gradient between the shallow and deep groundwater and to monitor the groundwater and surface water interaction near the drainage canal. Monitor wells G4MW033 and G4MW036 were paired with existing wells to evaluate the vertical gradient between the shallow and deep groundwater. Each well was developed with an electric submersible pump and completed with a flush mount manhole and locking well seal. Well construction logs are included in Appendix B.

4.2.1.1 Groundwater Sampling

On March 9, 2010, a monitoring event including existing and new monitor wells was initiated to evaluate current groundwater quality at the Site. Prior to sampling, water level and depth-to-product measurements were collected from each well. Water and free product levels are presented in Table 4-2 and groundwater sample logs are presented in Appendix C. During water level gauging, 1.25 ft of free product was measured in G4MW001 and 1.8 ft was measured in G4MW002.

Groundwater sampling was performed using low-flow, or micropurge, procedures in accordance with USEPA Science and Ecosystem Support Division (SESD) Operating Procedure for Groundwater Sampling Number SESDPROC-301-R1 (USEPA 2007). Following the sampling event, the samples were transported via courier under chain-of-custody protocols to Shealy Environmental Services, Inc. (Shealy) (National Environmental Laboratory Accreditation Conference [NELAC] No. E87653) in West Columbia, South Carolina. Samples were analyzed for VOCs by USEPA Method 8260B. Copies of the laboratory analytical reports are included in Appendix D and analytical results are summarized in Table 4-3. Monitor well locations are shown on Figure 1-2.

Consistent with historical sample events, low level VOCs were detected in various wells during the March 2010 baseline investigation. As discussed in Section 4.1, the sample results were screened against the USEPA tapwater RSLs or USEPA MCLs. Concentrations in select wells exceeded the RSLs for TCE and VC.

- TCE was detected above the RSL of 0.44 µg/L in ten of the fifteen wells at concentrations ranging from 1.4 µg/L to 23 µg/L; and,

- VC was detected above the RSL of 0.015 µg/L in G4MW020 at an estimated concentration of 0.23 µg/L.

The concentrations detected were consistent with the levels detected in 2004 and 2008. Monitor wells G4MW033 and G4MW035 indicate that there may be minor discharge from groundwater into the drainage ditch; however, water observed in the ditch may also derive from run-off from the DSMF. During ARCADIS site visits, soap has been observed in the drainage ditch water. It is believed that the soap is a result of vehicle cleaning operations at the DSMF.

4.2.1.2 Vertical Aquifer Profiling

Further delineation of PCE and TCE in groundwater south and upgradient of the fenced DSMF was conducted in March and April, 2010. ARCADIS coordinated with ARM Environmental Services to provide DPT services. Soil cores and groundwater samples were collected from 12 locations (designated F39TW01 through F39TW12). The boring locations are shown on Figure 4-1. As detailed in the work plan, continuous DPT soil borings were advanced at each location and VAP groundwater sampling was performed to 45 ft bgs. Recovered soil cores were documented by a qualified geologist and screened for volatile constituents with a calibrated photoionization detector (PID). VAP samples were collected using DPT in accordance with SESD Operating Procedure SESDPROC-301-R1 (USEPA 2007). A 4-foot long screen sampler point protected by the leading end of the steel drive rod was advanced until the specified sampling interval was reached. When the targeted VAP sampling depth was reached, the drive rod tool string was retracted 4 ft, exposing the stainless-steel screen to the formation and allowing water to enter the screened section and the rods. Groundwater samples were extracted using the DPT sampling technique by lowering a section of polyethylene tubing into the middle of the exposed screen. The upper portion of the tubing was connected to a peristaltic pump used to extract the groundwater. VAP samples were collected from total depths of 15, 25, 35, and 45 ft bgs. Groundwater samples were submitted under chain-of-custody to Shealy (NELAC No. E87653), for analysis of VOCs by USEPA Method 8260B and SVOCs by USEPA Method 8270D. Copies of the laboratory analytical reports are included in Appendix D and the analytical results are summarized in Table 4-4. Field parameters including temperature, specific conductance, pH, oxidation-reduction potential (ORP), and dissolved oxygen (DO) were measured using a calibrated field multi-parameter meter and recorded for each location and depth interval. Field parameters are presented in Table 4-5.

Analytical data for the March-April 2010 DPT/VAP borings which exceeded USEPA tapwater RSLs are summarized below:

- Low level VOCs were detected in all of the borings with exceedances of the tap water RSLs in select borings for benzene, PCE, TCE, and DCE.

- Benzene was detected above the tap water RSL of 0.39 µg/L in 8 of the 12 boring locations with concentrations ranging from 0.4 µg/L to 2.2 µg/L. All of the sample results were below the MCL of 5 µg/L.

- PCE was detected above the tap water RSL of 9.7 µg/L and MCL of 5 µg/L in 7 of the 12 boring locations with concentrations ranging from 5.2 µg/L to 140 µg/L.

- TCE was detected above the tap water RSL of 0.44 µg/L and MCL of 5 µg/L in 11 of the 12 boring locations with concentrations ranging from 0.76 µg/L to 1,300 µg/L.

- DCE was detected in F39TW11 in the 40 to 45 ft bgs depth interval at a concentration of 450 µg/L, which exceeds the tap water RSL of 28 µg/L and MCL of 70 µg/L. The DCE concentration in F39TW11 is an order of magnitude greater than the concentration detected at any other location. The highest PCE and TCE concentrations were also detected at this location and depth and were also one to two orders of magnitude greater than the concentrations detected in any other boring.

- Isolated low level SVOCs were detected in several of the borings well below the tap water RSLs and MCLs.

Similar to historical investigations, the results of the March-April 2010 investigation confirmed the presence of a diffuse low level VOC plume across SWMU 39 and upgradient areas consisting primarily of PCE and TCE. Higher VOC concentrations were detected in F39TW11 within the 30 to 45 ft bgs depth interval.

4.2.2 LNAPL Investigation

In March 2010, eight soil samples identified as F39SB001 through F39SB008 were collected to delineate LNAPL impacts near G4MW002. Sampling logs are included in Appendix E. Surface soil samples are presented on Figure 4-2 and subsurface samples are presented on Figure 4-3. ARCADIS coordinated with ARM Environmental Services to install the soil borings to investigate the distribution of LNAPL. Eight continuous soil borings were advanced to a maximum depth of six ft bgs using a DPT rig. Recovered soil cores were logged by a qualified geologist and screened with a calibrated PID. Oil Red O stain was used to field screen soil cores with PID readings greater than 100 ppm or indications of potential free product (odor, visible staining, etc.) for the presence of oils or free product. One soil sample was collected from each boring location from a depth interval of approximately four to five ft. Soil samples were submitted under chain-of-custody to Shealy (NELAC No. E87653), for analysis of VOCs by USEPA Method 8260B, SVOCs by USEPA Method 8270D, mercury by USEPA Method 7471B, and metals by USEPA Method 6010C. Copies of laboratory analytical reports are included in Appendix D and analytical results are summarized in Table 4-6. Following the completion of the DPT investigation, boreholes were abandoned with Portland cement grout.

LNAPL impacts were not identified in the borings collected near G4MW002. One soil sample was collected from each boring at approximately 4 to 5 ft bgs. With the exception of

F39SB007, the sample results were below the industrial soil RSL and SSL. F39SB007 slightly exceeded the risk based SSL for benzo(a)anthracene and benzo(b)fluoranthene with concentrations of 0.059 milligrams per kilogram (mg/kg) and 0.097 mg/kg respectively.

4.2.3 Background Soil Investigation

Background soil borings were also collected around buildings 1161 and 1163 outside of the known impacted areas. Four DPT soil borings, identified as F39SB009 through F39SB0012, were advanced to a total depth of 6 ft bgs. Recovered soil cores were logged by a qualified geologist and screened with a calibrated PID. Soil samples were collected from each boring location at depths of 0.5 to 1.0 ft bgs and 3.0 to 3.5 ft bgs. Soil samples were submitted under chain-of-custody to Shealy (NELAC No. E87653) for analysis of VOCs by USEPA Method 8260B, SVOCs by USEPA Method 8270D, mercury by USEPA Method 7471B, and metals by USEPA Method 6010C. Copies of laboratory analytical reports are included in Appendix D and the soil analytical results are summarized in Table 4-6. Following the completion of the DPT investigation, boreholes were abandoned with Portland cement grout.

Low level PAHs were detected in F39SB010 above the RSL and SSL. Benzo(a) anthracene, benzo(a)pyrene, benzo(b)fluoranthene, and indeno(1,2,3-cd)pyrene were detected above the residential soil RSL and benzo(k)fluoranthene was detected above the risk based SSL in the surface soil sample collected from 0.5 to 1 ft bgs at F39SB010. The subsurface soil sample collected at the same location from 3 to 3.5 ft bgs showed decreasing concentrations with depth and only slight exceedances of the risk based SSL for benzo(a)anthracene and benzo(b)fluoranthene.

Several metals were detected in the surface soil and subsurface soil samples at concentrations similar to background levels. Lead was detected in the surface soil sample collected at F39SB009 at a concentration of 43 mg/kg above the background concentration of 8.81 mg/kg and the MCL based SSL of 14 mg/kg. The subsurface soil sample collected at the same location from 3 to 3.5 ft bgs was below the background value at a concentration of 5.4 mg/kg.

4.2.4 April 2010 Surface Water and Sediment Investigation

In April 2010 ARCADIS performed a surface water and sediment investigation at the drainage canal that parallels the southwest fence line of the DSMF area. In accordance with the RFI Work Plan (ARCADIS 2010), surface water and sediment samples were collected from eight locations in the drainage canal, as presented in Figure 4-4. Field parameters

including temperature, specific conductance, pH, DO, and ORP were measured with a calibrated multi-parameter meter and recorded. Surface water flow was also measured at each location with a Marsh-McBirney flow meter. Field measurements are presented in Table 4-7. Sediment and surface water samples from each of the eight locations were submitted under chain of custody to Shealy (NELAC No. E87653) for analysis of VOCs by USEPA Method 8260B, SVOCs by USEPA Method 8270D, mercury by USEPA Method 7470A/7471B and metals by USEPA Method 6010C. A surface water sample was not collected from SW-08 because the location was dry. Analytical data for surface water samples and sediment samples are presented in Table 4-8 and Table 4-9, respectively.

4.2.4.1 Surface Water

The surface water sample results are presented in Table 4-8. Figure 4-4 displays the surface water sample locations along the drainage ditch. The results of the 2010 investigation are summarized below:

- Sample location F39SW-08 was dry at the time of sampling so a surface water sample was not collected at this location.
- Low level VOC and SVOC detections were reported in the surface water samples below the IWQS or tap water RSL, where no IWQS is established.
- Lead was detected above the IWQS of 1.2 µg/L in all of the surface water samples with estimated concentrations ranging from 3.1 to 9.2 µg/L.
- Mercury was detected above the IWQS of 0.012 µg/L in F39SW-05 with an estimated concentration of 0.084 µg/L.

4.2.4.2 Sediment

The sediment sample results are presented in Table 4-9. Figure 4-4 displays the sediment sample locations along the drainage ditch. The results of the 2010 investigation are summarized below:

- Low level VOC and SVOC detections were reported in the sediment samples below the residential soil RSL.

- Arsenic was detected above the RSL of 0.39 mg/kg in all the sediment samples with concentrations ranging from 0.5 mg/kg to 17 mg/kg. The highest arsenic concentration was present in the sample collected adjacent to a rail spur.

4.2.4.3 Summary of Surface Water and Sediment Investigation

Low level VOCs and SVOCs were detected in surface water below the screening criteria. Soap suds have been observed in the drainage ditch. It is believed that the soap is a result of vehicle cleaning operations at the DSMF. Lead and mercury in surface water and arsenic in sediment have been reported above the screening criteria.

4.3 September 2010 through January 2011 Investigation Activities

4.3.1 September 2010 Confirmation Event

In September 2010, a confirmation soil boring was collected to confirm and vertically delineate the elevated PCE, TCE, and DCE concentrations detected between 40 and 45 ft bgs in VAP boring F39TW11. ARCADIS coordinated with ARM Environmental Services to provide DPT services. An additional soil boring (designated F39TW13) was advanced in the vicinity of F39TW11 using a DPT rig. Continuous soil cores were recovered from ground surface to a total depth of 70 ft bgs. Soil cores were logged by a qualified geologist and screened for VOCs using a calibrated PID. Saturated soil samples were collected at two-foot intervals from 30 ft bgs to 70 ft bgs to evaluate if saturated soil samples could be collected in future events for well screening purposes rather than VAP sample collection. Samples were submitted under chain-of-custody to Shealy (NELAC No. E87653), for analysis of VOCs by USEPA Method 8260B. Analytical results are summarized in Table 4-10 and the sample location is shown on Figure 4-1. The borehole was abandoned with Portland cement grout.

In addition to the saturated soil samples, VAP samples were collected at five-foot intervals from 30 ft bgs to 70 ft bgs using the same method utilized during the March/April 2010 groundwater investigation. A 4-foot long screen sampler point protected by the leading end of the steel drive rod was driven into the ground and advanced until the specified sampling interval was reached. When the targeted VAP sampling depth was reached, the drive rod tool string was retracted 4 ft, exposing the stainless-steel screen to the formation and allowing water to enter the screened section and the rods. Groundwater samples were extracted using the DPT sampling technique by lowering a section of polyethylene tubing

into the middle of the exposed screen. The upper portion of the tubing was connected to a peristaltic pump used to extract the groundwater. Groundwater samples were not collected from the 55-60, 60-65, and 65-70 ft bgs depth intervals because the formation did not produce sufficient water to collect a sample. Groundwater samples were submitted under chain-of-custody to Shealy (NELAC No. E87653) for analysis of VOCs by USEPA Method 8260B. Following sample collection, the boreholes were abandoned with Portland cement grout.

The F39TW13 VAP sample results indicated concentrations of PCE, TCE, DCE, and benzene above the screening criteria.

- PCE was detected at depth interval 35 to 40 ft bgs above the tap water RSL of 9.7 µg/L at a concentration of 210 µg/L.

- TCE was detected in 5 of the 6 samples above the tap water RSL of 0.44 µg/L with concentrations ranging from 0.46 µg/L to 1,200 µg/L with the highest concentration detected in the 35 to 40 ft bgs depth interval.

- DCE was detected above the tap water RSL of 28 µg/L in 3 of the 6 samples at concentrations ranging from 76 µg/L to 320 µg/L with the highest concentration detected in the 35 to 40 ft bgs depth interval.

- Low levels of benzene were detected in 3 of the 6 samples slightly above the tap water RSL of 0.39 µg/L with concentrations ranging from 0.42 µg/L to 0.53 µg/L.

The highest detected sample results for PCE, TCE, and DCE were reported in the 35 to 40 ft bgs depth interval and were one to two orders of magnitude higher than the concentrations detected in the other samples. The sample results indicate the concentrations decrease quickly with depth, with all reported concentrations below the tap water RSL in the 50 to 55 ft bgs depth interval. In addition, the concentrations detected in F39TW13 at the 35 to 40 ft bgs depth interval were similar to the concentrations detected in F39TW11 at the 40 to 45 ft bgs depth interval confirming the sample results from March/April 2010. Analytical results are summarized in Table 4-4 and the sample location is shown on Figure 4-1.

There was no correlation between the saturated soil sample results and the VAP sample results. Consequently, further investigations were conducted using the VAP sample method.

4.3.2 October 2010 MIP/VAP Investigation

To delineate the impacts detected in F39TW11 and F39TW13, a combined MIP/VAP investigation was conducted in October 2010. The objective of the investigation was to collect additional groundwater and geologic data to delineate the VOC impacts in deep groundwater and to evaluate potential locations for permanent monitor wells. Investigation activities included the use of MIP, and VAP sampling techniques. At all locations where MIP or VAP sampling was conducted, the first five ft was cleared for utilities using a decontaminated stainless steel hand auger.

4.3.2.1 MIP Investigation

The MIP is a tool that provides near real-time data on the distribution of VOCs with depth. Using a DPT rig, the MIP tool is advanced through the subsurface. On the MIP, a semi-permeable membrane is heated, promoting diffusion of VOCs across the membrane and into an inert carrier gas that travels to up-hole gas-phase detectors. The MIP tool has three gas-phase detectors: a PID, a flame-ionization detector (FID), and an electron capture detector (ECD). Each gas-phase detector responds differently to the presence of VOCs; however, all of the detectors are non-specific to individual compounds and provide qualitative, screening-level data only. VAP groundwater sampling was used to identify the VOC constituents and quantify their concentrations. Additionally, the MIP tool used at the Site contained an electric conductivity (EC) sensor to provide basic data on the aquifer stratigraphy (silts and clays have higher electrical conductivity relative to sands and gravels).

A DPT rig, operated by ARM Environmental Services and S2C2 Inc. of Raritan, New Jersey, was used to collect MIP soundings. A total of nine MIP soundings were completed at the Site (F39A01, F39B02 through F39B06, and F39D24 through F39D26). The MIP tooling was advanced into the subsurface to a maximum depth of approximately 50 ft bgs (the goal of the MIP investigation was to delineate the elevated chlorinated VOCs at F39TW13 and F39TW11, which did not have elevated chlorinated VOC concentrations deeper than approximately 45 ft bgs). MIP logging activities were conducted in accordance with American Society for Testing and Materials (ASTM) D7352-07 Standard Practice for DPT for Volatile Contaminant Logging with the MIP. The MIP response logs generated during this investigation are provided in Appendix F.

4.3.2.2 VAP Investigation

MIP results were used to estimate the distribution of elevated VOCs in the vicinity of F39TW11 and F39TW13. VAP samples were then collected at nominal 6-foot depth intervals from approximately 35 to 45 ft using DPT to quantify VOC concentrations at locations and depth intervals where a MIP response was observed. Although the original intent was for the VAP samples to provide confirmation of the MIP response, the MIP rig experienced equipment problems trying to advance through the hard soils at the Site and was unable to be used for the full duration of the investigation. Consequently, the number of VAP samples collected was increased and a field kit (discussed below) was used to screen for intervals with elevated total VOCs.

A total of 43 groundwater VAP samples were collected from 16 locations (F39B02, F39B05, F39B06, F39C12, F39C14, F39D23, F39D25 through F39D28, F39D30, and F39E07 through F39E11) in November, 2010, as shown on Figure 4-5. During advancement of boring E-11 near the southern corner of Building 1065, a concrete utility pipe was detected at approximately 9.5 ft bgs. Following discovery of the pipe, informal conversations with site personal revealed that spent solvents from a former electronic repair shop may have been disposed of in the sewer lines near Building 1065.

VAP samples were collected using a DPT rig and peristaltic pump via the same method used during the March-April 2010 Groundwater Investigation. After collection, the VAP groundwater samples were field screened for elevated chlorinated VOCs using the AQR Color-Tec method. The AQR Color-Tec method uses colorimetric gas detector tubes to detect chlorinated VOCs. In accordance with the AQR Color-Tec method, the sample was heated and a vacuum was used to draw volatized organic constituents through a colorimetric tube that produces a distinct color change when exposed to chlorinated compounds. Sample concentrations were estimated by comparing the colorimetric tube readings to a conversion table (that was created by comparing AQR Color-Tec and Gas Chromatograph/Mass Spectrometer [GC/MS] split sample data). The colorimetric tubes react to all chlorinated volatile organic halocarbons and the total response indicated by the detector tube reflects the sum of the concentrations of each individual chlorinated compound present in the sample.

Since the AQR Color-Tec method is a screening-level approach and does not differentiate individual chlorinated VOCs, duplicate groundwater samples were also submitted under chain-of-custody to Shealy (NELAC No. E87653) for analysis of VOCs by USEPA Method 8260B. Analytical data is summarized in Table 4-11.

4.3.2.3 October 2010 MIP/VAP Investigation Results

The October 2010 MIP investigation provided additional useful information on the elevated PCE and TCE concentrations detected in the area surrounding F39TW11. To improve data resolution in this area, the November 2010 DPT/VAP borings (F39B02, F39B05, F39B06, F39C12, F39C14, F39D23, F39D25 through F39D28, F39D30, and F39E07 through F39E11) were advanced as deep as 46 ft bgs. Analytical data is summarized in Table 4-11 and the boring locations are shown on Figure 4-5. The sample results indicated:

- PCE was detected above the RSL of 9.7 µg/L in 8 of the 16 borings. The highest detection of PCE was in boring F39D26 at a concentration of 260 µg/L. Boring F39D26 is located downgradient of F39TW11 and F39TW13.

- TCE was detected above the RSL of 0.44 µg/L in 14 of the 16 borings. The highest detection of TCE was in boring F39D25 at a concentration of 1,300 µg/L. Boring F39D25 is located downgradient of F39D26, F39TW11, and F39TW12.

- DCE was detected above the RSL of 28 µg/L in 3 of the 16 borings, with the highest detection in boring F39D25 at a concentration of 380 µg/L.

- VC was detected above the RSL of 0.015 µg/L in boring F39D25 at a concentration of 0.81 µg/L.

- Benzene was detected above the RSL of 0.39 µg/L in 10 of the 16 borings, with the highest detection in boring F39E09 at a concentration of 2.1 µg/L.

- Chloroform was detected above the RSL of 0.19 µg/L in boring F39E08 at a concentration of 0.37 µg/L.

- 1,1-Dichloroethane was detected above the RSL of 2.4 µg/L in boring F39D30 at a maximum concentration of 25 µg/L.

The MIP/VAP investigation provided additional data to delineate the PCE and TCE impacts in the deeper groundwater. The highest impacts were reported in the area of F39TW11 / F39TW13 and immediately downgradient in borings F39D26 and F39D25 with lower level impacts to the north and south of this area.

4.3.2.4 November and December 2010 Monitor Well Installations

Data obtained from groundwater investigations conducted from 2004 through 2010 were used to evaluate permanent groundwater monitor wells locations, designed to delineate and monitor VOCs in the shallow and deep zones of the Surficial Aquifer across SWMU 39. To monitor groundwater quality at the Site, 3 new shallow and 8 new deep groundwater monitor wells (designated G4MW037 through G4MW047) were installed between November and December 2010. ARCADIS coordinated with ARM Environmental Services and GeoLab to provide well installation services. Each well was installed using hollow stem auger drilling methods and was constructed with a two-inch diameter, ten-foot pre-pack PVC 0.010-inch machine-slotted screen and PVC riser. Total depths of the new wells ranged from 14.5 to 45 ft bgs. Each well was developed with an electric submersible pump and completed with a flush mount manhole and locking well seal. Well construction logs are included in Appendix B.

4.3.2.5 January 2011 Slug Testing

Slug tests were conducted at five monitor wells in order to better understand the hydraulic conductivity of the aquifer. The selected monitor wells are geographically spaced across the Site and screened across both the shallower and deeper portions of the aquifer. Following the collection of an initial static water level, a pressure transducer was deployed in each well. A solid, 54 inch long by 1 $^{5}/_{8}$ inch diameter PVC slug was lowered below the water table. Once the water level returned to the static level, the slug was quickly removed and the water level recovery was recorded by the transducer. All data were downloaded from the transducer and emailed to the project team at the end of each day for analysis. Slug test analyses were completed using AQTESOLV Professional, developed by HydroSOLVE, Inc. Logs generated from the slug test results using AQTESOLV Professional are presented in Appendix F.

The slug test analysis calculated hydraulic conductivity values that ranged from 10^{-3} to 10^{-5} centimeters per second (cm/sec):

- G4MW038 – 6.6×10^{-5} cm/sec – 35 ft bgs to 45 ft bgs
- G4MW040 – 1.6×10^{-4} cm/sec – 35 ft bgs to 45 ft bgs
- G4MW042 – 1.5×10^{-4} cm/sec – 35 ft bgs to 45 ft bgs
- G4MW043 – 1.1×10^{-3} cm/sec – 14 ft bgs to 24 ft bgs

§ G4MW047 – 3.5×10^{-5} cm/sec – 25 ft bgs to 35 ft bgs

The slug test results are consistent with the typical hydraulic conductivity range (10^{-2} to 10^{-5} cm/sec) for silty sand (Freeze and Cherry 1979).

4.3.2.6 January 2011 Groundwater Monitoring

Following the installation and development of the 11 new monitor wells, a site-wide groundwater monitoring event was conducted between January 25 and 28, 2011. Water level and depth-to product measurements were collected from 48 groundwater monitor wells. Water and free product levels are presented in Table 4-12 and field measurements are presented in Table 4-13. During the gauging event, 0.77 ft of free product was detected in G4MW001 and 2.42 ft of free product was detected in G4MW002.

A total of 35 monitor wells were purged and sampled for VOCs in accordance with SESD Operating Procedure for Groundwater Sampling Number SESDPROC-301-R1 (USEPA 2007). Groundwater samples were submitted under chain-of-custody to Shealy (NELAC No. E87653) for analysis of VOCs by USEPA Method 8260B, SVOCs by USEPA Method 8270D, mercury by USEPA Method 7471B, and metals by USEPA Method 6010C. The groundwater sampling logs are presented in Appendix C.

Consistent with historical sampling events, low level VOCs, particularly PCE and TCE, were detected across the Site. The highest detections were in new monitor well, G4MW041, with PCE and TCE concentrations of 290 µg/L and 550 µg/L, respectively. DCE was also detected in this well at 97 µg/L. Monitor well G4MW041 was installed in the same area as VAP boring F39TW011.

Benzene and chloroform were also detected above the tap water RSLs. Benzene was detected above the tap water RSL of 0.39 µg/L in monitor well G4MW035, at a concentration of 16 µg/L and G4MW037, at a concentration of 2.1 µg/L. Chloroform was detected above the tap water RSL of 0.19 µg/L in monitor well G4MW046, at a concentration of 0.55J µg/L and G4MW047, at a concentration of 1.1 µg/L.

Several metals were detected above the tap water RSL and/or the MCL. Total arsenic, total chromium, total lead and total mercury were detected above the tap water RSL in multiple wells. Mercury and chromium were not detected above their respective tap water RSL or MCL in the dissolved samples. Dissolved arsenic was detected above the tap water RSL of 0.000045 milligrams per liter (mg/L) in 7 of the 35 samples at concentrations ranging from 0.004 mg/L to 0.012 mg/L. Dissolved lead was detected in monitor well

G4MW029 slightly above the MCL of 0.015 mg/L at a concentration of 0.017 mg/L. A summary of the groundwater analytical data is presented in Table 4-14. Chlorinated VOCs exceeding the screening criteria in shallow wells are shown on Figure 4-6 and in deep wells on Figure 4-7. TCE exceeding the screening criteria in the deep zone are shown on Figrue 4-8. SVOCs exceeding the screening criteria in deep wells are shown on Figure 4-9. No SVOCs exceeded the screening criteria in the shallow wells. Dissolved arsenic and lead sample results exceeding the screening criteria in shallow wells are shown on Figure 4-10 and in deep wells on Figure 4-11. Copies of the laboratory analytical reports are included in Appendix D.

4.4 April and May 2011 Investigation Activities

4.4.1 April-May 2011 Groundwater Monitoring

Based on the results of the January 2011 monitoring event, two shallow and five deep monitor wells (designated G4MW048 through G4MW054) were installed between April and May 2011 to further delineate and monitor VOCs in the shallow and deep Surficial Aquifer across SWMU 39. ARCADIS coordinated with ARM Environmental Services and GeoLab to provide well installation services. Each well was installed using hollow stem auger drilling methods and was constructed with a two-inch diameter, ten-foot pre-pack PVC 0.010-inch machine-slotted screen and PVC riser. Total depths of the new wells ranged from 7.5 to 60.5 ft bgs. Each well was developed with an electric submersible pump and completed with a flush mount manhole and locking well seal. Well construction logs are presented in Appendix B.

In May 2011, water level and depth-to product measurements were collected from 54 groundwater monitor wells, including the newly installed wells. Water and free product levels are presented in Table 4-15. Consistent with historical gauging events, 0.65 ft of free product was detected in G4MW001 and 3.26 ft was detected in G4MW002. Shallow and Deep potentiometric surface maps are included as Figure 4-12 and 4-13 respectively. Similar to previous gauging events, the predominant groundwater flow direction in both the shallow and deep groundwater is to the northwest.

Following development, groundwater samples were collected from the seven new wells. Groundwater samples were submitted under chain-of-custody to Shealy (NELAC No. E87653), for analysis of VOCs by USEPA Method 8260B, SVOCs by USEPA Method 8270D, mercury by USEPA Method 7471B, and metals by USEPA Method 6010C. Analytical results are presented in Table 4-16. The shallow monitor well locations are

shown on Figure 4-6 and the deep monitor well locations are shown on Figure 4-7. Groundwater sampling logs are presented in Appendix C.

Monitor wells G4MW048 and G4MW049 were installed as a paired shallow and deep well side gradient of paired wells G4MW046 and G4MW047 to further delineate PCE and TCE impacts in the shallow and deep groundwater. PCE and TCE were not detected in monitor wells G4MW048 and G4MW049. VC was reported in G4MW048 above the tap water RSL of 0.015 µg/L at an estimated concentration of 0.56 µg/L. VC was not detected in G4MW046, G4MW047, or G4MW049. Several total metals were detected in G4MW048 above the tap water RSLs and MCLs. However, the dissolved concentrations were below the screening criteria.

Deep monitor well G4MW050 was installed side gradient to G4MW037 to delineate benzene concentrations in the deep groundwater. Benzene was below detection limits in G4MW050. Dissolved arsenic was detected in G4MW050 above the tap water RSL of 0.000045 mg/L at an estimated concentration of 0.009 mg/L.

Deep monitor well G4MW051 was installed to vertically delineate PCE, TCE and DCE impacts in monitor well G4MW041. PCE was detected below the tap water RSL of 9.7 µg/L at a concentration of 2.2 µg/L. TCE and DCE were both detected above their respective tap water RSLs at concentrations of 380 µg/L and 260 µg/L respectively. Dissolved arsenic was detected in G4MW051 above the tap water RSL of 0.000045 mg/L at an estimated concentration of 0.0098 mg/L.

Deep monitor well G4MW052 was installed to delineate impacts north of G4MW041. TCE was detected in G4MW052 above the tap water RSL of 0.44 µg/L at a concentration of 5.3 µg/L. Bis(2-chloroisopropyl) ether was also detected above the tap water RSL of 0.31 µg/L at an estimated concentration of 0.34 µg/L. Bis(2-chloroisopropyl) ether was not identified as a site constituent during previous monitoring events. Dissolved arsenic was detected in G4MW052 above the tap water RSL of 0.000045 mg/L at an estimated concentration of 0.0042 mg/L.

Deep monitor well G4MW053 was installed to delineate downgradient impacts in the deep groundwater. PCE, TCE, and DCE were below detection limits in G4MW053. Dissolved arsenic was detected above the tap water RSL of 0.000045 mg/L at a concentration of 0.024 mg/L.

Shallow monitor well G4MW054 was installed to delineate downgradient impacts of G4MW022. PCE, TCE, and DCE were below detection limits in G4MW054. Dissolved

arsenic was detected above the tap water RSL of 0.000045 mg/L at an estimated concentration of 0.0047 mg/L.

It is important to note that arsenic was detected in an associated blank with the samples collected in May 2011. Consequently, all of the sample concentrations are qualified as estimated.

4.4.2 April-May 2011 Soil Sampling

Additional soil samples were collected between April and May 2011 to delineate the PAH impacts detected in F39SB010. Soil samples F39SB013, F39SB014, and G4MW053 were collected in April 2011 and F39SB015 through F39SB017 were collected in May 2011. ARCADIS coordinated with ARM Environmental Services to install the soil borings. Soil borings were advanced to a total depth of six ft bgs using a DPT rig. Recovered soil cores were logged by a qualified geologist and screened with a calibrated PID. Samples were collected from each boring location from depth intervals of approximately 0.5 to 1.0 ft bgs and 3.0 to 3.5 ft bgs. Soil samples were submitted under chain-of-custody to Shealy (NELAC No. E87653), for analysis of SVOCs by USEPA Method 8270D. Boreholes were abandoned with Portland cement grout.

Soil samples F39SB013, F39SB014, and G4MW053 were initially collected to delineate PAHs in F39SB010. All concentrations were below detection limits in G4MW053. Multiple PAHs were detected in F39SB013 and F39SB014 above the residential soil RSL and/or SSL in the 0.5 to 1 ft bgs samples and above the industrial soil RSL and SSLs in the 3 to 3.5 ft bgs samples. Soil sample F39SB015 was installed to further delineate PAH impacts to the east of F39SB014 and soil samples F39SB016 and F39SB017 were installed to further delineate PAH impacts to the west of F39SB013. Multiple PAHs were detected in the F39SB017 surface and subsurface soil sample above the SSLs. Benzo(a)pyrene was also detected above the residential soil RSL in the surface soil sample and above the industrial soil RSL in the subsurface soil sample. 4-Chlorobenzenamine, which had not been detected in any of the other samples collected, was detected in both the F39SB015 surface and subsurface soil sample above the SSL of 0.00013 mg/kg at concentrations of 0.068 mg/kg and 0.023 mg/kg respectively. 4-Chlorobenzenamine was also detected in the surface soil sample F39SB016 at a concentration of 0.015 mg/kg. No detections were reported in the subsurface soil sample for F39SB016. Analytical data is presented in Table 4-6. Surface soil samples are presented on Figure 4-2 and subsurface samples are presented on Figure 4-3.

4.5 August 2011 Investigation Activities

During August 2011, three deep monitor wells (designated G4MW055 through G4MW057) were installed to further delineate and monitor VOCs in the Surficial Aquifer across SWMU 39. ARCADIS coordinated with AE Drilling Services, Inc., to install the new wells. Monitor well G4MW055 was installed using mud rotary drilling methods and was constructed with a two-inch diameter, ten-foot pre-pack PVC 0.010-inch machine-slotted screen and PVC riser. Monitor wells G4MW056 and G4MW057 were installed using hollow stem auger drilling methods and were constructed with two-inch diameter, ten-foot pre-pack PVC 0.010-inch machine-slotted screens and PVC risers. Total depths of the new wells ranged from 43.6 to 98.0 ft bgs. Each well was developed with an electric submersible pump and completed with a flush mount manhole and locking well seal. Well construction logs are located in Appendix B.

Following development, all of the new wells were sampled. Groundwater samples were submitted under chain-of-custody to Shealy (NELAC No. E87653),for analysis of VOCs by USEPA Method 8260B. Water level and depth-to product measurements (if present) were collected from the newly installed wells. Water and free product levels are presented in Table 4-17 and groundwater sampling logs are presented in Appendix C. Analytical results are summarized in Table 4-18. The monitor well locations are shown on Figure 4-7.

Deep monitor well G4MW055 was installed to vertically delineate the impacts to G4MW051. TCE was detected slightly above the tap water RSL of 0.44 µg/L, at an estimated concentration of 0.54 µg/L. Chloroform was also detected above the tap water RSL of 0.19 µg/L at an estimated concentration of 0.72 µg/L.

Deep monitor well G4MW056 was installed to delineate impacts to the east of G4MW052. TCE was detected in G4MW054 above the MCL at a concentration of 21 µg/L.

Deep monitor well G4MW057 was installed at the request of GAEPD to provide a refinement of groundwater quality in the deep groundwater within the center of the plume. PCE and TCE were detected above MCLs at concentrations of 7.1 µg/L and 16 µg/L, respectively.

4.6 October 2011 Investigation Results

To further delineate groundwater concentrations to the east of G4MW056, deep monitor well G4MW058 was installed in October 2011. ARCADIS coordinated with AE Drilling Services, Inc. to install the new well. Monitor well G4MW058 was installed using mud

rotary drilling methods and was constructed with a two-inch diameter, ten-foot pre-pack PVC 0.010-inch machine-slotted screen and PVC riser. The total depth of the new well is 36 to 46 ft bgs. The well was developed with an electric submersible pump and completed with a flush mount manhole and locking well seal. The well construction log is located in Appendix C.

Following development, G4MW058 was gauged and sampled. The groundwater sample was submitted under chain-of custody to Shealy (NELAC No. E87653), for analysis of VOCs by USEPA Method 8260B. The water level is presented in Table 4-17 and groundwater sampling logs are presented in Appendix B. Analytical results are summarized in Table 4-19. The monitor well location is shown on Figure 4-7. All of the sample results were below tap water RSLs.

5. Conceptual Site Model

Data collected during the current (2010-2011) RFI activities have resulted in refinements to the conceptual site model (CSM) as well as delineation of the impacts in groundwater. The key elements of the CSM are described in the following sections and are based on detailed geologic logging, MIP/EC soundings, soil samples from various depths, and collection of numerous groundwater samples.

5.1 Setting

SWMU 39 is located near the intersection of Sigma Street and Alexander Stevens Road in the southwest portion of the Fort Stewart Garrison Area near Building 1160 (DSMF). A section of SWMU 39 is surrounded by a fence with controlled access. The area within the fence is almost entirely covered with concrete. Outside the fence, along the southern and eastern sides of the Site, is undeveloped and covered with grass and some shrub vegetation and pine trees. A drainage ditch runs along the south and southwest portion of the fence. The ditch is around 3 ft wide and varies in depth from approximately 3 to 7 ft, with the depth increasing as it travels to the northwest. The water in the ditch is less than one foot deep with very little flow. Rail lines are located south and southeast of the DSMF with a spur running next to the drainage ditch along the southern side of the fence.

5.2 Hydrogeology Summary

5.2.1 Hydrostratigraphy

Soil borings advanced throughout SWMU 39 and other upgradient areas indicate that the subsurface is predominantly silty fine-grained sand with occasional lenses of clay, and coarse sand at thicknesses ranging between 2 inches and 2 ft. Clay lenses are most prevalent in the eastern portion of the Site near F39TW11. Regional geologic data suggest a competent confining unit is present at depth, but current investigations have not encountered this unit.

Slug tests performed at five monitor wells in January 2011 returned hydraulic conductivity values that ranged from 10^{-3} to 10^{-5} cm/sec:

- G4MW038 – 6.6×10^{-5} cm/sec – 35 ft bgs to 45 ft bgs
- G4MW040 – 1.6×10^{-4} cm/sec – 35 ft bgs to 45 ft bgs
- G4MW042 – 1.5×10^{-4} cm/sec – 35 ft bgs to 45 ft bgs
- G4MW043 – 1.1×10^{-3} cm/sec – 14 ft bgs to 24 ft bgs

- G4MW047 – 3.5×10^{-5} cm/sec – 25 ft bgs to 35 ft bgs

The slug test results are consistent with the typical hydraulic conductivity range (10^{-2} to 10^{-5} cm/sec) for silty sand (Freeze and Cherry 1979).

Three cross-sections have been prepared to show the local geology and delineation of TCE across the Site (Figure 5-1). Cross section A-A' extends northwest to southeast across the Site, parallel to the groundwater flow direction (Figure 5-2). Corss section B-B' (Figure 5-3) goes from southwest to northeast in the area of highest PCE and TCE impacts, perpendicular to groundwater flow at the eastern end of the Site. Cross section C-C' (Figure 5-4) goes south to north across the Site, near the western portion of the Site. As shown in all of the cross sections, the Site is underlain by silty fine-grained sands which range from 25 ft to 40 ft thick across the Site with silt and clay content increasing with depth In the eastern portion of the Site, near G4MW055, a 55 foot thick section of interbedded clay and clayey fine sand is present, followed by a layer of coarse-grained sand with two clay layers at twelve ft thick and seven ft thick present between 58 ft bgs and 85 ft bgs (Figure 5-3). Figure 5-4 displays a layer of clayey fine-grained sand that appears at approximately 25 ft bgs to 30 ft bgs beneath the overlying silty fine-grained sand in the western portion of the Site near Building 1160.

5.2.2 Groundwater Trends and Velocity

Groundwater generally flows to the northwest with both the shallow and deep potentiometric contours following the same general groundwater flow pattern. Based on water levels collected in May 2011, the water table averages 6.66 ft bgs throughout the Site, with the deepest level being 12.75 ft bgs at G4MW048 and the shallowest level being 3.00 ft bgs at G4MW034. Figure 4-12 displays shallow well potentiometric contours and Figure 4-13 displays deep well potentiometric contours. Table 4-15 summarizes the May 2011 water level measurements used for the potentiometric contour maps.

Based on the average hydraulic conductivity measured from slug testing in the shallow and deep zones of 1.61 feet/day and 0.354 feet/day, respectively, the gradient of the shallow and deep zones of 0.0089 ft/ft and 0.0068 ft/ft, respectively, and an assumed mobile porosity of each aquifer (10% in the shallow and 5% in the deep zone) the estimated Darcy groundwater velocity for the shallow and deep zones is 0.14 feet/day and 0.048 feet/day, respectively

5.3 Groundwater Quality

During the 2004 and 2008 groundwater investigations, low level VOCs were detected in the shallow groundwater. The impacts were primarily related to PCE and TCE. Additional groundwater investigations were conducted in 2010 and 2011 to delineate the impacts south and upgradient of the DSMF and evaluate potential sources.

The 2010 and 2011 groundwater investigations confirmed a diffuse low-level PCE and TCE (<100 µg/L) plume is present across much of site with higher concentrations of PCE and TCE (>1,000 µg/L) in deeper groundwater. The highest concentrations were detected in the 2010 temporary wells near F39TW11 and F39TW13 (Figure 4-1) and in monitor wells G4MW041 and G4MW051 installed in the same area. Figure 4-1 displays the 2010 temporary well sample results. Figure 4-6 displays the 2011 shallow zone groundwater results for PCE, TCE, DCE, and vinyl chloride (VC) from the permanent monitoring wells. Figure 4-7 displays the 2011 deep zone groundwater results for PCE, TCE, DCE, and VC from the permanent monitoring wells. Additional compounds detected above applicable criteria were benzene and chloroform.

5.3.1 Shallow Groundwater

TCE, VC, benzene, and chloroform were detected in the shallow groundwater above the tap water RSL (Figure 4-6). The TCE impacts to shallow groundwater extend from G4MW029 located east of the DSMF to G4MW043 located west of the DSMF, to G4MW014 located next to Building 1160 and G4MW048 located south of the DSMF. The highest TCE concentration in shallow groundwater detected during the 2011 groundwater monitoring event was within the fenced DSMF area in monitor well G4MW033 at a concentration of 33 µg/L. As shown on Figure 4-6, the TCE impacts in the shallow zone have been sufficiently delineated.

VC was detected in shallow monitor well G4MW010 at a concentration of 2.5 µg/L and G4MW048 at a concentration of 0.56 µg/L. VC was not detected in any of the monitor wells near G4MW010 or G4MW048. Based on the isolated locations of the detections and the low concentrations, it is believed that the detections are a result of biodegradation of TCE.

Benzene was detected above the RSL and MCL in shallow monitor well G4MW035. The detection appears to be localized with concentrations in nearby monitor wells either below screening criteria or below detection.

Chloroform was detected above the tap water RSL in shallow monitor well G4MW046 at an estimated concentration of 0.55 µg/L. Chloroform was not detected in any of the nearby monitor wells (Figure 4-6). Several metals were detected above the tap water RSL and/or the MCL in shallow groundwater. Total arsenic, total chromium, total lead and total mercury were detected above the tap water RSL in multiple wells. Mercury and chromium were not detected above their respective tap water RSL or MCL in the dissolved samples. It is believed that these detections are a result of turbidity and are not representative of the groundwater. Dissolved arsenic was detected above the tap water RSL of 0.000045 mg/L in 6 of the 27 samples at concentrations ranging from 0.004 mg/L to an estimated concentration of 0.0099 mg/L. Dissolved lead was detected in monitor well G4MW029 slightly above the MCL of 0.015 mg/L at a concentration of 0.017 mg/L (Figure 4-10).

5.3.2 Deep Groundwater

Several VOCs including PCE, TCE, DCE, benzene, and chloroform were detected in the deep groundwater above the tap water RSL. The PCE, TCE, and DCE impacts to deep groundwater are delineated by G4MW038 to the west of the DSMF, G4MW034 near the drainage canal, to G4MW058 to the north of the DSMF and G4MW049 located to the south of the DSMF.

The highest chlorinated VOC impacts during the VAP investigations and subsequent groundwater monitoring were detected near F39TW11 and G4MW041. During the January 2011 monitoring event, PCE was detected in G4MW041 at a concentration of 290 µg/L, TCE at a concentration of 550 µg/L, and DCE at a concentration of 97 µg/L. Deeper well G4MW051 located in the same area as G4MW041, also reported high VOC concentrations with TCE detected at a concentration of 380 ug/L and DCE detected at 260 µg/L. PCE was detected below the MCL at 2.2 µg/L. The highest impacts appear to be localized to G4WM041/G4MW051 area with concentrations decreasing considerably downgradient and all concentrations well below 100 µg/L (Figure 4-7).

Benzene was detected above the RSL but below the MCL in deep monitor well G4MW037. The detection is localized with concentrations in nearby monitor wells either below screening criteria or below detection.

Chloroform was detected above the tap water RSL in deep monitor wells G4MW047 and G4MW055 at concentrations of 1.1 µg/L and 0.72 µg/L respectively. Chloroform was not detected in any of the nearby monitor wells. One SVOC, bis(2-chloroisopropyl)ether, was detected in deep groundwater above the tap water RSL of 0.31 µg/L at an estimated concentration of 0.34 µg/L (Figure 4-9).

Several metals were detected above the tap water RSL and/or the MCL in deep groundwater. Total arsenic, total chromium, and total lead were detected above the tap water RSL in one or more wells. Chromium and lead were not detected above their respective tap water RSL or MCL in the dissolved samples. It is believed that these detections are a result of turbidity and are not representative of the groundwater. Dissolved arsenic was detected above the tap water RSL of 0.000045 mg/L in 6 of the 17 samples at concentrations ranging from 0.0042 mg/L to 0.024 mg/L and above the MCL of 0.01 mg/L at 2 of the 17 samples at concentrations ranging from 0.012 mg/L to 0.024 mg/L (Figure 4-11).

The impacts to deep groundwater are delineated vertically at G4MW055. During drilling, a clay layer was encountered in G4MW055 at approximately 58 ft bgs. During the VAP investigations, not enough water was present to collect samples deeper than 55 ft bgs. The vertical impacts to groundwater appear to be contained above this clay layer.

5.3.3 Overall Groundwater Quality

The investigations have sufficiently delineated the vertical and horizontal impacts to shallow and deep groundwater at the Site. No definitive source was identified for the groundwater impacts, however, informal conversations with site personal revealed that spent solvents from a former electronic repair shop may have been disposed of in the sewer lines near Building 1065, the area where the highest impacts have been detected. Utility maps for the area confirm the presence of sewer and water lines where the spent solvents were reportedly disposed. In addition, during the October 2010 MIP/VAP investigation near the southern corner of Building 1065, a concrete utility pipe was detected approximately 9.5 ft bgs. The location of the pipe is consistent with the location of water or sewer lines shown on the utility maps. The groundwater impacts have been delineated and appear to initiate close to where the spent solvents were reportedly disposed. It is believed that the sewer lines leaked over time, creating the higher level VOC plume in deep groundwater. These sewer lines may have also contributed to the lower level PCE and TCE detections across the Site by providing a pathway for contaminant migration. Both water and sewer lines were identified in the area traveling west towards the DSMF. Copies of the utility maps for the SWMU 39 area are included as Appendix G.

5.4 LNAPL

LNAPL, believed to be associated with historical maintenance operations at the tracked vehicle maintenance platforms (Buildings 1161 and 1163), has been detected in G4MW002 since 2002 and in G4MW001 since 2010. During the May 2011 monitoring event, approximately 0.65 ft of product was measured in G4MW001 and 3.26 ft of product was

measured in G4MW002. Eight soil borings were collected around these wells in 2010 to estimate the extent of LNAPL impacts. No evidence of LNAPL was identified in any of the borings indicating LNAPL is localized near the monitor wells and is not migrating which suggests there is no continuing source present. An estimate of the extent of LNAPL impacts is shown on Figure 5-5.

5.5 Soils

Between 2004 and 2011, 10 surface soil and 35 subsurface soil samples were collected within the fenced DSMF area. The DSMF is a paved area, so the surface soil samples were collected immediately below the concrete. Subsurface soil samples were collected at various depths up to 10 ft bgs. The samples were analyzed for VOCs, SVOCs, and metals.

5.5.1 Surface Soil

The 2010 surface soil samples reported low level PAHs above the RSL and SSL. The highest concentrations were detected just below the concrete pad on the southwest side of Building 1160 in borings F39SB013 and F39SB010. Soil samples collected in 2011 from monitor well G4MW053 located on the opposite side of Building 1160, to the northeast, were nondetect. F39SB016 and F39SB015, collected to the northwest and southeast of F39SB013 and F39SB010 were also non detect for PAHs.

Several metals were detected in the surface soil samples at concentrations similar to background levels. Lead was detected in the surface soil sample collected at F39SB009 at a concentration of 43 mg/kg above the background concentration of 8.81 mg/kg and the MCL based SSL of 14 mg/kg.

5.5.2 Subsurface Soil

The 2004 samples indicated low level VOC impacts in the subsurface soil exceeding the SSL(Figure 3-1). All of the samples were collected at or below the water table with the exception of G4MW018. The average groundwater table depth at SWMU 39 is 6.66 ft bgs. In the area where the soil samples were collected, the groundwater depth is approximately 4.5 to 5 ft bgs. It is probable that the majority of the samples collected are consistent with saturated soil and are more indicative of groundwater concentrations. The one soil sample collected above the water table at G4MW018 (1 to 4 ft bgs) indicated five VOCs to be present at low concentrations exceeding the risk-based SSL. Additional soil samples were collected in 2010, including sample F39SB012 was collected near G4MW018. No VOCs

were detected above the USEPA industrial soil RSLs or the SSLs in any of the 2010 samples.

Subsurface soil samples collected in 2010 at F39SB001 through F39SB006, F39SB008, F39SB009, F39SB011, and F39SB012 were non detect or below the industrial soil RSL and the SSLs. Concentrations of benz(a)anthracene and benzo(b)fluoranthene exceeded the risk-based SSLs in the subsurface soil sample collected at F39SB007, and the F39SB010 subsurface soil sample reported decreasing concentrations with depth with exceedances of the risk based SSL for benzo(a)anthracene and benzo(b)fluoranthene. Subsurface soil samples collected in 2011 at F39SB014, F39SB015, F39SB016, and G4MW053 were non detect or below the SSLs and industrial soil RSLs for PAHs. The concentration of 4-chlorobenzeneamine exceeded the risk-based SSL in the subsurface soil sample collected from F39SB015. Concentrations of several PAHs in the subsurface soil samples collected at F39SB013 and F39SB017 exceeded the SSLs, and the concentration of benzo(a)pyrene in both subsurface soil samples exceeded the industrial soil RSL.

Because concentrations of benzo(a)anthracene and benzo(b)fluoranthene exceeded the SSLs for the protection of groundwater, site-specific SSLs were calculated for those constituents (Attachment M). A few of the detected concentration of these constituents were slightly higher than the calculated site-specific SSLs, however none of these constituents were detected in groundwater samples collected in this area, indicating that the constituents are not leaching to groundwater. Further, it is believed that the PAH impacts to soil are related to the HOTs and USTs located west of Building 1160. This area was historically used for vehicle washing and service and is covered by 12 inches of concrete to support the heavier Army vehicles. The highest PAH detections in soil were found just below 12 inches of concrete (along the southwest side of Building 1160) with a fine sand below the concrete which would impede migration to groundwater. Moreover, the concentrations of PAHs in the subsurface soil samples decreased with depth, which is consistent with their Koc values which indicate a potential to absorb to soil rather than migrate to groundwater. Therefore, these constituents were not indentified as COPCs for the leaching to groundwater pathway. However, benzo(a)pyrene was identified as a COPC for the direct contact pathway.

The concentration of lead in the subsurface soil sample collected at F39SB009 from 3 to 3.5 ft bgs was below both the MCL-based SSL and the background value (11.1 mg/kg) at a concentration of 5.4 mg/kg, indicating that lead is not migrating downward towards groundwater. No other metals were detected in subsurface soils at concentrations exceeding the background concentrations. Low level VOC, PAH and metals were

detected in surface and subsurface soil. The investigations sufficiently delineated impacts in soil.

5.6 Surface Water and Sediment

A drainage canal parallels the southwestern DSMF fenceline. A storm water outfall discharges from the DSMF into the drainage canal approximately halfway down the fenced area near Building 1161.

One surface water and sediment sample was collected from the drainage canal in 2004 and seven surface water and eight sediment samples were collected in 2010. The 2004 and 2010 surface water and sediment investigations identified low level SVOC and VOC concentrations below the screening criteria in the drainage canal along the southern edge of the DSMF. Lead and mercury were detected in surface water at concentrations above the IWQS and arsenic was detected in the sediment above the residential soil RSL. Mercury was detected in only one surface water sample and was not detected in the adjacent upstream or downstream samples. Lead was detected in all of the surface water samples with the highest concentrations detected near the storm water outfall. The lead concentrations decreased downstream. Soap suds have been observed in the drainage canal near the storm water outfall which is most likely related to vehicle washing at the Maintenance Facility. Arsenic was detected in all of the sediment samples with the highest detection reported upstream adjacent to the rail lines. Both arsenic and lead are commonly found near rail lines. Historically, arsenic and/or lead have been used in old railroad ties, pesticides, and slag, used as railroad bed fill. Based on the close proximity of the rail lines to the drainage canal, it is believed that the metals detected in surface water and sediment are related to the rail lines and are not associated with the historical activities at SWMU 39.

6. Human Health Risk Assessment

The purpose of this human health risk assessment (HHRA) is to evaluate the potential current and hypothetical future risks and potential hazards to human health associated with constituents detected in surface and subsurface soil, groundwater, sediment and surface water samples collected at this Site.

The risk assessment approach is based on GAEPD's *Guidance for Selecting Media Remediation Levels at RCRA Solid Waste Management Units* (GAEPD 1996) and USEPA guidance for risk assessments (USEPA 2011b; 2004b; 2000a; 1992; 1991; 1989). This section provides a brief description of the Site data used in the risk assessment followed by the human health risk assessment and is organized as follows:

- Constituent Characterization: Identifies and summarizes the occurrence of constituents in surface soil, subsurface soil, combined surface and subsurface soil, sediment, and surface water, and identifies constituents of potential concern (COPCs).
- Exposure Assessment: Presents the Site conceptual exposure model that is used to identify exposure routes and discusses potential human exposure pathways and potential human receptors at the Site.
- Toxicity Assessment: Identifies the toxicological properties of the COPCs.
- Risk Characterization: Provides the receptor and pathway-specific risk calculations, and, if appropriate, the calculation of health-based goals.
- Uncertainty Analysis: Discusses the uncertainties in the HHRA process.
- Summary and Conclusions: Summarizes the results of the HHRA.

6.1 Constituent Characterization

This section summarizes the analytical results from samples collected during the previous site investigations and evaluates the adequacy and representativeness of the data for each environmental medium. The analytical data discussed in earlier sections are summarized and compared to the available screening levels in order to identify the COPCs to be evaluated further in this HHRA (Tables 6-1 through 6-6).

6.1.1 Data Evaluation

Data generated from the SWMU 39 site characterization activities were evaluated for use in the HHRA. The data were evaluated following the USEPA guidance for data usability (USEPA 1992a). All surface soil data collected at depths less than 1 foot were included in the dataset regardless of when the samples were collected; similarly, all subsurface soil data collected at depths between 1 foot and 8 feet were evaluated in a separate dataset. Finally, all soil collected between the ground surface and 8 feet were evaluated as a combined surface and subsurface soil dataset. Sediment and surface water data from the April 2012 ARCADIS sampling event was used to represent conditions at the storm water ditch located adjacent to SWMU 39. For duplicate samples, the result used in the HHRA was selected as follows: (1) if both samples reported positive detects, the higher measured analytical concentration was used, (2) if only one result was a positive detect, that concentration was used, or (3) if both samples reported non-detects, the lower sample quantification limit (SQL) was used as the proxy concentration.

The HHRA datasets were summarized to identify the frequency of detection (FOD), the range of SQLs, the range of detected values, and the location of the maximum concentration for each constituent.

The COPCs quantitatively evaluated in the HHRA were those constituents detected in environmental media. The maximum detected constituent concentration in each medium was compared with the appropriate screening levels. Constituents detected at concentrations below the screening levels were not considered further in this HHRA. Those constituents present at concentrations greater than the risk-based screening levels (RBSLs), and those for which an RBSL is unavailable, were retained for further analysis.

The current USEPA RSLs (USEPA 2013e) were used to screen the data. The non-carcinogenic RSLs were adjusted for a hazard quotient (HQ) of 0.1 in order to account for potential constituent additivity. The RSLs based on carcinogenic effects (using a target cancer risk of 1×10^{-6}) were used. The screening levels used were identified from their source in the following order of priority:

- USEPA RSLs (USEPA 2013e);
- USEPA MCL-based SSL (USEPA 2013e);
- Georgia IWQS (GAEPD 2011); and

- USEPA National Recommended Water Quality Criteria (USEPA 2013f).

Chromium and mercury data were conservatively compared to the hexavalent chromium RSLs and elemental mercury RSLs, respectively.

For the subsurface soil data, volatile constituents were identified and if they were detected, then the constituent was identified as a COPC for the vapor migration pathway, as discussed below.

The following sections discuss the samples for each medium-specific data set, including the constituents analyzed, constituents detected, and a comparison of constituent concentrations and detection limits with the appropriate screening criteria.

6.1.1.1 Surface Soil

The surface soil depth interval corresponds to 0 to 1 foot bgs. Between four and ten samples were collected within this depth range, as seen in Table 6-1. Maximum detected concentrations of constituents in surface soil were compared with USEPA Residential Soil RSLs.

The following SVOCs were all detected in the surface soil at levels that exceeded the Residential Soil RSL and were carried forward as COPCs: benz(a)anthracene, benzo(a)pyrene, benzo(b)fluoranthene, dibenz(a,h)anthracene, and indeno(1,2,3-cd)pyrene. Chromium was also detected above the Residential RSL. In addition, the following SVOCs were detected in the surface soil but do not have screening levels: acenaphthylene, benzo(g,h,i)perylene, and phenanthrene. These constituents were identified as COPCs for surface soils (Table 6-1).

6.1.1.2 Subsurface Soil

The subsurface soil depth interval corresponds to 1 to 8 ft bgs. Between 12 and 24 samples were collected within this depth range, as seen in Table 6-2. Maximum detected concentrations of constituents in subsurface soil were compared with USEPA Residential Soil RSLs.

The following SVOCs were all detected in the surface soil at levels that exceeded the Residential Soil RSL and were carried forward as COPCs: benz(a)anthracene, benzo(a)pyrene, benzo(b)fluoranthene, dibenz(a,h)anthracene, and indeno(1,2,3-cd)pyrene. Arsenic and chromium were also detected above the Residential RSLs. In

addition, the following constituents were detected in the surface soil but do not have screening levels: methylcyclohexane, acenaphthylene, benzo(g,h,i)perylene, and phenanthrene. These constituents were identified as COPCs for surface soils (Table 6-2).

The following constituents were identified as COPCs for the indoor air pathway: acetone, benzene, 1-methylethylbenzene (also known as cumene or isopropylbenzene), carbon disulfide, 1,2-dibromomethane, DCE, ethylbenzene, methylcyclohexane, 4-methyl-2-pentanone, toluene, TCE, xylenes (total), acenaphthylene, anthracene, benzaldehyde, fluorene , 2-methylnaphthalene, naphthalene, phenanthrene, pyrene, and mercury.

6.1.1.3 Combined Surface and Subsurface Soil

Combined surface and subsurface soil corresponds to the 0 to 8 ft bgs depth interval since groundwater is encountered below 8 ft bgs. Between 16 and 28 samples were collected within this depth range, as seen in Table 6-3. Maximum detected concentrations of constituents in the combined surface and subsurface soil were compared with USEPA Residential Soil RSLs. The comparison to the screening levels is presented in Table 6-3.

The following SVOCs were all detected in the combined surface and subsurface soil at levels that exceeded the applicable screening level for residential soil and were carried forward as COPCs: benz(a)anthracene, benzo(a)pyrene, benzo(b)fluoranthene, dibenz(a,h)anthracene, and indeno(1,2,3-cd)pyrene. Arsenic and chromium were also detected above the applicable screening levels. The VOC, methylcyclohexane, as well as SVOCs acenaphthylene, benzo(g,h,i)perylene, and phenanthrene were detected in the combined surface and subsurface soil but do not have screening levels. These constituents also were carried forward as COPCs (Table 6-3).

6.1.1.4 Sediment

Eight samples were collected in the sediment during April 2010, as seen in Table 6-4. Maximum detected concentrations were compared with USEPA Residential Soil RSLs. The comparison to the screening levels is presented in Table 6-4.

Arsenic and chromium were detected in the sediment at maximum concentrations that exceeded the Residential Soil RSLs and were carried forward as COPCs. In addition, phenanthrene was detected in the sediment, but does not have a screening level and was therefore retained as a COPC (Table 6-4).

6.1.1.5 Surface Water

Seven samples were collected in the surface water during April 2010, as seen in Table 6-5. Maximum detected concentrations of constituents in surface water were compared with the Georgia IWQS, or in the absence of the Georgia standard, the National Recommended Water Quality Critierion. The comparison to the screening levels is presented in Table 6-5.

Lead has a Georgia IWQS; however, because the IWQS is based on ecological endpoints, the detected concentrations of lead in surface water were compared to the USEPA federal drinking water action level. The detected concentrations of lead were below the action level. However, at the request of GAEPD, lead was selected as a COPC for surface water. Acetone; cis-1,2-dichloroethene; caprolactam; lead; and mercury were identified as COPCs for the surface water (Table 6-5).

6.1.1.6 Groundwater

The groundwater analytical data (Table 6-6) were reviewed and compared to the USEPA tap water RSLs and the drinking water standards (MCLs and/or action levels). Based on this evaluation, it was determined that use of the groundwater as a potable water supply would yield an unacceptable risk and/or hazard. The constituents that were present in groundwater above their USEPA tap water RSLs also have established federal drinking water standards or MCLs, with the exception of bis(2-chloroisopropyl)ether which was detected on two occasions at a concentration approximately equal to the USEPA tap water RSL (0.00034 mg/L vs. 0.00031 mg/L); therefore, this constituent would not be evaluated further if exposure to groundwater were included in subsequent sections. However, since MCLs are available for all constituents that would pose a risk or hazard if exposure to groundwater were evaluated quantitatively in the risk assessment, MCLs were selected as the remedial goals for the groundwater constituents and exposure to groundwater was not evaluated further.

6.2 Exposure Assessment

The purpose of the exposure assessment is to evaluate the ways receptors might be exposed to COPCs at the Site. Exposure can only occur when the potential exists for a receptor to contact COPCs or when there is a mechanism for COPCs to be transported to a receptor. Without exposure, there is no risk; therefore, the exposure assessment is a critical component of the HHRA. The assessment of exposure includes characterization of the physical environment, identification of exposure pathways (including migration pathways, exposure

points, and exposure routes), and identification of potentially exposed individuals and populations.

An exposure pathway is defined by the following four elements:

1. A source and mechanism of constituent release to the environment.

2. An environmental transport medium for the released constituent.

3. A point of potential contact by the receptor with the medium containing the constituent (the exposure point).

4. A route of exposure to the receptor at the exposure point (i.e., ingestion, inhalation, or dermal contact).

The purpose of the exposure assessment is to identify and evaluate the ways a population may be exposed to COPCs. This typically involves estimating concentrations along potential pathways between sources and receptors. This usually is accomplished using site-specific data and, when necessary, mathematical modeling.

The exposure pathway site conceptual exposure model (SCEM) provides the framework of the HHRA. It characterizes the primary and secondary potential sources and release mechanisms and identifies the primary exposure points, receptors, and exposure routes. The elements of the SCEM are discussed below and summarized on Figure 6-1.

6.2.1 Site Conceptual Exposure Model

The SCEM is used to systematically delineate the relationship between the impacted site-media, exposure pathways, and potential receptors (Figure 6-1). In general, human receptors may include site workers, trespassers, construction workers, hypothetical future residents, or other humans that could come into contact with potentially affected environmental media (e.g., soil, sediment, surface water, and groundwater). Exposure points are locations where exposure could occur, and exposure routes describe the basic mechanisms by which the COPCs may contact the body.

Operational activities at the Site may have resulted in the presence of COPCs in the soil, and subsequent migration processes, such as the infiltration of rainwater, may have resulted in the presence of constituents in groundwater at the Site. The sources of constituents that have been detected in the Site media presumably are the former USTs

and their associated HOTs near Building 1161 and former UST 61, as discussed earlier in this report. The sources and impacted soil were removed in 2006 and 2007. Additional LNAPL was found near Building 1161 in 2008. Any residual soil impacts as well as the diffuse chlorinated VOC groundwater plume may act as secondary sources of constituents to the environment. Runoff from the DSMF may also transport site-related constituents to the surface water drainage ditch. The potential migration pathways are illustrated in the SCEM flowchart presented in Figure 6-1.

6.2.2 Potential Receptors

The current land use at the Site is industrial. Residential use of Fort Stewart and SWMU 39 in particular is not likely to occur; however, since there are no land use controls in place at SWMU 39, it is possible that the Site could become residential sometime in the future. Therefore, hypothetical future residential exposures were considered in the HHRA. In addition, individuals living at Fort Stewart could access the Site, although there is currently a fence surrounding the DSMF where most of the subsurface impacts were observed. Thus, it is possible that trespassers could have access to surface soil, surface water, and sediment at the Site. It should be noted that the Site is currently paved or covered with buildings precluding the potential for contact with soil.

The receptors identified for SWMU 39 are a site worker, hypothetical future construction worker, hypothetical adolescent trespasser, and a hypothetical future child and adult resident. Hypothetical *future* receptors were identified assuming that no land use restrictions for invasive soil activities were appended to the property deed. Hypothetical adolescent trespasser, sans *future*, refers to older children and young adults who may be present at Fort Stewart during their parent's tour of duty and who could access the adjacent drainage ditch. As seen in Figure 6-1, receptors at the Site could include:

- a current and hypothetical future site worker (differentiated based on the possibility of the soil becoming exposed by either the concrete pavement being removed or the soil would be completely inverted or mixed in the future as part of development (i.e., current subsurface soil could become surface soil in the future);
- a hypothetical future construction worker who may be present to repair utility or sewer lines, or to conduct short-term construction projects;
- a hypothetical adolescent trespasser; and
- a hypothetical future child and adult resident.

Potential exposures of site workers, construction workers, and residential receptors are quantitatively evaluated for the Site.

6.2.3 Exposure Point Concentrations

A statistical approach was used to identify the most appropriate representative concentrations for the COPCs in most cases. Consistent with USEPA methodology, the lower of the maximum concentration and the 95 percent upper confidence level (95UCL) on the mean (assuming a one-tailed distribution) was identified as the Exposure Point Concentration (EPC) (USEPA 2002a). The 95UCLs were calculated, where possible, using the latest ProUCL software available from USEPA (USEPA 2010). Non-detected values were treated in accordance with the software protocol. The 95UCLs were selected using the output from the ProUCL software. The 95UCL is a statistical number calculated to represent the mean concentration with 95 percent confidence that the true arithmetic mean concentration for the Site will be less than the 95UCL. The high level of confidence (i.e., 95 percent) is used to compensate for the uncertainty involved in representing site conditions with a finite number of samples. The ProUCL outputs for the COPCs are provided in Appendix H.

In order to quantify exposure, typically, the EPCs for each COPC are used in conjunction with intake equations and associated exposure parameters to evaluate site risk/hazard. The EPCs were the calculated 95UCL or maximum detected concentration and are presented in Table 6-7. If the 95UCL value was available then it was used, if there was not enough data to calculate a 95UCL value then the maximum value was used. If an “m” is to the right of the EPC in Table 6-7, then the value is based on a maximum concentration; otherwise, the value is based on a 95UCL-based mean concentration.

6.2.4 Physical and Chemical Properties

The environmental fate and transport of the COPCs are dependent on their physical and chemical properties, the environmental transformation processes affecting them, and the media through which they are migrating. The physical and chemical properties that were used to evaluate potential exposure to the COPCs detected in environmental media were compiled for each of the COPCs. The physical and chemical properties of the COPCs, including molecular weight, water solubility, Henry’s law constant, diffusivity in air and water, and the organic-carbon partition coefficient (K_{oc}) for COPCs are presented in Table 6-8.

6.2.4.1 Particulate Emissions from Soil

The soil concentrations (direct measurement data) were used to estimate the ambient air concentrations based on the emission of particulates from the Site. The derivations for

particulate emission factors (PEF) for fugitive dust using the equations are presented in Table 6-9 for current and hypothetical future site worker and hypothetical future construction worker exposures, and Table 6-10 for hypothetical future resident, and hypothetical adolescent trespasser exposures. The USEPA (2002b) default input parameters were used for the fraction of vegetative cover, and equivalent threshold value of wind-speed and function dependent upon wind-speed. The mean annual wind speed of 8 miles per hour for Savannah, Georgia was used (National Oceanic and Atmospheric Administration [NOAA] 1998). Input parameters and the resulting PEF values can be found in Table 6-11.

6.2.4.2 Volatilization Factor for Soil

To evaluate emission of volatiles from soil, constituent-specific volatilization factors (VFs) were calculated using the USEPA (2002b) guidance. The VF equation can be broken into two separate models: a model to estimate the emissions and a model to estimate the dispersion (reduced to the term Q/C) that simulates the dispersion of volatile constituents in ambient air. USEPA default parameters were used to estimate the VF, using the equations in Table 6-9 and Table 6-10. Input parameters and the resulting VFs can be found in Table 6-12.

6.2.4.3 Volatilization Factor for Surface Water

Emissions via volatilization from surface water were estimated following USEPA (1988) guidance. The surface water VF equation can be found in Table 6-13a. The VF was calculated assuming that there was a mass transfer from the surface water to the air directly above the water. The mass transfer of the constituent is assumed to be driven by molecular diffusion. It was assumed that emission would occur from a 1 square meter source area. The mean annual wind speed for Savannah, Georgia was obtained from NOAA (1998). The results of the VF calculations are presented in Table 6-14.

6.2.4.4 Vapor Intrusion into Buildings

The evaluation of the vapor intrusion exposure pathway was accomplished using the USEPA vapor intrusion model, which was developed based on the equations derived by Johnson and Ettinger (1991). The USEPA model was used to evaluate potential migration of COPCs in soil into indoor air. Since the model predates the latest USEPA recommendation for assessing inhalation exposure, the equations were adjusted to accommodate an exposure time. The toxicity values were also updated in the spreadsheets.

- The soil source depth below grade was assumed to be 1 ft, or 30.5 centimeters because the sample soil impacts were present in the subsurface.
- An average subsurface soil temperature of 19 degrees Celsius was estimated based on USEPA (2004b) guidance.
- A soil type of silty clay was selected to represent the soils at SWMU 39.

6.2.4.5 Dermal Absorption of Constituents of Potential Concern in Soil

Dermal absorption efficiencies (ABSd) are used to reflect desorption of the constituent from soil and sediment and the absorption of the constituent across the skin. The ABSd terms are constituent-specific, however, general factors for classes of compounds have been recommended by USEPA (2004b). The constituent-specific ABSd values are provided in Table 6-13b.

6.2.4.6 Dermal Absorption of Constituents of Potential Concern in Water

The USEPA (2004a) recommends that a dermally absorbed dose from water (e.g., surface water) be evaluated for the COPCs. The absorption of COPCs from water through the skin as a function of the constituent-specific permeability coefficient (Kp), the thickness of the skin, the duration of exposure, and other constituent-specific parameters. The equations used to calculate the dermal absorption are provided in Table 6-13a, while the dermal absorption parameters are provided in Table 6-13b.

6.2.5 Exposure Assumptions

The potential for exposure to COPCs in environmental media is limited. The majority of the subsurface impacts are located at the DSMF which is paved or covered with buildings which preclude contact with surface soil under current conditions. However, although there are no plans to remove the pavement or raze the buildings, the concrete covering the Site could be removed in the future and site workers could contact impacted soil. The drainage ditch adjacent to the Site is overgrown thereby making it difficult to contact surface water and sediments. Therefore, under current conditions, the likelihood of most of the exposures evaluated in this HHRA is limited.

Site workers could contact soil if it were exposed and inhale vapors migrating from the subsurface into a building. A construction worker may contact soil during excavations. Adolescent trespassers may contact surface soil if it were exposed, may occasionally wade

in the surface water or contact the sediment in the drainage ditch. If the Site were redeveloped, the hypothetical future adult and child residents could be exposed through the incidental ingestion of soil, dermal contact with soil, and inhalation of vapors or dust. Details regarding each potential exposure scenario are provided in the following subsections.

This HHRA is based on evaluation of reasonable maximum exposure (RME) scenarios and assumptions. The USEPA (1992; 1989) defines the concept of RME (using the term High End Exposure scenario) as a potential estimate of the individual exposure for those persons at the upper end of an exposure distribution. In this HHRA, the RME evaluation has been constructed with reasonable maximum input values that are consistent with the risk evaluation envisioned by the USEPA. RME assumptions were estimated for each potential exposure pathway using standard default assumptions (USEPA, 2011b; 1991; 1989) and site-specific information. Values for the receptor-specific exposure parameters are summarized in Table 6-16 are discussed in the following subsections. The EPCs that are discussed above are presented in Table 6-7.

A conservative assumption underlying all of the risk calculations is that the constituent concentrations remain constant over the entire period of exposure. The effects of attenuation processes that reduce the concentrations over time are not considered.

6.2.5.1 Current and Hypothetical Future Site Worker

As stated above, the land surface above the impacted soil is mostly covered with asphalt or concrete. However, the cap could be removed in the future; thus, all soil COPCs were considered in the HHRA. Current and hypothetical future site workers were differentiated based on the possibility of the soil becoming exposed two different ways. The first would be that the concrete pavement would be removed and the second would be that the soil would be completely inverted or mixed in the future as part of development (i.e., current subsurface soil could become surface soil in the future). Consequently, direct contact to surface soil (0-1 ft bgs) was used for current site workers based on the assumption that the concrete would be removed but no mixing of the soil would occur and direct contact with subsurface soil (1-8 ft bgs) was used for hypothetical future site workers.

The Site worker may also be exposed to site-related constituents as a result of vapor migration to indoor air from soil or groundwater. The EPCs were used for estimating the potential contribution of volatile constituents in soil that could migrate to indoor air.

6.2.5.2 Hypothetical Future Construction Worker

The hypothetical construction worker may be exposed to COPCs in soil during invasive activities. The exposure to COPCs in the combined surface and subsurface soil will be evaluated for incidental ingestion of, dermal contact with, and inhalation of vapors and dust.

6.2.5.3 Hypothetical Adolescent Trespasser

The hypothetical adolescent trespasser may be exposed to constituents in the surface soil as well as subsurface soil in the event of soil inversion during excavation activities, surface water, and sediment if the fence and concrete cap were removed. If the adolescent trespasser were to contact soil, they could be exposed to the COPCs through incidental ingestion, dermal contact and inhalation of vapors and dust. Similarly, potential exposure to constituents in surface water could occur through the ingestion, dermal contact and inhalation of vapors. Since sediment is damp, vapors would not be expected to occur; thus, exposure to COPCs in sediments would occur through incidental ingestion and dermal contact. The equations for exposure to sediment are presented in Table 6-15.

6.2.5.4 Hypothetical Future Resident

The hypothetical future adult and child residents may be exposed to constituents in the surface soil as well as subsurface soil in the event of soil inversion during excavation activities. Additionally, the volatile constituents in soil could form vapors which could migrate from the subsurface into a home built on the Site.

6.3 Toxicity Assessment

The toxicity assessment discusses the two general categories of toxic effects (noncarcinogenic and carcinogenic) and constituent-specific toxicity values used to calculate potential risks for these two types of toxic effects. The toxicity values were obtained from the most recent USEPA (November 2013e) RSL table, based on GAEPD guidance.

6.3.1 Noncarcinogenic Effects

The potential for noncarcinogenic effects is estimated by comparing a calculated exposure dose with a reference dose (RfD) for oral and dermal exposure and a reference concentration (RfC) for inhalation exposure for each individual constituent. The RfD and RfC represent a daily exposure level that is designed to be protective of human health, even for sensitive individuals or subpopulations.

For a given constituent, the dose or concentration that elicits no adverse effect when evaluating the most sensitive response in the most sensitive species is referred to as the "no observed adverse effect level." This level is used to establish non-cancer toxicity values (called RfDs or RfCs). The RfD or RfC represents a daily exposure level that is not expected to cause adverse noncarcinogenic health effects. Chronic RfDs or RfCs are used to assess long-term exposures ranging from 7 years to a lifetime. Subchronic RfDs or RfCs are used to evaluate the potential for adverse health effects associated with exposure to constituents over a period of 2 weeks to 7 years.

Noncarcinogenic toxicity values used in calculating risk are presented in Table 6-17 for oral and dermal exposure and Table 6-18 for inhalation exposure.

6.3.2 Carcinogenic Effects

Cancer induction in humans and animals by constituents proceeds through a complex series of reactions and processes. Carcinogenic constituents may produce tumors at the point of application or contact, or they may produce tumors in other tissues after they have been distributed throughout the body. Some constituents are associated only with one or two tumor types, while others may cause tumors at many different sites.

For carcinogens, USEPA's Cancer Guidelines (USEPA 2005a) recommend a conservative default approach in which it is assumed that any level of exposure could cause cancer when data are not adequate to understand the mode of action. Although the 2005 guidelines recommend that USEPA consider both linear and nonlinear dose-response models. USEPA generally relies on the default approach and extrapolates from either the lowest dose or point of departure from laboratory animal data using a mathematical model that plots a line through the zero point and, based on the slope of this dose-response line, assigns a risk level for increasingly smaller doses of a particular compound. While constructing the linear extrapolation from animal or human data, USEPA uses values that are based on a 95 percent UCL of the dose/response slope. Therefore, any risk estimates derived from the model are based on values higher than those reported in the underlying studies and not the most likely estimates generated by applying the mathematical model to the actual study data. The UCL for the slope of this line, called the cancer slope factor (CSF) if the units are risk per dose or the inhalation unit risk factor if the units are risk per micrograms per cubic meter ($\mu g/m^3$). CSFs and inhalation unit risk factors are used to assess carcinogenic risk.

Carcinogenic toxicity values used for calculating risk for soil and groundwater exposure pathways are presented in Table 6-19 for oral and dermal exposures and Table 6-20 for inhalation exposures.

6.3.3 Dermal Toxicity Values

USEPA has not yet developed toxicity values for dermal exposures. For this reason, the oral toxicity values (RfD_o and CSF_o) and the oral absorption efficiency were used to derive adjusted toxicity values (RfD_a and CSF_a) (adjusted to the absorbed dose) for use in assessing dermal exposure (USEPA 1989):

$$RfD_a = RfD_o \times \text{Oral Absorption Efficiency}$$

$$CSF_a = CSF_o \,/\, \text{Oral Absorption Efficiency}$$

The adjusted toxicity values represent the theoretical toxicity of the orally absorbed dose of the constituent secondary to dermal exposure. The USEPA guidance recommends that the oral toxicity values for organic constituents and many inorganic constituents should not be adjusted to assess dermal exposure (i.e., oral absorption efficiency = 1) and presents recommended oral absorption efficiencies for a few inorganics (USEPA 2004b).

The oral absorption efficiency values and the RfD_as used to assess risk for the dermal exposure route are presented on Table 6-17 for noncarcinogens and Table 6-19 for carcinogens. Uncertainty is associated with the adjusted toxicity values and with the dermal risks derived using these values due to the uncertainty in the oral toxicity values combined with the uncertainty in the oral absorption efficiency default and constituent-specific values. However, the calculated dermal risks are expected to be very conservative and therefore will overestimate human health risks.

6.4 Risk Characterization

Risk characterization is the integration of the results of the data evaluation, exposure assessment, and toxicity assessment to yield a quantitative measure of cancer risk and non-cancer hazard. Potential risks to human health are evaluated quantitatively by combining calculated exposure levels and toxicity data. A distinction is made between noncarcinogenic and carcinogenic endpoints, and two general criteria are used to describe the HQ for noncarcinogenic effects and excess lifetime cancer risk (ELCR) for constituents evaluated as human carcinogens.

6.4.1 Hazard Quotient for Non-Cancer Hazard

Exposure doses are averaged over the expected exposure period to evaluate non-carcinogenic effects. The HQ is the ratio of the estimated exposure dose and the RfD. Thus, an HQ greater than 1 indicates that the estimated exposure level for that constituent exceeds the RfD or RfC. This ratio does not provide the probability of an adverse effect. Although an HQ less than 1 indicates that health effects should not occur, an HQ that exceeds 1 does not imply that health effects will occur, but that health effects are possible.

The sum of the HQs is the hazard index (HI). A limitation with the HI approach is that the assumption of dose additivity is applied to compounds that may induce different effects by different mechanisms of action. Consequently, the summing of HIs for a number of compounds that are not expected to induce the same type of effects or that do not act by the same mechanism, may overestimate the potential for toxic effects. Consistent with USEPA risk assessment guidelines for chemical mixtures, in the event that the total HI for an exposure scenario exceeds 1, it is incumbent on a risk assessor to segregate HQs by target organ/critical effect (USEPA 1989). Therefore, if the calculated HI exceeds 1 as a consequence of summing several HQs for constituents not expected to induce the same type of effects or that do not act by the same mechanism, the HIs may be segregated by effect and mechanism of action to derive separate HIs for each target-organ/critical-effect group (USEPA 1989).

6.4.2 Excess Lifetime Cancer Risk

Potential cancer risks are estimated as the incremental increased probability of an individual developing cancer over a lifetime as a result of pathway-specific exposure to carcinogenic constituents, or the ELCR. To calculate the ELCR, the estimated daily intake of a chemical carcinogen averaged over a lifetime is multiplied by a constituent-specific slope factor. Consideration is given to exposure to multiple constituents, as well as multiple exposure pathways, when calculating the risk of an individual developing cancer. This is accomplished by summing ELCRs for each constituent within a given pathway and across pathways within a scenario.

When evaluating potential individual cancer risks, USEPA has established an acceptable risk range of 1 in 1,000,000 (1×10^{-6}) to 1 in 10,000 (1×10^{-4}) (USEPA 1989). In establishing this range, USEPA accepted the policy that a risk range, rather than a single risk value, adequately protects public health (USEPA 1989). A target risk of 1×10^{-5} is used for this site since that is the middle of USEPA acceptable risk range and because the current use of the site is as an active military base and the location of SWMU 39 is in an area of the post that is

strictly commercial/industrial rather than residential. There is limited access to the site since the base is controlled access through security gates. The site is also enclosed by a security fence, and is covered in 12 inches of concrete. There are no plans to change land use around SWMU 39 in the foreseeable future. Therefore, based on the current and future land use, Fort Stewart recommends using the target risk of 1×10^{-5}. The GAEPD concurred with this evaluation (GAEPD 2014). Nonetheless, following USEPA guidance, the GAEPD requires that remedial goals be developed for constituents with individual ELCRs exceeding 1×10^{-6} or HIs exceeding 0.1. The risk calculations are discussed in detail below and can be found in Tables 6-21 through 6-31 as well as in Appendices I and J for the vapor migration calculations. Further, the results are summarized in Table 6-32.

6.4.3 Current Site Worker

Constituents of potential concern associated with surface soil and vapor intrusion from subsurface soils were both evaluated. The ELCR for the current site worker exposed to surface soil was 3×10^{-6} and the HI was calculated at 0.002 (Table 6-21). The ELCR from exposure to vapors migrating from subsurface soil was calculated to be 2×10^{-7} and the HI was calculated to be 0.03, as seen in Appendix I, Table I-4. Thus, the total ELCR for the current site worker from direct contact with surface soil and inhalation of vapors in indoor air was calculated to be 4×10^{-6} while the total HI was 0.03, as seen in Table 6-32. The calculated ELCR is below the facility target risk level of 1×10^{-5} and the HI is below the GAEPD acceptable risk target.

6.4.4 Hypothetical Future Site Worker

Constituents of potential concern associated with the subsurface soil and vapor intrusion from subsurface soils were both evaluated for the hypothetical future site work receptor. The ELCR based on exposure to subsurface soil was 5×10^{-6} and the HI was calculated at 0.003 (Table 6-22). The ELCR from exposure to vapors migrating from subsurface soil was calculated to be 2×10^{-7} and the HI was calculated to be 0.03, as seen in Appendix I, Table I-4. Thus, the total ELCR for the current site worker from direct contact with surface soil and inhalation of vapors in indoor air was calculated to be 5×10^{-6} while the total HI was 0.03, as seen in Table 6-32. The calculated ELCR is below the facility target risk level of 1×10^{-5} and the HI is below the GAEPD acceptable risk target.

6.4.5 Hypothetical Construction Worker

Constituents of potential concern associated with combined surface and subsurface soil was evaluated for the hypothetical construction worker. The ELCR based on exposure to

combined surface and subsurface soil was 1×10^{-7} and the HI was calculated at 0.003 (Table 6-23). The calculated ELCR and HI are both well below the GAEPD acceptable risk targets (Table 6-32).

6.4.6 Hypothetical Adolescent Trespasser

Constituents of potential concern associated with surface soil, subsurface soil (in the event of soil inversion), sediment, and surface water were evaluated for the hypothetical adolescent trespasser. The total ELCR from exposure to surface soil was 2×10^{-6} and the total HI was 0.0006 (Table 6-24). The total ELCR from exposure to subsurface soil was 3×10^{-6} and the total HI was 0.001 (Table 6-25).

The adolescent trespasser receptor could also come into contact with sediment or surface water given a hypothetical future scenario in which the security fence bordering the property is removed. The ELCR based on exposure to sediment was calculated to be 9×10^{-7} and the HI was calculated at 0.01 (Table 6-26). There were no carcinogenic COPCs in surface water; thus an ELCR could not be calculated. The HI for exposure to surface water was calculated at 0.0007 (Table 6-27a). Lead was a COPC for surface water. The results of the lead model for the adolescent trespasser are presented in Table 6-27b. The results indicated a predicted blood lead level of 1.0 micrograms per deciliter (µg/dL) which is well below the benchmark of 10 µg/dL.

The total ELCR for the adolescent trespasser was 6×10^{-6} and the HI was 0.01. The ELCR is below the facility target risk level of 1×10^{-5} and the HI is well below the GAEPD acceptable risk target (Table 6-32).

6.4.7 Hypothetical Resident

Constituents of potential concern associated with surface soil, subsurface soil, and indoor air were all evaluated for the hypothetical child and adult resident receptors. Under future land use conditions, a future resident might be exposed to current surface soil. In addition, the subsurface soil could become inverted as part of excavation activities. This could result in the current subsurface soil becoming part of the hypothetical future surface soil medium. Consequently, both scenarios were conservatively considered separately and added together to quantify a total receptor risk. As requested by the GAEDP, child and adult residents were evaluated separately.

Future Hypothetical Child Resident

The total ELCR for exposure to surface soil was 5×10^{-5} and the total HI was 0.03 (Table 6-28). The total ELCR for exposure to subsurface soil was 6×10^{-5} and the total HI was 0.03 (Table 6-29). The ELCR from exposure to vapors migrating from subsurface soil was calculated to be 2×10^{-7} and the HI was calculated to be 0.1, as seen in Appendix J, Table J-4. The cumulative ELCR for a hypothetical child resident at the Site was 1×10^{-4} and the cumulative HI was 0.2 (Table 6-32). This assumes that the child resident would contact both surface and subsurface soil simultaneously. The ELCR exceeded the GAEPD acceptable risk target of 1×10^{-6}, whereas the HI was below the risk target.

Future Hypothetical Adult Resident

The total ELCR for exposure to surface soil was 5×10^{-6} and the total HI was 0.003 (Table 6-30). The total ELCR for exposure to subsurface soil was 7×10^{-6} and the total HI was 0.005 (Table 6-31). The ELCR from exposure to vapors migrating from subsurface soil was calculated to be 8×10^{-7} and the HI was calculated to be 0.1, as seen in Appendix J, Table J-8. The cumulative ELCR for a hypothetical adult resident at the Site was 1×10^{-5} and the cumulative HI was 0.1 (Table 6-32). The ELCR equals the proposed facility acceptable risk target of 1×10^{-5}, whereas the HI was below the GAEPD risk target.

6.5 Remedial Goal Option Calculations

Remedial goal option (RGO) concentrations were calculated for the reasonably anticipated future use exposure scenarios that exceeded the low end of the target risk range of 10^{-6} to 10^{-4} or the benchmark of 1 as requested by the GAEPD (2014). All of the constituents in groundwater with ELCRs or HIs greater than the benchmarks also have drinking water standards available. Therefore, the RGOs for constituents in groundwater are set at the drinking water standard.

Constituents of concern (COCs) for soil were identified as those constituents whose ELCR was greater than 1×10^{-6} or had an HI of 0.1. Several PAHs were identified as COCs. One set of soil RGOs were derived for each applicable receptor (site worker, adolescent trespasser, future hypothetical child resident, and future hypothetical adult resident), as the exposure assumptions were the same for exposure to either surface or subsurface soil.

Soil RGOs were derived using target cancer risk levels of 1×10^{-6}, 1×10^{-5}, and 1×10^{-4} following USEPA (2000c) guidance. The final RGOs will correspond to a target cancer risk (TCR) of 1×10^{-5}, for this site because the current use of the site is as an active military base and the location of SWMU 39 is in an area of the post that is strictly commercial/industrial rather than residential. There are no plans to change land use

around SWMU 39 in the foreseeable future. A TCR of 1×10^{-5}, is selected for the Site since workers would not typically be exposed to soil (as assumed in risk estimations) due to the presence of buildings, parking lot, concrete and/or vegetation barrier covering most of the site thus limiting exposure to contaminants in soil. Therefore, based on the current and likely future land use, Fort Stewart recommends using the target risk of 1×10^{-5}. The GAEPD concurred with this evaluation (GAEPD 2014). The calculation was based on the EPC and calculated ELCR for the relevant scenarios using the following relationship:

$$RGO = TCR \times (EPC/ELCR)$$

Where:

EPC is the concentration input into the scenario of interest;

ELCR is the calculated excess lifetime cancer risk for that EPC and that scenario;

RGO is the derived constituent concentration corresponding to the selected TCR and the scenario of interest; and

TCR is the selected target cancer risk (1×10^{-6}, 1×10^{-5}, and 1×10^{-4}).

The RGOs are presented in Table 6-33 for the site worker, Table 6-34 for the adolescent trespasser, Table 6-35 for the hypothetical future child resident, and Table 6-36 for the hypothetical future adult resident.

6.6 Uncertainty

The risk estimates presented here are conservative estimates of potential risks associated with exposure to constituents detected in the Site subsurface. Uncertainty is inherent in the risk assessment process, and a discussion of these uncertainties is presented in this section. Each of the three basic building blocks for risk assessment (data evaluation, exposure assessment, and toxicity assessment) contributes various uncertainties. Each of these uncertainties is accounted for by using conservative assumptions wherever site-specific data are unavailable.

6.6.1 Data Evaluation

The data evaluation step can lead to uncertainty in the risk estimates as discussed below.

6.6.1.1 Sample Location and Collection

This risk assessment is based on the assumption that the available monitoring data adequately describe the occurrence of constituents in media at the Site. Environmental sampling itself introduces uncertainty. This source of uncertainty can be reduced through a well-designed sampling plan, use of appropriate sampling techniques, and implementation of laboratory data validation and quality assurance and quality control (QA/QC). The risk assessment assumes the Site is appropriately characterized by the sampling plans used. Further, the data used in this report meet QA/QC requirements and are appropriate for use in a risk assessment.

6.6.1.2 Screening of Constituents of Potential Concern

Uncertainty is inherent in the selection of COPCs for the risk assessment. Eliminating constituents in the COPC screening process can lead to lower estimates of potential health effects than inclusion of all analytes. The screening concentrations used for the human health screening were accepted standards and very conservative values. COPCs based on residential screening values were used for both commercial and residential exposure scenarios. Additionally, all detected volatile constituents were carried through the risk assessment. Because of the conservative way in which screening was done, the possibility of overlooking a significant constituent is considered minimal.

6.6.2 Exposure Assessment

The exposure assessment contributes uncertainty to the risk assessment as well. The two exposure scenarios with the greatest estimated risks were hypothetical future scenarios with little likelihood of ever occurring (residential use of the Site). In addition, exposure intakes for soil were calculated based on the assumption that the current conditions would remain stable throughout the exposure period, even though natural attenuation processes are expected to reduce constituent concentrations over time. Although uncertainty is inherent in the exposure assessment, the exposure scenarios, the EPCs, and the receptor exposure assumptions were chosen to err on the side of conservatism potentially leading to an overestimation of potential risk.

6.6.2.1 Exposure Scenarios

Potential exposure scenarios contribute uncertainty to the risk assessment. Exposure scenarios were developed based on site-specific information, USEPA exposure guidance documents, and professional judgment.

6.6.2.2 Exposure Point Concentrations

Conservative EPCs were used in this risk assessment which leads to the overestimation of risk. EPCs were based on concentrations in soil, surface water, and sediment that were assumed to remain constant throughout the exposure period, which is a conservative approach. It is highly unlikely that receptors would be exposed to the same concentrations particularly over an extended period of time since ongoing natural attenuation and degradation processes are expected to reduce concentrations over time. EPCs were based on upper bound estimates which further overestimate the risk. Indoor air EPCs were calculated using the USEPA spreadsheets based on the Johnson and Ettinger model using conservative input parameters.

EPCs were calculated based on default model input parameters for a residential structure (e.g., building size, building pressure differential, air exchange rate, floor thickness, floor crack and seam sizes etc). This approach is considered conservative because a residential building is expected to overestimate potential EPCs in a commercial building.

6.6.3 Toxicity Assessment

The toxicity values and other toxicological information used in this report likewise are associated with significant uncertainty. Many toxicity values are developed using results of studies in which laboratory animals are exposed to massively high doses of particular constituents over an entire lifetime. As such, these studies do not represent realistic examples of environmental exposures. In addition, humans are different than laboratory animals. Many animals used for laboratory studies are genetically designed to be more sensitive than humans to specific compounds. In addition, the effects shown by the animals in the high-dose studies are often very different than effects reported by humans in parallel epidemiological studies. This is because a particular compound may have a different mechanism of action in laboratory animals than it does in humans. Even epidemiological studies, which are generally preferable to animal toxicity studies, are characterized by several uncertainties, such as differential exposures and unknown (and uncontrolled) doses.

Toxicity values are not available for dermal exposure. The USEPA recommended approach to derivation of dermal toxicity values based on available oral toxicity values and oral absorption efficiencies contributes considerable uncertainty to the risk assessment. In addition, toxicity values were not available for all of the COPCs. Therefore, exposure and risk could not be evaluated quantitatively for these COPCs. Uncertainty is also associated with constituent mixtures. Information on the toxicity of specific mixtures is rarely available.

The procedure generally applied to a potential event of simultaneous exposure to multiple constituents from a variety of sources assumes dose additivity, although it is possible that the interaction of multiple constituents could be synergistic or antagonistic.

6.6.4 Risk Characterization

Constituent-specific risks are generally assumed to be additive (USEPA 1989). Noncancer hazards are thought to be additive if they act on the same target organ. This oversimplifies the fact that some constituents may act synergistically (1 + 1 > 2) or antagonistically (1 + 1 < 2). The overall effect of these mechanisms on multi-constituent, multi-media risk estimates is difficult to determine, but the effects are usually assumed to balance.

While noncancer hazards are only to be added when the mechanism of action is the same, all noncancer hazards were added for each receptor in this assessment assuming that the mechanism of action or target organ was the same. This clearly is not the case. In doing so, the noncancer hazards are most likely overestimated.

6.7 Summary and Conclusions

The HHRA analysis found that only one exposure pathway exceeded the proposed facility acceptable total risk level of 1×10^{-5}. This target risk level was selected for this site because the current use of the site is as an active military base and the location of SWMU 39 is in an area of the post that is strictly commercial/industrial rather than residential. There are no plans to change land use around SWMU 39 in the foreseeable future. The GAEPD concurred with this evaluation (GAEPD 2014). The exposure pathway with the ELCR greater than this risk level was for a hypothetical future child resident as a result of direct contact with surface soil (0-1 ft bgs) and subsurface soil (1-8 ft bgs) in the event of soil inversion. All other calculated HIs and ELCRs are equal to or below either the proposed facility or GAEPD acceptable risk level. Nonetheless, remedial goals were calculated for soil based on a GAEPD (2014) for those constituents with an individual ELCR greater than 1×10^{-6}. As discussed in detail in Section 6.1.1.5, the groundwater pathway was not quantitatively evaluated as part of the HHRA. Instead, based on the historical concentrations of groundwater at the Site, remedial goals were conservatively set as the current USEPA MCLs.

7. Preliminary Ecological Risk Evaluation

As recommended by GAEPD guidance (1996), a Preliminary Risk Evaluation (PRE) was conducted for SWMU 39. The PRE is the initial ecological risk screening assessment at a RCRA facility (GAEPD 1996). The PRE consists of five steps:

i. Ecological screening value comparison,

ii. Preliminary problem formulation,

iii. Preliminary ecological effects evaluation,

iv. Preliminary exposure estimate, and

v. Preliminary risk calculation.

Ecological Screening Value Comparison

Data generated from the SWMU 39 site characterization activities were evaluated for use in the PRE. The data were evaluated following the USEPA guidance for data usability (USEPA 1992a). All surface soil data collected at depths less than one foot were included in the PRE dataset regardless of age. Sediment and surface water data from the 2011 sampling effort were used to represent conditions at the storm water ditch located adjacent to SWMU 39. For duplicate samples, the result used in the PRE was selected as follows: (1) if both samples reported positive detects, the higher measured analytical concentration was used, (2) if only one result was a positive detect, that concentration was used, or (3) if both samples reported non-detects, the lower SQL was used as the proxy concentration.

The surface soil, sediment, and surface water data were then summarized to identify the following descriptive statistics: the number of detects, the number of samples, the FOD, the minimum and maximum detected concentrations, the location of the maximum detected concentration, and the minimum and maximum reporting limits. Maximum concentrations were then compared against ecological screening values (ESVs) in accordance with GAEPD guidance (1996). ESVs are chemical concentrations in environmental media, below which there is negligible risk to receptors (USEPA 2000b). ESVs are based on conservative assumptions in order to ensure that the values are protective and applicable to a wide variety of sites, and as such provide a starting point for the PRE as they are generally considered to provide an indication of the worst-case measure of the potential for adverse impacts.

ESVs are generally based on effects such as mortality and reproductive impairment, and are assumed to be widely applicable to sites around the United States for screening purposes (USEPA 1997b). For most constituents and receptors, the data available to generate ESVs are limited and related to effects on individual organisms, rather than subpopulations or communities. Given these limitations, conservative assumptions are used to ensure that the ESVs are protective. Where ESVs are published, users are cautioned to recognize that such screening values do not constitute remediation goals, as they are sometimes based on highly conservative exposure assumptions and/or wildlife receptors that may not be applicable to a particular site. As such, their robustness and biological association with the assessment endpoint may be limited.

Per the GAEPD guidance (1996), maximum detected concentrations for each medium were compared to USEPA Region 4 ESVs, if available. For constituents that lack Region 4 ESVs, a hierarchy of other appropriate sources was used. The ESVs used in the PRE were from the following sources in order of priority:

- USEPA Region 4 Ecological Screening Values (R4 ESVs; USEPA 2001a).
- USEPA Region 5 Ecological Screening Levels (R5 ESLs; USEPA 2003b).
- USEPA Region 3 Ecological Screening Benchmarks (R3 ESBs; USEPA 2006).
- USEPA Ecological Soil Screening Levels (EcoSSLs; USEPA 2013d)
- GAEPD Water Use Classifications and Water Quality Standards (GAEPD 391-3-6-.03).

It should be noted that these values represent only highly conservative ESVs, as is appropriate for such a preliminary assessment. These ESVs do not represent the range of ESVs that are available from a variety of other regulatory and scientific sources.

Constituents present at maximum concentrations exceeding their ESVs were identified as constituents of potential ecological concern (COPECs). The results of the screening value comparison and COPEC identification are described by media below:

7.1.1 Surface Soil

The following constituents were present at maximum concentrations in soil that exceed the soil ESVs: anthracene, benzo(a)pyrene, fluoranthene, phenanthrene, pyrene, and chromium (Table 7-1), and therefore they were identified as soil COPECs.

7.1.2 Sediment

The following constituents were present at maximum concentrations in sediment that exceed the sediment ESVs: acetone, 4-methylphenol, and arsenic (Table 7-2), and therefore they were identified as sediment COPECs. The following constituents did not have identified ESVs and therefore were also identified as COPECs and carried forward in the PRE: cis-1,2-dichloroethene, benzaldehyde, and barium.

7.1.3 Surface Water

Caprolactam, lead, and mercury were identified as surface water COPECs. Caprolactam was considered a COPEC because it did not have an identified ESV. Lead and mercury were identified as COPECs because they were present at maximum concentrations exceeding ESVs (Table 7-3).

7.2 Preliminary Problem Formulation

The preliminary problem formulation presents the environmental setting and the preliminary identification of exposed receptors.

7.2.1 Environmental Setting

This section describes the ecological habitat at SWMU 39 based on observations made by ARCADIS personnel during numerous site visits conducted in 2010 and 2011. There is very little natural ecological habitat associated with SWMU 39. As previously mentioned, SWMU 39 is approximately 10 acres and is almost completely covered with concrete and is fenced. Therefore, evaluation of soil samples presented in this PRE assumes hypothetical future conditions at SWMU 39 in the event the concrete cover is removed and soil is left exposed. If site is left undeveloped, the terrestrial habitat most likely will eventually become comprised of evergreen and deciduous plant species, typical of the marshy woodlands of the Coastal Plains. Common fauna that may be expected to occur would include earthworms and other soil-dwelling invertebrates, birds such as robins, and mammals such as gray squirrel, shrews, rabbits, and raccoons.

The storm water drainage ditch associated with SWMU 39 runs for approximately 1500 ft along the northwest portion of the fence. The ditch is around 3 ft wide and varies in depth from approximately 3 to 7 ft, with the deeper end near the northwest portion of SWMU 39. The water in the ditch is less than one foot deep with very little flow. This ditch receives drainage both from the parking area at SWMU 39 and from surrounding areas. Flow in the ditch is governed by precipitation runoff and discharge water from military vehicle washing. This ditch is typically stagnant during base-flow conditions. Storm water in the ditch flows northwest through a system of drainage canals present throughout the southern portion of Fort Stewart. The canals channel water northwest before emptying into Mill Creek and the Canoochee River floodplain.

The cycling of dry channel conditions with precipitation and discharge-fed wet channel periods prevents establishment of a robust aquatic community typical of a perennial water body. To support this conclusion, vegetation growing in the ditch appears to be terrestrial, not wetland or aquatic rooted vegetation. This indicates that the ditch only temporarily and sporadically contains surface water. As a result, the ditch is considered an intermittent drainage conveyance providing essentially no viable aquatic habitat.

7.2.2 Description of Potentially Exposed Receptors

Potentially exposed receptors are designated based on the available habitat associated with a site, which is terrestrial habitat only as discussed above. Potentially exposed receptors in the vicinity of SMWU 39 include terrestrial wildlife (i.e., mammals, birds, reptiles, and invertebrates), and terrestrial plants. SWMU 39 is almost entirely covered with concrete and soil samples were all obtained from beneath the covered area. Wildlife receptors could only get exposed to surface soil represented by site data in the event the concrete is removed during future redevelopment.

As part of the identification of potentially exposed receptors, it is necessary to identify protected species that may be exposed to site constituents. The listings of threatened and endangered as well as tracked, rare, and unusual species were obtained from the Georgia Department of Natural Resources (GADNR 2012) and the U.S. Fish and Wildlife Service (USFW 2012) online databases for Liberty County. Several species of threatened or endangered species were identified for Liberty County (Attachment K). However since the terrestrial habitat at SWMU 39 is currently non-existent and the storm water ditch is not consider to present viable aquatic habitat, the habitat present at SWMU 39 is not suitable to support any threatened or endangered species (Appendix L).

7.3 Preliminary Ecological Effects Evaluation

In this step of the evaluation, a broader range of soil ESVs were identified than were initially used in the screening value comparison step. This methodology is consistent with the approach for "incremental iteration of exposure, effects, and risk characterization" (USEPA 2001a, 1997b). Efforts to obtain a broader range of ESVs included searching sources from USEPA (2013d), Oak Ridge National Laboratory (ORNL: Sample *et al.* 1996, Efroymson *et al.* 1997a,b).

Soil ESVs used in this step of the PRE were based on USEPA EcoSSLs (USEPA 2005,b,c,d, 2007b). Since a few PAHs were identified as soil COPECs, the potential additive toxicological effects of PAHs were considered. An association between toxicological behavior and molecular weight of PAHs has been shown. Therefore, to evaluate the effects of the PAH mixtures, the sums of low molecular weight PAHs (LPAHs) and high molecular weight PAHs (HPAHs) were calculated by summing the detected concentrations and one half the detection limits for non-detected PAHs.

7.4 Preliminary Exposure Estimates

The preliminary exposure estimates were based on the EPCs in environmental media at SWMU 39. USEPA (1989) defines the EPC as "the arithmetic average of the concentration that is contacted over the exposure period." To ensure that the estimate of the average (or mean) is conservative and not underestimated, USEPA (1989, 1992) recommends using the an upper confidence limit of the mean (e.g., 95%) as an estimate for the EPC. Statistical software provided by USEPA (i.e., ProUCL) has, to some extent, automated the process of calculating UCLs and selecting the most representative statistic based on characteristics of the data set such as sample size, measures of variance, and FOD. The most recent available version of the ProUCL software (version 4.1 USEPA 2011) was utilized to calculate EPCs for some COPECs evaluated in the PRE. Where the dataset was not suitable for calculating a UCL (less than 8 samples or 5 detected results), the maximum concentration was used as the EPC.

7.5 Preliminary Risk Calculation

The preliminary risk calculations provide an estimate of potential risk to ecological receptors. Risks to ecological receptors are calculated by dividing the exposure estimates (i.e., EPCs) by the ESVs to determine a HQ. HQs equal to or less than a value of 1 (to one significant figure) indicate that adverse ecological impacts are unlikely (USEPA 1997b). HQs greater than 1 indicate that further evaluation is warranted. In addition, the HQs were

also considered within the context of weight-of-evidence and ecological significance of the risk estimates.

A weight-of-evidence approach is a means to evaluate the value of the information provided by measurement endpoints and observations made about a site (Menzie *et al.*, 1996). Weight-of-evidence discussion can help answer the questions "how reliable are the predictions made?" and "which predictions provide greater value for risk management decision making?" This approach is particularly useful when conflicting predictions of risk are obtained. A weight of evidence approach was used in conjunction with the HQs, and an understanding of the ecological significance of SWMU 39 based on field observations, to make conclusions regarding risk characterization.

The ecological significance of risk estimates was evaluated by assessing issues related to ecological significance as outlined by USEPA (USEPA 1994). This information includes a general flowchart of considerations that leads to the identification of ecologically significant impacts, and to the identification of those that are not ecologically significant. These considerations include the spatial extent of the release, the persistence of the release (i.e., the temporal scale), and natural variability within the system (and whether impacts can be measured separate from natural variability). This type of analysis was used in conjunction with the HQs to evaluate whether predicted impacts (if any) were considered ecologically significant.

The following constituents were identified as soil COPECs: anthracene, benzo(a)pyrene, fluoranthene, phenanthrene, pyrene, and chromium (Table 7-1). As previously mentioned, to address the additive effects of PAHs the risk was evaluated based on total LPAHs and HPAHs. The ESVs used to estimate risk in soil were all based on USEPA's EcoSSLs (USEPA 2005b,c, 2007b).

The preliminary risk characterization for surface soil is presented in (Table 7-4). Plant ESVs were not available, therefore HQs for plants were not calculated. The HQs for chromium for both avian and mammalian receptors were less than 1 at 0.2; therefore chromium in soil is not expected to result in adverse effects for terrestrial receptors and was not evaluated further. Invertebrate HQs for LPAH and HPAH were less than one at 0.03 and 0.1, and likewise the mammalian HQ for LPAHs (0.008) was less than 1. However the mammalian HQ for HPAHs (2) was greater than one. A detailed review of the data shows that two locations in particular have PAHs at concentrations that exceed the EcoSSL for mammalian receptors and those are: SB010 and SB013. Those samples reflect an area that is approximately 3500 square ft (or less than 0.1 of an acre) It is important to note that because those locations are currently covered by concrete there is no current risk to

receptors, and there are no redevelopment plans that would leave those areas exposed in the future, risk is unlikely.

However, even if future soil exposure were to occur, adverse impacts to ecological receptors from PAHs in soil would be unlikely due to the limited number of locations with HQs >1, and the area with concentrations exceeding ESVs (i.e., less than 0.1 acre) is less than the *de minimis risk* areal extent typically used in ecological risk assessments of 1 to 2 acres (Suter et al. 1995; Henning and Shear 1998; Efroymson et al. 2003). The *de minimis risk* extent criterion can be applied if the following conditions are met:

- Similar but un-impacted habitat must be available adjacent to the impacted area;
- Sensitive habitat must not be present within ¼ mile if the COPECs will migrate off site; and
- COPEC fate and transport must be unlikely to increase the spatial extent to greater than 1 acre.

The three conditions apply to the area with limited PAH impacts in soil (i.e., HQ greater than 1): 1) Similar but unimpacted habitat (HQs less than 1) is available adjacent to the impacted area (area with HQs greater than 1) at the site, 2) sensitive habitat is not be present within 0.25 mile., 3) and finally the spatial extent of PAHs is not likely to increase. Therefore, population level ecological effects are considered *de minimis*.

7.6 Results and Conclusions

The HQs calculated in the PRE were considered within the context of other available information such as the basis for the ESV, additional screening values, the quality and size of habitat, and within the context of the weight-of-evidence and ecological significance of the risk estimates. ESVs used to calculate HQs were conservative screening values and as such overestimate risk.

Results indicate that all calculated HQs for COPECs in soil were below one with the exception of the HQ for HPAHs for mammalian receptors which was only slightly above 1 (i.e., 2). Two sample locations in particular had PAHs at concentrations that exceed the EcoSSL for mammalian receptors and those are: SB010 and SB013. Those samples reflect an area that is approximately 3500 square ft (or less than 0.1 of an acre) that is currently covered by concrete and there are no redevelopment plans that will leave those areas exposed. Based on the limited number of locations with HQs >1, the small size of the area with elevated concentrations (less than 0.1 acre) which is less than the *de minimis* risk

extent typically used in ecological risk assessments, and the fact that that area is covered and there are no plans for redevelopment, adverse impacts are unlikely to occur for ecological receptors potentially exposed in the future to PAHs in the soil. Therefore, no further ecological assessment is considered necessary.

8. Conclusions and Recommendations

ARCADIS has been retained by the USAEC to perform investigation and remediation activities at Fort Stewart in accordance with the requirements of the PBC number W91ZLK-05-D-0015. Investigations of the soil, groundwater, surface water, and sediment have been ongoing at this facility since 2001. During the investigations, LNAPL, believed to be waste oil, was detected near Building 1161 and former UST 61. Excavations were conducted in 2006 and 2007 to remove the LNAPL and any impacts to soil. In April 2008, LNAPL was detected again in an additional monitor well near Building 1161. In addition to LNAPL, historical groundwater investigations identified a diffuse chlorinated VOC plume, consisting primarily of PCE and TCE. The reported April 2008 TCE concentrations were low with a maximum detection of 27 µg/L. However, the extent of groundwater impacts were not fully delineated. Additional investigations were conducted between 2010 and 2011. The objectives of the additional investigations were to delineate impacted soil and groundwater, evaluate potential impacts to sediment and surface water, investigate potential source areas for the impacts to groundwater, and evaluate potential risks to human health and ecological receptors. This RFI Report is submitted to summarize the 2010 and 2011 investigations and describe the nature and extent of potential releases of constituents as defined by RFI activities conducted from 2001 through 2011. The report interprets these data as they relate to horizontal and vertical delineation of constituents, potential migration of constituents, and potential impacts to human health and the environment.

8.1 Conclusions

The data collected between 2001 and 2011 was used to sufficiently characterize the impacts at SWMU 39. A human health risk assessment was conducted and the results indicated that only one exposure pathway exceeded the proposed facility acceptable risk level of 1×10^{-5}. The exceeding pathway was the ELCR for a hypothetical future resident as a result of direct contact with surface soil (0-1 ft bgs). All other calculated HIs and ELCRs are below either the proposed facility or the GAEPD acceptable risk levels. The groundwater pathway was not quantitatively evaluated as part of the HHRA. Instead, based on the historical concentrations of groundwater at the Site, remedial goals were conservatively set as the current USEPA MCLs. An ecological risk assessment was conducted and concluded that adverse impacts to terrestrial wildlife from potential exposure to constituents in soil are unlikely.

8.1.1 Physical Data

SWMU 39 is located near the intersection of Sigma Street and Alexander Stevens Road in the southwest portion of the Fort Stewart Garrison Area near Building 1160 (DSMF). The DSMF is a fenced facility with controlled access covering an area of approximately ten (10) acres. The majority of this area is covered with concrete. Historically the area was used as a vehicle wash/service rack. Former USTs 59 and 60, and their associated HOTs were west of Building 1160, at the tracked vehicle maintenance platforms (Buildings 1161 and 1163). The HOTs provided fuel oil to a high-pressure washer at the platform. USTs 59 and 60, were 4,000 gallon concrete storage tanks that stored used oil beneath the M60 maintenance platforms. An additional 500 gallon UST (61) was located immediately southeast of the tracked vehicle maintenance platform (Building 1161) and was used for the storage of used oil. The two HOTs plus the two 4,000 gallon concrete USTs (59&60) were filled with grout and closed-in-place.

Surrounding the fenced area along the southern and eastern sides of the Site is undeveloped land covered with grass, some shrub vegetation, and pine trees. A drainage ditch runs along the south and southwest portion of the fence. The ditch is approximately three (3) ft wide and varies in depth from approximately three (3) ft to seven (7) ft; the depth of the ditch continues to increase in the northwest direction. The water in the ditch is less than one (1) foot deep with very low flow. Railroad lines are located south and southeast of the DSMF with an existing spur line adjacent to the drainage ditch along the southern side of the fence.

Soil borings advanced throughout SWMU 39 and other upgradient areas indicate that the subsurface is predominantly silty fine-grained sand with occasional lenses of clay, and coarse sand at thicknesses ranging between two (2) inches and two (2) ft. Clay lenses are most prevalent in the eastern portion of the Site near F39TW11. Regional geologic data suggest a competent confining unit is present at depth, but current investigations have not encountered this unit.

Slug tests performed at five monitor wells in January 2011 returned hydraulic conductivity values that ranged from 10^{-3} to 10^{-5} cm/sec. Groundwater generally flows to the northwest. Based on water levels collected in May 2011, the water table averages 6.66 ft bgs throughout the Site, with the deepest level being 12.75 ft bgs at G4MW048 and the shallowest level being 3.00 ft bgs at G4MW034.

8.1.2 Analytical Data

8.1.2.1 Soils

Between 2004 and 2011, ten (10) surface soil and thirty-five (35) subsurface soil samples were collected within the fenced DSMF area. The DSMF is a paved area, so the surface soil samples were collected immediately below the concrete. Subsurface soil samples were collected at various depths up to ten (10) ft bgs.

The 2004 samples indicated low level VOC impacts in the subsurface soil exceeding the SSL. The majority of the impacts were in samples collected below six (6) ft bgs. The groundwater table at SWMU 39 is approximately 6.66 ft bgs. It is believed that the samples collected were saturated soil samples and are more indicative of groundwater concentrations.

The 2010 surface soil samples reported low level PAHs above the RSL and SSL. The highest detections were detected just below the concrete pad along the southwest side of Building 1160 in borings F39SB013 and F39SB010. Surrounding samples were non-detect for PAHs. The F39SB010 subsurface soil sample reported decreasing concentrations with depth with exccedances of the risk based SSL for benzo(a)anthracene and benzo(b)fluoranthene.

Several metals were detected in the surface soil and subsurface soil samples at concentrations similar to background levels. Lead was detected in the surface soil sample collected at F39SB009 at a concentration of forty-three (43) mg/kg above the background concentration of 8.81 mg/kg and the MCL based SSL of fourteen (14) mg/kg. The subsurface soil sample collected at the same location from 3 to 3.5 ft bgs was below the background value at a concentration of 5.4 mg/kg. No metals were detected in subsurface soils at concentrations exceeding the background concentrations.

8.1.2.2 LNAPL

LNAPL associated with historical maintenance operations at Buildings 1161 and 1163, has been detected in G4MW002 since 2002. In March 2010, LNAPL was also detected in nearby monitor well G4MW001. During the March/April 2010 investigations, eight (8) soil borings were collected around the G4MW002 and G4MW001 area to evaluate the extent of LNAPL. No LNAPL was observed in the soil borings indicating the LNAPL is localized near G4MW001 and G4MW002 (Figure 5-5). Free product was measured at 0.65 ft thick in G4MW001 and 3.26 ft thick in G4MW002 during the May 2011 measurement event.

8.1.2.3 Groundwater

Historical groundwater investigations reported low level VOC detections in the shallow groundwater. In 2010, additional investigations were initiated to delineate the impacts to shallow groundwater and investigate potential sources of the impacts. Between 2010 and 2011, 95 VAP groundwater samples were collected and twenty-six (26) new monitor wells were added to the monitoring network. The VAP samples provided screening level data to evaluate potential source areas and the extent of impacts. Based on the VAP, an area of higher level TCE, PCE and DCE concentrations in deeper groundwater was identified upgradient of the DSMF. The VAP samples were used to determine the approximate extent of impacts and where additional monitor wells were required to monitor the groundwater quality.

The 2010 and 2011 groundwater investigations provided confirmation of a diffuse low-level PCE and TCE (<100 ug/L) plume is present across much of site with a concentrated PCE and TCE plume (>1,000 ug/L) near G4MW041. The majority of the additional wells were installed along the periphery of the chlorinated VOC plume to provide delineation of the groundwater impacts. Benzene was also detected above the RSL and MCL. The detections appear to be localized to two well locations with concentrations in nearby monitor wells either below screening criteria or below detection.

No definitive source was identified for the groundwater impacts, however, informal conversations with site personal revealed that spent solvents from a former electronic repair may have been disposed of in the sewer lines near Building 1065, the area where the highest impacts have been detected. Utility maps for the area confirm the presence of sewer and water lines where the spent solvents were reportedly disposed. In addition, during the October 2010 MIP/VAP investigation near the southern corner of Building 1065, a concrete utility pipe was detected approximately 9.5 ft bgs. The location of the pipe is consistent with the location of water or sewer lines shown on the utility maps. The groundwater impacts have been delineated and appear to initiate close to where the spent solvents were reportedly disposed. It is believed that the sewer lines leaked over time, creating the higher level VOC plume in deep groundwater. These sewer lines may have also contributed to the lower level PCE and TCE detections across the Site by providing a pathway for contaminant migration. Both water and sewer lines were identified in the area traveling west towards the DSMF.

8.1.2.4 Surface Water and Sediment

In 2004, one surface water and one sediment sample along with duplicate samples, were collected from the drainage ditch along the DSMF fenced area and analyzed for VOCs. In 2010, eight (8) additional surface water samples and seven (7) additional sediment samples were collected from the drainage ditch and analyzed for VOCs, SVOCs and metals. The surface water and sediment samples identified low level SVOC and VOC concentrations below the screening criteria in the drainage canal along the southern edge of the Direct Support Maintenance Facility. Soap suds have been observed in the drainage canal which is most likely related to vehicle washing at the Maintenance Facility. Lead and mercury were also detected in the surface water above the IWQS and arsenic was detected in the sediment above the residential soil RSL. Historically arsenic and lead have been used in pesticides, railway ties, and slag that was used as railway bed fill. Based on the close proximity of the rail lines to the drainage canal, it is believed that the metals detected in surface water and sediment are related to the rail lines and are not associated with the historical activities at SWMU 39.

8.1.3 Human Health Risk Assessment

An HHRA was conducted to evaluate the potential current and hypothetical future risks and potential hazards to human health associated with constituents detected in surface and subsurface soil, groundwater, sediment and surface water samples collected at SWMU 39. Twenty-nine COPCs were identified based on detections in surface soil, subsurface soil, combined surface and subsurface soil, sediment, or surface water. The exposure scenarios quantitatively evaluated included exposure to soil by current and future site workers, current and hypothetical adolescent trespasser, hypothetical construction worker, and hypothetical future adult and child resident; exposure to indoor air by a current and future site worker and a hypothetical future adult and child resident; and exposure to sediment and surface water by current and hypothetical future trespasser.

The groundwater analytical data were reviewed and compared to the USEPA tap water RSLs and the drinking water standards. Based on this evaluation, it was determined that use of the groundwater as a potable water supply would yield an unacceptable risk and/or hazard. The constituents that were present in groundwater above their USEPA tap water RSLs also have established federal drinking water standards or MCLs, with the exception of bis(2-chloroisopropyl)ether which was detected on two occasions at a concentration approximately equal to the USEPA tap water RSL (0.00034 mg/L vs. 0.00031 mg/L); therefore, this constituent would not be evaluated further if exposure to groundwater was evaluated in the HHRA . However, since MCLs are available for all constituents that would

pose a risk or hazard if exposure to groundwater were evaluated quantitatively in the risk assessment, MCLs were selected as the remedial goals for the groundwater constituents and exposure to groundwater was not evaluated further. Cancer risks and noncancer hazards were calculated for each potentially or hypothetically exposed receptor included in the risk assessment. With the exception of the hypothetical future child resident exposure to surface soil and subsurface soil, all ELCR values were less than or equal to the proposed facility acceptable risk level of 1×10^{-5}. The exceeding pathway was the ELCR for a hypothetical future child resident as a result of direct contact with surface soil (0-1 ft bgs) and subsurface soil (1-8 ft bgs). All other calculated HIs and ELCRs are below either the proposed facility or the GAEPD acceptable risk levels. The GAEPD (2014) agreed that a target risk level of 1×10^{-5} was appropriate for this site because the current use of the site is as an active military base and the location of SWMU 39 is in an area of the post that is strictly commercial/industrial rather than residential. There are no plans to change land use around SWMU 39 in the foreseeable future.

8.1.4 Ecological Risk Assessment

A PRE was conducted for SWMU 39. SWMU 39 is approximately ten (10) acres and is almost completely covered with concrete and is fenced. Therefore, evaluation of soil samples presented in the PRE assumed hypothetical future conditions at SWMU 39 in the event the concrete cover is removed and soil is left exposed. If the site is left undeveloped, the terrestrial habitat most likely will eventually become comprised of evergreen and deciduous plant species, typical of the marshy woodlands of the Coastal Plains. Common fauna that may be expected to occur would include earthworms and other soil-dwelling invertebrates, birds such as robins, and mammals such as gray squirrel, shrews, rabbits, and raccoons.

The storm water drainage ditch associated with SWMU 39 runs for approximately 1500 ft along the northwest portion of the fence. The ditch is around three (3) ft wide and varies in depth from approximately three (3) to seven (7) ft, with the deeper end near the northwest portion of SWMU 39. The water in the ditch is less than one foot deep with very little flow. This ditch receives drainage both from the parking area at SWMU 39 and from surrounding areas. Flow in the ditch is governed by precipitation runoff and discharge water from military vehicle washing. This ditch is typically stagnant during base-flow conditions. Storm water in the ditch flows northwest through a system of drainage canals present throughout the southern portion of Fort Stewart. The canals channel water northwest before emptying into Mill Creek and the Canoochee River floodplain.

The cycling of dry channel conditions with precipitation and discharge-fed wet channel periods prevents establishment of a robust aquatic community typical of a perennial water body. To support this conclusion, vegetation growing in the ditch appears to be terrestrial, not wetland or aquatic rooted vegetation. This indicates that the ditch only temporarily and sporadically contains surface water. As a result, the ditch is considered an intermittent drainage conveyance providing essentially no viable aquatic habitat.

The PRE evaluated constituents detected in surface soil (0-1 ft bgs). Anthracene, benzo(a)pyrene, fluoranthene, phenanthrene, pyrene, and chromium were identified as COPECs in surface soil. Results of the PRE indicate that all calculated HQs for COPECs in soil were below one with the exception of the HQ for HPAHs for mammalian receptors which was only slightly above 1 (i.e., 2). Two sample locations in particular had PAHs at concentrations that exceed the EcoSSL for mammalian receptors and those are: SB010 and SB013. Those samples reflect an area that is approximately 3500 square ft (or less than 0.1 of an acre) that is currently covered by concrete and there are no redevelopment plans that will leave those areas exposed. Based on the limited number of locations with HQs >1, the small size of the area with elevated concentrations (less than 0.1 acre) which is less than the *de minimis* extent typically used in ecological risk assessments, and the fact that that area is covered and there are no plans for redevelopment, adverse impacts are unlikely to occur for ecological receptors potentially exposed in the future to PAHs in the soil. Therefore, no further ecological assessment is considered necessary.

8.2 Recommendations

The data collected during the RFI for SWMU 39, along with the evaluations and risk assessments indicate the potential impacts to the environment by past activities at the Site have been fully characterized, and delineated where necessary, in surface soil, subsurface soil, groundwater, sediment, and surface water.

Surface soil and LNAPL in the DSMF area and constituents exceeding USEPA MCLs in groundwater were identified as potential risks requiring further evaluation. The following constituents were detected above their respective MCLs in groundwater in 2011:

- Benzene
- PCE
- TCE
- DCE
- bis(2-chloroisopropyl)ether
- Total Chromium
- Total and Dissolved Lead

- Total and Dissolved Arsenic
- Total Mercury
- VC

Bis(2-chloroisopropyl)ether was only detected on two occasions at a concentration approximately equal to the USEPA tap water RSL (0.00034 mg/L vs. 0.00031 mg/L). Similarly, total mercury and total chromium were only detected on two occasions. In each instance, the concentrations only slightly exceeded the MCL and the dissolved concentration was well below the MCL or not detected above the reporting limit. Lead was detected once in dissolved form at a concentration slightly exceeding the MCL (0.017 mg/L vs. 0.015 mg/L). Consequently, Fort Stewart recommends no further evaluation for bis(2-chloroisopropyl)ether, mercury, chromium, and lead in groundwater.

Based on the results of the RFI and conclusions regarding the nature and extent of contamination, human health and ecological risk, Fort Stewart submits the following recommendations for consideration by the GAEPD:

- The RFI has been completed, and the potential impacts to the environment by past activities at SWMU 39 have been sufficiently characterized and delineated where necessary in groundwater, surface soils, subsurface soils, sediment, and surface water.

- Arsenic and VOCs, in particular groundwater concentrations for PCE, TCE, DCE, and Benzene in select monitor wells exceeded their respective MCL. Concurrent to the review and approval of the RFI, a Corrective Action Plan (CAP) should be prepared to evaluate potential remedial alternatives to address impacts to groundwater at SWMU 39.

- LNAPL was detected in monitor wells G4MW001 and G4MW002. An evaluation of potential remedial alternatives to recover LNAPL near G4MW001 and G4MW002 will be included within the CAP.

- Low level PAHs have been detected in the surface and subsurface soil near monitor wells G4MW001 and G4MW002. An evaluation of potential remedial alternatives for low level PAH detections in soil will be included within the CAP.

- Low level metals were detected in surface water and sediment in the drainage ditch next to the DMSF. It is believed that these are related to the adjacent rail line and not associated with the activities at SWMU 39. Fort Stewart recommends no further evaluation of the surface water and sediment.

- SWMU 39 does not present a risk to the environment in its current use nor does it present a future risk in the unlikely event the SWMU usage were to be changed. Therefore, there are no corrective actions necessary for ecological risk at SWMU 39.

9. References

ARCADIS 2010. SWMU 39 RCRA Facility Investigation Work Plan, Direct Support Maintenance Facility, Fort Stewart, Georgia, Revision 1. June.

Efroymson, R.A., M.E. Will, G.W. Suter II, and A.C. Wooten. 1997a. Toxicological Benchmarks for Screening Contaminants of Potential Concern for Effects on Terrestrial Plants: 1997 Revision. Oak Ridge National Laboratory, Oak Ridge, TN. 128 pp. ES/ER/TM-85/R3.

Efroymson, R.A., M.E, Will, and G.W. Suter II. 1997b. Toxicological Benchmarks for Contaminants of Potential Concern for Effects on Soil and Litter Invertebrates and Heterotrophic Processes: 1997 Revision. Oak Ridge National Laboratory, Oak Ridge TN. ES/ER/TM-126/R2.

Efroymson, R.A., J.P. Nicolette, and G.W. Suter. 2003. A Framework for Net Environmental Benefit Analysis for Remediation or Restoration of Petroleum-Contaminated Sites. ORNL/TM-2003/17.

Freeze, Allan R. and Cherry, John A. 1979. Groundwater. Englewood Cliffs, NJ: Prentice Hall. 604 pp.

Georgia Environmental Protection Division (GAEPD) 1996. Guidance for Selecting Media Remediation Levels at RCRA Solid Waste Management Units. Georgia Environmental Protection Division, Hazardous Waste Management Branch, Atlanta, Georgia. November.

Georgia Environmental Protection Division (GAEPD). 2001. Rules of the Georgia Department of Natural Resources, “Petroleum Constituents and Soil Threshold Levels,” Chapter 391-3-15-.09. October.

Georgia Environmental Protection Division (GAEPD). 2011. Water Use Classifications and Water Quality Standards (GAEPD 391-3-6-.03). http://rules.sos.state.ga.us/docs/391/3/6/03.pdf

Georgia Environmental Protection Division (GAEPD). 2014. Comment Letter on Revised Final SWMU 39 RCRA Facility Investigation Report, Direct Support Maintenance Facility [Solid Waste Management Unit (SWMU) 39], Fort Steward, Georgia, dated January 2014 and received February 7, 2014; EPA ID No. GA9 210 020 872, March 31.

Georgia Department of Natural Resources (GADNR). 2012. Protected Species List by County (October 2011 database), online at http://www.georgiawildlife.com/node/1370

Gonthier, Gerard J., Summary of Hydrologic testing of the Floridan Aquifer Syste, at Fort Stewart, Georgia. USGS Open-File Report 2011-1020.

HAZWRAP and Earth Tech 1998. Final Underground Storage Tank/In Place Closure Report. May 1998.

Henning, M., and N. Shear. 1998. Regulatory perspectives on the significance of ecological changes as reported in ecological risk assessments. Human and Ecological Risk Assessment, 4(4)807-814.

Menzie, C.A., M. Hope Henning, J. Cura, K. Finkelstein, J. Gentile, J. Maughan, D. Mitchell, S. Petron, B. Potocki, S. Svirsky, P. Tyler. 1996. Special report of the Massachusetts weight-of-evidence workgroup: A weight-of-evidence approach for evaluating ecological risks. Human and Ecological Risk Assessment: (HERA): 2(2)277-304.

Metcalf & Eddy 1996. Final Work Plan for RCRA Facility Investigation at Bulk Fuel Storage Systems Wright Army Airfield, Fort Stewart, Georgia.

National Oceanic and Atmospheric Administration (NOAA). 1998. NOAA Satellites and Information. Wind-Average Speed (MPH). Available at: http://ols.nndc.noaa.gov/plolstore/plsql/olstore.prodspecific?prodnum=C00095-PUB-A0001#TABLES.

Oak Ridge National Laboratory. (ORNL). 2013. The Risk Assessment Information System (RAIS). Available at: http://rais.ornl.gov/home/about.html.

Science Applications International Corporation (SAIC). 2000. Phase II RCRA Facility Investigation Report for 16 Solid Waste Management Units, Fort Stewart, Georgia. April.

Sample, B.E., Opresko, D.M., Suter II, G. W. 1996. Toxicological Benchmarks for Wildlife, 1996 Revision. USDOE, Risk Assessment Program, Health Sciences Research Division, Oak Ridge National Laboratory, Oak Ridge, Tennessee.

Solutions to Environmental Problems, Inc. (STEP) 2002. Master Field Report for Non-regulated Underground Storage Tanks (USTs) and Former Heating Oil Tanks (HOTs) at Groups I, II, III, IV, and V, Fort Stewart, Georgia, April 2002.

SpecPro Environmental Services LLC (SES) 2008. Final Resource Conservation and Recovery Act Facility Investigation and Interim Actions Report for Solid Waste Management Unit 39, Fort Stewart, Georgia. December 2005 Revised May 2008.

STEP 2003. Final Resource Conservation and Recovery Act, Facility Investigation Report for Solid Waste Management Unit 39, Fort Stewart, Georgia, April 2003.

STEP 2007. Final Report for Interim Removal Action at Solid Waste Management Unit 39, Underground Storage Tanks 59 and 60, Fort Stewart, Georgia, January 2007.

Suter, G.W., B.W. Cornaby, C.T. Hadden, R.N. Hull, M. Stack, and F.A. Zafran. 1995. An approach for balancing health and ecological risks at hazardous waste facilities. Risk Analysis, 15(2) 221-231.

U.S. Environmental Protection Agency (USEPA). 1988. Superfund Exposure Assessment Manual. Office of Remedial Response, Washington, DC. EPA/540/1-88/001. April.

U.S. Environmental Protection Agency (USEPA). 1989. Risk Assessment Guidance for Superfund, Human Health Evaluation Manual, Volume 1, Part A. Interim Final. Office of Emergency and Remedial Response, Washington, DC. EPA/540/1-89/002. December.

U.S. Environmental Protection Agency (USEPA) 1991. Risk Assessment Guidance for Superfund, Volume 1: Human Health Evaluation Manual, Supplemental Guidance, Standard Default Exposure Factors, Interim Final, OSWER Directive No. 9285.6-03, March 25.

U.S. Environmental Protection Agency (USEPA). 1992a. Guidance for Data Usability in Risk Assessment (Part A). Office of Emergency and Remedial Response. Publication 9285.7–09A. PB92-963356. http://www.epa.gov/superfund/programs/risk/datause/parta.htm.

U.S. Environmental Protection Agency (USEPA). 1992b. Guidelines for Exposure Assessment. 600Z-92/001. U.S. Environmental Protection Agency, Risk Assessment Forum, Washington, DC, May.

U.S. Environmental Protection Agency (USEPA). 1994. Ecological risk assessment issues papers. U.S. EPA, Washington, D.C. EPA/630/R94/009

U.S. Environmental Protection Agency (USEPA) 1997a. Health Effects Assessment Summary Tables, FY-1997 Update. Office of Research and Development and Office of Emergency and Remedial Response, Washington, DC. EPA 540/R-97-036. NTIS No. PB97-921199. July.

U.S. Environmental Protection Agency (USEPA) 1997b. Ecological Risk Assessment Guidance for Superfund – Process for Designing and Conducting Ecological Risk Assessments. Environmental Response Team. June 1997.

U.S. Environmental Protection Agency (USEPA) 1998. Guidelines for Ecological Assessment. Office of Research and Development, EPA/630/R-95/002FA, April 1998.

U.S. Environmental Protection Agency (USEPA) 1999. Issuance of Final Guidance: Ecological Risk Assessment and Risk Management Principles for Superfund Sites. Memorandum from Stephen D. Luftig, Director of the Office of Emergency and Remedial Response. Dated October 7, 1999. http://www.epa.gov/superfund/programs/risk/ecorisk/final99.pdf

U.S. Environmental Protection Agency (USEPA). 2000a. Risk Characterization Guidance. EPA 100-B-00-002. U.S. Environmental Protection Agency, Office of Science Policy. December.

U.S. Environmental Protection Agency (USEPA). 2000b. Amended Guidance on Ecological Risk Assessment at Military Bases: Process Considerations, Timing of Activities, and Inclusion of Stakeholders. Memorandum from Ted W. Simon, Ph.D., Office of Technical Services. June 23. http://risk.lsd.ornl.gov/homepage/ecoproc2.pdf

U.S. Environmental Protection Agency (USEPA). 2000c. Supplemental Guidance to RAGS: Region 4 Bulletins. Human Health Risk Assessment, Interim, Office of Health Assessment, Atlanta, Georgia.

U.S. Environmental Protection Agency (USEPA). 2001a. ECO-Update: Role of Screening-level Risk Assessments and Refining Contaminants of Concern in Baseline Ecological Risk Assessments. Accessed 2001. http://www.epa.gov/superfund/programs/risk/ecoup/slera0601.pdf

U.S. Environmental Protection Agency (USEPA). 2001b. Region 4 Ecological Risk Assessment Bulletins - Supplement to RAGS. http://www.epa.gov/region4/waste/ots/ecolbul.htm

U.S. Environmental Protection Agency (USEPA). 2002a. Calculating Upper Confidence Limits for Exposure Point concentrations at Hazardous Waste Sites. OSWER 9285-6-10. December.

U.S. Environmental Protection Agency (USEPA). 2002b. Supplemental Guidance for Developing Soil Screening Levels for Superfund Sites. Solid Waste and Emergency Response, Washington, DC. OSWER 9355.4-24. December.

U.S. Environmental Protection Agency (USEPA). 2003a. Human Health Toxicity Values in Superfund Risk Assessments. Memo from Michael B. Cook. U.S. Environmental Protection Agency, Office of Superfund Remediation and Technology Innovation. Office of Solid Waste and Emergency Response Directive (OSWER). Directive 9285.7-53. December. Available at: http://www.epa.gov/oswer/riskassessment/pdf/hhmemo.pdf

U.S. Environmental Protection Agency (USEPA). 2003b. Region 5 Ecological Screening Levels. August. http://www.epa.gov/Region5/rcraca/edql.htm

U.S. Environmental Protection Agency (USEPA). 2004a. User's Guide for Evaluating Subsurface Vapor Intrusion into Buildings. Office of Emergency and Remedial Response, Washington, DC. June 19.

U.S. Environmental Protection Agency (USEPA). 2004b. Risk Assessment Guidance for Superfund, Volume I: Human Health Evaluation Manual (Part E, Supplemental Guidance for Dermal Risk Assessment), Final. Office of Superfund Remediation and Technology Innovation, Washington, DC. OSWER 9285.7-02EP. EPA/540/R/99/005. PB99-963312. July.

U. S. Environmental Protection Agency (USEPA). 2005a. Guidelines for Carcinogenic Risk Assessment. EPA/630/P-03/001F. March.

U.S. Environmental Protection Agency (USEPA). 2005b. Ecological Soil Screening Levels (EcoSSLs). Office of Emergency and Remedial Response. April. http://www.epa.gov/superfund/programs/risk/ecorisk/ecossl.htm

U.S. Environmental Protection Agency (USEPA). 2005c. Ecological Soil Screening Levels for Chromium. Interim Final. OSWER Directive 9285.7-66. March.

U.S. Environmental Protection Agency (USEPA). 2005d. Ecological Soil Screening Levels for Barium. Interim Final. OSWER Directive 9285.7-63. February.

U .S. Environmental Protection Agency (USEPA). 2006. Region 3 Ecological Screening Benchmarks. http://epa.gov/reg3hscd/risk/eco/index.htm

U.S. Environmental Protection Agency (USEPA) 2007a. Groundwater Sampling Operating Procedure, Number SESDPROC-301-R1. Region IV, Athens, Georgia. U.S. Environmental Protection Agency, November 2007.

U.S. Environmental Protection Agency (USEPA). 2007b. Ecological Soil Screening Levels for Polycyclic Aromatic Hydrocarbons. Interim Final. OSWER Directive 9285.7-78. June.

U.S. Environmental Protection Agency (USEPA). 2010. ProUCL Version 4.1.00. Technical Guide (Draft). Statistical Software for Environmental Applications for Data Sets with and without Nondetect Observations. EPA/600/R-07/041. May 2010.

U.S. Environmental Protection Agency (USEPA). 2011a. EPI Suite software, Version 4. Office of Pollution Prevention and Toxics, Washington DC. Available at: http://www.epa.gov/oppt/exposure/pubs/episuite.htm

U.S. Environmental Protection Agency (USEPA). 2011b. Exposure Factors Handbook: 2011 Edition. EPA/600/R-090/052F. Office of Research and Development, Washington, DC. September.

U.S. Environmental Protection Agency (USEPA). 2012. Regional Screening Table. Available at: http://www.epa.gov/reg3hwmd/risk/human/rb-concentration_table/index.htm. May.

U.S. Environmental Protection Agency (USEPA). 2013a Integrated Risk Information System (IRIS). Office of Research and Development, National Center of Environmental Assessment (NCEA). Available at: http://www.epa.gov/iris.

U.S. Environmental Protection Agency (USEPA). 2013b. Provisional Peer Reviewed Toxicity Values (PPRTV). Available at: http://hhpprtv.ornl.gov/.

U.S. Environmental Protection Agency (USEPA). 2013c. The Superfund Chemical Data Matrix (SCDM). Available at: http://www.epa.gov/superfund/sites/npl/hrsres/tools/scdm.htm. March.

U.S. Environmental Protection Agency (USEPA). 2013d. Ecological Soil Screening Levels (EcoSSLs) Guidance and Documents Website. Office of Emergency and Remedial Response. http://www.epa.gov/oswer/riskassessment/ecorisk/ecossl.htm

U.S. Environmental Protection Agency (USEPA). 2013e. Regional Screening Level Table. Available at: http://www.epa.gov/reg3hwmd/risk/human/rb-concentration_table/index.htm. November.

U.S. Environmental Protection Agency (USEPA). 2013f. Ambient Water Quality Criteria. Available at: http://water.epa.gov/scitech/swguidance/standards/criteria/current/index.cfm.

U.S. Fish and Wildlife Service (USFWS). 2012. Endangered Species Program online database http://www.fws.gov/endangered/

U.S. Geologic Survey (USGS) 1976. Hinesville, Georgia Quadrangle. U.S. Department of Interior.

Tables

Table 3-1
Historic Groundwater Analytical Data
SWMU 39
Fort Stewart, Georgia

		Location ID	22-07	22-07	22-07R	22-07R	22-08	22-08	22-08	22-08	22-08	22-08	22-08	22-08	22-09	22-09	22-09	22-09	22-09	G4MW001
		Sample Date	1/13/2000	1/9/2001	1/18/2007	7/26/2007	1/13/2000	1/9/2001	9/1/2004	11/4/2004	7/21/2005	1/19/2007	7/26/2007	4/1/2008	1/13/2000	1/9/2001	7/21/2005	1/19/2007	7/26/2007	4/28/2004
Volatile Organic Compounds (µg/L)	**Tap water RSL[1]**	**MCL[2]**																		
1,1-Dichloroethane	2.4		NA	NA	NA	NA	NA	NA	NA	NA	NA	NA	NA	<	NA	NA	NA	NA	NA	**0.58**
1,1-Dichloroethene	260	7	NA	NA	NA	NA	NA	NA	NA	NA	NA	NA	NA	<	NA	NA	NA	NA	NA	**0.97**
1,2,4-Trichlorobenzene	0.99	70	NA	NA	NA	NA	NA	NA	NA	NA	NA	NA	NA	NA	NA	NA	NA	NA	NA	<
1,2-Dichlorobenzene	280	600	NA	NA	NA	NA	NA	NA	NA	NA	NA	NA	NA	NA	NA	NA	NA	NA	NA	**0.11 J**
1,2-Dichloroethane	0.15	5	NA	NA	NA	NA	NA	NA	NA	NA	NA	NA	NA	NA	NA	NA	NA	NA	NA	<
2-Butanone	4900		NA	NA	NA	NA	NA	NA	NA	NA	NA	NA	NA	<	NA	NA	NA	NA	NA	NA
2-Hexanone	34		NA	NA	NA	NA	NA	NA	NA	NA	NA	NA	NA	NA	NA	NA	NA	NA	NA	NA
4-Methyl-2-pentanone	1000		NA	NA	NA	NA	NA	NA	NA	NA	NA	NA	NA	<	NA	NA	NA	NA	NA	NA
Acetone	12000		NA	NA	NA	NA	NA	NA	NA	NA	NA	NA	NA	<	NA	NA	NA	NA	NA	NA
Benzene	0.39	5	**84**	< 2.3	**0.4 J**	**2.1**	**78.2**	< 2.6	**20**	**30**	**11.7**	**23**	**5.7**	**3.6**	< 1	< 1.2	< 2	< 1 U	0.14 J	**0.2 J**
Benzene, 1-methylethyl	390		NA	NA	NA	NA	NA	NA	NA	NA	NA	NA	NA	**0.57 J**	NA	NA	NA	NA	NA	NA
Carbon disulfide	720		NA	NA	NA	NA	NA	NA	NA	NA	NA	NA	NA	**0.15 J**	NA	NA	NA	NA	NA	**14**
Chloroform	0.19	80	NA	NA	NA	NA	NA	NA	NA	NA	NA	NA	NA	<	NA	NA	NA	NA	NA	NA
Chloromethane	190		NA	NA	NA	NA	NA	NA	NA	NA	NA	NA	NA	**0.47 J**	NA	NA	NA	NA	NA	<
cis-1,2-Dichloroethene	28	70	NA	NA	NA	NA	NA	NA	NA	NA	NA	NA	NA	**2.1**	NA	NA	NA	NA	NA	**16**
Ethylbenzene	1.3	700	**43.2**	**10**	< 1 U	**1.2 J**	**7**	**2.5**	NA	NA	**1.92 J**	**3.2**	**0.59 J**	NA	< 1	**1.2**	< 2	< 1 U	< 1 U	NA
Methylcyclohexane	5200*		NA	NA	NA	NA	NA	NA	NA	NA	NA	NA	NA	**0.3 J**	NA	NA	NA	NA	NA	NA
tert-Butyl methyl ether	12		NA	NA	< 1 U	< 1 U	NA	NA	NA	NA	< 2	**1**	**0.26 J**	**0.19 J**	NA	NA	< 2	< 1 U	< 1 U	<
Tetrachloroethene	9.7	5	NA	NA	NA	NA	NA	NA	**0.32**	**0.34 J**	NA	NA	NA	**0.25 J**	NA	NA	NA	NA	NA	<
Toluene	860	1000	**12.8**	< 2.3	**0.37 J**	**0.65 J**	**7.6**	< 2.6	NA	NA	< 2	< 1 U	< 1 U	NA	< 1	< 1.2	**0.54 J**	< 1 U	< 1 U	NA
trans-1,2-Dichloroethene	86	100	NA	NA	NA	NA	NA	NA	NA	NA	NA	NA	NA	**0.45 J**	NA	NA	NA	NA	NA	**5.2**
Trichloroethene	0.44	5	NA	NA	NA	NA	NA	NA	**1**	**1.1**	NA	NA	NA	**0.82 J**	NA	NA	NA	NA	NA	**20**
Vinyl chloride	0.015	2	NA	NA	NA	NA	NA	NA	<	<	NA	NA	NA	<	NA	NA	NA	NA	NA	<
Xylenes (total)	190	10000	**120**	**30.1**	**1**	**3.7**	**17.6**	**11.1**	NA	NA	**9.97**	**1.3**	< 1 U	<	< 1	**5.6**	< 2	< 1 U	< 1 U	**0.14 J**

		Location ID	G4MW001	G4MW001	G4MW002	G4MW002	G4MW002	G4MW003	G4MW003	G4MW003	G4MW003	G4MW004	G4MW004	G4MW004	G4MW005	G4MW005	G4MW005	G4MW005	G4MW006	G4MW006 (DUP)
		Sample Date	11/3/2004	3/31/2008	4/28/2004	11/4/2004	10/25/2007	4/28/2004	11/4/2004	10/24/2007	3/30/2008	11/3/2004	10/24/2007	3/30/2008	4/28/2004	11/3/2004	10/25/2007	3/31/2008	4/28/2004	4/28/2004
Volatile Organic Compounds (µg/L)	**Tap water RSL[1]**	**MCL[2]**																		
1,1-Dichloroethane	2.4		NA	**0.3 J**	NA	NA	NA	**1.1 J**	NA	NA	<	NA	NA	**0.32 J**	**1.2 J**	NA	NA	**0.28 J**	**1.5 J**	NA
1,1-Dichloroethene	260	7	NA	**1.3**	NA	NA	NA	**1.9**	NA	NA	**1.1**	NA	NA	**1.1**	**1.8**	NA	NA	**1**	**1.9**	NA
1,2,4-Trichlorobenzene	0.99	70	NA	NA	NA	NA	NA	<	NA	NA	NA	NA	NA	NA	<	NA	NA	NA	<	NA
1,2-Dichlorobenzene	280	600	NA	NA	NA	NA	NA	<	NA	NA	NA	NA	NA	NA	<	NA	NA	NA	<	NA
1,2-Dichloroethane	0.15	5	NA	NA	NA	NA	NA	<	NA	NA	NA	NA	NA	NA	<	NA	NA	NA	<	NA
2-Butanone	4900		NA	<	NA	NA	NA	NA	NA	NA	<	NA	NA	<	NA	NA	NA	<	NA	NA
2-Hexanone	34		NA	NA	NA	NA	NA	NA	NA	NA	NA	NA	NA	NA	NA	NA	NA	NA	NA	NA
4-Methyl-2-pentanone	1000		NA	<	NA	NA	NA	NA	NA	NA	<	NA	NA	<	NA	NA	NA	<	NA	NA
Acetone	12000		NA	<	NA	NA	NA	NA	NA	NA	<	NA	NA	<	NA	NA	NA	<	NA	NA
Benzene	0.39	5	<	<	<	<	**0.24 J**	<	<	<	<	<	<	<	<	<	<	**0.14 J**	<	**0.19 J**
Benzene, 1-methylethyl	390		NA	<	NA	NA	NA	NA	NA	NA	<	NA	NA	<	NA	NA	NA	<	NA	NA
Carbon disulfide	720		NA	<	NA	NA	NA	<	NA	NA	<	NA	NA	<	<	NA	NA	<	<	NA
Chloroform	0.19	80	NA	<	NA	NA	NA	NA	NA	NA	<	NA	NA	<	NA	NA	NA	<	NA	NA
Chloromethane	190		NA	<	NA	NA	NA	<	NA	NA	<	NA	NA	<	<	NA	NA	<	<	NA
cis-1,2-Dichloroethene	28	70	NA	**21**	NA	NA	NA	**20**	NA	NA	**22**	NA	NA	**22**	**21**	NA	NA	**18**	**22**	NA
Ethylbenzene	1.3	700	NA	NA	NA	NA	<	NA	NA	<	NA	NA	<	NA	NA	NA	<	NA	NA	NA
Methylcyclohexane	5,200*		NA	<	NA	NA	NA	NA	NA	NA	<	NA	NA	<	NA	NA	NA	<	NA	NA
tert-Butyl methyl ether	12		NA	<	NA	NA	<	<	NA	<	<	NA	<	<	<	NA	<	<	**0.11 J**	NA
Tetrachloroethene	0.072	5	<	<	<	<	NA	<	<	NA	<	<	NA	<	<	<	NA	<	<	<
Toluene	860	1000	NA	NA	NA	NA	<	NA	NA	<	NA	NA	<	NA	NA	NA	<	NA	NA	NA
trans-1,2-Dichloroethene	86	100	NA	**7.1**	NA	NA	NA	**7.8**	NA	NA	**7.2**	NA	NA	**7.4**	**5.9**	NA	NA	**4.9**	**8.1**	NA
Trichloroethene	0.44	5	**9.2**	**10**	**21**	<	NA	**21**	**20**	NA	**11**	**20**	NA	**13**	**16**	**15**	NA	**12**	**22**	**21**
Vinyl chloride	0.015	2	<	<	<	<	NA	<	<	NA	<	<	NA	<	<	<	NA	<	<	<
Xylenes (total)	190	10000	NA	<	NA	NA	<	<	NA	<	<	NA	<	<	<	NA	<	<	<	NA

Notes:

[1] U.S. EPA Regional Screening Level for tap water as of November 2012.

[2] U.S. EPA Maximum Contaminant Level for groundwater as of November 2012.

Sample results were screened against the RSL. If no RSL was available, the MCL was used instead.

* Sample results were screened against the 2004 PRG.

Exceedences of the screening criteria are shaded gray.

J Constituent concentration was estimated.

NA Not available.

µg/L Micrograms per liter.

< Below detection limit

Table 3-1
Historic Groundwater Analytical Data
SWMU 39
Fort Stewart, Georgia

		Location ID	G4MW006	G4MW006	G4MW006	G4MW007R	G4MW008	G4MW008	G4MW008	G4MW008	G4MW009	G4MW009	G4MW009	G4MW009	G4MW009 (DUP)	G4MW010	G4MW010	G4MW010	G4MW010	G4MW010 (DUP)
		Sample Date	11/3/2004	10/25/2007	3/31/2008	3/31/2008	4/28/2004	11/3/2004	10/25/2007	3/31/2008	4/28/2004	11/3/2004	10/25/2007	3/31/2008	3/31/2008	4/28/2004	11/4/2004	10/25/2007	3/30/2008	3/30/2008
Volatile Organic Compounds (µg/L)	**Tap water RSL[1]**	**MCL[2]**																		
1,1-Dichloroethane	2.4		NA	NA	**0.26 J**	<	**1**	NA	NA	**0.32 J**	**0.87 J**	NA	NA	**0.29 J**	<	**0.32 J**	NA	NA	<	<
1,1-Dichloroethene	260	7	NA	NA	**1.2**	**0.53 J**	**2.4**	NA	NA	**0.94 J**	**1.3**	NA	NA	**0.77 J**	**0.73 J**	**0.6**	NA	NA	<	<
1,2,4-Trichlorobenzene	0.99	70	NA	NA	NA	NA	<	NA	NA	NA	<	NA	NA	NA	NA	<	NA	NA	NA	NA
1,2-Dichlorobenzene	280	600	NA	NA	NA	NA	**0.15 J**	NA	NA	NA	<	NA	NA	NA	NA	NA	NA	NA	NA	NA
1,2-Dichloroethane	0.15	5	NA	NA	NA	NA	<	NA	NA	NA	<	NA	NA	NA	NA	<	NA	NA	NA	NA
2-Butanone	4900		NA	NA	<	<	NA	NA	NA	<	NA	NA	NA	<	<	NA	NA	NA	<	<
2-Hexanone	34		NA	NA	NA	NA	NA	NA	NA	NA	NA	NA	NA	NA	NA	NA	NA	NA	NA	NA
4-Methyl-2-pentanone	1000		NA	NA	<	<	NA	NA	NA	<	NA	NA	NA	<	<	NA	NA	NA	<	<
Acetone	12000		NA	NA	<	<	NA	NA	NA	<	NA	NA	NA	<	<	NA	NA	NA	**5.9 J**	**7.6 J**
Benzene	0.39	5	<	<	**0.14 J**	<	**0.2 J**	<	<	<	**0.2 J**	<	<	<	<	<	<	**0.14 J**	**0.22 J**	**0.2 J**
Benzene, 1-methylethyl	390		NA	NA	<	<	NA	NA	NA	<	NA	NA	NA	<	<	NA	NA	NA	<	<
Carbon disulfide	720		NA	NA	<	<	<	NA	NA	<	<	NA	NA	<	<	<	NA	NA	**0.2 J**	<
Chloroform	0.19	80	NA	NA	<	<	NA	NA	NA	<	NA	NA	NA	<	<	NA	NA	NA	<	<
Chloromethane	190		NA	NA	<	<	<	NA	NA	<	<	NA	NA	<	<	<	NA	NA	<	<
cis-1,2-Dichloroethene	28	70	NA	NA	**18**	**14**	**23**	NA	NA	**19**	<	NA	NA	**18**	**18**	**9.6**	NA	NA	**4.5 J**	**6.6 J**
Ethylbenzene	1.3	700	NA	<	NA	NA	NA	NA	<	NA	NA	NA	<	NA	NA	NA	NA	<	NA	NA
Methylcyclohexane	5200*		NA	NA	<	<	NA	NA	NA	<	NA	NA	NA	<	<	NA	NA	NA	<	<
tert-Butyl methyl ether	12		NA	<	<	<	<	NA	<	<	<	NA	<	<	<	<	NA	<	<	<
Tetrachloroethene	9.7	5	<	NA	<	<	<	<	NA	<	<	<	NA	<	<	<	<	NA	<	<
Toluene	860	1000	NA	<	NA	NA	NA	NA	<	NA	NA	NA	<	NA	NA	NA	NA	<	NA	NA
trans-1,2-Dichloroethene	86	100	NA	NA	**5.1**	**3.6**	**7.8**	NA	NA	**6.5**	**6**	NA	NA	**5.4**	**5.4**	<	NA	NA	**1.8**	**2.4**
Trichloroethene	0.44	5	**17**	NA	**10**	**5**	**33**	**25**	NA	**9.9**	**23**	**12**	NA	**9**	**9.1**	**6.4**	**11**	NA	**1.5 J**	**2.6 J**
Vinyl chloride	0.015	2	<	NA	<	<	<	<	NA	<	<	<	NA	<	<	<	<	NA	**2.1**	**2**
Xylenes (total)	190	10000	NA	<	<	<	<	NA	<	<	<	NA	<	<	<	<	NA	<	<	<

		Location ID	G4MW011	G4MW011	G4MW011 (DUP)	G4MW011	G4MW011	G4MW012	G4MW012	G4MW012	G4MW012	G4MW013	G4MW013	G4MW013R	G4MW014	G4MW014 (DUP)	G4MW014	G4MW014 (DUP)	G4MW014	G4MW014
		Sample Date	4/28/2004	11/4/2004	11/4/2004	10/25/2007	3/31/2008	4/28/2004	11/4/2004	10/25/2007	3/31/2008	4/28/2004	10/25/2007	3/31/2008	4/28/2004	4/28/2004	11/2/2004	11/2/2004	10/23/2007	3/30/2008
Volatile Organic Compounds (µg/L)	**Tap water RSL[1]**	**MCL[2]**																		
1,1-Dichloroethane	2.4		**0.98**	NA	NA	NA	**0.27 J**	**0.7**	NA	NA	<	**0.94**	NA	**0.29 J**	<	NA	NA	NA	NA	<
1,1-Dichloroethene	260	7	**2.3**	NA	NA	NA	**0.83 J**	**1.4**	NA	NA	**1**	**2**	NA	**1.1**	<	NA	NA	NA	NA	<
1,2,4-Trichlorobenzene	0.99	70	**0.12 J**	NA	NA	NA	NA	<	NA	NA	NA	<	NA	NA	<	NA	NA	NA	NA	NA
1,2-Dichlorobenzene	280	600	**0.17 J**	NA	NA	NA	NA	**0.11**	NA	NA	NA	<	NA	NA	<	NA	NA	NA	NA	NA
1,2-Dichloroethane	0.15	5	<	NA	NA	NA	NA	<	NA	NA	NA	<	NA	NA	<	NA	NA	NA	NA	NA
2-Butanone	4900		NA	NA	NA	NA	<	NA	NA	NA	<	NA	NA	<	NA	NA	NA	NA	NA	<
2-Hexanone	34		NA	NA	NA	NA	NA	NA	NA	NA	NA	NA	NA	NA	NA	NA	NA	NA	NA	NA
4-Methyl-2-pentanone	1000		NA	NA	NA	NA	<	NA	NA	NA	<	NA	NA	<	NA	NA	NA	NA	NA	<
Acetone	12000		NA	NA	NA	NA	<	NA	NA	NA	<	NA	NA	<	NA	NA	NA	NA	NA	<
Benzene	0.39	5	<	<	<	<	<	<	<	<	<	<	<	<	<	<	<	<	<	<
Benzene, 1-methylethyl	390		NA	NA	NA	NA	<	NA	NA	NA	<	NA	NA	<	NA	NA	NA	NA	NA	<
Carbon disulfide	720		<	NA	NA	NA	<	**94**	NA	NA	<	<	NA	<	<	NA	NA	NA	NA	<
Chloroform	0.19	80	NA	NA	NA	NA	<	NA	NA	NA	<	NA	NA	<	NA	NA	NA	NA	NA	<
Chloromethane	190		<	NA	NA	NA	<	<	NA	NA	<	<	NA	<	**0.19 J**	NA	NA	NA	NA	<
cis-1,2-Dichloroethene	28	70	**21**	NA	NA	NA	**19**	**17**	NA	NA	**22**	**21**	NA	**17**	**0.58**	NA	NA	NA	NA	**0.85 J**
Ethylbenzene	1.3	700	NA	NA	NA	<	NA	NA	NA	<	NA	NA	<	NA	NA	NA	NA	NA	<	NA
Methylcyclohexane	5200*		NA	NA	NA	NA	<	NA	NA	NA	<	NA	NA	<	NA	NA	NA	NA	NA	<
tert-Butyl methyl ether	12		<	NA	NA	<	<	<	NA	<	<	<	<	<	<	NA	NA	NA	<	<
Tetrachloroethene	9.7	5	<	<	<	NA	<	<	<	NA	<	<	NA	<	<	<	<	<	NA	<
Toluene	860	1000	NA	NA	NA	<	NA	NA	NA	<	NA	NA	<	NA	NA	NA	NA	NA	<	NA
trans-1,2-Dichloroethene	86	100	**7.4**	NA	NA	NA	**5.3**	**5.1**	NA	NA	**7**	**7**	NA	**5.2**	<	NA	NA	NA	NA	<
Trichloroethene	0.44	5	**26**	**19**	**17**	NA	**9**	**23**	**20**	NA	**12**	**24**	NA	**9.4**	**0.99**	**1.2**	**1.6**	**2.1**	NA	**1.4**
Vinyl chloride	0.015	2	**0.16 J**	<	<	NA	<	<	<	NA	<	<	NA	<	<	<	<	<	NA	<
Xylenes (total)	190	10000	<	NA	NA	<	<	<	NA	<	<	<	<	<	<	NA	NA	NA	<	<

Notes:

[1] U.S. EPA Regional Screening Level for tap water as of November 2012.
[2] U.S. EPA Maximum Contaminant Level for groundwater as of November 2012.
Sample results were screened against the RSL. If no RSL was available, the MCL was used instead.
* Sample results were screened against the 2004 PRG.
Exceedences of the screening criteria are shaded gray.
J Constituent concentration was estimated.
NA Not available.
µg/L Micrograms per liter.
< Below detection limit

Table 3-1
Historic Groundwater Analytical Data
SWMU 39
Fort Stewart, Georgia

		Location ID	G4MW015	G4MW015	G4MW015	G4MW015	G4MW016	G4MW016	G4MW016	G4MW016	G4MW017	G4MW017	G4MW017	G4MW017	G4MW018	G4MW018	G4MW018 (DUP)	G4MW018	G4MW018	G4MW019
		Sample Date	4/28/2004	11/2/2004	10/23/2007	3/30/2008	4/28/2004	11/2/2004	10/23/2007	3/31/2008	4/28/2004	11/2/2004	10/25/2007	3/31/2008	4/28/2004	11/3/2004	11/3/2004	10/25/2007	3/30/2008	4/28/2004
Volatile Organic Compounds (µg/L)	**Tap water RSL[1]**	**MCL[2]**																		
1,1-Dichloroethane	2.4		**0.15 J**	NA	NA	<	<	NA	NA	<	<	NA	NA	<	**1.2 J**	NA	NA	NA	<	**1**
1,1-Dichloroethene	260	7	**0.13 J**	NA	NA	<	**0.31 J**	NA	NA	**0.24 J**	<	NA	NA	**0.23 J**	**1.7**	NA	NA	NA	**0.82 J**	**1.8**
1,2,4-Trichlorobenzene	0.99	70	<	NA	NA	NA	<	NA	NA	NA	<	NA	NA	NA	<	NA	NA	NA	NA	<
1,2-Dichlorobenzene	280	600	<	NA	NA	NA	<	NA	NA	NA	<	NA	NA	NA	<	NA	NA	NA	NA	<
1,2-Dichloroethane	0.15	5	<	NA	NA	NA	<	NA	NA	NA	<	NA	NA	NA	<	NA	NA	NA	NA	<
2-Butanone	4900		NA	NA	NA	<	NA	NA	NA	<	NA	NA	NA	<	NA	NA	NA	NA	<	NA
2-Hexanone	34		NA	NA	NA	NA	NA	NA	NA	NA	NA	NA	NA	NA	NA	NA	NA	NA	NA	NA
4-Methyl-2-pentanone	1000		NA	NA	NA	<	NA	NA	NA	<	NA	NA	NA	<	NA	NA	NA	NA	<	NA
Acetone	12000		NA	NA	NA	<	NA	NA	NA	<	NA	NA	NA	<	NA	NA	NA	NA	<	NA
Benzene	0.39	5	<	<	<	<	**0.48 J**	**0.4 J**	**0.42 J**	**0.36 J**	**0.22 J**	<	**0.13 J**	**0.15 J**	**0.15 J**	<	<	<	<	<
Benzene, 1-methylethyl	390		NA	NA	NA	<	NA	NA	NA	<	NA	NA	NA	<	NA	NA	NA	NA	<	NA
Carbon disulfide	720		<	NA	NA	<	**6.7**	NA	NA	<	<	NA	NA	<	<	NA	NA	NA	<	<
Chloroform	0.19	80	NA	NA	NA	<	NA	NA	NA	<	NA	NA	NA	<	NA	NA	NA	NA	<	NA
Chloromethane	190		<	NA	NA	<	<	NA	NA	<	<	NA	NA	<	<	NA	NA	NA	<	<
cis-1,2-Dichloroethene	28	70	**0.99**	NA	NA	**1.4**	**2.3**	NA	NA	**3.2**	**1**	NA	NA	**2.5**	**18**	NA	NA	NA	**13**	**20**
Ethylbenzene	1.3	700	NA	NA	<	NA	NA	NA	<	NA	NA	NA	<	NA	NA	NA	NA	<	NA	NA
Methylcyclohexane	5200*		NA	NA	NA	<	NA	NA	NA	<	NA	NA	NA	<	NA	NA	NA	NA	<	NA
tert-Butyl methyl ether	12		<	NA	<	<	<	NA	<	<	<	NA	<	<	<	NA	NA	<	<	<
Tetrachloroethene	9.7	5	<	<	NA	<	**27**	**25**	NA	**7.4**	**13**	**3.3**	NA	**1.7**	**1.2**	**2.1**	**1.5**	NA	**0.37 J**	<
Toluene	860	1000	NA	NA	<	NA	NA	NA	<	NA	NA	NA	<	NA	NA	NA	NA	<	NA	NA
trans-1,2-Dichloroethene	86	100	**0.12 J**	NA	NA	<	**0.32 J**	NA	NA	**0.54 J**	**0.23 J**	NA	NA	**0.71 J**	**4.6**	NA	NA	NA	**3.6**	**7.1**
Trichloroethene	0.44	5	**0.78**	**1.2**	NA	**1.6**	**23**	**23**	NA	**27**	**11**	**5.6**	NA	**10**	**14**	**9.2**	**7.2**	NA	**9.4**	**24**
Vinyl chloride	0.015	2	<	<	NA	<	<	<	NA	<	<	<	NA	<	<	<	<	NA	**0.2 J**	<
Xylenes (total)	190	10000	<	NA	<	<	<	NA	<	<	<	NA	<	<	<	NA	NA	<	<	<

		Location ID	G4MW019	G4MW019	G4MW019	G4MW020	G4MW020	G4MW020	G4MW020	G4MW021	G4MW021	G4MW021	G4MW021	G4MW022	G4MW022	G4MW022	G4MW022	G4MW023	G4MW023	G4MW023
		Sample Date	11/3/2004	10/24/2007	3/30/2008	4/28/2004	11/3/2004	10/24/2007	3/30/2008	4/28/2004	11/3/2004	10/24/2007	3/30/2008	4/28/2004	11/2/2004	10/23/2007	4/1/2008	9/1/2004	11/2/2004	10/23/2007
Volatile Organic Compounds (µg/L)	**Tap water RSL[1]**	**MCL[2]**																		
1,1-Dichloroethane	2.4		NA	NA	<	**0.87 J**	NA	NA	<	<	NA	NA	<	NA	NA	NA	<	NA	NA	NA
1,1-Dichloroethene	260	7	NA	NA	**0.95 J**	**0.94**	NA	NA	<	**1.9**	NA	NA	<	NA	NA	NA	<	NA	NA	NA
1,2,4-Trichlorobenzene	0.99	70	NA	NA	NA	<	NA	NA	NA	<	NA	NA	NA	NA	NA	NA	NA	NA	NA	NA
1,2-Dichlorobenzene	280	600	NA	NA	NA	<	NA	NA	NA	**0.1 J**	NA	NA	NA	NA	NA	NA	NA	NA	NA	NA
1,2-Dichloroethane	0.15	5	NA	NA	NA	<	NA	NA	NA	NA	NA	NA	NA	NA	NA	NA	NA	NA	NA	NA
2-Butanone	4900		NA	NA	<	NA	NA	NA	<	NA	NA	NA	<	NA	NA	NA	<	NA	NA	NA
2-Hexanone	34		NA	NA	NA	NA	NA	NA	NA	NA	NA	NA	NA	NA	NA	NA	NA	NA	NA	NA
4-Methyl-2-pentanone	1000		NA	NA	<	NA	NA	NA	<	NA	NA	NA	<	NA	NA	NA	<	NA	NA	NA
Acetone	12000		NA	NA	<	NA	NA	NA	<	NA	NA	NA	**5.5 J**	NA	NA	NA	<	NA	NA	NA
Benzene	0.39	5	<	<	**0.13 J**	<	<	**0.18 J**	**0.21 J**	**0.18 J**	<	**0.29 J**	**0.28 J**	<	<	<	<	<	<	<
Benzene, 1-methylethyl	390		NA	NA	<	NA	NA	NA	<	NA	NA	NA	<	NA	NA	NA	<	NA	NA	NA
Carbon disulfide	720		NA	NA	**0.66 J**	<	NA	NA	<	**13**	NA	NA	<	NA	NA	NA	<	NA	NA	NA
Chloroform	0.19	80	NA	NA	<	NA	NA	NA	<	NA	NA	NA	<	NA	NA	NA	<	NA	NA	NA
Chloromethane	190		NA	NA	<	<	NA	NA	<	<	NA	NA	<	NA	NA	NA	<	NA	NA	NA
cis-1,2-Dichloroethene	28	70	NA	NA	**18**	**14**	NA	NA	**13**	**25**	NA	NA	**2**	NA	NA	NA	<	NA	NA	NA
Ethylbenzene	1.3	700	NA	<	NA	NA	NA	<	NA	NA	NA	<	NA	NA	NA	<	NA	NA	NA	<
Methylcyclohexane	5200*		NA	NA	<	NA	NA	NA	<	NA	NA	NA	<	NA	NA	NA	<	NA	NA	NA
tert-Butyl methyl ether	12		NA	<	<	**0.1 J**	NA	<	<	<	NA	<	**0.54 J**	NA	NA	<	<	NA	NA	<
Tetrachloroethene	9.7	5	<	NA	<	<	<	NA	<	<	<	NA	<	<	<	NA	<	<	<	NA
Toluene	860	1000	NA	<	NA	NA	NA	<	NA	NA	NA	<	NA	NA	NA	**44**	NA	NA	NA	<
trans-1,2-Dichloroethene	86	100	NA	NA	**6.4**	**2.4**	NA	NA	**1.6**	**8.8**	NA	NA	**0.7 J**	NA	NA	NA	<	NA	NA	NA
Trichloroethene	0.44	5	**22**	NA	**11**	**0.86**	**0.28 J**	NA	**8**	**21**	**12**	NA	**0.38 J**	<	<	NA	<	**0.82**	**1.2**	NA
Vinyl chloride	0.015	2	<	NA	<	**0.7**	**0.51 J**	NA	<	<	<	NA	<	<	<	NA	<	<	<	NA
Xylenes (total)	190	10000	NA	<	<	<	NA	<	<	<	NA	<	**0.33 J**	NA	NA	<	<	NA	NA	<

Notes:

1	U.S. EPA Regional Screening Level for tap water as of November 2012.
2	U.S. EPA Maximum Contaminant Level for groundwater as of November 2012.
	Sample results were screened against the RSL. If no RSL was available, the MCL was used instead.
*	Sample results were screened against the 2004 PRG.
	Exceedences of the screening criteria are shaded gray.
J	Constituent concentration was estimated.
NA	Not available.
µg/L	Micrograms per liter.
<	Below detection limit

Table 3-1
Historic Groundwater Analytical Data
SWMU 39
Fort Stewart, Georgia

		Location ID	G4MW023	G4MW023	G4MW024	G4MW024	G4MW024	G4MW024	G4MW025	G4MW025	G4MW025	G4MW025	G4MW026	G4MW027	G4MW028	G4MW029	G4MW030	G4MW031	G4MW031 (DUP)	G4MW032
		Sample Date	4/1/2008	4/1/2008	9/1/2004	11/3/2004	10/24/2007	3/30/2008	9/1/2004	11/3/2004	10/24/2007	3/30/2008	4/1/2008	4/1/2008	4/1/2008	4/1/2008	4/1/2008	4/1/2008	4/1/2008	4/1/2008
Volatile Organic Compounds (µg/L)	**Tap water RSL[1]**	**MCL[2]**																		
1,1-Dichloroethane	2.4		<	<	NA	NA	NA	<	NA	NA	NA	**0.32 J**	<	<	<	<	<	<	<	<
1,1-Dichloroethene	260	7	<	<	NA	NA	NA	**0.65 J**	NA	NA	NA	**0.64 J**	<	<	<	<	<	<	<	<
1,2,4-Trichlorobenzene	0.99	70	NA	NA	NA	NA	NA	NA	NA	NA	NA	NA	NA	NA	NA	NA	NA	NA	NA	NA
1,2-Dichlorobenzene	280	600	NA	NA	NA	NA	NA	NA	NA	NA	NA	NA	NA	NA	NA	NA	NA	NA	NA	NA
1,2-Dichloroethane	0.15	5	NA	NA	NA	NA	NA	NA	NA	NA	NA	NA	NA	NA	NA	NA	NA	NA	NA	NA
2-Butanone	4900		<	<	NA	NA	NA	<	NA	NA	NA	<	<	<	<	**2.1 J**	<	<	<	<
2-Hexanone	34		NA	NA	NA	NA	NA	NA	NA	NA	NA	NA	NA	NA	NA	NA	NA	NA	NA	NA
4-Methyl-2-pentanone	1000		<	<	NA	NA	NA	<	NA	NA	NA	<	<	<	<	**0.54 J**	<	<	<	<
Acetone	12000		<	<	NA	NA	NA	**6.1 J**	NA	NA	NA	<	<	<	<	<	<	<	<	<
Benzene	0.39	5	<	<	<	<	**0.13 J**	**0.13 J**	<	<	<	<	<	<	**0.18 J**	**0.17 J**	<	<	<	<
Benzene, 1-methylethyl	390		<	<	NA	NA	NA	<	NA	NA	NA	<	<	<	<	<	<	<	<	<
Carbon disulfide	720		<	<	NA	NA	NA	<	NA	NA	NA	<	<	<	<	<	<	<	**0.19 J**	<
Chloroform	0.19	80	<	<	NA	NA	NA	<	NA	NA	NA	<	**0.21 J**	<	<	**0.59 J**	<	<	<	<
Chloromethane	190		<	<	NA	NA	NA	<	NA	NA	NA	<	<	<	<	<	<	<	<	<
cis-1,2-Dichloroethene	28	70	**0.34 J**	**0.49 J**	NA	NA	NA	**9.8**	NA	NA	NA	**11**	<	**1**	<	**0.43 J**	**0.3 J**	<	<	**0.34**
Ethylbenzene	1.3	700	NA	NA	NA	NA	<	NA	NA	NA	<	NA	NA	NA	NA	NA	NA	NA	NA	NA
Methylcyclohexane	5200*		<	<	NA	NA	NA	<	NA	NA	NA	<	<	<	<	<	<	<	<	<
tert-Butyl methyl ether	12		<	<	NA	NA	<	<	NA	NA	<	<	<	<	<	<	<	<	<	<
Tetrachloroethene	9.7	5	<	<	<	<	NA	<	**2.6**	**1.3**	NA	<	<	**1.9**	<	<	<	<	<	**2.4 J**
Toluene	860	1000	NA	NA	NA	NA	<	NA	NA	NA	<	NA	NA	NA	NA	NA	NA	NA	NA	NA
trans-1,2-Dichloroethene	86	100	<	<	NA	NA	NA	**3.1**	NA	NA	NA	**3.2**	<	<	<	<	<	<	<	<
Trichloroethene	0.44	5	**1 J**	**1.8 J**	**9**	**10**	NA	**2.3**	**15**	**10**	NA	**7.5**	<	**8.9**	<	**0.24 J**	<	<	<	**0.55 J**
Vinyl chloride	0.015	2	<	<	<	<	NA	<	<	<	NA	<	<	<	<	<	<	<	<	<
Xylenes (total)	190	10000	<	<	NA	NA	<	<	NA	NA	<	<	<	<	<	<	<	<	<	<

Notes:

1	U.S. EPA Regional Screening Level for tap water as of November 2012.
2	U.S. EPA Maximum Contaminant Level for groundwater as of November 2012.
	Sample results were screened against the RSL. If no RSL was available, the MCL was used instead.
*	Sample results were screened against the 2004 PRG.
	Exceedences of the screening criteria are shaded gray.
J	Constituent concentration was estimated.
NA	Not available.
µg/L	Micrograms per liter.
<	Below detection limit

Table 3-2
2004 Soil Analytical Data
SWMU 39
Fort Stewart, Georgia

			Location ID	F39G4MW014	F39G4MW014-DUP	F39G4MW015	F39G4MW016	F39G4MW017	F39G4MW018	F39G4MW019	F39G4MW020	F39G4MW021	F39G4MW022	F39G4MW022	F39G4MW022-DUP	F39G4MW023	F39G4MW023	F39G4MW024
			Sample Date	4/14/2004	4/14/2004	4/14/2004	4/14/2004	4/14/2004	4/15/2004	4/15/2004	4/15/2004	4/15/2004	8/26/2004	8/26/2004	8/26/2004	8/27/2004	8/27/2004	8/27/2004
			Depth (ft bgs)	4-8	4-8	4-8	8-12	8-12	1-4	4-8	4-8	4-8	2-4	4-6	4-6	2-4	4-6	4-6
Chemical Name	Industrial Soil RSL	MCL based SSL	Risk based SSL															
VOCs - U.S. EPA Method 8260 (mg/kg)																		
1,1,1-Trichloroethane	38000	0.07	2.6	<4.3UJ	<4.2U	<5.1U	<5.5U	<5.1U	<4.1U	<4.2U	<4.4U	<4.6U	<6.2UJ	<5.6U	<8.3U	<4.5U	<5.2UJ	<7.2U
1,1,2,2-Tetrachloroethane	2.8		0.000026	<4.3UJ	<4.2U	<5.1U	<5.5U	<5.1U	<4.1U	<4.2U	<4.4U	<4.6U	<6.2UJ	<5.6U	<8.3U	<4.5U	<5.2UJ	<7.2U
1,1,2-Trichloro-1,2,2-Trifluoroethane	180000		130	<4.3UJ	<4.2U	<5.1U	<5.5U	<5.1U	<4.1UJ	<4.2UJ	<4.4UJ	<4.6UJ	<6.2UJ	<5.6U	<8.3U	<4.5U	<5.2UJ	<7.2U
1,1,2-Trichloroethane	5.3	0.0016	0.000077	<4.3UJ	<4.2U	<5.1U	<5.5U	<5.1U	<4.1U	<4.2U	<4.4U	<4.6U	<6.2UJ	<5.6U	<8.3U	<4.5U	<5.2UJ	<7.2U
1,1-Dichloroethane	17		0.00068	<4.3UJ	<4.2U	<5.1U	<5.5U	<5.1U	<4.1U	<4.2U	<4.4U	<4.6U	<6.2UJ	<5.6U	<8.3U	<4.5U	<5.2UJ	<7.2U
1,1-Dichloroethene	1100	0.0025	0.093	<4.3UJ	<4.2U	<5.1U	<5.5U	<5.1U	<4.1U	<4.2U	<4.4U	<4.6U	<6.2UJ	<5.6U	<8.3U	<4.5U	<5.2UJ	<7.2U
1,2,4-Trichlorobenzene	99	0.2	0.0029	<4.3UJ	<4.2U	<5.1U	<5.5U	<5.1U	<4.1U	<4.2U	<4.4U	<4.6U	<6.2UJ	<5.6U	<8.3U	<4.5U	<5.2UJ	<7.2U
1,2-Dibromo-3-chloropropane (DBCP)	0.069	0.000086	0.00000014	<4.3UJ	<4.2U	<5.1U	<5.5U	<5.1U	<4.1U	<4.2U	<4.4U	<4.6U	<12UJ	<11U	<16U	<9.1U	<10UJ	<14U
1,2-Dibromoethane	0.17	0.000014	0.0000018	**0.43J**	<4.2U	<5.1U	<5.5U	<5.1U	<4.1U	<4.2U	<4.4U	<4.6U	<6.2UJ	<5.6U	<8.3U	<4.5U	<5.2UJ	<7.2U
1,2-Dichlorobenzene	9800	0.58	0.27	<4.3UJ	<4.2U	<5.1U	<5.5U	<5.1U	<4.1U	<4.2U	<4.4U	<4.6U	<6.2UJ	<5.6U	<8.3U	<4.5U	<5.2UJ	<7.2U
1,2-Dichloroethane	2.2	0.0014	0.000042	<4.3UJ	<4.2U	<5.1U	<5.5U	<5.1U	<4.1U	<4.2U	<4.4U	<4.6U	<6.2UJ	<5.6U	<8.3U	<4.5U	<5.2UJ	<7.2U
1,2-Dichloropropane	4.7	0.0017	0.00013	<4.3UJ	<4.2U	<5.1U	<5.5U	<5.1U	<4.1U	<4.2U	<4.4U	<4.6U	<6.2UJ	<5.6U	<8.3U	<4.5U	<5.2UJ	<7.2U
1,3-Dichlorobenzene				<4.3UJ	<4.2U	<5.1U	<5.5U	<5.1U	<4.1U	<4.2U	<4.4U	<4.6U	<6.2UJ	<5.6U	<8.3U	<4.5U	<5.2UJ	<7.2U
1,4-Dichlorobenzene	12	0.072	0.0004	<4.3UJ	<4.2U	<5.1U	<5.5U	<5.1U	<4.1U	<4.2U	<4.4U	<4.6U	<6.2UJ	<5.6U	<8.3U	<4.5U	<5.2UJ	<7.2U
2-Butanone	200000		1	<10U	<11U	<13U	<14U	<13U	<10U	<11U	<13U	<18U	<62UJ	<56U	<83U	<45U	<52UJ	<72U
2-Hexanone	1400		0.0079	<11UJ	<11U	<13U	<14U	<13U	<10U	<11U	<11U	<11U	<31UJ	<28U	<41U	<23U	<26UJ	<36U
4-Methyl-2-pentanone	53000		0.23	<11UJ	<11U	<13U	**1.7J**	<13U	**1.0J**	**1.3J**	**1.8J**	<11U	<31UJ	<28U	<41U	<23U	<26UJ	<36U
Acetone	630000		2.4	**10J**	**54J**	**57**	**49**	**56**	**21J**	**44J**	**61J**	**78J**	<62UJ	<56U	<83U	<45U	**110J**	<72U
Benzene	5.4	0.0026	0.0002	<4.3UJ	<4.2U	<5.1U	<5.5U	<5.1U	**0.50J**	**0.48J**	**0.91J**	**0.76J**	<6.2UJ	<5.6U	<8.3U	<4.5U	<5.2UJ	<7.2U
Isopropyl benzene	11000		0.64	**1.3J**	**1.1J**	<5.1U	<5.5U	<5.1U	<4.1U	<4.2U	<4.4U	<4.6U	<6.2UJ	<5.6U	<8.3U	<4.5U	<5.2UJ	<7.2U
Bromodichloromethane	1.4	0.022	0.000032	<4.3UJ	<4.2U	<5.1U	<5.5U	<5.1U	<4.1U	<4.2U	<4.4U	<4.6U	<6.2UJ	<5.6U	<8.3U	<4.5U	<5.2UJ	<7.2U
Bromoform	220	0.021	0.0021	<4.3UJ	<4.2U	<5.1U	<5.5U	<5.1U	<4.1U	<4.2U	<4.4U	<4.6U	<6.2UJ	<5.6U	<8.3U	<4.5U	<5.2UJ	<7.2U
Bromomethane	32		0.0018	<4.3UJ	<4.2U	<5.1U	<5.5U	<5.1U	<4.1UJ	<4.2UJ	<4.4UJ	<4.6UJ	<12UJ	<11U	<16U	<9.1U	<10UJ	<14U
Carbon disulfide	3700		0.21	**1.3J**	**1.2J**	<5.1U	**14**	<5.1U	<4.1U	<4.2U	<4.4U	<4.6U	<6.2UJ	<5.6U	<8.3U	<4.5U	<5.2UJ	<7.2U
Carbon tetrachloride	3	0.0019	0.00015	<4.3UJ	<4.2U	<5.1U	<5.5U	<5.1U	<4.1U	<4.2U	<4.4U	<4.6U	<6.2UJ	<5.6U	<8.3U	<4.5U	<5.2UJ	<7.2U
CFC-11	3400		0.69	<4.3UJ	<4.2U	<5.1U	<5.5U	<5.1U	<4.1U	<4.2U	<4.4U	<4.6U	<12UJ	<11U	<16U	<9.1U	<10UJ	<14U
CFC-12	400		0.3	<4.3UJ	<4.2U	<5.1U	<5.5U	<5.1U	<4.1U	<4.2U	<4.4U	<4.6U	<12UJ	<11U	<16U	<9.1U	<10UJ	<14U
Chlorobenzene	1400	0.068	0.049	<4.3UJ	<4.2U	<5.1U	<5.5U	<5.1U	<4.1U	<4.2U	<4.4U	<4.6U	<6.2UJ	<5.6U	<8.3U	<4.5U	<5.2UJ	<7.2U
Chloroethane	61000		5.9	<4.3UJ	<4.2U	<5.1U	<5.5U	<5.1U	<4.1UJ	<4.2UJ	<4.4UJ	<4.6UJ	<12UJ	<11U	<16U	<9.1U	<10UJ	<14U
Chloroform	1.5	0.022	0.000053	<4.3UJ	<4.2U	<5.1U	<5.5U	<5.1U	<4.1U	<4.2U	<4.4U	<4.6U	<6.2UJ	<5.6U	<8.3U	<4.5U	<5.2UJ	<7.2U
Chloromethane	500		0.049	<4.3U	<4.2U	<5.1U	<5.5U	<5.1U	<4.1U	<4.2U	<4.4U	<4.6U	<12UJ	<11U	<16U	<9.1U	<10UJ	<14U
cis-1,2-Dichloroethene	2000	0.021	0.0082	**0.71J**	**0.69J**	<5.1U	<5.5U	<5.1U	<4.1U	<4.2U	<4.4U	**1.6J**	<6.2UJ	<5.6U	<8.3U	<4.5U	<5.2UJ	<7.2U
cis-1,3-Dichloropropene				<4.3UJ	<4.2U	<5.1U	<5.5U	<5.1U	<4.1U	<4.2U	<4.4U	<4.6U	<6.2UJ	<5.6U	<8.3U	<4.5U	<5.2UJ	<7.2U
Cyclohexane	29000		13	<4.3UJ	<4.2U	<5.1U	<5.5U	<5.1U	<4.1U	<4.2U	<4.4U	<4.6U	<12UJ	<11U	<16U	<9.1U	<10UJ	<14U
Dibromochloromethane	3.3	0.021	0.000039	<4.3UJ	<4.2U	<5.1U	<5.5U	<5.1U	<4.1U	<4.2U	<4.4U	<4.6U	<6.2UJ	<5.6U	<8.3U	<4.5U	<5.2UJ	<7.2U
Ethylbenzene	27	0.78	0.0015	**6.8J**	<4.2U	<5.1U	<5.5U	<5.1U	**0.90J**	<4.2U	<4.4U	<4.6U	<6.2UJ	<5.6U	<8.3U	<4.5U	<5.2UJ	<7.2U
Methyl acetate	1000000		3.2	<4.3UJ	<4.2U	<5.1U	<5.5U	<5.1U	<4.1UJ	<4.2UJ	<4.4UJ	<4.6UJ	<12UJ	<11U	<8.3U	<4.5U	<5.2UJ	<7.2U
Methylcyclohexane				<4.3UJ	<4.2U	<5.1U	<5.5U	<5.1U	<4.1U	<4.2U	<4.4U	<4.6U	<6.2UJ	<5.6U	<8.3U	<4.5U	<5.2UJ	<7.2U
Methylene chloride	960	0.0013	0.0025	<4.3UJ	<4.2U	<5.1U	<5.5U	<5.1U	<4.1U	<4.2U	<4.4U	<4.6U	<12UJ	<11U	<16U	<9.1U	<10UJ	<14U
Styrene	36000	0.11	1.2	<4.3UJ	<4.2U	<5.1U	<5.5U	<5.1U	<4.1U	<4.2U	<4.4U	<4.6U	<6.2UJ	<5.6U	<8.3U	<4.5U	<5.2UJ	<7.2U
tert-Butyl methyl ether	220		0.0028	<4.3UJ	<4.2U	<5.1U	<5.5U	<5.1U	<4.1U	<4.2U	<4.4U	<4.6U	<6.2UJ	<5.6U	<8.3U	<4.5U	<5.2UJ	<7.2U
Tetrachloroethene	110	0.0023	0.0044	<4.3UJ	<4.2U	<5.1U	**19**	**2.7J**	<4.1U	<4.2U	<4.4U	<4.6U	<6.2UJ	<5.6U	<8.3U	<4.5U	<5.2UJ	<7.2U
Toluene	45000	0.69	0.59	**8.1J**	<4.2U	<5.1U	<5.5U	<5.1U	<4.1U	<4.2U	<4.4U	<4.6U	<6.2UJ	**10**	**11**	<4.5U	<5.2UJ	<7.2U
trans-1,2-Dichloroethene	690	0.029	0.025	<4.3UJ	<4.2U	<5.1U	<5.5U	<5.1U	<4.1U	<4.2U	<4.4U	<4.6U	<6.2UJ	<5.6U	<8.3U	<4.5U	<5.2UJ	<7.2U
trans-1,3-Dichloropropene				<4.3UJ	<4.2U	<5.1U	<5.5U	<5.1U	<4.1U	<4.2U	<4.4U	<4.6U	<6.2UJ	<5.6U	<8.3U	<4.5U	<5.2UJ	<7.2U
Trichloroethene	6.4	0.0018	0.00016	**3.0J**	**2.5J**	<5.1U	**4.6J**	**0.81J**	<4.1U	<4.2U	<4.4U	<4.6U	<6.2UJ	<5.6U	<8.3U	<4.5U	<5.2UJ	<7.2U
Vinyl chloride	1.7	0.00069	0.0000053	<4.3UJ	<4.2U	<5.1U	<5.5U	<5.1U	<4.1U	<4.2U	<4.4U	<4.6U	<12UJ	<11U	<16U	<9.1U	<10UJ	<14U
Xylenes (total)	2700	9.8	0.19	**55J**	**2.9J**	<15U	<16U	<15U	**6.2J**	**4.3J**	**3.5J**	**2.3J**	<6.2UJ	<5.6U	<8.3U	<4.5U	<5.2UJ	<7.2U

Notes:

All screening levels listed from USEPA as of November 2012

Constituents are screened against the Industrial soil RSL and the MCL based SSL. If no MCL based SSL is established, then the risk based SSL is used.

U - Constituent concentration was not detected above posted laboratory detection limit

J - Constituent concentration was estimated

ft bgs - feet below ground surface

mg/kg - milligrams per kilogram

= Indicates the exceedence of one of the screening criteria.

Table 3-2
2004 Soil Analytical Data
SWMU 39
Fort Stewart, Georgia

			Location ID Sample Date Depth (ft bgs)	F39G4MW024 8/27/2004 8-10	F39G4MW025 8/27/2004 4-6	F39G4MW025 8/27/2004 8-10
Chemical Name	Industrial Soil RSL	MCL based SSL	Risk based SSL			
VOCs - U.S. EPA Method 8260 (mg/kg)						
1,1,1-Trichloroethane	38000	0.07	2.6	<5.4U	<5.5U	<5.3UJ
1,1,2,2-Tetrachloroethane	2.8		0.000026	<5.4U	<5.5U	<5.3UJ
1,1,2-Trichloro-1,2,2-Trifluoroethane	180000		130	<5.4U	<5.5U	<5.3UJ
1,1,2-Trichloroethane	5.3	0.0016	0.000077	<5.4U	<5.5U	<5.3UJ
1,1-Dichloroethane	17		0.00068	<5.4U	<5.5U	<5.3UJ
1,1-Dichloroethene	1100	0.0025	0.093	<5.4U	<5.5U	<5.3UJ
1,2,4-Trichlorobenzene	99	0.2	0.0029	<5.4U	<5.5U	<5.3UJ
1,2-Dibromo-3-chloropropane (DBCP)	0.069	0.000086	0.00000014	<11U	<11U	<10UJ
1,2-Dibromoethane	0.17	0.000014	0.0000018	<5.4U	<5.5U	<5.3UJ
1,2-Dichlorobenzene	9800	0.58	0.27	<5.4U	<5.5U	<5.3UJ
1,2-Dichloroethane	2.2	0.0014	0.000042	<5.4U	<5.5U	<5.3UJ
1,2-Dichloropropane	4.7	0.0017	0.00013	<5.4U	<5.5U	<5.3UJ
1,3-Dichlorobenzene				<5.4U	<5.5U	<5.3UJ
1,4-Dichlorobenzene	12	0.072	0.0004	**1.3J**	<5.5U	<5.3UJ
2-Butanone	200000		1	<54U	<55U	<53UJ
2-Hexanone	1400		0.0079	<27U	<27U	<26UJ
4-Methyl-2-pentanone	53000		0.23	<27U	<27U	<26UJ
Acetone	630000		2.4	<54U	<55U	**430J**
Benzene	5.4	0.0026	0.0002	<5.4U	<5.5U	<5.3UJ
Isopropyl benzene	11000		0.64	<5.4U	<5.5U	<5.3UJ
Bromodichloromethane	1.4	0.022	0.000032	<5.4U	<5.5U	<5.3UJ
Bromoform	220	0.021	0.0021	<5.4U	<5.5U	<5.3UJ
Bromomethane	32		0.0018	<11U	<11U	<10UJ
Carbon disulfide	3700		0.21	<5.4U	<5.5U	<5.3UJ
Carbon tetrachloride	3	0.0019	0.00015	<5.4U	<5.5U	<5.3UJ
CFC-11	3400		0.69	<11U	<11U	<10UJ
CFC-12	400		0.3	<11U	<11U	<10UJ
Chlorobenzene	1400	0.068	0.049	<5.4U	<5.5U	<5.3UJ
Chloroethane	61000		5.9	<11U	<11U	<10UJ
Chloroform	1.5	0.022	0.000053	<5.4U	<5.5U	<5.3UJ
Chloromethane	500		0.049	<11U	<11U	<10UJ
cis-1,2-Dichloroethene	2000	0.021	0.0082	<5.4U	<5.5U	<5.3UJ
cis-1,3-Dichloropropene				<5.4U	<5.5U	<5.3UJ
Cyclohexane	29000		13	<11U	<11U	<10UJ
Dibromochloromethane	3.3	0.021	0.000039	<5.4U	<5.5U	<5.3UJ
Ethylbenzene	27	0.78	0.0015	<5.4U	<5.5U	<5.3UJ
Methyl acetate	1000000		3.2	<11U	<5.5U	<10UJ
Methylcyclohexane				<5.4U	<5.5U	<5.3UJ
Methylene chloride	960	0.0013	0.0025	<11U	<11U	**20J**
Styrene	36000	0.11	1.2	<5.4U	<5.5U	<5.3UJ
tert-Butyl methyl ether	220		0.0028	<5.4U	<5.5U	<5.3UJ
Tetrachloroethene	110	0.0023	0.0044	<5.4U	<5.5U	<5.3UJ
Toluene	45000	0.69	0.59	<5.4U	<5.5U	<5.3UJ
trans-1,2-Dichloroethene	690	0.029	0.025	<5.4U	<5.5U	<5.3UJ
trans-1,3-Dichloropropene				<5.4U	<5.5U	<5.3UJ
Trichloroethene	6.4	0.0018	0.00016	<5.4U	<5.5U	<5.3UJ
Vinyl chloride	1.7	0.00069	0.0000053	<11U	<11U	<10UJ
Xylenes (total)	2700	9.8	0.19	**0.97J**	<5.5U	<5.3UJ

Notes:

All screening levels listed from USEPA as of April 2012

Constituents are screened against the Industrial soil RSL and the MCL based SSL. If no MCL based SSL is established, then the risk based SSL is used.

U - Constituent concentration was not detected above posted laboratory detection limit

J - Constituent concentration was estimated

ft bgs - feet below ground surface

mg/kg - milligrams per kilogram

= Indicates the exceedence of one of the screening criteria.

Table 3-3
2004 Surface Water Analytical Data
SWMU 39
Fort Stewart, Georgia

		Location ID Sample Date	F39-SW04106W01D 4/15/2004	F39-SW04106W01M 4/15/2004
Chemical Name	IWQS[1]	Tapwater RSL[2]		
VOCs - U.S. EPA Method 8260 (µg/L)				
1,1,1-Trichloroethane		7500	0.50U	0.50U
1,1,2,2-Tetrachloroethane	4	0.066	0.50U	0.50U
1,1,2-Trichloro-1,2,2-Trifluoroethane			0.50U	0.50U
1,1,2-Trichloroethane	16	0.24	0.50U	0.50U
1,1-Dichloroethane		2.4	0.50U	0.50U
1,1-Dichloroethene	7100	260	0.50U	0.50U
1,2,4-Trichlorobenzene	70	0.99	0.50U	0.50U
1,2-Dibromo-3-chloropropane (DBCP)		0.00032	0.50R	0.50R
1,2-Dibromoethane		0.0065	0.50U	0.50U
1,2-Dichlorobenzene	1300	280	0.50U	0.50U
1,2-Dichloroethane	37	0.15	0.50U	0.50U
1,2-Dichloropropane	15	0.38	0.50U	0.50U
1,3-Dichlorobenzene	960		0.50U	0.50U
1,4-Dichlorobenzene	190	0.42	0.50U	0.50U
2-Butanone		4900	2.5UJ	2.5UJ
2-Hexanone		34	2.5UJ	2.5UJ
4-Methyl-2-pentanone		1000	2.5U	2.5U
Acetone		12000	8.5U	8.9U
Benzene	51	0.39	0.50U	0.50U
Benzene, 1-methylethyl		390	0.50U	0.50U
Bromodichloromethane	17	0.12	0.50U	0.50U
Bromoform	140	7.9	0.50U	0.50U
Bromomethane	1500	7	0.50U	0.50U
Carbon disulfide		720	0.50U	0.50U
Carbon tetrachloride	1.6	0.39	0.50U	0.50U
CFC-11		1100	0.50U	0.50U
CFC-12		190	0.50UJ	0.50UJ
Chlorobenzene	1600	72	0.50U	0.50U
Chloroethane		21000	0.50U	0.50U
Chloroform	470	0.19	0.50U	0.50U
Chloromethane		190	0.50U	0.50U
cis-1,2-Dichloroethene		28	**0.67**	**0.65**
cis-1,3-Dichloropropene			0.50U	0.50U
Cyclohexane		13000	0.50U	0.50U
Dibromochloromethane	13	0.15	0.50U	0.50U
Ethylbenzene	2100	1.3	0.50U	0.50U
Methyl acetate		16000	0.50U	0.50U
Methylcyclohexane			0.50U	0.50U
Methylene chloride	590	9.9	0.50U	0.50U
Styrene		1100	0.50U	0.50U
tert-Butyl methyl ether		12	0.50U	0.50U
Tetrachloroethene	3.3	9.7	**0.94**	**0.87**
Toluene	5980	860	0.50U	0.53U
trans-1,2-Dichloroethene	10000	86	**0.10J**	**0.12J**
trans-1,3-Dichloropropene			0.50U	0.50U
Trichloroethene	30	0.44	**2.5**	**2.5**
Vinyl chloride	2.4	0.015	0.50U	0.50U
Xylenes (total)		190	0.50U	0.50U

Notes:

	Sample results were screened against the IWQS. If no IWQS is established, then the tap water RSL was used as the screening criteria.
1	Georgia Environmental Protection Division Instream Water Quality Standards as of 2011.
2	USEPA tap water RSL as of November 2012.
µg/L	Micrograms per liter.
U	Constituent concentration was not detected above posted laboratory detection limit.
J	Constituent concentration was estimated.
R	Sample result was rejected.
VOCs	Volatile Organic Compounds.

Table 3-4
2004 Sediment Analytical Data
SWMU 39
Fort Stewart, Georgia

	Location ID Sample Date	F39SED04106D01 4/15/2004	F39SED04106D01-DUP 4/15/2004
Chemical Name	Residential RSL[1]		
VOCs - U.S. EPA Method SW8260 (mg/kg)			
1,1,1-Trichloroethane	8700	0.017U	0.014U
1,1,2,2-Tetrachloroethane	0.56	0.017U	0.014U
1,1,2-Trichloro-1,2,2-Trifluoroethane	43000	0.017U	0.014U
1,1,2-Trichloroethane	1.1	0.017U	0.014U
1,1-Dichloroethane	3.3	0.017U	0.014U
1,1-Dichloroethene	240	0.017U	0.014U
1,2,4-Trichlorobenzene	22	0.017U	0.014U
1,2-Dibromo-3-chloropropane (DBCP)	0.0054	0.017U	0.014U
1,2-Dibromoethane	0.034	0.017U	0.014U
1,2-Dichlorobenzene	1900	0.017U	0.014U
1,2-Dichloroethane	0.43	0.017U	0.014U
1,2-Dichloropropane	0.94	0.017U	0.014U
1,3-Dichlorobenzene		0.017U	0.014U
1,4-Dichlorobenzene	2.4	0.017U	0.014U
2-Butanone	28000	**0.0085J**	**0.0075J**
2-Hexanone	210	0.042U	0.034U
4-Methyl-2-pentanone	5300	**0.0047J**	0.034U
Acetone	61000	**0.057**	**0.051**
Benzene	1.1	0.017U	0.014U
Benzene, 1-methylethyl	2100	0.017U	0.014U
Bromodichloromethane	0.27	0.017U	0.014U
Bromoform	62	0.017U	0.014U
Bromomethane	7.3	0.017UJ	0.014UJ
Carbon disulfide	820	**0.015J**	**0.018**
Carbon tetrachloride	0.61	0.017U	0.014U
CFC-11	790	0.017U	0.014U
CFC-12	94	0.017U	0.014U
Chlorobenzene	290	0.017U	0.014U
Chloroethane	15000	0.017U	0.014U
Chloroform	0.29	0.017U	0.014U
Chloromethane	120	0.017U	**0.025J**
cis-1,2-Dichloroethene	160	**0.036**	**0.021**
cis-1,3-Dichloropropene		0.017U	0.014U
Cyclohexane	7000	0.017U	0.014U
Dibromochloromethane	0.68	0.017U	0.014U
Ethylbenzene	5.4	0.017U	0.014U
Methyl acetate	78000	0.017U	0.014U
Methylcyclohexane		0.017U	0.014U
Methylene chloride	56	0.017U	0.014U
Styrene	6300	0.017U	0.014U
tert-Butyl methyl ether	43	0.017U	0.014U
Tetrachloroethene	22	0.017U	0.014U
Toluene	5000	**0.0025J**	**0.0026J**
trans-1,2-Dichloroethene	150	**0.0028J**	**0.0028J**
trans-1,3-Dichloropropene		0.017U	0.014U
Trichloroethene	0.91	**0.0040J**	**0.0040J**
Vinyl chloride	0.06	0.017U	**0.0026J**
Xylenes (total)	630	0.050U	0.041U

Notes:

[1]	USEPA Residential Regional Screening Level for residential soil as of November 2012.
1	Constituent concentration exceeds the USEPA residential soil RSL.
mg/kg	Milligrams per kilogram.
U	Constituent concentration was qualified as nondetect.
J	Constituent concentration was estimated.
VOCs	Volatile Organic Compounds.

Table 3-5
2008 DPT Groundwater Screening Results
SWMU 39
Fort Stewart, Georgia

		Location ID	SWMU-39-1A	SWMU-39-1A	SWMU-39-1A	SWMU-39-1A	SWMU-39-1A	SWMU-39-1B	SWMU-39-1B	SWMU-39-1B	SWMU-39-1B
		Sample Date	2/7/2008	2/7/2008	2/7/2008	2/7/2008	2/7/2008	2/7/2008	2/7/2008	2/7/2008	2/7/2008
		Sample depth (ft bls)	12	17	22	27	30	8	13	18	23
Chemical Name	Tap water RSL [1]	MCL [2]									
VOCs - U.S. EPA Method 8260B (µg/L)											
1,1-Dichloroethene	260	7	< 1 U	< 1 U	< 1 U	< 1 U	< 1 U	**1**	< 1 U	< 1 U	< 1 U
cis-1,2-Dichloroethene	28	70	**5**	**2.9**	< 1 U	**9**	**2.2**	**8.8**	**12.4**	**13.2**	**9.8**
Tetrachloroethene	9.7	5	< 1 U	< 1 U	< 1 U	**13.3**	**1**	**1.8**	**3.7**	**27.4**	**29.1**
trans-1,2-Dichloroethene	86	100	**1.1**	< 1 U	< 1 U	< 1 U	< 1 U	**1.1**	< 1 U	< 1 U	< 1 U
Trichloroethene	0.44	5	**17.8**	**13.5**	< 1 U	**29.7**	**3.9**	**7.6**	**18.4**	**46.8**	**44.3**
Vinyl chloride	0.015	2	< 1 U	< 1 U	< 1 U	< 1 U	< 1 U	< 1 U	< 1 U	< 1 U	< 1 U

		Location ID	SWMU-39-1B	SWMU-39-1C	SWMU-39-1C	SWMU-39-1C	SWMU-39-1C	SWMU-39-1D	SWMU-39-1D	SWMU-39-1D	SWMU-39-1E
		Sample Date	2/7/2008	2/8/2008	2/8/2008	2/8/2008	2/8/2008	2/8/2008	2/8/2008	2/8/2008	2/8/2008
		Sample depth (ft bls)	28	8	13	18	23	7	12	18	8
Chemical Name	Tap water RSL [1]	MCL [2]									
VOCs - U.S. EPA Method 8260B (µg/L)											
1,1-Dichloroethene	260	7	< 1 U	< 1 U	< 1 U	< 1 U	< 1 U	< 1 U	< 1 U	< 1 U	< 1 U
cis-1,2-Dichloroethene	28	70	**3.5**	**24.6**	**26.6**	**35.8**	**54**	**1**	< 1 U	< 1 U	< 1 U
Tetrachloroethene	9.7	5	**3.4**	< 1 U	< 1 U	< 1 U	< 1 U	< 1 U	< 1 U	< 1 U	< 1 U
trans-1,2-Dichloroethene	86	100	< 1 U	**3.1**	**5**	**7.4**	**11**	< 1 U	< 1 U	< 1 U	< 1 U
Trichloroethene	0.44	5	**7.1**	**15.6**	**24.6**	**24.8**	**8.5**	< 1 U	**2.4**	**5.6**	< 1 U
Vinyl chloride	0.015	2	< 1 U	< 1 U	< 1 U	< 1 U	< 1 U	< 1 U	< 1 U	< 1 U	< 1 U

		Location ID	SWMU-39-1E	SWMU-39-1E	SWMU-39-1E	SWMU-39-1F	SWMU-39-1F	SWMU-39-1F	SWMU-39-1F	SWMU-39-1G	SWMU-39-1G
		Sample Date	2/8/2008	2/8/2008	2/8/2008	2/9/2008	2/9/2008	2/9/2008	2/9/2008	2/9/2008	2/9/2008
		Sample depth (ft bls)	13	18	23	7	12	17	23	12	17
Chemical Name	Tap water RSL [1]	MCL [2]									
VOCs - U.S. EPA Method 8260B (µg/L)											
1,1-Dichloroethene	260	7	< 1 U	< 1 U	< 1 U	< 1 U	< 1 U	< 1 U	< 1 U	< 1 U	< 1 U
cis-1,2-Dichloroethene	28	70	< 1 U	< 1 U	< 1 U	**2.3**	**1.5**	**1.1**	**1**	**1.4**	**2.3**
Tetrachloroethene	9.7	5	< 1 U	< 1 U	< 1 U	< 1 U	< 1 U	< 1 U	< 1 U	< 1 U	< 1 U
trans-1,2-Dichloroethene	86	100	< 1 U	< 1 U	< 1 U	< 1 U	< 1 U	< 1 U	< 1 U	< 1 U	< 1 U
Trichloroethene	0.44	5	**1.6**	**3.9**	< 1 U	**2**	**2.5**	**2**	**1.4**	**1**	**2.4**
Vinyl chloride	0.015	2	< 1 U	< 1 U	< 1 U	< 1 U	< 1 U	< 1 U	< 1 U	< 1 U	< 1 U

		Location ID	SWMU-39-1H	SWMU-39-1H	SWMU-39-1H	SWMU-39-1LR	SWMU-39-1LR	SWMU-39-2B	SWMU-39-2B	SWMU-39-2C	SWMU-39-2C
		Sample Date	2/9/2008	2/9/2008	2/9/2008	2/14/2008	2/14/2008	2/9/2008	2/9/2008	2/10/2008	2/10/2008
		Sample depth (ft bls)	8	13	18	18	23	8	13	8	13
Chemical Name	Tap water RSL [1]	MCL [2]									
VOCs - U.S. EPA Method 8260B (µg/L)											
1,1-Dichloroethene	260	7	< 1 U	< 1 U	1	< 2 U	1.3	< 1 U	< 1 U	**2.4**	< 1 U
cis-1,2-Dichloroethene	28	70	**2.9**	**27**	**24.3**	**4.3**	**11.6**	**10.6**	**10.9**	**9.1**	**26.4**
Tetrachloroethene	9.7	5	< 1 U	< 1 U	< 1 U	< 2 U	**1.2**	**4.2**	**1.5**	< 1 U	< 1 U
trans-1,2-Dichloroethene	86	100	< 1 U	**3.6**	**6.4**	< 2 U	**3.8**	< 1 U	**1.4**	**1.4**	**5**
Trichloroethene	0.44	5	< 1 U	**1.3**	**9.8**	**6.1**	**25.3**	**32.9**	**32.2**	**14.6**	**23.3**
Vinyl chloride	0.015	2	< 1 U	< 1 U	< 1 U	< 2 U	< 1 U	< 1 U	< 1 U	< 1 U	< 1 U

Footnotes appear on last page

Table 3-5
2008 DPT Groundwater Screening Results
SWMU 39
Fort Stewart, Georgia

		Location ID	SWMU-39-2C	SWMU-39-2D	SWMU-39-2D	SWMU-39-2D	SWMU-39-2D	SWMU-39-2D	SWMU-39-2D	SWMU-39-2E	SWMU-39-2E
		Sample Date	2/10/2008	2/10/2008	2/10/2008	2/10/2008	2/10/2008	2/10/2008	2/10/2008	2/10/2008	2/10/2008
		Sample depth (ft bls)	18	8	13	18	23	28	30	10	15
Chemical Name	Tap water RSL [1]	MCL [2]									
VOCs - U.S. EPA Method 8260B (µg/L)											
1,1-Dichloroethene	260	7	< 1 U	**1.2**	< 1 U	< 1 U	< 1 U	< 1 U	< 1 U	< 1 U	< 1 U
cis-1,2-Dichloroethene	28	70	**23.1**	**9.8**	< 1 U	< 1 U	< 1 U	**1.3**	**1.4**	< 1 U	< 1 U
Tetrachloroethene	9.7	5	< 1 U	< 1 U	< 1 U	< 1 U	< 1 U	< 1 U	< 1 U	< 1 U	< 1 U
trans-1,2-Dichloroethene	86	100	**5.1**	**1.4**	< 1 U	< 1 U	< 1 U	< 1 U	< 1 U	< 1 U	< 1 U
Trichloroethene	0.44	5	**19.2**	**8.7**	< 1 U	< 1 U	< 1 U	**6.7**	**10.1**	< 1 U	**3.2**
Vinyl chloride	0.015	2	< 1 U	< 1 U	< 1 U	< 1 U	< 1 U	< 1 U	< 1 U	< 1 U	< 1 U

		Location ID	SWMU-39-2E	SWMU-39-3A	SWMU-39-3A	SWMU-39-3A	SWMU-39-3B	SWMU-39-3B	SWMU-39-3C	SWMU-39-3C	SWMU-39-3D
		Sample Date	2/10/2008	2/14/2008	2/14/2008	2/14/2008	2/10/2008	2/10/2008	2/10/2008	2/10/2008	2/12/2008
		Sample depth (ft bls)	20	10	15	20	8	13	8	13	8
Chemical Name	Tap water RSL [1]	MCL [2]									
VOCs - U.S. EPA Method 8260B (µg/L)											
1,1-Dichloroethene	260	7	< 1 U	< 1 U	< 1 U	< 1 U	< 1 U	< 1 U	**1**	**7**	< 1 U
cis-1,2-Dichloroethene	28	70	< 1 U	**4**	**4**	**3**	**12.1**	**12.3**	**5.4**	**70**	< 1 U
Tetrachloroethene	9.7	5	< 1 U	**6.2**	**4.8**	**2.4**	< 1 U	**1.3**	< 1 U	**5**	< 1 U
trans-1,2-Dichloroethene	86	100	< 1 U	< 1 U	< 1 U	< 1 U	**1.7**	**1.3**	< 1 U	**100**	< 1 U
Trichloroethene	0.44	5	**3.1**	**27.8**	**21.1**	**11.5**	**27.1**	**34.8**	**7.1**	**5**	< 1 U
Vinyl chloride	0.015	2	< 1 U	< 1 U	< 1 U	< 1 U	< 1 U	< 1 U	< 1 U	< 1 U	< 1 U

		Location ID	SWMU-39-3D	SWMU-39-3D	SWMU-39-3D	SWMU-39-3D	SWMU-39-3D	SWMU-39-3H	SWMU-39-3H	SWMU-39-3H	SWMU-39-3H
		Sample Date	2/12/2008	2/12/2008	2/12/2008	2/12/2008	2/12/2008	2/14/2008	2/14/2008	2/14/2008	2/14/2008
		Sample depth (ft bls)	13	18	23	28	30	13	18	23	28
Chemical Name	Tap water RSL [1]	MCL [2]									
VOCs - U.S. EPA Method 8260B (µg/L)											
1,1-Dichloroethene	260	7	< 1 U	< 1 U	< 2 U	< 1 U	< 1 U	< 1 U	**1.6**	**1.5**	**3**
cis-1,2-Dichloroethene	28	70	< 1 U	< 1 U	< 2 U	< 1 U	< 1 U	< 1 U	**15**	**15**	**13.2**
Tetrachloroethene	9.7	5	< 1 U	< 1 U	< 2 U	< 1 U	< 1 U	< 1 U	< 1 U	< 1 U	< 1 U
trans-1,2-Dichloroethene	86	100	< 1 U	< 1 U	< 2 U	< 1 U	< 1 U	< 1 U	**5.1**	**4.5**	**4.3**
Trichloroethene	0.44	5	< 1 U	< 1 U	< 2 U	**3.1**	**2.5**	< 1 U	**8.9**	**5.8**	**1**
Vinyl chloride	0.015	2	< 1 U	< 1 U	< 2 U	< 1 U	< 1 U	< 1 U	< 1 U	< 1 U	< 1 U

		Location ID	SWMU-39-4A	SWMU-39-4A	SWMU-39-4A	SWMU-39-4A	SWMU-39-4A	SWMU-39-4B	SWMU-39-4C	SWMU-39-4C	SWMU-39-4C
		Sample Date	2/14/2008	2/14/2008	2/14/2008	2/14/2008	2/14/2008	2/13/2008	2/13/2008	2/13/2008	2/13/2008
		Sample depth (ft bls)	10	15	20	25	30	8	8	13	18
Chemical Name	Tap water RSL [1]	MCL [2]									
VOCs - U.S. EPA Method 8260B (µg/L)											
1,1-Dichloroethene	260	7	< 1 U	< 2 U	< 2 U	< 1 U	< 1 U	< 1 U	< 1 U	< 1 U	< 1 U
cis-1,2-Dichloroethene	28	70	**1**	< 2 U	**2.2**	**6.8**	**1.7**	**10.4**	< 1 U	**3.4**	**6**
Tetrachloroethene	9.7	5	< 1 U	**9.2**	**5.2**	**23.6**	**2.5**	**6.7**	**1**	**11.1**	**12.2**
trans-1,2-Dichloroethene	86	100	< 1 U	< 2 U	< 2 U	< 1 U	< 1 U	**2.3**	< 1 U	< 1 U	< 1 U
Trichloroethene	0.44	5	**5**	**14**	**12**	**40.6**	**7.2**	**32.6**	**1**	**23.6**	**38.5**
Vinyl chloride	0.015	2	< 1 U	< 2 U	< 2 U	< 1 U	< 1 U	< 1 U	< 1 U	< 1 U	< 1 U

Footnotes appear on last page

Table 3-5
2008 DPT Groundwater Screening Results
SWMU 39
Fort Stewart, Georgia

		Location ID	SWMU-39-4C	SWMU-39-4D	SWMU-39-4D	SWMU-39-4D
		Sample Date	2/13/2008	2/13/2008	2/13/2008	2/13/2008
		Sample depth (ft bls)	23	8	18	30
Chemical Name	Tap water RSL [1]	MCL [2]				
VOCs - U.S. EPA Method 8260B (µg/L)						
1,1-Dichloroethene	260	7	< 1 U	< 1 U	< 1 U	< 1 U
cis-1,2-Dichloroethene	28	70	**4.9**	< 1 U	< 1 U	**1.8**
Tetrachloroethene	9.7	5	**18.5**	< 1 U	< 1 U	< 1 U
trans-1,2-Dichloroethene	86	100	< 1 U	< 1 U	< 1 U	< 1 U
Trichloroethene	0.44	5	**35.6**	< 1 U	< 1 U	**9.4**
Vinyl chloride	0.015	2	< 1 U	< 1 U	< 1 U	< 1 U

Notes:

[1]	USEPA Regional Screening Level for tap water as of November 2012.
[2]	USEPA Maximum Contaminant Level as of November 2012.
18.5	Constituent concentration exceeds the USEPA tap water RSL.
18.5	Constituent concentration exceeds the USEPA MCL.
µg/L	Micrograms per liter.
U	Constituent concentration was qualified as nondetect.
ft bls	Feet below land surface.
VOCs	Volatile Organic Compounds.

Table 4-1
Summary of Monitoring Well Construction Details
SWMU 39
Fort Stewart, Georgia

Monitoring Well ID	TOC Elevation (ft msl)	Well Diameter (inches)	Screen length (ft)	Screened Interval (ft bgs)	Aquifer Zone
G4MW001	74.82	1	10	6 - 16	Shallow
G4MW002	74.33	1	10	5 - 15	Shallow
G4MW003	74.57	1	10	5 - 15	Shallow
G4MW004	74.51	1	10	5 - 15	Shallow
G4MW005	74.29	1	10	5 - 15	Shallow
G4MW006	74.38	1	10	5 - 15	Shallow
G4MW007R	74.74	4	10	5 - 15	Shallow
G4MW008	74.36	1	10	5 - 15	Shallow
G4MW009	74.75	2	10	4 - 14	Shallow
G4MW010	74.23	2	10	5 - 15	Shallow
G4MW011	74.08	2	10	5 - 15	Shallow
G4MW012	74.27	2	10	5 - 15	Shallow
G4MW013R	74.70	4	10	4 - 14	Shallow
G4MW014	74.96	2	10	2 - 12	Shallow
G4MW015	74.82	2	10	2 - 12	Shallow
G4MW016	72.28	1	10	3 - 13	Shallow
G4MW017	71.84	1	10	2 - 12	Shallow
G4MW018	74.27	1	10	2 - 12	Shallow
G4MW019	74.76	1	10	2 - 12	Shallow
G4MW020	74.64	1	10	2 - 12	Shallow
G4MW021	74.18	1	10	2 - 12	Shallow
G4MW022	72.59	2	10	3 - 13	Shallow
G4MW023	75.58	2	10	5 - 15	Shallow
G4MW024	74.41	2	10	5 - 15	Shallow
G4MW025	74.52	2	10	3 - 13	Shallow
G4MW026	76.01	2	10	9 - 19	Shallow
G4MW027	76.50	2	10	10 - 20	Shallow
G4MW028	82.91	2	10	9 - 19	Shallow
G4MW029	84.07	2	10	5 - 15	Shallow
G4MW030	67.64	2	10	10 - 20	Shallow
G4MW031	78.96	2	10	10 - 20	Shallow
G4MW032	74.27	2	10	35 - 45	Deep
G4MW033	74.23	2	10	5 - 15	Shallow
G4MW034	70.19	2	5	40 - 45	Deep
G4MW035	70.52	2	10	6 - 16	Shallow
G4MW036	83.62	2	5	40 - 45	Deep
G4MW037	82.47	2	10	34.5 - 44.5	Deep
G4MW038	85.12	2	10	35 - 45	Deep
G4MW039	86.02	2	10	35 - 45	Deep
G4MW040	72.21	2	10	35 - 45	Deep
G4MW041	84.24	2	10	35 - 45	Deep
G4MW042	77.24	2	10	35 - 45	Deep
G4MW043	72.58	2	10	14 - 24	Shallow
G4MW044	75.64	2	10	4.5 - 14.5	Shallow
G4MW045	75.44	2	10	20 - 30	Deep
G4MW046	77.15	2	10	9 - 19	Shallow
G4MW047	77.09	2	10	25 - 35	Deep
G4MW048	84.93	2	10	10 - 20	Shallow
G4MW049	84.86	2	10	25 - 35	Deep
G4MW050	83.26	2	10	35 - 45	Deep
G4MW051	84.02	2	10	50 - 60	Deep
G4MW052	83.78	2	10	35 - 45	Deep
G4MW053	74.78	2	10	35 - 45	Deep
G4MW054	71.59	1	5	2.2 - 7.2	Shallow
G4MW055	84.17	2	10	88 - 98	Deep
G4MW056	84.44	2	10	33.6 - 43.6	Deep
G4MW057	78.14	2	10	35 - 45	Deep
G4MW058	84.71	2	10	36 - 46	Deep
22-07R	75.38	4	5	5 - 10	Shallow
22-08	75.79	0.75	7	2.6 - 9.6	Shallow
22-09	75.52	0.75	7	2.4 - 9.4	Shallow

Notes:

TOC	Top of Casing
ft bgs	Feet below ground surface
ft msl	Feet Above Mean Sea Level

Table 4-2
March 2010 Water Levels
SWMU-39
Fort Stewart, Georgia

Monitoring Well ID	TOC Elevation (feet amsl)	Depth to Product (feet btoc)	Depth to Water (feet btoc)	Water Elevation (feet amsl) (Calculated)*	Product Elevation (feet amsl)	Product Thickness (feet)
G4MW001	74.82	4.65	5.90	70.05	70.17	1.25
G4MW002	74.33	3.81	5.61	70.34	70.52	1.8
G4MW003	74.57	ND	NM	NA	NA	NA
G4MW004	74.51	ND	NM	NA	NA	NA
G4MW006	74.38	ND	5.08	69.30	NA	NA
G4MW009	74.75	ND	NM	NA	NA	NA
G4MW010	74.23	ND	NM	NA	NA	NA
G4MW011	74.08	ND	5.34	68.74	NA	NA
G4MW016	72.28	ND	3.76	68.52	NA	NA
G4MW017	71.84	ND	4.71	67.13	NA	NA
G4MW018	74.27	ND	4.24	70.03	NA	NA
G4MW019	74.76	ND	3.93	70.83	NA	NA
G4MW020	74.64	ND	3.81	70.83	NA	NA
G4MW021	74.18	ND	NM	NA	NA	NA
G4MW023	75.58	ND	7.09	68.49	NA	NA
G4MW024	74.41	ND	5.46	68.95	NA	NA
G4MW025	74.52	ND	3.93	70.59	NA	NA
G4MW027	76.50	ND	3.92	72.58	NA	NA
G4MW028	82.91	ND	3.43	79.48	NA	NA
G4MW029	84.07	ND	5.50	78.57	NA	NA
G4MW031	78.96	ND	4.39	74.57	NA	NA

Notes:
*Water level compensated for the presence of Light Non-Aqueous Phase Liquids (LNAPL) if detected.
NA = Not Applicable.
ND = Not Detected.
NM = Not Measured.
amsl = above mean sea level.
btoc = below top of casing

Table 4-3
March through April 2010 Groundwater Analytical Data
SWMU 39
Fort Stewart, Georgia

		Location ID	G4MW006	G4MW010	G4MW011	G4MW016	G4MW017	G4MW018	G4MW019	G4MW020	G4MW023	G4MW024	G4MW025	G4MW027	G4MW027 DUP	G4MW028	G4MW029	G4MW031	G4MW033	G4MW034	G4MW035	G4MW036
		Sample Date	3/12/2010	3/12/2010	3/11/2010	3/10/2010	3/10/2010	3/12/2010	3/10/2010	3/10/2010	3/10/2010	3/10/2010	3/10/2010	3/11/2010	3/11/2010	3/11/2010	3/11/2010	3/10/2010	4/7/2010	4/6/2010	4/6/2010	4/6/2010
Chemical Name	Tap Water RSL[1]	MCL[2]																				
VOCs - USEPA Method SW8260 (µg/L)																						
1,1,1-Trichloroethane	7500	200	< 0.5 U	< 0.5 U	< 0.5 U	< 0.5 U	< 0.5 U	< 0.5 U	< 0.5 U	< 0.5 U	< 0.5 U	< 0.5 U	< 0.5 U	< 0.5 U	< 0.5 U	< 0.5 U	< 0.5 U	< 0.5 U	< 0.5 U	< 0.5 U	< 0.5 U	< 0.5 U
1,1,2,2-Tetrachloroethane	0.066		< 0.5 U	< 0.5 U	< 0.5 U	< 0.5 U	< 0.5 U	< 0.5 U	< 0.5 U	< 0.5 U	< 0.5 U	< 0.5 U	< 0.5 U	< 0.5 U	< 0.5 U	< 0.5 U	< 0.5 U	< 0.5 U	< 0.5 U	< 0.5 U	< 0.5 U	< 0.5 U
1,1,2-Trichloro-1,2,2-Trifluoroethane	53000		< 0.5 U	< 0.5 U	< 0.5 U	< 0.5 U	< 0.5 U	< 0.5 U	< 0.5 U	< 0.5 U	< 0.5 U	< 0.5 U	< 0.5 U	< 0.5 U	< 0.5 U	< 0.5 U	< 0.5 U	< 0.5 U	< 0.5 U	< 0.5 U	< 0.5 U	< 0.5 U
1,1,2-Trichloroethane	0.24	5	< 0.5 U	< 0.5 U	< 0.5 U	< 0.5 U	< 0.5 U	< 0.5 U	< 0.5 U	< 0.5 U	< 0.5 U	< 0.5 U	< 0.5 U	< 0.5 U	< 0.5 U	< 0.5 U	< 0.5 U	< 0.5 U	< 0.5 U	< 0.5 U	< 0.5 U	< 0.5 U
1,1-Dichloroethane	2.4		**0.18 J**	< 0.5 U	**0.17 J**	< 0.5 U	< 0.5 U	**0.13 J**	**0.16 J**	< 0.5 U	< 0.5 U	**0.11 J**	**0.23 J**	< 0.5 U	< 0.5 U	< 0.5 U	< 0.5 U	< 0.5 U	< 0.5 U	< 0.5 U	< 0.5 U	< 0.5 U
1,1-Dichloroethene	260	7	**0.48 J**	**0.14 J**	**0.42 J**	**0.13 J**	< 0.5 U	**0.32 J**	**0.43 J**	**0.13 J**	< 0.5 U	**0.28 J**	**0.38 J**	< 0.5 U	< 0.5 U	< 0.5 U	< 0.5 U	< 0.5 U	**0.31 J**	< 0.5 U	< 0.5 U	< 0.5 U
1,2,4-Trichlorobenzene	0.99	70	< 0.5 U	< 0.5 U	< 0.5 U	< 0.5 U	< 0.5 U	< 0.5 U	< 0.5 U	< 0.5 U	< 0.5 U	< 0.5 U	< 0.5 U	< 0.5 U	< 0.5 U	< 0.5 U	< 0.5 U	< 0.5 U	< 0.5 U	< 0.5 U	< 0.5 U	< 0.5 U
1,2-Dibromo-3-chloropropane (DBCP)	0.00032	0.2	< 0.5 U	< 0.5 U	< 0.5 U	< 0.5 U	< 0.5 U	< 0.5 U	< 0.5 U	< 0.5 U	< 0.5 U	< 0.5 U	< 0.5 U	< 0.5 U	< 0.5 U	< 0.5 U	< 0.5 U	< 0.5 U	< 0.5 U	< 0.5 U	< 0.5 U	< 0.5 U
1,2-Dibromoethane	0.0065	0.05	< 0.5 U	< 0.5 U	< 0.5 U	< 0.5 U	< 0.5 U	< 0.5 U	< 0.5 U	< 0.5 U	< 0.5 U	< 0.5 U	< 0.5 U	< 0.5 U	< 0.5 U	< 0.5 U	< 0.5 U	< 0.5 U	< 0.5 U	< 0.5 U	< 0.5 U	< 0.5 U
1,2-Dichlorobenzene	280	600	< 0.5 U	< 0.5 U	< 0.5 U	< 0.5 U	< 0.5 U	< 0.5 U	< 0.5 U	< 0.5 U	< 0.5 U	< 0.5 U	< 0.5 U	< 0.5 U	< 0.5 U	< 0.5 U	< 0.5 U	< 0.5 U	< 0.5 U	< 0.5 U	< 0.5 U	< 0.5 U
1,2-Dichloroethane	0.15	5	< 0.5 U	< 0.5 U	< 0.5 U	< 0.5 U	< 0.5 U	< 0.5 U	< 0.5 U	< 0.5 U	< 0.5 U	< 0.5 U	< 0.5 U	< 0.5 U	< 0.5 U	< 0.5 U	< 0.5 U	< 0.5 U	< 0.5 U	< 0.5 U	< 0.5 U	< 0.5 U
1,2-Dichloropropane	0.38	5	< 0.5 U	< 0.5 U	< 0.5 U	< 0.5 U	< 0.5 U	< 0.5 U	< 0.5 U	< 0.5 U	< 0.5 U	< 0.5 U	< 0.5 U	< 0.5 U	< 0.5 U	< 0.5 U	< 0.5 U	< 0.5 U	< 0.5 U	< 0.5 U	< 0.5 U	< 0.5 U
1,3-Dichlorobenzene			< 0.5 U	< 0.5 U	< 0.5 U	< 0.5 U	< 0.5 U	< 0.5 U	< 0.5 U	< 0.5 U	< 0.5 U	< 0.5 U	< 0.5 U	< 0.5 U	< 0.5 U	< 0.5 U	< 0.5 U	< 0.5 U	< 0.5 U	< 0.5 U	< 0.5 U	< 0.5 U
1,4-Dichlorobenzene	0.42	75	< 0.5 U	< 0.5 U	< 0.5 U	< 0.5 U	< 0.5 U	< 0.5 U	< 0.5 U	< 0.5 U	< 0.5 U	< 0.5 U	< 0.5 U	< 0.5 U	< 0.5 U	< 0.5 U	< 0.5 U	< 0.5 U	< 0.5 U	< 0.5 U	< 0.5 U	< 0.5 U
2-Butanone	4900		< 10 U	< 10 U	< 10 U	< 10 U	< 10 U	< 10 U	< 10 U	< 10 U	< 10 U	< 10 U	< 10 U	< 10 U	< 10 U	< 10 U	< 10 U	< 10 U	< 10 U	< 10 U	< 10 U	< 10 U
2-Hexanone	34		< 10 U	< 10 U	< 10 U	< 10 U	< 10 U	< 10 U	< 10 U	< 10 U	< 10 U	< 10 U	< 10 U	< 10 U	< 10 U	< 10 U	< 10 U	< 10 U	< 10 U	< 10 U	< 10 U	< 10 U
4-Methyl-2-pentanone	1000		< 10 U	< 10 U	< 10 U	< 10 U	< 10 U	< 10 U	< 10 U	< 10 U	< 10 U	< 10 U	< 10 U	< 10 U	< 10 U	< 10 U	< 10 U	< 10 U	< 10 U	< 10 U	< 10 U	< 10 U
Acetone	12000		1.2 UB	2.5 UB	1.3 UB	1.3 UB	1.9 UB	1.4 UB	1.8 UB	1.2 UB	1.5 UB	3 UB	1.8 UB	1.8 UB	1.5 UB	1.8 UB	1.1 UB	1.3 UB	3.6 UB	1.8 UB	4.3 UB	9.6 UB
Benzene	0.39	5	< 0.5 U	**0.12 J**	< 0.5 U	**0.23 J**	< 0.5 U	**0.1 J**	< 0.5 U	**0.13 J**	< 0.5 U	**0.1 J**	< 0.5 U	< 0.5 U	< 0.5 U	< 0.5 U	< 0.5 U	< 0.5 U	**0.34 J**	< 0.5 U	< 0.5 U	< 0.5 U
Benzene, 1-methylethyl	390		< 0.5 U	< 0.5 U	< 0.5 U	< 0.5 U	< 0.5 U	< 0.5 U	< 0.5 U	< 0.5 U	< 0.5 U	< 0.5 U	< 0.5 U	< 0.5 U	< 0.5 U	< 0.5 U	< 0.5 U	< 0.5 U	< 0.5 U	< 0.5 U	< 0.5 U	< 0.5 U
Bromodichloromethane	0.12	80	< 0.5 U	< 0.5 U	< 0.5 U	< 0.5 U	< 0.5 U	< 0.5 U	< 0.5 U	< 0.5 U	< 0.5 U	< 0.5 U	< 0.5 U	< 0.5 U	< 0.5 U	< 0.5 U	< 0.5 U	< 0.5 U	< 0.5 U	< 0.5 U	< 0.5 U	< 0.5 U
Bromoform	7.9	80	< 0.5 U	< 0.5 U	< 0.5 U	< 0.5 U	< 0.5 U	< 0.5 U	< 0.5 U	< 0.5 U	< 0.5 U	< 0.5 U	< 0.5 U	< 0.5 U	< 0.5 U	< 0.5 U	< 0.5 U	< 0.5 U	< 0.5 U	< 0.5 U	< 0.5 U	< 0.5 U
Bromomethane	7		< 0.5 U	< 0.5 U	< 0.5 U	< 0.5 U	< 0.5 U	< 0.5 U	< 0.5 U	< 0.5 U	< 0.5 U	< 0.5 U	< 0.5 U	< 0.5 U	< 0.5 U	< 0.5 U	< 0.5 U	< 0.5 U	< 0.5 U	< 0.5 U	< 0.5 U	< 0.5 U
Carbon disulfide	720		< 0.5 U	< 0.5 U	< 0.5 U	< 0.5 U	< 0.5 U	< 0.5 U	**0.11 J**	< 0.5 U	< 0.5 U	< 0.5 U	< 0.5 U	< 0.5 U	< 0.5 U	< 0.5 U	< 0.5 U	< 0.5 U	**0.34 J**	< 0.5 U	< 0.5 U	**0.35 J**
Carbon tetrachloride	0.39	5	< 0.5 U	< 0.5 U	< 0.5 U	< 0.5 U	< 0.5 U	< 0.5 U	< 0.5 U	< 0.5 U	< 0.5 U	< 0.5 U	< 0.5 U	< 0.5 U	< 0.5 U	< 0.5 U	< 0.5 U	< 0.5 U	< 0.5 U	< 0.5 U	< 0.5 U	< 0.5 U
CFC-11	1100		< 0.5 U	< 0.5 U	< 0.5 U	< 0.5 U	< 0.5 U	< 0.5 U	< 0.5 U	< 0.5 U	< 0.5 U	< 0.5 U	< 0.5 U	< 0.5 U	< 0.5 U	< 0.5 U	< 0.5 U	< 0.5 U	< 0.5 U	< 0.5 U	< 0.5 U	< 0.5 U
CFC-12	190		< 0.5 U	< 0.5 U	< 0.5 U	< 0.5 U	< 0.5 U	< 0.5 U	< 0.5 U	< 0.5 U	< 0.5 U	< 0.5 U	< 0.5 U	< 0.5 U	< 0.5 U	< 0.5 U	< 0.5 U	< 0.5 U	< 0.5 U	< 0.5 U	< 0.5 U	< 0.5 U
Chlorobenzene	72	100	< 0.5 U	< 0.5 U	< 0.5 U	< 0.5 U	< 0.5 U	< 0.5 U	< 0.5 U	< 0.5 U	< 0.5 U	< 0.5 U	< 0.5 U	< 0.5 U	< 0.5 U	< 0.5 U	< 0.5 U	< 0.5 U	< 0.5 U	< 0.5 U	< 0.5 U	< 0.5 U
Chloroethane	21000		< 0.5 U	< 0.5 U	< 0.5 U	< 0.5 U	< 0.5 U	< 0.5 U	< 0.5 U	< 0.5 U	< 0.5 U	< 0.5 U	< 0.5 U	< 0.5 U	< 0.5 U	< 0.5 U	< 0.5 U	< 0.5 U	< 0.5 U	< 0.5 U	< 0.5 U	< 0.5 U
Chloroform	0.19	80	< 0.5 U	< 0.5 U	< 0.5 U	< 0.5 U	< 0.5 U	< 0.5 U	< 0.5 U	< 0.5 U	< 0.5 U	< 0.5 U	< 0.5 U	< 0.5 U	< 0.5 U	< 0.5 U	< 0.5 U	< 0.5 U	< 0.5 U	< 0.5 U	< 0.5 U	< 0.5 U
Chloromethane	190		< 0.5 U	< 0.5 U	< 0.5 U	< 0.5 U	< 0.5 U	< 0.5 U	< 0.5 U	< 0.5 U	< 0.5 U	< 0.5 U	< 0.5 U	< 0.5 U	< 0.5 U	< 0.5 U	< 0.5 U	< 0.5 U	< 0.5 U	< 0.5 U	**0.19 J**	< 0.5 U
cis-1,2-Dichloroethene	28	70	**14**	**3.8**	**11**	**4.1**	**2.2**	**10**	**14**	**8.4**	< 0.5 U	**6.1**	**8.3**	**0.16 J**	**0.18 J**	< 0.5 U	< 0.5 U	< 0.5 U	**4.3**	< 0.5 U	**1.6**	< 0.5 U
cis-1,3-Dichloropropene			< 0.5 U	< 0.5 U	< 0.5 U	< 0.5 U	< 0.5 U	< 0.5 U	< 0.5 U	< 0.5 U	< 0.5 U	< 0.5 U	< 0.5 U	< 0.5 U	< 0.5 U	< 0.5 U	< 0.5 U	< 0.5 U	< 0.5 U	< 0.5 U	< 0.5 U	< 0.5 U
Cyclohexane	13000		< 0.5 U	< 0.5 U	< 0.5 U	< 0.5 U	< 0.5 U	< 0.5 U	< 0.5 U	< 0.5 U	< 0.5 U	< 0.5 U	< 0.5 U	< 0.5 U	< 0.5 U	< 0.5 U	< 0.5 U	< 0.5 U	< 0.5 U	< 0.5 U	< 0.5 U	< 0.5 U
Dibromochloromethane	0.15	80	< 0.5 U	< 0.5 U	< 0.5 U	< 0.5 U	< 0.5 U	< 0.5 U	< 0.5 U	< 0.5 U	< 0.5 U	< 0.5 U	< 0.5 U	< 0.5 U	< 0.5 U	< 0.5 U	< 0.5 U	< 0.5 U	< 0.5 U	< 0.5 U	< 0.5 U	< 0.5 U
Ethylbenzene	1.3	700	< 0.5 U	< 0.5 U	< 0.5 U	< 0.5 U	< 0.5 U	< 0.5 U	< 0.5 U	< 0.5 U	< 0.5 U	< 0.5 U	< 0.5 U	< 0.5 U	< 0.5 U	< 0.5 U	< 0.5 U	< 0.5 U	< 0.5 U	< 0.5 U	< 0.5 U	< 0.5 U
Methyl acetate	16000		< 1 U	< 1 U	< 1 U	< 1 U	< 1 U	< 1 U	< 1 U	< 1 U	< 1 U	< 1 U	< 1 U	< 1 U	< 1 U	< 1 U	< 1 U	< 1 U	< 1 U	< 1 U	< 1 U	< 1 U
Methylcyclohexane			< 5 U	< 5 U	< 5 U	< 5 U	< 5 U	< 5 U	< 5 U	< 5 U	< 5 U	< 5 U	< 5 U	< 5 U	< 5 U	< 5 U	< 5 U	< 5 U	< 5 U	< 5 U	< 5 U	< 5 U
Methylene chloride	9.9	5	< 0.5 U	< 0.5 U	< 0.5 U	< 0.5 U	< 0.5 U	< 0.5 U	< 0.5 U	< 0.5 U	< 0.5 U	< 0.5 U	< 0.5 U	< 0.5 U	< 0.5 U	< 0.5 U	< 0.5 U	< 0.5 U	0.24 UB	0.23 UB	0.23 UB	0.26 UB
Styrene	1100	100	< 0.5 U	< 0.5 U	< 0.5 U	< 0.5 U	< 0.5 U	< 0.5 U	< 0.5 U	< 0.5 U	< 0.5 U	< 0.5 U	< 0.5 U	< 0.5 U	< 0.5 U	< 0.5 U	< 0.5 U	< 0.5 U	< 0.5 U	< 0.5 U	< 0.5 U	< 0.5 U
tert-Butyl methyl ether	12		< 0.5 U	< 0.5 U	< 0.5 U	< 0.5 U	< 0.5 U	< 0.5 U	< 0.5 U	< 0.5 U	< 0.5 U	< 0.5 U	< 0.5 U	< 0.5 U	< 0.5 U	< 0.5 U	< 0.5 U	< 0.5 U	< 0.5 U	< 0.5 U	< 0.5 U	< 0.5 U
Tetrachloroethene	9.7	5	< 0.5 U	< 0.5 U	< 0.5 U	**2.6**	< 0.5 U	**0.11 J**	< 0.5 U	< 0.5 U	< 0.5 U	< 0.5 U	< 0.5 U	**0.38 J**	**0.4 J**	< 0.5 U	< 0.5 U	< 0.5 U	**12**	< 0.5 U	< 0.5 U	< 0.5 U
Toluene	860	1000	< 0.5 U	< 0.5 U	< 0.5 U	< 0.5 U	< 0.5 U	< 0.5 U	< 0.5 U	< 0.5 U	< 0.5 U	< 0.5 U	< 0.5 U	< 0.5 U	< 0.5 U	< 0.5 U	< 0.5 U	< 0.5 U	< 0.5 U	< 0.5 U	< 0.5 U	< 0.5 U
trans-1,2-Dichloroethene	86	100	**3.7**	**1.2**	**3.1**	**1.1**	**0.65**	**2.4**	**4.2**	**0.59**	< 0.5 U	**1.7**	**2.3**	< 0.5 U	< 0.5 U	< 0.5 U	< 0.5 U	< 0.5 U	**0.38 J**	< 0.5 U	**0.31 J**	< 0.5 U
trans-1,3-Dichloropropene			< 0.5 U	< 0.5 U	< 0.5 U	< 0.5 U	< 0.5 U	< 0.5 U	< 0.5 U	< 0.5 U	< 0.5 U	< 0.5 U	< 0.5 U	< 0.5 U	< 0.5 U	< 0.5 U	< 0.5 U	< 0.5 U	< 0.5 U	< 0.5 U	< 0.5 U	< 0.5 U
Trichloroethene	0.44	5	**6**	**1.4**	**5**	**23**	**6.8**	**5.3**	**6.5**	**0.28 J**	< 0.5 U	**1.5**	**5.6**	**1.9**	**2**	< 0.5 U	< 0.5 U	< 0.5 U	**47**	**0.15 J**	**5.3**	< 0.5 U
Vinyl chloride	0.015	2	< 0.5 U	< 0.5 U	< 0.5 U	< 0.5 U	< 0.5 U	< 0.5 U	< 0.5 U	**0.23 J**	< 0.5 U	< 0.5 U	< 0.5 U	< 0.5 U	< 0.5 U	< 0.5 U	< 0.5 U	< 0.5 U	< 0.5 U	< 0.5 U	< 0.5 U	< 0.5 U
Xylenes (total)	190	10000	< 0.5 U	< 0.5 U	< 0.5 U	< 0.5 U	< 0.5 U	< 0.5 U	< 0.5 U	< 0.5 U	< 0.5 U	< 0.5 U	< 0.5 U	< 0.5 U	< 0.5 U	< 0.5 U	< 0.5 U	< 0.5 U	< 0.5 U	< 0.5 U	< 0.5 U	< 0.5 U
SVOCs - USEPA Method SW8270 (µg/L)																						
1,1'-Biphenyl	0.83		NA	NA	NA	NA	NA	NA	NA	NA	NA	NA	NA	NA	NA	NA	NA	NA	< 1 U	< 1 U	< 1 U	< 1 U
2,4,5-Trichlorophenol	890		NA	NA	NA	NA	NA	NA	NA	NA	NA	NA	NA	NA	NA	NA	NA	NA	< 1 U	< 1 U	< 1 U	< 1 U
2,4,6-Trichlorophenol	3.5		NA	NA	NA	NA	NA	NA	NA	NA	NA	NA	NA	NA	NA	NA	NA	NA	< 1 U	< 1 U	< 1 U	< 1 U
2,4-Dichlorophenol	35		NA	NA	NA	NA	NA	NA	NA	NA	NA	NA	NA	NA	NA	NA	NA	NA	< 1 U	< 1 U	< 1 U	< 1 U
2,4-Dimethylphenol	270		NA	NA	NA	NA	NA	NA	NA	NA	NA	NA	NA	NA	NA	NA	NA	NA	< 1 U	< 1 U	< 1 U	< 1 U
2,4-Dinitrophenol	30		NA	NA	NA	NA	NA	NA	NA	NA	NA	NA	NA	NA	NA	NA	NA	NA	< 5.1 U	< 5.1 U	< 5.1 U	< 5.1 U
2,4-Dinitrotoluene	0.2		NA	NA	NA	NA	NA	NA	NA	NA	NA	NA	NA	NA	NA	NA	NA	NA	< 2 U	< 2 U	< 2 U	< 2 U
2,6-Dinitrotoluene	15		NA	NA	NA	NA	NA	NA	NA	NA	NA	NA	NA	NA	NA	NA	NA	NA	< 2 U	< 2 U	< 2 U	< 2 U
2-Chloronaphthalene	550		NA	NA	NA	NA	NA	NA	NA	NA	NA	NA	NA	NA	NA	NA	NA	NA	< 1 U	< 1 U	< 1 U	< 1 U
2-Chlorophenol	71		NA	NA	NA	NA	NA	NA	NA	NA	NA	NA	NA	NA	NA	NA	NA	NA	< 1 U	< 1 U	< 1 U	< 1 U
2-Methyl-4,6-dinitrophenol	1.2		NA	NA	NA	NA	NA	NA	NA	NA	NA	NA	NA	NA	NA	NA	NA	NA	< 5.1 U	< 5.1 U	< 5.1 U	< 5.1 U
2-Methylnaphthalene	27		NA	NA	NA	NA	NA	NA	NA	NA	NA	NA	NA	NA	NA	NA	NA	NA	< 1 U	< 1 UJ	< 1 U	< 1 U
2-Methylphenol	720		NA	NA	NA	NA	NA	NA	NA	NA	NA	NA	NA	NA	NA	NA	NA	NA	< 1 U	< 1 U	< 1 U	< 1 U
2-Nitrobenzenamine	150		NA	NA	NA	NA	NA	NA	NA	NA	NA	NA	NA	NA	NA	NA	NA	NA	< 2 U	< 2 U	< 2 U	< 2 U
2-Nitrophenol			NA	NA	NA	NA	NA	NA	NA	NA	NA	NA	NA	NA	NA	NA	NA	NA	< 2 U	< 2 U	< 2 U	< 2 U
3,3'-Dichlorobenzidine	0.11		NA	NA	NA	NA	NA	NA	NA	NA	NA	NA	NA	NA	NA	NA	NA	NA	< 5.1 U	< 5.1 U	< 5.1 U	< 5.1 U
3-Nitrobenzenamine			NA	NA	NA	NA	NA	NA	NA	NA	NA	NA	NA	NA	NA	NA	NA	NA	< 2 U	< 2 R	< 2 U	< 2 U
4-Bromophenyl phenyl ether			NA	NA	NA	NA	NA	NA	NA	NA	NA	NA	NA	NA	NA	NA	NA	NA	< 1 U	< 1 U	< 1 U	< 1 U

Footnotes appear on last page

Table 4-3
March through April 2010 Groundwater Analytical Data
SWMU 39
Fort Stewart, Georgia

		Location ID	G4MW006	G4MW010	G4MW011	G4MW016	G4MW017	G4MW018	G4MW019	G4MW020	G4MW023	G4MW024	G4MW025	G4MW027	G4MW027 DUP	G4MW028	G4MW029	G4MW031	G4MW033	G4MW034	G4MW035	G4MW036
		Sample Date	3/12/2010	3/12/2010	3/11/2010	3/10/2010	3/10/2010	3/12/2010	3/10/2010	3/10/2010	3/10/2010	3/10/2010	3/10/2010	3/11/2010	3/11/2010	3/11/2010	3/11/2010	3/10/2010	4/7/2010	4/6/2010	4/6/2010	4/6/2010
Chemical Name	Tap Water RSL[1]	MCL[2]																				
4-Chloro-3-methylphenol	1100		NA	NA	NA	NA	NA	NA	NA	NA	NA	NA	NA	NA	NA	NA	NA	NA	< 1 U	< 1 U	< 1 U	< 1 U
4-Chlorobenzenamine	0.32		NA	NA	NA	NA	NA	NA	NA	NA	NA	NA	NA	NA	NA	NA	NA	NA	< 1 U	< 1 R	< 1 U	< 1 U
4-Chlorophenyl phenyl ether			NA	NA	NA	NA	NA	NA	NA	NA	NA	NA	NA	NA	NA	NA	NA	NA	< 1 U	< 1 U	< 1 U	< 1 U
4-Methylphenol	1400		NA	NA	NA	NA	NA	NA	NA	NA	NA	NA	NA	NA	NA	NA	NA	NA	< 2 U	< 2 U	< 2 U	< 2 U
4-Nitrobenzenamine	3.3		NA	NA	NA	NA	NA	NA	NA	NA	NA	NA	NA	NA	NA	NA	NA	NA	< 2 U	< 2 R	< 2 U	< 2 U
4-Nitrophenol			NA	NA	NA	NA	NA	NA	NA	NA	NA	NA	NA	NA	NA	NA	NA	NA	< 5.1 U	< 5.1 U	< 5.1 U	< 5.1 U
Acenaphthene	400		NA	NA	NA	NA	NA	NA	NA	NA	NA	NA	NA	NA	NA	NA	NA	NA	< 1 U	< 1 U	< 1 U	< 1 U
Acenaphthylene			NA	NA	NA	NA	NA	NA	NA	NA	NA	NA	NA	NA	NA	NA	NA	NA	< 1 U	< 1 U	< 1 U	< 1 U
Acetophenone	1500		NA	NA	NA	NA	NA	NA	NA	NA	NA	NA	NA	NA	NA	NA	NA	NA	< 1 U	< 1 U	< 1 U	< 1 U
Anthracene	1300		NA	NA	NA	NA	NA	NA	NA	NA	NA	NA	NA	NA	NA	NA	NA	NA	< 1 U	< 1 U	< 1 U	< 1 U
Atrazine	0.26	3	NA	NA	NA	NA	NA	NA	NA	NA	NA	NA	NA	NA	NA	NA	NA	NA	< 1 U	< 1 U	< 1 U	< 1 U
Benz(a)anthracene	0.029		NA	NA	NA	NA	NA	NA	NA	NA	NA	NA	NA	NA	NA	NA	NA	NA	< 1 U	< 1 U	< 1 U	< 1 U
Benzaldehyde	1500		NA	NA	NA	NA	NA	NA	NA	NA	NA	NA	NA	NA	NA	NA	NA	NA	< 5.1 U	< 5.1 U	< 5.1 U	< 5.1 U
Benzo(a)pyrene	0.0029	0.2	NA	NA	NA	NA	NA	NA	NA	NA	NA	NA	NA	NA	NA	NA	NA	NA	< 1 U	< 1 UJ	< 1 U	< 1 U
Benzo(b)fluoranthene	0.029		NA	NA	NA	NA	NA	NA	NA	NA	NA	NA	NA	NA	NA	NA	NA	NA	< 1 U	< 1 UJ	< 1 U	< 1 U
Benzo(ghi)perylene			NA	NA	NA	NA	NA	NA	NA	NA	NA	NA	NA	NA	NA	NA	NA	NA	< 1 U	< 1 UJ	< 1 U	< 1 U
Benzo(k)fluoranthene	0.29		NA	NA	NA	NA	NA	NA	NA	NA	NA	NA	NA	NA	NA	NA	NA	NA	< 1 U	< 1 UJ	< 1 U	< 1 U
Bis(2-chloroethoxy)methane	46		NA	NA	NA	NA	NA	NA	NA	NA	NA	NA	NA	NA	NA	NA	NA	NA	< 1 U	< 1 UJ	< 1 U	< 1 U
Bis(2-chloroethyl) ether	0.012		NA	NA	NA	NA	NA	NA	NA	NA	NA	NA	NA	NA	NA	NA	NA	NA	< 1 U	< 1 U	< 1 U	< 1 U
Bis(2-chloroisopropyl) ether	0.31		NA	NA	NA	NA	NA	NA	NA	NA	NA	NA	NA	NA	NA	NA	NA	NA	< 1 U	< 1 U	< 1 U	< 1 U
Bis(2-ethylhexyl)phthalate	4.8	6	NA	NA	NA	NA	NA	NA	NA	NA	NA	NA	NA	NA	NA	NA	NA	NA	< 5.1 U	< 5.1 UJ	< 5.1 U	< 5.1 U
Butyl benzyl phthalate	14		NA	NA	NA	NA	NA	NA	NA	NA	NA	NA	NA	NA	NA	NA	NA	NA	< 5.1 U	< 5.1 U	< 5.1 U	< 5.1 U
Caprolactam	7700		NA	NA	NA	NA	NA	NA	NA	NA	NA	NA	NA	NA	NA	NA	NA	NA	< 5.1 U	< 5.1 U	< 5.1 U	< 5.1 U
Carbazole			NA	NA	NA	NA	NA	NA	NA	NA	NA	NA	NA	NA	NA	NA	NA	NA	< 1 U	< 1 UJ	< 1 U	< 1 U
Chrysene	2.9		NA	NA	NA	NA	NA	NA	NA	NA	NA	NA	NA	NA	NA	NA	NA	NA	< 1 U	< 1 U	< 1 U	< 1 U
Dibenz(a,h)anthracene	0.0029		NA	NA	NA	NA	NA	NA	NA	NA	NA	NA	NA	NA	NA	NA	NA	NA	< 1 U	< 1 UJ	< 1 U	< 1 U
Dibenzofuran	5.8		NA	NA	NA	NA	NA	NA	NA	NA	NA	NA	NA	NA	NA	NA	NA	NA	< 1 U	< 1 U	< 1 U	< 1 U
Diethyl phthalate	11000		NA	NA	NA	NA	NA	NA	NA	NA	NA	NA	NA	NA	NA	NA	NA	NA	< 5.1 U	< 5.1 U	< 5.1 U	< 5.1 U
Dimethyl phthalate			NA	NA	NA	NA	NA	NA	NA	NA	NA	NA	NA	NA	NA	NA	NA	NA	< 5.1 U	< 5.1 U	< 5.1 U	< 5.1 U
Di-n-butyl phthalate	670		NA	NA	NA	NA	NA	NA	NA	NA	NA	NA	NA	NA	NA	NA	NA	NA	< 5.1 U	< 5.1 U	< 5.1 U	< 5.1 U
Di-n-octylphthalate	190		NA	NA	NA	NA	NA	NA	NA	NA	NA	NA	NA	NA	NA	NA	NA	NA	< 5.1 U	< 5.1 UJ	< 5.1 U	< 5.1 U
Fluoranthene	630		NA	NA	NA	NA	NA	NA	NA	NA	NA	NA	NA	NA	NA	NA	NA	NA	< 1 U	< 1 U	< 1 U	< 1 U
Fluorene	220		NA	NA	NA	NA	NA	NA	NA	NA	NA	NA	NA	NA	NA	NA	NA	NA	< 1 U	< 1 U	< 1 U	< 1 U
Hexachlorobenzene	0.042	1	NA	NA	NA	NA	NA	NA	NA	NA	NA	NA	NA	NA	NA	NA	NA	NA	< 1 U	< 1 U	< 1 U	< 1 U
Hexachlorobutadiene	0.26		NA	NA	NA	NA	NA	NA	NA	NA	NA	NA	NA	NA	NA	NA	NA	NA	< 1 U	< 1 U	< 1 U	< 1 U
Hexachlorocyclopentadiene	22	50	NA	NA	NA	NA	NA	NA	NA	NA	NA	NA	NA	NA	NA	NA	NA	NA	< 5.1 U	< 5.1 U	< 5.1 U	< 5.1 U
Hexachloroethane	0.79		NA	NA	NA	NA	NA	NA	NA	NA	NA	NA	NA	NA	NA	NA	NA	NA	< 1 U	< 1 U	< 1 U	< 1 U
Indeno(1,2,3-cd)pyrene	0.029		NA	NA	NA	NA	NA	NA	NA	NA	NA	NA	NA	NA	NA	NA	NA	NA	< 1 U	< 1 UJ	< 1 U	< 1 U
Isophorone	67		NA	NA	NA	NA	NA	NA	NA	NA	NA	NA	NA	NA	NA	NA	NA	NA	< 1 U	< 1 UJ	< 1 U	< 1 U
Naphthalene	0.14		NA	NA	NA	NA	NA	NA	NA	NA	NA	NA	NA	NA	NA	NA	NA	NA	< 1 U	< 1 UJ	< 1 U	< 1 U
Nitrobenzene	0.12		NA	NA	NA	NA	NA	NA	NA	NA	NA	NA	NA	NA	NA	NA	NA	NA	< 1 U	< 1 U	< 1 U	< 1 U
N-Nitroso-di-n-propylamine	0.0093		NA	NA	NA	NA	NA	NA	NA	NA	NA	NA	NA	NA	NA	NA	NA	NA	< 1 U	< 1 UJ	< 1 U	< 1 U
N-Nitrosodiphenylamine	10		NA	NA	NA	NA	NA	NA	NA	NA	NA	NA	NA	NA	NA	NA	NA	NA	< 1 U	< 1 UJ	< 1 U	< 1 U
Pentachlorophenol	0.035	1	NA	NA	NA	NA	NA	NA	NA	NA	NA	NA	NA	NA	NA	NA	NA	NA	< 5.1 U	< 5.1 U	< 5.1 U	< 5.1 U
Phenanthrene			NA	NA	NA	NA	NA	NA	NA	NA	NA	NA	NA	NA	NA	NA	NA	NA	< 1 U	< 1 U	< 1 U	< 1 U
Phenol	4500		NA	NA	NA	NA	NA	NA	NA	NA	NA	NA	NA	NA	NA	NA	NA	NA	< 1 U	< 1 U	< 1 U	< 1 U
Pyrene	87		NA	NA	NA	NA	NA	NA	NA	NA	NA	NA	NA	NA	NA	NA	NA	NA	< 1 U	< 1 U	< 1 U	< 1 U
Total Metals (ug/L)																						
Arsenic	0.000045	0.01	NA	NA	NA	NA	NA	NA	NA	NA	NA	NA	NA	NA	NA	NA	NA	NA	0.0047 UB	0.0049 UB	< 0.01 U	0.0099 UB
Barium	2.9	2	NA	NA	NA	NA	NA	NA	NA	NA	NA	NA	NA	NA	NA	NA	NA	NA	**0.035**	**0.063**	**0.047**	**0.037**
Cadmium	0.0069	0.005	NA	NA	NA	NA	NA	NA	NA	NA	NA	NA	NA	NA	NA	NA	NA	NA	< 0.002 U	< 0.002 U	< 0.002 U	< 0.002 U
Chromium		0.1	NA	NA	NA	NA	NA	NA	NA	NA	NA	NA	NA	NA	NA	NA	NA	NA	< 0.005 U	< 0.005 U	< 0.005 U	**0.0089**
Lead		0.015	NA	NA	NA	NA	NA	NA	NA	NA	NA	NA	NA	NA	NA	NA	NA	NA	**0.0019 J**	**0.0051 J**	**0.004 J**	**0.012**
Selenium	0.078	0.05	NA	NA	NA	NA	NA	NA	NA	NA	NA	NA	NA	NA	NA	NA	NA	NA	< 0.01 U	< 0.01 U	< 0.01 U	< 0.01 U
Silver	0.071		NA	NA	NA	NA	NA	NA	NA	NA	NA	NA	NA	NA	NA	NA	NA	NA	< 0.005 U	0.00078 UB	< 0.005 U	< 0.005 U
Mercury	0.00063	0.002	NA	NA	NA	NA	NA	NA	NA	NA	NA	NA	NA	NA	NA	NA	NA	NA	< 0.0001 U	< 0.0001 U	< 0.0001 U	< 0.0001 U

Notes:

[1] U.S. EPA Regional Screening Level for tap water as of November 2012
[2] U.S. EPA Maximum Contaminant Level as of November 2012
Sample results were screened against the tap water RSL. If no RSL is available, the MCL was used instead.
Exceedences of the screening criteria are shaded gray.
µg/L Micrograms per liter.
J Constituent concentration was estimated.
U Not detected at laboratory detection limit.
NA Not analyzed.
B Constituent was detected in method blank.
R Data was rejected.
DUP Duplicate Sample

Table 4-4
March through September 2010 Vertical Aquifer Profile Groundwater Data
SWMU 39
Fort Stewart, Georgia

		Location ID	F39TW01	F39TW01	F39TW01	F39TW01	F39TW02	F39TW02	F39TW02-DUP	F39TW02	F39TW02	F39TW03	F39TW03	F39TW03	F39TW03
		Depth (ft bgs)	10-15	20-25	30-35	40-45	10-15	20-25	20-25	30-35	40-45	10-15	20-25	30-35	40-45
		Sample Date	3/31/2010	3/30/2010	3/30/2010	3/18/2010	3/30/2010	3/30/2010	3/30/2010	3/30/2010	3/30/2010	3/31/2010	3/31/2010	3/31/2010	3/31/2010
Chemical Name	Tap Water RSL[1]	MCL[2]													
VOCs - USEPA Method SW8260 (µg/L)															
1,1,1-Trichloroethane	7500	200	< 0.5 U	< 0.5 UJ	< 0.5 U	< 0.5 U	< 0.5 U	< 0.5 U	< 0.5 U	< 0.5 U	< 0.5 U	< 0.5 U	< 0.5 U	< 0.5 U	< 0.5 U
1,1,2,2-Tetrachloroethane	0.066		< 0.5 U	< 0.5 UJ	< 0.5 U	< 0.5 U	< 0.5 U	< 0.5 U	< 0.5 U	< 0.5 U	< 0.5 U	< 0.5 U	< 0.5 U	< 0.5 U	< 0.5 U
1,1,2-Trichloro-1,2,2-Trifluoroethane	53000		< 0.5 U	< 0.5 UJ	< 0.5 U	< 0.5 U	< 0.5 U	< 0.5 U	< 0.5 U	< 0.5 U	< 0.5 U	< 0.5 U	< 0.5 U	< 0.5 U	< 0.5 U
1,1,2-Trichloroethane	0.24	5	< 0.5 U	< 0.5 UJ	< 0.5 U	< 0.5 U	< 0.5 U	< 0.5 U	< 0.5 U	< 0.5 U	< 0.5 U	< 0.5 U	< 0.5 U	< 0.5 U	< 0.5 U
1,1-Dichloroethane	2.4		< 0.5 U	< 0.5 UJ	< 0.5 U	< 0.5 U	< 0.5 U	< 0.5 U	< 0.5 U	**1.3**	< 0.5 U	< 0.5 U	**0.82**	**1.4**	< 0.5 U
1,1-Dichloroethene	260	7	**0.15 J**	**0.1 J**	< 0.5 U	< 0.5 U	< 0.5 U	**0.21 J**	< 0.5	**0.83**	< 0.5 U	**0.19 J**	**1.7**	**2.4**	< 0.5 U
1,2,4-Trichlorobenzene	0.99	70	< 0.5 U	< 0.5 UJ	< 0.5 U	< 0.5 U	< 0.5 U	< 0.5 U	< 0.5 U	< 0.5 U	< 0.5 U	< 0.5 U	< 0.5 U	< 0.5 U	< 0.5 U
1,2-Dibromo-3-chloropropane (DBCP)	0.00032	0.2	< 0.5 U	< 0.5 UJ	< 0.5 UJ	< 0.5 U	< 0.5 U	< 0.5 UJ	< 0.5 U	< 0.5 UJ	< 0.5 UJ	< 0.5 U	< 0.5 U	< 0.5 U	< 0.5 U
1,2-Dibromoethane	0.0065	0.05	< 0.5 U	< 0.5 UJ	< 0.5 U	< 0.5 U	< 0.5 U	< 0.5 U	< 0.5 U	< 0.5 U	< 0.5 U	< 0.5 U	< 0.5 U	< 0.5 U	< 0.5 U
1,2-Dichlorobenzene	280	600	< 0.5 U	< 0.5 UJ	< 0.5 U	< 0.5 U	< 0.5 U	< 0.5 U	< 0.5 U	< 0.5 U	< 0.5 U	< 0.5 U	< 0.5 U	< 0.5 U	< 0.5 U
1,2-Dichloroethane	0.15	5	< 0.5 U	< 0.5 UJ	< 0.5 U	< 0.5 U	< 0.5 U	< 0.5 U	< 0.5 U	< 0.5 U	< 0.5 U	< 0.5 U	< 0.5 U	< 0.5 U	< 0.5 U
1,2-Dichloropropane	0.38	5	< 0.5 U	< 0.5 UJ	< 0.5 U	< 0.5 U	< 0.5 U	< 0.5 U	< 0.5 U	< 0.5 U	< 0.5 U	< 0.5 U	< 0.5 U	< 0.5 U	< 0.5 U
1,3-Dichlorobenzene			< 0.5 U	< 0.5 UJ	< 0.5 U	< 0.5 U	< 0.5 U	< 0.5 U	< 0.5 U	< 0.5 U	< 0.5 U	< 0.5 U	< 0.5 U	< 0.5 U	< 0.5 U
1,4-Dichlorobenzene	0.42	75	< 0.5 U	< 0.5 UJ	< 0.5 U	< 0.5 U	< 0.5 U	< 0.5 U	< 0.5 U	< 0.5 U	< 0.5 U	< 0.5 U	< 0.5 U	< 0.5 U	< 0.5 U
2-Butanone	4900		< 10 U	< 10 UJ	< 10 U	< 10 U	< 10 U	< 10 U	< 10 U	< 10 U	< 10 U	< 10 U	< 10 U	< 10 U	< 10 U
2-Hexanone	34		< 10 U	< 10 UJ	**0.33 J**	< 10 U	< 10 U	< 10 U	< 10 U	< 10 U	< 10 U	< 10 U	< 10 U	< 10 U	< 10 U
4-Methyl-2-pentanone	1000		< 10 U	< 10 UJ	< 10 U	< 10 U	< 10 U	< 10 U	< 10 U	< 10 U	< 10 U	< 10 U	< 10 U	< 10 U	< 10 U
Acetone	12000		4.6 UB	**2.9 J**	**27**	6.9 UB	**8.8 J**	**6.3 J**	**4.5 J**	**12**	**6.3 J**	5 UB	3.4 UB	2.4 UB	5.2 UB
Benzene	0.39	5	**0.23 J**	**0.53 J**	**0.17 J**	< 0.5 U	< 0.5 U	< 0.5 U	< 0.5 U	**0.59**	< 0.5 U	< 0.5 U	< 0.5 U	**2.2**	< 0.5 U
Benzene, 1-methylethyl	390		< 0.5 U	< 0.5 UJ	< 0.5 U	< 0.5 U	< 0.5 U	< 0.5 U	< 0.5 U	< 0.5 U	< 0.5 U	< 0.5 U	< 0.5 U	< 0.5 U	< 0.5 U
Bromodichloromethane	0.12	80	< 0.5 U	< 0.5 UJ	< 0.5 U	< 0.5 U	< 0.5 U	< 0.5 U	< 0.5 U	< 0.5 U	< 0.5 U	< 0.5 U	< 0.5 U	< 0.5 U	< 0.5 U
Bromoform	7.9	80	< 0.5 U	< 0.5 UJ	< 0.5 U	< 0.5 U	< 0.5 U	< 0.5 U	< 0.5 U	< 0.5 U	< 0.5 U	< 0.5 U	< 0.5 U	< 0.5 U	< 0.5 U
Bromomethane	7		< 0.5 UJ	< 0.5 UJ	< 0.5 U	< 0.5 U	< 0.5 UJ	< 0.5 U	< 0.5 UJ	< 0.5 U	< 0.5 U	< 0.5 UJ	< 0.5 U	< 0.5 U	< 0.5 UJ
Carbon disulfide	720		< 0.5 U	**0.23 J**	**0.56**	0.27 UB	**0.24 J**	**0.33 J**	**0.41 J**	**0.33 J**	**0.45 J**	< 0.5 U	0.14 UB	< 0.5 U	< 0.5 U
Carbon tetrachloride	0.39	5	< 0.5 U	< 0.5 UJ	< 0.5 U	< 0.5 U	< 0.5 U	< 0.5 U	< 0.5 U	< 0.5 U	< 0.5 U	< 0.5 U	< 0.5 U	< 0.5 U	< 0.5 U
CFC-11	1100		< 0.5 U	< 0.5 UJ	< 0.5 U	< 0.5 UJ	< 0.5 U	< 0.5 U	< 0.5 U	< 0.5 U	< 0.5 U	< 0.5 U	< 0.5 U	< 0.5 U	< 0.5 U
CFC-12	190		< 0.5 U	< 0.5 UJ	< 0.5 U	< 0.5 U	< 0.5 U	< 0.5 U	< 0.5 U	< 0.5 U	< 0.5 U	< 0.5 U	< 0.5 U	< 0.5 U	< 0.5 U
Chlorobenzene	72	100	< 0.5 U	< 0.5 UJ	< 0.5 U	< 0.5 U	< 0.5 U	< 0.5 U	< 0.5 U	< 0.5 U	< 0.5 U	< 0.5 U	< 0.5 U	< 0.5 U	< 0.5 U
Chloroethane	21000		< 0.5 U	< 0.5	< 0.5 U	< 0.5 U	< 0.5 U	< 0.5 U	< 0.5 U	< 0.5 U	< 0.5 U	< 0.5 U	< 0.5 U	< 0.5 U	< 0.5 U
Chloroform	0.19	80	< 0.5 U	< 0.5 UJ	< 0.5 U	< 0.5 U	< 0.5 U	< 0.5 U	< 0.5 U	< 0.5 U	< 0.5 U	< 0.5 U	< 0.5 U	< 0.5 U	< 0.5 U
Chloromethane	190		< 0.5 U	< 0.5 U	< 0.5 U	< 0.5 U	< 0.5 U	< 0.5 U	< 0.5 U	< 0.5 U	< 0.5 U	< 0.5 U	< 0.5 U	< 0.5 U	< 0.5 U
cis-1,2-Dichloroethene	28	70	**6.2**	**4.4 J**	**0.29 J**	< 0.5 U	< 0.5 U	**16**	**16**	**11**	< 0.5 U	**0.28 J**	**3.9**	**10**	< 0.5 U
cis-1,3-Dichloropropene			< 0.5 U	< 0.5 UJ	< 0.5 U	< 0.5 U	< 0.5 U	< 0.5 U	< 0.5 U	< 0.5 U	< 0.5 U	< 0.5 U	< 0.5 U	< 0.5 U	< 0.5 U
Cyclohexane	13000		< 0.5 U	< 0.5 UJ	< 0.5 U	< 0.5 U	< 0.5 U	< 0.5 U	< 0.5 U	< 0.5 U	< 0.5 U	< 0.5 U	< 0.5 U	< 0.5 U	< 0.5 U
Dibromochloromethane	0.15	80	< 0.5 U	< 0.5 UJ	< 0.5 U	< 0.5 U	< 0.5 U	< 0.5 U	< 0.5 U	< 0.5 U	< 0.5 U	< 0.5 U	< 0.5 U	< 0.5 U	< 0.5 U
Ethylbenzene	1.3	700	< 0.5 U	< 0.5 UJ	< 0.5 U	< 0.5 U	< 0.5 U	< 0.5 U	< 0.5 U	< 0.5 U	< 0.5 U	< 0.5 U	< 0.5 U	< 0.5 U	< 0.5 U
Methyl acetate	16000		< 1 U	< 1 UJ	< 1 U	< 1 U	< 1 U	< 1 U	< 1 U	< 1 U	< 1 U	< 1 U	< 1 U	< 1 U	< 1 U
Methylcyclohexane			< 5 U	< 5 UJ	< 5 U	< 5 U	< 5 U	< 5 U	< 5 U	< 5 U	< 5 U	< 5 U	< 5 U	< 5 U	< 5 U
Methylene chloride	9.9	5	0.18 UB	< 0.5 UJ	< 0.5 U	< 0.5 U	0.2 UB	< 0.5 U	0.21 UB	< 0.5 U	< 0.5 U	0.18 UB	0.17 UB	0.2 UB	0.2 UB
Styrene	1100	100	< 0.5 U	< 0.5 UJ	< 0.5 U	< 0.5 U	< 0.5 U	< 0.5 U	< 0.5 U	< 0.5 U	< 0.5 U	< 0.5 U	< 0.5 U	< 0.5 U	< 0.5 U
tert-Butyl methyl ether	12		< 0.5 U	< 0.5 UJ	< 0.5 U	< 0.5 U	< 0.5 U	< 0.5 U	< 0.5 U	< 0.5 U	< 0.5 U	< 0.5 U	< 0.5 U	< 0.5 U	< 0.5 U
Tetrachloroethene	9.7	5	**7.1**	**40 J**	< 0.5 U	< 0.5 U	< 0.5 U	< 0.5 U	< 0.5 U	< 0.5 U	< 0.5 U	< 0.5 U	< 0.5 U	**0.32 J**	< 0.5 U
Toluene	860	1000	< 0.5 U	< 0.5 UJ	**0.23 J**	**0.17 J**	< 0.5 U	< 0.5 U	< 0.5 U	**0.18 J**	< 0.5 U	< 0.5 U	< 0.5 U	< 0.5 U	< 0.5 U
trans-1,2-Dichloroethene	86	100	**1.2**	**0.33 J**	< 0.5 U	< 0.5 U	< 0.5 U	**4.6**	**4.4**	**0.99**	< 0.5 U	< 0.5 U	**0.28 J**	**0.62**	< 0.5 U
trans-1,3-Dichloropropene			< 0.5 U	< 0.5 UJ	< 0.5 U	< 0.5 U	< 0.5 U	< 0.5 U	< 0.5 U	< 0.5 U	< 0.5 U	< 0.5 U	< 0.5 U	< 0.5 U	< 0.5 U
Trichloroethene	0.44	5	**43**	**40 J**	**0.2 J**	< 0.5 U	< 0.5 U	**30**	**28**	**12**	< 0.5 U	**0.37 J**	**4.1**	**20**	< 0.5 U
Vinyl chloride	0.015	2	< 0.5 U	< 0.5 UJ	< 0.5 U	< 0.5 U	< 0.5 U	< 0.5 U	< 0.5 U	< 0.5 U	< 0.5 U	< 0.5 U	< 0.5 U	< 0.5 U	< 0.5 U
Xylenes (total)	190	10000	< 0.5 U	< 0.5 UJ	< 0.5 U	< 0.5 U	< 0.5 U	< 0.5 U	< 0.5 U	< 0.5 U	< 0.5 U	< 0.5 U	< 0.5 U	< 0.5 U	< 0.5 U
SVOCs - USEPA Method SW8270 (µg/L)															
1,1'-Biphenyl	0.83		< 1 U	< 1.1 U	< 1.1 U	< 1 U	< 1 U	< 1.1 U	< 1 U	< 1 U	< 1 U	< 1 U	< 1.1 U	< 1.1 U	< 1 R
2,4,5-Trichlorophenol	890		< 1 U	< 1.1 U	< 1.1 U	< 1 U	< 1 U	< 1.1 U	< 1 U	< 1 U	< 1 U	< 1 U	< 1.1 U	< 1.1 U	< 1.1 U
2,4,6-Trichlorophenol	3.5		< 1 U	< 1.1 U	< 1.1 U	< 1 U	< 1 U	< 1.1 U	< 1 U	< 1 U	< 1 U	< 1 U	< 1.1 U	< 1.1 U	< 1.1 U
2,4-Dichlorophenol	35		< 1 U	< 1.1 U	< 1.1 U	< 1 U	< 1 U	< 1.1 U	< 1 U	< 1 U	< 1 U	< 1 U	< 1.1 U	< 1.1 U	< 1.1 U
2,4-Dimethylphenol	270		< 1 U	< 1.1 U	< 1.1 U	< 1 U	< 1 U	< 1.1 U	< 1 U	< 1 U	< 1 U	< 1 U	< 1.1 U	< 1.1 U	< 1.1 U
2,4-Dinitrophenol	30		< 5.2 U	< 5.4 U	< 5.3 U	< 5.2 U	< 5.1 U	< 5.3 U	< 5.1 U	< 5.1 U	< 5.2 U	< 5.1 U	< 5.3 U	< 5.3 U	< 5.4 U
2,4-Dinitrotoluene	0.2		< 2.1 U	< 2.2 U	< 2.1 U	< 2.1 U	< 2 U	< 2.1 U	< 2 U	< 2 U	< 2.1 U	< 2 U	< 2.1 U	< 2.1 U	< 2.1 R
2,6-Dinitrotoluene	15		< 2.1 U	< 2.2 U	< 2.1 U	< 2.1 U	< 2 U	< 2.1 U	< 2 U	< 2 U	< 2.1 U	< 2 U	< 2.1 U	< 2.1 U	< 2.1 R
2-Chloronaphthalene	550		< 1 U	< 1.1 U	< 1.1 U	< 1 U	< 1 U	< 1.1 U	< 1 U	< 1 U	< 1 U	< 1 U	< 1.1 U	< 1.1 U	< 1 R
2-Chlorophenol	71		< 1 U	< 1.1 U	< 1.1 U	< 1 U	< 1 U	< 1.1 U	< 1 U	< 1 U	< 1 U	< 1 U	< 1.1 U	< 1.1 U	< 1.1 U
2-Methyl-4,6-dinitrophenol	1.2		< 5.2 U	< 5.4 U	< 5.3 U	< 5.2 U	< 5.1 U	< 5.3 U	< 5.1 U	< 5.1 U	< 5.2 U	< 5.1 U	< 5.3 U	< 5.3 U	< 5.4 U
2-Methylnaphthalene	27		< 1 U	< 1.1 U	< 1.1 U	< 1 U	< 1 U	< 1.1 U	< 1 U	< 1 U	< 1 U	< 1 U	< 1.1 U	< 1.1 U	< 1 R
2-Methylphenol	720		< 1 U	< 1.1 U	< 1.1 U	< 1 U	< 1 U	< 1.1 U	< 1 U	< 1 U	< 1 U	< 1 U	< 1.1 U	< 1.1 U	< 1.1 U
2-Nitrobenzenamine	150		< 2.1 U	< 2.2 U	< 2.1 U	< 2.1 U	< 2 U	< 2.1 U	< 2 U	< 2 U	< 2.1 U	< 2 U	< 2.1 U	< 2.1 U	< 2.1 R
2-Nitrophenol			< 2.1 U	< 2.2 U	< 2.1 U	< 2.1 U	< 2 U	< 2.1 U	< 2 U	< 2 U	< 2.1 U	< 2 U	< 2.1 U	< 2.1 U	< 2.2 U
3,3'-Dichlorobenzidine	0.11		< 5.2 U	< 5.4 U	< 5.3 U	< 5.2 U	< 5.1 U	< 5.3 U	< 5.1 U	< 5.1 U	< 5.2 U	< 5.1 U	< 5.3 U	< 5.3 U	< 5.2 R
3-Nitrobenzenamine			< 2.1 U	< 2.2 U	< 2.1 U	< 2.1 U	< 2 U	< 2.1 U	< 2 U	< 2 U	< 2.1 U	< 2 U	< 2.1 U	< 2.1 U	< 2.1 R
4-Bromophenyl phenyl ether			< 1 U	< 1.1 U	< 1.1 U	< 1 U	< 1 U	< 1.1 U	< 1 U	< 1 U	< 1 U	< 1 U	< 1.1 U	< 1.1 U	< 1 R
4-Chloro-3-methylphenol	1100		< 1 U	< 1.1 U	< 1.1 U	< 1 U	< 1 U	< 1.1 U	< 1 U	< 1 U	< 1 U	< 1 U	< 1.1 U	< 1.1 U	< 1.1 U
4-Chlorobenzenamine	0.32		< 1 U	< 1.1 U	< 1.1 U	< 1 UJ	< 1 U	< 1.1 U	< 1 U	< 1 U	< 1 U	< 1 U	< 1.1 U	< 1.1 U	< 1 R
4-Chlorophenyl phenyl ether			< 1 U	< 1.1 U	< 1.1 U	< 1 U	< 1 U	< 1.1 U	< 1 U	< 1 U	< 1 U	< 1 U	< 1.1 U	< 1.1 U	< 1 R
4-Methylphenol	1400		< 2.1 U	< 2.2 U	< 2.1 U	< 2.1 U	< 2 U	< 2.1 U	< 2 U	< 2 U	< 2.1 U	< 2 U	< 2.1 U	< 2.1 U	< 2.2 U
4-Nitrobenzenamine	3.3		< 2.1 U	< 2.2 U	< 2.1 U	< 2.1 U	< 2 U	< 2.1 U	< 2 U	< 2 U	< 2.1 U	< 2 U	< 2.1 U	< 2.1 U	< 2.1 R

Footnotes appear on last page

Table 4-4
March through September 2010 Vertical Aquifer Profile Groundwater Data
SWMU 39
Fort Stewart, Georgia

		Location ID	F39TW01	F39TW01	F39TW01	F39TW01	F39TW02	F39TW02	F39TW02-DUP	F39TW02	F39TW02	F39TW03	F39TW03	F39TW03	F39TW03
		Depth (ft bgs)	10-15	20-25	30-35	40-45	10-15	20-25	20-25	30-35	40-45	10-15	20-25	30-35	40-45
		Sample Date	3/31/2010	3/30/2010	3/30/2010	3/18/2010	3/30/2010	3/30/2010	3/30/2010	3/30/2010	3/30/2010	3/31/2010	3/31/2010	3/31/2010	3/31/2010
Chemical Name	Tap Water RSL[1]	MCL[2]													
SVOCs continued - USEPA Method SW8270 (µg/L)															
4-Nitrophenol			< 5.2 U	< 5.4 U	< 5.3 U	< 5.2 U	< 5.1 U	< 5.3 U	< 5.1 U	< 5.1 U	< 5.2 U	< 5.1 U	< 5.3 U	< 5.3 U	< 5.4 U
Acenaphthene	400		< 1 U	< 1.1 U	< 1.1 U	< 1 U	< 1 U	< 1.1 U	< 1 U	< 1 U	< 1 U	< 1 U	< 1.1 U	< 1.1 U	< 1 R
Acenaphthylene			< 1 U	< 1.1 U	< 1.1 U	< 1 U	< 1 U	< 1.1 U	< 1 U	< 1 U	< 1 U	< 1 U	< 1.1 U	< 1.1 U	< 1 R
Acetophenone	1500		< 1 U	< 1.1 U	< 1.1 U	< 1 U	< 1 U	< 1.1 U	< 1 U	< 1 U	< 1 U	< 1 U	< 1.1 U	< 1.1 U	< 1 R
Anthracene	1300		< 1 U	< 1.1 U	< 1.1 U	< 1 U	< 1 U	< 1.1 U	< 1 U	< 1 U	< 1 U	< 1 U	< 1.1 U	< 1.1 U	< 1 R
Atrazine	0.26	3	< 1 U	< 1.1 U	< 1.1 U	< 1 U	< 1 U	< 1.1 U	< 1 U	< 1 U	< 1 U	< 1 U	< 1.1 U	< 1.1 U	< 1 R
Benz(a)anthracene	0.029		< 1 U	< 1.1 UJ	< 1.1 U	< 1 U	< 1 U	< 1.1 U	< 1 U	< 1 U	< 1 U	< 1 U	< 1.1 U	< 1.1 U	< 1 R
Benzaldehyde	1500		< 5.2 U	< 5.4 U	< 5.3 U	< 5.2 U	< 5.1 U	< 5.3 U	< 5.1 U	< 5.1 U	< 5.2 U	< 5.1 U	< 5.3 U	< 5.3 U	< 5.2 R
Benzo(a)pyrene	0.0029	0.2	< 1 U	< 1.1 U	< 1.1 U	< 1 U	< 1 U	< 1.1 U	< 1 U	< 1 U	< 1 U	< 1 U	< 1.1 U	< 1.1 U	< 1 R
Benzo(b)fluoranthene	0.029		< 1 U	< 1.1 U	< 1.1 U	< 1 U	< 1 U	< 1.1 U	< 1 U	< 1 U	< 1 U	< 1 U	< 1.1 U	< 1.1 U	< 1 R
Benzo(ghi)perylene			< 1 U	< 1.1 R	< 1.1 U	< 1 U	< 1 U	< 1.1 U	< 1 U	< 1 U	< 1 U	< 1 U	< 1.1 U	< 1.1 U	< 1 R
Benzo(k)fluoranthene	0.29		< 1 U	< 1.1 U	< 1.1 U	< 1 U	< 1 U	< 1.1 U	< 1 U	< 1 U	< 1 U	< 1 U	< 1.1 U	< 1.1 U	< 1 R
Bis(2-chloroethoxy)methane	46		< 1 U	< 1.1 U	< 1.1 U	< 1 U	< 1 U	< 1.1 U	< 1 U	< 1 U	< 1 U	< 1 U	< 1.1 U	< 1.1 U	< 1 R
Bis(2-chloroethyl) ether	0.012		< 1 U	< 1.1 U	< 1.1 U	< 1 U	< 1 U	< 1.1 U	< 1 U	< 1 U	< 1 U	< 1 U	< 1.1 U	< 1.1 U	< 1 R
Bis(2-chloroisopropyl) ether	0.31		< 1 U	< 1.1 U	< 1.1 U	< 1 U	< 1 U	< 1.1 U	< 1 U	< 1 U	< 1 U	< 1 U	< 1.1 U	< 1.1 U	< 1 R
Bis(2-ethylhexyl)phthalate	4.8	6	< 5.2 U	< 5.4 U	< 5.3 U	< 5.2 U	< 5.1 U	< 5.3 U	< 5.1 U	< 5.1 U	< 5.2 U	< 5.1 U	< 5.3 U	< 5.3 U	< 5.2 R
Butyl benzyl phthalate	14		< 5.2 U	< 5.4 U	**2.2 J**	< 5.2 U	< 5.1 U	< 5.3 U	< 5.1 U	< 5.1 U	< 5.2 U	< 5.1 U	< 5.3 U	< 5.3 U	< 5.2 R
Caprolactam	7700		< 5.2 U	< 5.4 U	< 5.3 U	< 5.2 U	< 5.1 U	< 5.3 U	**2.1 J**	< 5.1 U	< 5.2 U	< 5.1 U	< 5.3 U	< 5.3 U	< 5.2 R
Carbazole			< 1 U	< 1.1 U	< 1.1 U	< 1 U	< 1 U	< 1.1 U	< 1 U	< 1 U	< 1 U	< 1 U	< 1.1 U	< 1.1 U	< 1 R
Chrysene	2.9		< 1 U	< 1.1 UJ	< 1.1 U	< 1 U	< 1 U	< 1.1 U	< 1 U	< 1 U	< 1 U	< 1 U	< 1.1 U	< 1.1 U	< 1 R
Dibenz(a,h)anthracene	0.0029		< 1 U	< 1.1 UJ	< 1.1 U	< 1 U	< 1 U	< 1.1 U	< 1 U	< 1 U	< 1 U	< 1 U	< 1.1 U	< 1.1 U	< 1 R
Dibenzofuran	5.8		< 1 U	< 1.1 U	< 1.1 U	< 1 U	< 1 U	< 1.1 U	< 1 U	< 1 U	< 1 U	< 1 U	< 1.1 U	< 1.1 U	< 1 R
Diethyl phthalate	11000		< 5.2 U	< 5.4 U	**2.3 J**	< 5.2 U	**2.4 J**	< 5.3 U	< 5.1 U	< 5.1 U	< 5.2 U	< 5.1 U	< 5.3 U	< 5.3 U	< 5.2 R
Dimethyl phthalate			< 5.2 U	< 5.4 U	< 5.3 U	< 5.2 U	< 5.1 U	< 5.3 U	< 5.1 U	< 5.1 U	< 5.2 U	< 5.1 U	< 5.3 U	< 5.3 U	< 5.2 R
Di-n-butyl phthalate	670		< 5.2 U	< 5.4 U	< 5.3 U	< 5.2 U	< 5.1 U	< 5.3 U	< 5.1 U	< 5.1 U	< 5.2 U	< 5.1 U	< 5.3 U	< 5.3 U	< 5.2 R
Di-n-octylphthalate	190		< 5.2 U	< 5.4 UJ	< 5.3 U	< 5.2 U	< 5.1 U	< 5.3 U	< 5.1 U	< 5.1 U	< 5.2 U	< 5.1 U	< 5.3 U	< 5.3 U	< 5.2 R
Fluoranthene	630		< 1 U	< 1.1 U	< 1.1 U	< 1 U	< 1 U	< 1.1 U	< 1 U	< 1 U	< 1 U	< 1 U	< 1.1 U	< 1.1 U	< 1 R
Fluorene	220		< 1 U	< 1.1 U	< 1.1 U	< 1 U	< 1 U	< 1.1 U	< 1 U	< 1 U	< 1 U	< 1 U	< 1.1 U	< 1.1 U	< 1 R
Hexachlorobenzene	0.042	1	< 1 U	< 1.1 U	< 1.1 U	< 1 U	< 1 U	< 1.1 U	< 1 U	< 1 U	< 1 U	< 1 U	< 1.1 U	< 1.1 U	< 1 R
Hexachlorobutadiene	0.26		< 1 U	< 1.1 U	< 1.1 U	< 1 U	< 1 U	< 1.1 U	< 1 U	< 1 U	< 1 U	< 1 U	< 1.1 U	< 1.1 U	< 1 R
Hexachlorocyclopentadiene	22	50	< 5.2 U	< 5.4 U	< 5.3 U	< 5.2 U	< 5.1 U	< 5.3 U	< 5.1 U	< 5.1 U	< 5.2 U	< 5.1 U	< 5.3 U	< 5.3 U	< 5.2 R
Hexachloroethane	0.79		< 1 U	< 1.1 U	< 1.1 U	< 1 U	< 1 U	< 1.1 U	< 1 U	< 1 U	< 1 U	< 1 U	< 1.1 U	< 1.1 U	< 1 R
Indeno(1,2,3-cd)pyrene	0.029		< 1 U	< 1.1 UJ	< 1.1 U	< 1 U	< 1 U	< 1.1 U	< 1 U	< 1 U	< 1 U	< 1 U	< 1.1 U	< 1.1 U	< 1 R
Isophorone	67		< 1 U	< 1.1 U	< 1.1 U	< 1 U	< 1 U	< 1.1 U	< 1 U	< 1 U	< 1 U	< 1 U	< 1.1 U	< 1.1 U	< 1 R
Naphthalene	0.14		< 1 U	< 1.1 U	< 1.1 U	< 1 U	< 1 U	< 1.1 U	< 1 U	< 1 U	< 1 U	< 1 U	< 1.1 U	< 1.1 U	< 1 R
Nitrobenzene	0.12		< 1 U	< 1.1 U	< 1.1 U	< 1 U	< 1 U	< 1.1 U	< 1 U	< 1 U	< 1 U	< 1 U	< 1.1 U	< 1.1 U	< 1 R
N-Nitroso-di-n-propylamine	0.0093		< 1 U	< 1.1 U	< 1.1 U	< 1 U	< 1 U	< 1.1 U	< 1 U	< 1 U	< 1 U	< 1 U	< 1.1 U	< 1.1 U	< 1 R
N-Nitrosodiphenylamine	10		< 1 U	< 1.1 U	< 1.1 U	< 1 U	< 1 U	< 1.1 U	< 1 U	< 1 U	< 1 U	< 1 U	< 1.1 U	< 1.1 U	< 1 R
Pentachlorophenol	0.035	1	< 5.2 U	< 5.4 U	< 5.3 U	< 5.2 U	< 5.1 U	< 5.3 U	< 5.1 U	< 5.1 U	< 5.2 U	< 5.1 U	< 5.3 U	< 5.3 U	< 5.4 U
Phenanthrene			< 1 U	< 1.1 U	< 1.1 U	< 1 U	< 1 U	< 1.1 U	< 1 U	< 1 U	< 1 U	< 1 U	< 1.1 U	< 1.1 U	< 1 R
Phenol	4500		< 1 U	< 1.1 U	< 1.1 U	< 1 U	< 1 U	< 1.1 U	< 1 U	< 1 U	< 1 U	< 1 U	< 1.1 U	< 1.1 U	< 1.1 U
Pyrene	87		< 1 U	< 1.1 U	< 1.1 U	< 1 U	< 1 U	< 1.1 U	< 1 U	< 1 U	< 1 U	< 1 U	< 1.1 U	< 1.1 U	< 1 R

Footnotes appear on last page

Table 4-4
March through September 2010 Vertical Aquifer Profile Groundwater Data
SWMU 39
Fort Stewart, Georgia

		Location ID	F39TW04	F39TW04	F39TW04	F39TW04	F39TW05	F39TW05	F39TW05	F39TW05	F39TW06	F39TW06	F39TW06	F39TW06-DUP	F39TW06	F39TW07	F39TW07	F39TW07	F39TW07
		Depth (ft bgs)	10-15	20-25	30-35	40-45	10-15	20-25	30-35	40-45	10-15	20-25	30-35	30-35	40-45	10-15	20-25	30-35	40-45
		Sample Date	4/1/2010	4/1/2010	4/1/2010	4/1/2010	4/5/2010	4/6/2010	4/6/2010	4/5/2010	4/6/2010	4/7/2010	4/7/2010	4/7/2010	4/6/2010	4/7/2010	4/8/2010	4/8/2010	4/7/2010
Chemical Name	Tap Water RSL[1]	MCL[2]																	
VOCs - USEPA Method SW8260 (µg/L)																			
1,1,1-Trichloroethane	7500	200	< 0.5 U	< 0.5 U	< 0.5 U	< 0.5 U	< 0.5 U	< 0.5 U	< 0.5 U	< 0.5 U	< 0.5 U	< 0.5 U	< 0.5 U	< 0.5 U	< 1 U	< 0.5 U	< 0.5 U	< 0.5 U	< 0.5 U
1,1,2,2-Tetrachloroethane	0.066		< 0.5 U	< 0.5 U	< 0.5 U	< 0.5 U	< 0.5 U	< 0.5 U	< 0.5 U	< 0.5 U	< 0.5 U	< 0.5 U	< 0.5 U	< 0.5 U	< 1 U	< 0.5 U	< 0.5 U	< 0.5 U	< 0.5 U
1,1,2-Trichloro-1,2,2-Trifluoroethane	53000		< 0.5 U	< 0.5 U	< 0.5 U	< 0.5 U	< 0.5 U	< 0.5 U	< 0.5 U	< 0.5 U	< 0.5 U	< 0.5 U	< 0.5 U	< 0.5 U	< 1 U	< 0.5 U	< 0.5 U	< 0.5 U	< 0.5 U
1,1,2-Trichloroethane	0.24	5	< 0.5 U	< 0.5 U	< 0.5 U	< 0.5 U	< 0.5 U	< 0.5 U	< 0.5 U	< 0.5 U	< 0.5 U	< 0.5 U	< 0.5 U	< 0.5 U	< 1 U	< 0.5 U	< 0.5 U	< 0.5 U	< 0.5 U
1,1-Dichloroethane	2.4		< 0.5 U	< 0.5 U	< 0.5 U	< 0.5 U	< 0.5 U	< 0.5 U	< 0.5 U	< 0.5 U	< 0.5 U	< 0.5 U	< 0.5 U	< 0.5 U	< 1 U	< 0.5 U	< 0.5 U	< 0.5 U	< 0.5 U
1,1-Dichloroethene	260	7	< 0.5 U	< 0.5 U	**0.15 J**	< 0.5 U	< 0.5 U	< 0.5 U	< 0.5 U	< 0.5 U	< 0.5 U	< 0.5 U	< 0.5 U	< 0.5 U	< 1 U	< 0.5 U	< 0.5 U	< 0.5 U	< 0.5 U
1,2,4-Trichlorobenzene	0.99	70	< 0.5 U	< 0.5 U	< 0.5 U	< 0.5 U	< 0.5 U	< 0.5 U	< 0.5 U	< 0.5 U	< 0.5 U	< 0.5 U	< 0.5 U	< 0.5 U	< 1 U	< 0.5 U	< 0.5 U	< 0.5 U	< 0.5 U
1,2-Dibromo-3-chloropropane (DBCP)	0.00032	0.2	< 0.5 U	< 0.5 U	< 0.5 U	< 0.5 U	< 0.5 U	< 0.5 U	< 0.5 U	< 0.5 U	< 0.5 U	< 0.5 U	< 0.5 U	< 0.5 U	< 1 U	< 0.5 U	< 0.5 U	< 0.5 U	< 0.5 U
1,2-Dibromoethane	0.0065	0.05	< 0.5 U	< 0.5 U	< 0.5 U	< 0.5 U	< 0.5 U	< 0.5 U	< 0.5 U	< 0.5 U	< 0.5 U	< 0.5 U	< 0.5 U	< 0.5 U	< 1 U	< 0.5 U	< 0.5 U	< 0.5 U	< 0.5 U
1,2-Dichlorobenzene	280	600	< 0.5 U	< 0.5 U	< 0.5 U	< 0.5 U	< 0.5 U	< 0.5 U	< 0.5 U	< 0.5 U	< 0.5 U	< 0.5 U	< 0.5 U	< 0.5 U	< 1 U	< 0.5 U	< 0.5 U	< 0.5 U	< 0.5 U
1,2-Dichloroethane	0.15	5	< 0.5 U	< 0.5 U	< 0.5 U	< 0.5 U	< 0.5 U	< 0.5 U	< 0.5 U	< 0.5 U	< 0.5 U	< 0.5 U	< 0.5 U	< 0.5 U	< 1 U	< 0.5 U	< 0.5 U	< 0.5 U	< 0.5 U
1,2-Dichloropropane	0.38	5	< 0.5 U	< 0.5 U	< 0.5 U	< 0.5 U	< 0.5 U	< 0.5 U	< 0.5 U	< 0.5 U	< 0.5 U	< 0.5 U	< 0.5 U	< 0.5 U	< 1 U	< 0.5 U	< 0.5 U	< 0.5 U	< 0.5 U
1,3-Dichlorobenzene			< 0.5 U	< 0.5 U	< 0.5 U	< 0.5 U	< 0.5 U	< 0.5 U	< 0.5 U	< 0.5 U	< 0.5 U	< 0.5 U	< 0.5 U	< 0.5 U	< 1 U	< 0.5 U	< 0.5 U	< 0.5 U	< 0.5 U
1,4-Dichlorobenzene	0.42	75	< 0.5 U	< 0.5 U	< 0.5 U	< 0.5 U	< 0.5 U	< 0.5 U	< 0.5 U	< 0.5 U	< 0.5 U	< 0.5 U	< 0.5 U	< 0.5 U	< 1 U	< 0.5 U	< 0.5 U	< 0.5 U	< 0.5 U
2-Butanone	4900		< 10 U	< 10 U	< 10 U	< 10 U	< 10 U	< 10 U	< 10 U	< 10 U	< 10 U	**3.1 J**	< 10 U	< 10 U	< 20 U	< 10 U	**2 J**	< 10 U	**2.7 J**
2-Hexanone	34		< 10 U	< 10 U	< 10 U	**0.27 J**	< 10 U	< 10 U	< 10 U	< 10 U	< 10 U	**0.34 J**	< 10 U	< 10 U	< 20 U	< 10 U	< 10 U	< 10 U	< 10 U
4-Methyl-2-pentanone	1000		< 10 U	< 10 U	< 10 U	< 10 U	< 10 U	< 10 U	< 10 U	< 10 U	< 10 U	< 10 U	< 10 U	< 10 U	< 20 U	< 10 U	< 10 U	< 10 U	< 10 U
Acetone	12000		3.5 UB	4.3 UB	5.8 UB	8.6 UB	**3.1 J**	**7.9 J**	**4.4 J**	**8.4 J**	**5.3 J**	**18**	**6.1 J**	**7.5 J**	**12 J**	**20**	10 UB	4.8 UB	**17**
Benzene	0.39	5	**0.33 J**	**0.39 J**	**0.92**	**0.13 J**	**0.2 J**	**0.25 J**	**0.4 J**	**1**	< 0.5 U	**0.95**	**0.25 J**	**0.26 J**	< 1 U	< 0.5 U	**0.3 J**	< 0.5 U	**0.22 J**
Benzene, 1-methylethyl	390		< 0.5 U	< 0.5 U	< 0.5 U	< 0.5 U	< 0.5 U	< 0.5 U	< 0.5 U	< 0.5 U	< 0.5 U	< 0.5 U	< 0.5 U	< 0.5 U	< 1 U	< 0.5 U	< 0.5 U	< 0.5 U	< 0.5 U
Bromodichloromethane	0.12	80	< 0.5 U	< 0.5 U	< 0.5 U	< 0.5 U	< 0.5 U	< 0.5 U	< 0.5 U	< 0.5 U	< 0.5 U	< 0.5 U	< 0.5 U	< 0.5 U	< 1 U	< 0.5 U	< 0.5 U	< 0.5 U	< 0.5 U
Bromoform	7.9	80	< 0.5 U	< 0.5 U	< 0.5 U	< 0.5 U	< 0.5 U	< 0.5 U	< 0.5 U	< 0.5 U	< 0.5 U	< 0.5 U	< 0.5 U	< 0.5 U	< 1 U	< 0.5 U	< 0.5 U	< 0.5 U	< 0.5 U
Bromomethane	7		< 0.5 U	< 0.5 U	< 0.5 U	< 0.5 U	< 0.5 UJ	< 0.5 U	< 0.5 U	< 0.5 U	< 0.5 U	< 0.5 U	< 0.5 U	< 0.5 U	< 1 UJ	< 0.5 U	< 0.5 UJ	< 0.5 U	< 0.5 U
Carbon disulfide	720		0.18 UB	0.4 UB	0.8 UB	**1.3**	**0.28 J**	**0.3 J**	**0.67**	**0.48 J**	**0.24 J**	< 0.5 U	**0.4 J**	**0.25 J**	< 1 U	**0.96**	**0.34 J**	**0.7**	**0.26 J**
Carbon tetrachloride	0.39	5	< 0.5 U	< 0.5 U	< 0.5 U	< 0.5 U	< 0.5 U	< 0.5 U	< 0.5 U	< 0.5 U	< 0.5 U	< 0.5 U	< 0.5 U	< 0.5 U	< 1 U	< 0.5 U	< 0.5 U	< 0.5 U	< 0.5 U
CFC-11	1100		< 0.5 U	< 0.5 U	< 0.5 U	< 0.5 U	< 0.5 U	< 0.5 U	< 0.5 U	< 0.5 U	< 0.5 U	< 0.5 U	< 0.5 U	< 0.5 U	< 1 U	< 0.5 U	< 0.5 U	< 0.5 U	< 0.5 U
CFC-12	190		< 0.5 U	< 0.5 U	< 0.5 U	< 0.5 U	< 0.5 U	< 0.5 U	< 0.5 U	< 0.5 U	< 0.5 U	< 0.5 U	< 0.5 U	< 0.5 U	< 1 U	< 0.5 U	< 0.5 U	< 0.5 U	< 0.5 U
Chlorobenzene	72	100	< 0.5 U	< 0.5 U	< 0.5 U	< 0.5 U	< 0.5 U	< 0.5 U	< 0.5 U	< 0.5 U	< 0.5 U	< 0.5 U	< 0.5 U	< 0.5 U	< 1 U	< 0.5 U	< 0.5 U	< 0.5 U	< 0.5 U
Chloroethane	21000		< 0.5 U	< 0.5 U	< 0.5 U	< 0.5 U	< 0.5 U	< 0.5 U	< 0.5 U	< 0.5 U	< 0.5 U	< 0.5 U	< 0.5 U	< 0.5 U	< 1 U	< 0.5 U	< 0.5 U	< 0.5 U	< 0.5 U
Chloroform	0.19	80	< 0.5 U	< 0.5 U	< 0.5 U	< 0.5 U	< 0.5 U	< 0.5 U	< 0.5 U	< 0.5 U	< 0.5 U	< 0.5 U	< 0.5 U	< 0.5 U	< 1 U	< 0.5 U	< 0.5 U	< 0.5 U	< 0.5 U
Chloromethane	190		< 0.5 U	< 0.5 U	< 0.5 U	< 0.5 U	< 0.5 U	**0.22 J**	**0.25 J**	**0.21 J**	**0.2 J**	**0.39 J**	< 0.5 U	< 0.5 U	< 1 U	< 0.5 U	< 0.5 U	**0.19 J**	< 0.5 U
cis-1,2-Dichloroethene	28	70	**2.2**	**2.4**	**5.6**	< 0.5 U	< 0.5 U	< 0.5 U	< 0.5 U	< 0.5 U	**2.8**	**0.7**	**3.1**	**2.9**	< 1 U	**0.21 J**	**0.42 J**	**0.13 J**	< 0.5 U
cis-1,3-Dichloropropene			< 0.5 U	< 0.5 U	< 0.5 U	< 0.5 U	< 0.5 U	< 0.5 U	< 0.5 U	< 0.5 U	< 0.5 U	< 0.5 U	< 0.5 U	< 0.5 U	< 1 U	< 0.5 U	< 0.5 U	< 0.5 U	< 0.5 U
Cyclohexane	13000		< 0.5 U	< 0.5 U	< 0.5 U	< 0.5 U	< 0.5 U	< 0.5 U	< 0.5 U	< 0.5 U	< 0.5 U	**0.72**	< 0.5 U	< 0.5 U	< 1 U	< 0.5 U	< 0.5 U	< 0.5 U	< 0.5 U
Dibromochloromethane	0.15	80	< 0.5 U	< 0.5 U	< 0.5 U	< 0.5 U	< 0.5 U	< 0.5 U	< 0.5 U	< 0.5 U	< 0.5 U	< 0.5 U	< 0.5 U	< 0.5 U	< 1 U	< 0.5 U	< 0.5 U	< 0.5 U	< 0.5 U
Ethylbenzene	1.3	700	< 0.5 U	< 0.5 U	< 0.5 U	< 0.5 U	< 0.5 U	< 0.5 U	< 0.5 U	< 0.5 U	< 0.5 U	**0.22 J**	< 0.5 U	< 0.5 U	< 1 U	< 0.5 U	< 0.5 U	< 0.5 U	< 0.5 U
Methyl acetate	16000		< 1 U	< 1 U	< 1 U	< 1 U	< 1 U	< 1 U	< 1 U	< 1 U	< 1 U	< 1 U	< 1 U	< 1 U	< 2 U	< 1 U	< 1 U	< 1 U	< 1 U
Methylcyclohexane			< 5 U	< 5 U	< 5 U	< 5 U	< 5 U	< 5 U	< 5 U	< 5 U	< 5 U	< 5 U	< 5 U	< 5 U	< 10 U	< 5 U	< 5 U	< 5 U	< 5 U
Methylene chloride	9.9	5	0.19 UB	0.17 UB	0.17 UB	0.2 UB	0.24 UB	0.23 UB	0.24 UB	0.23 UB	0.22 UB	0.37 UB	0.24 UB	0.26 UB	0.59 UB	0.25 UB	0.34 UB	0.23 UB	0.27 UB
Styrene	1100	100	< 0.5 U	< 0.5 U	< 0.5 U	< 0.5 U	< 0.5 U	< 0.5 U	< 0.5 U	< 0.5 U	< 0.5 U	< 0.5 U	< 0.5 U	< 0.5 U	< 1 U	< 0.5 U	< 0.5 U	< 0.5 U	< 0.5 U
tert-Butyl methyl ether	12		< 0.5 U	< 0.5 U	< 0.5 U	< 0.5 U	< 0.5 U	< 0.5 U	< 0.5 U	< 0.5 U	< 0.5 U	< 0.5 U	< 0.5 U	< 0.5 U	< 1 U	< 0.5 U	< 0.5 U	< 0.5 U	< 0.5 U
Tetrachloroethene	9.7	5	**4.6**	**6.8**	**55**	< 0.5 U	< 0.5 U	< 0.5 U	< 0.5 U	< 0.5 U	**16**	< 0.5 U	**5.5**	**5.2**	< 1 U	< 0.5 U	< 0.5 U	**0.98**	< 0.5 U
Toluene	860	1000	< 0.5 U	< 0.5 U	< 0.5 U	< 0.5 U	< 0.5 U	**0.24 J**	< 0.5 U	< 0.5 U	< 0.5 U	**1.1**	< 0.5 U	< 0.5 U	< 1 U	< 0.5 U	**0.41 J**	< 0.5 U	**0.44 J**
trans-1,2-Dichloroethene	86	100	**0.58**	**0.57**	< 0.5 U	< 0.5 U	< 0.5 U	< 0.5 U	< 0.5 U	< 0.5 U	**0.25 J**	< 0.5 U	**0.32 J**	**0.3 J**	< 1 U	< 0.5 U	**0.12 J**	< 0.5 U	< 0.5 U
trans-1,3-Dichloropropene			< 0.5 U	< 0.5 U	< 0.5 U	< 0.5 U	< 0.5 U	< 0.5 U	< 0.5 U	< 0.5 U	< 0.5 U	< 0.5 U	< 0.5 U	< 0.5 U	< 1 U	< 0.5 U	< 0.5 U	< 0.5 U	< 0.5 U
Trichloroethene	0.44	5	**14**	**12**	**43**	< 0.5 U	< 0.5 U	< 0.5 U	< 0.5 U	< 0.5 U	**38**	**4**	**18**	**17**	< 1 U	**0.76**	**1.6**	**0.91**	< 0.5 U
Vinyl chloride	0.015	2	< 0.5 U	< 0.5 U	< 0.5 U	< 0.5 U	< 0.5 U	< 0.5 U	< 0.5 U	< 0.5 U	< 0.5 U	< 0.5 U	< 0.5 U	< 0.5 U	< 1 U	< 0.5 U	< 0.5 U	< 0.5 U	< 0.5 U
Xylenes (total)	190	10000	< 0.5 U	< 0.5 U	< 0.5 U	< 0.5 U	< 0.5 U	**0.27 J**	**0.27 J**	< 0.5 U	< 0.5 U	**0.3 J**	< 0.5 U	< 0.5 U	< 1 U	< 0.5 U	< 0.5 U	< 0.5 U	< 0.5 U
SVOCs - USEPA Method SW8270 (µg/L)																			
1,1'-Biphenyl	0.83		< 1.1 U	< 1 U	< 1.1 U	< 1.4 U	< 1 U	< 1 U	< 1 U	< 1 U	< 1 U	< 1 U	< 1 U	< 1 U	< 10 UJ	< 1 U	< 1 U	< 1 U	< 1 U
2,4,5-Trichlorophenol	890		< 1.1 U	< 1 U	< 1.1 U	< 1.4 U	< 1 U	< 1 U	< 1 U	< 1 U	< 1 U	< 1 U	< 1 U	< 1 U	< 1 U	< 1 U	< 1 U	< 1 U	< 1 U
2,4,6-Trichlorophenol	3.5		< 1.1 U	< 1 U	< 1.1 U	< 1.4 U	< 1 U	< 1 U	< 1 U	< 1 U	< 1 U	< 1 U	< 1 U	< 1 U	< 1 U	< 1 U	< 1 U	< 1 U	< 1 U
2,4-Dichlorophenol	35		< 1.1 U	< 1 U	< 1.1 U	< 1.4 U	< 1 U	< 1 U	< 1 U	< 1 U	< 1 U	< 1 U	< 1 U	< 1 U	< 1 U	< 1 U	< 1 U	< 1 U	< 1 U
2,4-Dimethylphenol	270		< 1.1 U	< 1 U	< 1.1 U	< 1.4 U	< 1 U	< 1 U	< 1 U	< 1 U	< 1 U	< 1 U	< 1 U	< 1 U	< 1 U	< 1 U	< 1 U	< 1 U	< 1 U
2,4-Dinitrophenol	30		< 5.3 U	< 5.1 U	< 5.3 U	< 7.1 U	< 5.1 U	< 5.1 U	< 5.1 U	< 5.1 U	< 5.1 U	< 5.1 U	< 5.1 U	< 5.1 U	< 5.2 U	< 5.1 U	< 5.1 U	< 5.1 U	< 5.1 U
2,4-Dinitrotoluene	0.2		< 2.1 U	< 2 U	< 2.1 U	< 2.9 U	< 2 U	< 2 U	< 2 U	< 2 U	< 2 U	< 2 U	< 2 U	< 2 U	< 20 UJ	< 2 U	< 2 U	< 2 U	< 2 U
2,6-Dinitrotoluene	15		< 2.1 U	< 2 U	< 2.1 U	< 2.9 U	< 2 U	< 2 U	< 2 U	< 2 U	< 2 U	< 2 U	< 2 U	< 2 U	< 20 UJ	< 2 U	< 2 U	< 2 U	< 2 U
2-Chloronaphthalene	550		< 1.1 U	< 1 U	< 1.1 U	< 1.4 U	< 1 U	< 1 U	< 1 U	< 1 U	< 1 U	< 1 U	< 1 U	< 1 U	< 10 UJ	< 1 U	< 1 U	< 1 U	< 1 U
2-Chlorophenol	71		< 1.1 U	< 1 U	< 1.1 U	< 1.4 U	< 1 U	< 1 U	< 1 U	< 1 U	< 1 U	< 1 U	< 1 U	< 1 U	< 1 U	< 1 U	< 1 U	< 1 U	< 1 U
2-Methyl-4,6-dinitrophenol	1.2		< 5.3 U	< 5.1 U	< 5.3 U	< 7.1 U	< 5.1 U	< 5.1 U	< 5.1 U	< 5.1 U	< 5.1 U	< 5.1 U	< 5.1 U	< 5.1 U	< 5.2 U	< 5.1 U	< 5.1 U	< 5.1 U	< 5.1 U
2-Methylnaphthalene	27		< 1.1 U	< 1 U	< 1.1 U	< 1.4 U	< 1 U	< 1 U	< 1 U	< 1 U	< 1 U	< 1 U	< 1 U	< 1 U	< 10 UJ	< 1 U	< 1 U	< 1 U	< 1 U
2-Methylphenol	720		< 1.1 U	< 1 U	< 1.1 U	< 1.4 U	< 1 U	< 1 U	< 1 U	< 1 U	< 1 U	< 1 U	< 1 U	< 1 U	< 1 U	< 1 U	< 1 U	< 1 U	< 1 U
2-Nitrobenzenamine	150		< 2.1 U	< 2 U	< 2.1 U	< 2.9 U	< 2 U	< 2 U	< 2 U	< 2 U	< 2 U	< 2 U	< 2 U	< 2 U	< 20 UJ	< 2 U	< 2 U	< 2 U	< 2 U
2-Nitrophenol			< 2.1 U	< 2 U	< 2.1 U	< 2.9 U	< 2 U	< 2 U	< 2 U	< 2 U	< 2 U	< 2 U	< 2 U	< 2 U	< 2.1 U	< 2 U	< 2 U	< 2 U	< 2 U
3,3'-Dichlorobenzidine	0.11		< 5.3 U	< 5.1 U	< 5.3 U	< 7.1 U	< 5.1 U	< 5.1 U	< 5.1 U	< 5.1 U	< 5.1 U	< 5.1 U	< 5.1 U	< 5.1 U	< 50 UJ	< 5.1 U	< 5.1 U	< 5.1 U	< 5.1 U
3-Nitrobenzenamine			< 2.1 U	< 2 U	< 2.1 U	< 2.9 U	< 2 U	< 2 U	< 2 U	< 2 U	< 2 U	< 2 U	< 2 U	< 2 U	< 20 UJ	< 2 U	< 2 U	< 2 U	< 2 U
4-Bromophenyl phenyl ether			< 1.1 U	< 1 U	< 1.1 U	< 1.4 U	< 1 U	< 1 U	< 1 U	< 1 U	< 1 U	< 1 U	< 1 U	< 1 U	< 10 UJ	< 1 U	< 1 U	< 1 U	< 1 U
4-Chloro-3-methylphenol	1100		< 1.1 U	< 1 U	< 1.1 U	< 1.4 U	< 1 U	< 1 U	< 1 U	< 1 U	< 1 U	< 1 U	< 1 U	< 1 U	< 1 U	< 1 U	< 1 U	< 1 U	< 1 U
4-Chlorobenzenamine	0.32		< 1.1 U	< 1 U	< 1.1 U	< 1.4 U	< 1 U	< 1 U	< 1 U	< 1 U	< 1 U	< 1 U	< 1 U	< 1 U	< 10 UJ	< 1 U	< 1 U	< 1 U	< 1 U
4-Chlorophenyl phenyl ether			< 1.1 U	< 1 U	< 1.1 U	< 1.4 U	< 1 U	< 1 U	< 1 U	< 1 U	< 1 U	< 1 U	< 1 U	< 1 U	< 10 UJ	< 1 U	< 1 U	< 1 U	< 1 U
4-Methylphenol	1400		< 2.1 U	< 2 U	< 2.1 U	< 2.9 U	< 2 U	< 2 U	< 2 U	< 2 U	< 2 U	< 2 U	< 2 U	< 2 U	< 2.1 U	< 2 U	< 2 U	< 2 U	< 2 U
4-Nitrobenzenamine	3.3		< 2.1 U	< 2 U	< 2.1 U	< 2.9 U	< 2 U	< 2 U	< 2 U	< 2 U	< 2 U	< 2 U	< 2 U	< 2 U	< 20 UJ	< 2 U	< 2 U	< 2 U	< 2 U

Footnotes appear on last page

Table 4-4
March through September 2010 Vertical Aquifer Profile Groundwater Data
SWMU 39
Fort Stewart, Georgia

		Location ID	F39TW04	F39TW04	F39TW04	F39TW04	F39TW05	F39TW05	F39TW05	F39TW05	F39TW06	F39TW06	F39TW06	F39TW06-DUP	F39TW06	F39TW07	F39TW07	F39TW07	F39TW07
		Depth (ft bgs)	10-15	20-25	30-35	40-45	10-15	20-25	30-35	40-45	10-15	20-25	30-35	30-35	40-45	10-15	20-25	30-35	40-45
		Sample Date	4/1/2010	4/1/2010	4/1/2010	4/1/2010	4/5/2010	4/6/2010	4/6/2010	4/5/2010	4/6/2010	4/7/2010	4/7/2010	4/7/2010	4/6/2010	4/7/2010	4/8/2010	4/8/2010	4/7/2010
Chemical Name	Tap Water RSL[1]	MCL[2]																	
SVOCs continued - USEPA Method SW8270 (µg/L)																			
4-Nitrophenol			< 5.3 U	< 5.1 U	< 5.3 U	< 7.1 U	< 5.1 U	< 5.1 U	< 5.1 U	< 5.1 U	< 5.1 U	< 5.1 U	< 5.1 U	< 5.1 U	< 5.2 U	< 5.1 U	< 5.1 U	< 5.1 U	< 5.1 U
Acenaphthene	400		< 1.1 U	< 1 U	< 1.1 U	< 1.4 U	< 1 U	< 1 U	< 1 U	< 1 U	< 1 U	< 1 U	< 1 U	< 1 U	< 10 UJ	< 1 U	< 1 U	< 1 U	< 1 U
Acenaphthylene			< 1.1 U	< 1 U	< 1.1 U	< 1.4 U	< 1 U	< 1 U	< 1 U	< 1 U	< 1 U	< 1 U	< 1 U	< 1 U	< 10 UJ	< 1 U	< 1 U	< 1 U	< 1 U
Acetophenone	1500		< 1.1 U	< 1 U	< 1.1 U	< 1.4 U	< 1 U	< 1 U	< 1 U	< 1 U	< 1 U	< 1 U	< 1 U	< 1 U	< 10 UJ	< 1 U	< 1 U	< 1 U	< 1 U
Anthracene	1300		< 1.1 U	< 1 U	< 1.1 U	< 1.4 U	< 1 U	< 1 U	< 1 U	< 1 U	< 1 U	< 1 U	< 1 U	< 1 U	< 10 UJ	< 1 U	< 1 U	< 1 U	< 1 U
Atrazine	0.26	3	< 1.1 U	< 1 U	< 1.1 U	< 1.4 U	< 1 U	< 1 U	< 1 U	< 1 U	< 1 U	< 1 U	< 1 U	< 1 U	< 10 UJ	< 1 U	< 1 U	< 1 U	< 1 U
Benz(a)anthracene	0.029		< 1.1 U	< 1 U	< 1.1 U	< 1.4 U	< 1 U	< 1 U	< 1 U	< 1 U	< 1 U	< 1 U	< 1 U	< 1 U	< 10 UJ	< 1 U	< 1 U	< 1 U	< 1 U
Benzaldehyde	1500		< 5.3 U	< 5.1 U	< 5.3 U	< 7.1 U	< 5.1 U	< 5.1 U	< 5.1 U	< 5.1 U	< 5.1 U	< 5.1 U	< 5.1 U	< 5.1 U	< 50 UJ	< 5.1 U	< 5.1 U	< 5.1 U	< 5.1 U
Benzo(a)pyrene	0.0029	0.2	< 1.1 U	< 1 U	< 1.1 U	< 1.4 U	< 1 U	< 1 U	< 1 U	< 1 U	< 1 U	< 1 U	< 1 U	< 1 U	< 10 UJ	< 1 U	< 1 U	< 1 U	< 1 U
Benzo(b)fluoranthene	0.029		< 1.1 U	< 1 U	< 1.1 U	< 1.4 U	< 1 U	< 1 U	< 1 U	< 1 U	< 1 U	< 1 U	< 1 U	< 1 U	< 10 UJ	< 1 U	< 1 U	< 1 U	< 1 U
Benzo(ghi)perylene			< 1.1 U	< 1 U	< 1.1 U	< 1.4 U	< 1 U	< 1 U	< 1 U	< 1 U	< 1 U	< 1 U	< 1 U	< 1 U	< 10 UJ	< 1 U	< 1 U	< 1 U	< 1 U
Benzo(k)fluoranthene	0.29		< 1.1 U	< 1 U	< 1.1 U	< 1.4 U	< 1 U	< 1 U	< 1 U	< 1 U	< 1 U	< 1 U	< 1 U	< 1 U	< 10 UJ	< 1 U	< 1 U	< 1 U	< 1 U
Bis(2-chloroethoxy)methane	46		< 1.1 U	< 1 U	< 1.1 U	< 1.4 U	< 1 U	< 1 U	< 1 U	< 1 U	< 1 U	< 1 U	< 1 U	< 1 U	< 10 UJ	< 1 U	< 1 U	< 1 U	< 1 U
Bis(2-chloroethyl) ether	0.012		< 1.1 U	< 1 U	< 1.1 U	< 1.4 U	< 1 U	< 1 U	< 1 U	< 1 U	< 1 U	< 1 U	< 1 U	< 1 U	< 10 UJ	< 1 U	< 1 U	< 1 U	< 1 U
Bis(2-chloroisopropyl) ether	0.31		< 1.1 U	< 1 U	< 1.1 U	< 1.4 U	< 1 U	< 1 U	< 1 U	< 1 U	< 1 U	< 1 U	< 1 U	< 1 U	< 10 UJ	< 1 U	< 1 U	< 1 U	< 1 U
Bis(2-ethylhexyl)phthalate	4.8	6	< 5.3 U	< 5.1 U	< 5.3 U	< 7.1 U	< 5.1 U	< 5.1 U	< 5.1 U	< 5.1 U	< 5.1 U	< 5.1 U	< 5.1 U	< 5.1 U	< 50 UJ	< 5.1 U	< 5.1 U	< 5.1 U	< 5.1 U
Butyl benzyl phthalate	14		< 5.3 U	< 5.1 U	< 5.3 U	< 7.1 U	< 5.1 U	< 5.1 U	< 5.1 U	< 5.1 U	< 5.1 U	< 5.1 U	< 5.1 U	< 5.1 U	< 50 UJ	< 5.1 U	< 5.1 U	< 5.1 U	< 5.1 U
Caprolactam	7700		< 5.3 U	< 5.1 U	< 5.3 U	**14**	< 5.1 U	< 5.1 U	< 5.1 U	< 5.1 U	< 5.1 U	< 5.1 U	< 5.1 U	< 5.1 U	< 50 UJ	< 5.1 U	< 5.1 U	< 5.1 U	< 5.1 U
Carbazole			< 1.1 U	< 1 U	< 1.1 U	< 1.4 U	< 1 U	< 1 U	< 1 U	< 1 U	< 1 U	< 1 U	< 1 U	< 1 U	< 10 UJ	< 1 U	< 1 U	< 1 U	< 1 U
Chrysene	2.9		< 1.1 U	< 1 U	< 1.1 U	< 1.4 U	< 1 U	< 1 U	< 1 U	< 1 U	< 1 U	< 1 U	< 1 U	< 1 U	< 10 UJ	< 1 U	< 1 U	< 1 U	< 1 U
Dibenz(a,h)anthracene	0.0029		< 1.1 U	< 1 U	< 1.1 U	< 1.4 U	< 1 U	< 1 U	< 1 U	< 1 U	< 1 U	< 1 U	< 1 U	< 1 U	< 10 UJ	< 1 U	< 1 U	< 1 U	< 1 U
Dibenzofuran	5.8		< 1.1 U	< 1 U	< 1.1 U	< 1.4 U	< 1 U	< 1 U	< 1 U	< 1 U	< 1 U	< 1 U	< 1 U	< 1 U	< 10 UJ	< 1 U	< 1 U	< 1 U	< 1 U
Diethyl phthalate	11000		< 5.3 U	< 5.1 U	< 5.3 U	< 7.1 U	< 5.1 U	< 5.1 U	< 5.1 U	< 5.1 U	< 5.1 U	< 5.1 U	< 5.1 U	< 5.1 U	< 50 UJ	< 5.1 U	< 5.1 U	< 5.1 U	**2.9 J**
Dimethyl phthalate			< 5.3 U	< 5.1 U	< 5.3 U	< 7.1 U	< 5.1 U	< 5.1 U	< 5.1 U	< 5.1 U	< 5.1 U	< 5.1 U	< 5.1 U	< 5.1 U	< 50 UJ	< 5.1 U	< 5.1 U	< 5.1 U	< 5.1 U
Di-n-butyl phthalate	670		< 5.3 U	< 5.1 U	< 5.3 U	< 7.1 U	< 5.1 U	< 5.1 U	< 5.1 U	< 5.1 U	< 5.1 U	< 5.1 U	< 5.1 U	< 5.1 U	< 50 UJ	< 5.1 U	< 5.1 U	< 5.1 U	< 5.1 U
Di-n-octylphthalate	190		< 5.3 U	< 5.1 U	< 5.3 U	< 7.1 U	< 5.1 U	< 5.1 U	< 5.1 U	< 5.1 U	< 5.1 U	< 5.1 U	< 5.1 U	< 5.1 U	< 50 UJ	< 5.1 U	< 5.1 U	< 5.1 U	< 5.1 U
Fluoranthene	630		< 1.1 U	< 1 U	< 1.1 U	< 1.4 U	< 1 U	< 1 U	< 1 U	< 1 U	< 1 U	< 1 U	< 1 U	< 1 U	< 10 UJ	< 1 U	< 1 U	< 1 U	< 1 U
Fluorene	220		< 1.1 U	< 1 U	< 1.1 U	< 1.4 U	< 1 U	< 1 U	< 1 U	< 1 U	< 1 U	< 1 U	< 1 U	< 1 U	< 10 UJ	< 1 U	< 1 U	< 1 U	< 1 U
Hexachlorobenzene	0.042	1	< 1.1 U	< 1 U	< 1.1 U	< 1.4 U	< 1 U	< 1 U	< 1 U	< 1 U	< 1 U	< 1 U	< 1 U	< 1 U	< 10 UJ	< 1 U	< 1 U	< 1 U	< 1 U
Hexachlorobutadiene	0.26		< 1.1 U	< 1 U	< 1.1 U	< 1.4 U	< 1 U	< 1 U	< 1 U	< 1 U	< 1 U	< 1 U	< 1 U	< 1 U	< 10 UJ	< 1 U	< 1 U	< 1 U	< 1 U
Hexachlorocyclopentadiene	22	50	< 5.3 U	< 5.1 U	< 5.3 U	< 7.1 U	< 5.1 U	< 5.1 U	< 5.1 U	< 5.1 U	< 5.1 U	< 5.1 U	< 5.1 U	< 5.1 U	< 50 UJ	< 5.1 U	< 5.1 U	< 5.1 U	< 5.1 U
Hexachloroethane	0.79		< 1.1 U	< 1 U	< 1.1 U	< 1.4 U	< 1 U	< 1 U	< 1 U	< 1 U	< 1 U	< 1 U	< 1 U	< 1 U	< 10 UJ	< 1 U	< 1 U	< 1 U	< 1 U
Indeno(1,2,3-cd)pyrene	0.029		< 1.1 U	< 1 U	< 1.1 U	< 1.4 U	< 1 U	< 1 U	< 1 U	< 1 U	< 1 U	< 1 U	< 1 U	< 1 U	< 10 UJ	< 1 U	< 1 U	< 1 U	< 1 U
Isophorone	67		< 1.1 U	< 1 U	< 1.1 U	< 1.4 U	< 1 U	< 1 U	< 1 U	< 1 U	< 1 U	< 1 U	< 1 U	< 1 U	< 10 UJ	< 1 U	< 1 U	< 1 U	< 1 U
Naphthalene	0.14		< 1.1 U	< 1 U	< 1.1 U	< 1.4 U	< 1 U	< 1 U	< 1 U	< 1 U	< 1 U	< 1 U	< 1 U	< 1 U	< 10 UJ	< 1 U	< 1 U	< 1 U	< 1 U
Nitrobenzene	0.12		< 1.1 U	< 1 U	< 1.1 U	< 1.4 U	< 1 U	< 1 U	< 1 U	< 1 U	< 1 U	< 1 U	< 1 U	< 1 U	< 10 UJ	< 1 U	< 1 U	< 1 U	< 1 U
N-Nitroso-di-n-propylamine	0.0093		< 1.1 U	< 1 U	< 1.1 U	< 1.4 U	< 1 U	< 1 U	< 1 U	< 1 U	< 1 U	< 1 U	< 1 U	< 1 U	< 10 UJ	< 1 U	< 1 U	< 1 U	< 1 U
N-Nitrosodiphenylamine	10		< 1.1 U	< 1 U	< 1.1 U	< 1.4 U	< 1 U	< 1 U	< 1 U	< 1 U	< 1 U	< 1 U	< 1 U	< 1 U	< 10 UJ	< 1 U	< 1 U	< 1 U	< 1 U
Pentachlorophenol	0.035	1	< 5.3 U	< 5.1 U	< 5.3 U	< 7.1 U	< 5.1 U	< 5.1 U	< 5.1 U	< 5.1 U	< 5.1 U	< 5.1 U	< 5.1 U	< 5.1 U	< 5.2 U	< 5.1 U	< 5.1 U	< 5.1 U	< 5.1 U
Phenanthrene			< 1.1 U	< 1 U	< 1.1 U	< 1.4 U	< 1 U	< 1 U	< 1 U	< 1 U	< 1 U	< 1 U	< 1 U	< 1 U	< 10 UJ	< 1 U	< 1 U	< 1 U	< 1 U
Phenol	4500		< 1.1 U	< 1 U	< 1.1 U	< 1.4 U	< 1 U	< 1 U	< 1 U	< 1 U	< 1 U	< 1 U	< 1 U	< 1 U	< 1 U	< 1 U	< 1 U	< 1 U	< 1 U
Pyrene	87		< 1.1 U	< 1 U	< 1.1 U	< 1.4 U	< 1 U	< 1 U	< 1 U	< 1 U	< 1 U	< 1 U	< 1 U	< 1 U	< 10 UJ	< 1 U	< 1 U	< 1 U	< 1 U

Footnotes appear on last page

Table 4-4
March through September 2010 Vertical Aquifer Profile Groundwater Data
SWMU 39
Fort Stewart, Georgia

		Location ID	F39TW08	F39TW08	F39TW08	F39TW08	F39TW09	F39TW09	F39TW09	F39TW09	F39TW10	F39TW10	F39TW10	F39TW10	F39TW11	F39TW11	F39TW11	F39TW11
		Depth (ft bgs)	10-15	20-25	30-35	40-45	10-15	20-25	30-35	40-45	10-15	20-25	30-35	40-45	10-15	20-25	30-35	40-45
		Sample Date	4/8/2010	4/8/2010	4/8/2010	4/8/2010	4/12/2010	4/12/2010	4/12/2010	4/12/2010	4/13/2010	4/13/2010	4/13/2010	4/13/2010	4/14/2010	4/14/2010	4/14/2010	4/14/2010
Chemical Name	Tap Water RSL[1]	MCL[2]																
VOCs - USEPA Method SW8260 (µg/L)																		
1,1,1-Trichloroethane	7500	200	< 0.5 U	< 0.5 U	< 0.5 U	< 1 U	< 0.5 U	< 0.5 U	< 0.5 U	< 0.5 U	< 0.5 U	< 0.5 U	< 0.5 U	< 0.5 U	< 0.5 U	< 0.5 U	< 0.5 U	< 0.5 U
1,1,2,2-Tetrachloroethane	0.066		< 0.5 U	< 0.5 U	< 0.5 U	< 1 U	< 0.5 U	< 0.5 U	< 0.5 U	< 0.5 U	< 0.5 U	< 0.5 U	< 0.5 U	< 0.5 U	< 0.5 U	< 0.5 U	< 0.5 U	< 0.5 U
1,1,2-Trichloro-1,2,2-Trifluoroethane	53000		< 0.5 U	< 0.5 U	< 0.5 U	< 1 U	< 0.5 U	< 0.5 U	< 0.5 U	< 0.5 U	< 0.5 U	< 0.5 U	< 0.5 U	< 0.5 U	< 0.5 U	< 0.5 U	< 0.5 U	< 0.5 U
1,1,2-Trichloroethane	0.24	5	< 0.5 U	< 0.5 U	< 0.5 U	< 1 U	< 0.5 U	< 0.5 U	< 0.5 U	< 0.5 U	< 0.5 U	< 0.5 U	< 0.5 U	< 0.5 U	< 0.5 U	< 0.5 U	< 0.5 U	< 0.5 U
1,1-Dichloroethane	2.4		< 0.5 U	< 0.5 U	< 0.5 U	< 1 U	< 0.5 U	< 0.5 U	< 0.5 U	< 0.5 U	< 0.5 U	< 0.5 U	< 0.5 U	< 0.5 U	< 0.5 U	< 0.5 U	< 0.5 U	< 0.5 U
1,1-Dichloroethene	260	7	< 0.5 U	< 0.5 U	< 0.5 U	< 1 U	< 0.5 U	< 0.5 U	**0.11 J**	< 0.5 U	< 0.5 U	< 0.5 U	< 0.5 U	< 0.5 U	< 0.5 U	< 0.5 U	< 0.5 U	**7.3**
1,2,4-Trichlorobenzene	0.99	70	< 0.5 U	< 0.5 U	< 0.5 U	< 1 U	< 0.5 U	< 0.5 U	< 0.5 U	< 0.5 U	< 0.5 U	< 0.5 U	< 0.5 U	< 0.5 U	< 0.5 U	< 0.5 U	< 0.5 U	< 0.5 U
1,2-Dibromo-3-chloropropane (DBCP)	0.00032	0.2	< 0.5 U	< 0.5 U	< 0.5 U	< 1 U	< 0.5 U	< 0.5 U	< 0.5 U	< 0.5 U	< 0.5 U	< 0.5 U	< 0.5 U	< 0.5 U	< 0.5 U	< 0.5 U	< 0.5 U	< 0.5 U
1,2-Dibromoethane	0.0065	0.05	< 0.5 U	< 0.5 U	< 0.5 U	< 1 U	< 0.5 U	< 0.5 U	< 0.5 U	< 0.5 U	< 0.5 U	< 0.5 U	< 0.5 U	< 0.5 U	< 0.5 U	< 0.5 U	< 0.5 U	< 0.5 U
1,2-Dichlorobenzene	280	600	< 0.5 U	< 0.5 U	< 0.5 U	< 1 U	< 0.5 U	< 0.5 U	< 0.5 U	< 0.5 U	< 0.5 U	< 0.5 U	< 0.5 U	< 0.5 U	< 0.5 U	< 0.5 U	< 0.5 U	< 0.5 U
1,2-Dichloroethane	0.15	5	< 0.5 U	< 0.5 U	< 0.5 U	< 1 U	< 0.5 U	< 0.5 U	< 0.5 U	< 0.5 U	< 0.5 U	< 0.5 U	< 0.5 U	< 0.5 U	< 0.5 U	< 0.5 U	< 0.5 U	< 0.5 U
1,2-Dichloropropane	0.38	5	< 0.5 U	< 0.5 U	< 0.5 U	< 1 U	< 0.5 U	< 0.5 U	< 0.5 U	< 0.5 U	< 0.5 U	< 0.5 U	< 0.5 U	< 0.5 U	< 0.5 U	< 0.5 U	< 0.5 U	< 0.5 U
1,3-Dichlorobenzene			< 0.5 U	< 0.5 U	< 0.5 U	< 1 U	< 0.5 U	< 0.5 U	< 0.5 U	< 0.5 U	< 0.5 U	< 0.5 U	< 0.5 U	< 0.5 U	< 0.5 U	< 0.5 U	< 0.5 U	< 0.5 U
1,4-Dichlorobenzene	0.42	75	< 0.5 U	< 0.5 U	< 0.5 U	< 1 U	< 0.5 U	< 0.5 U	< 0.5 U	< 0.5 U	< 0.5 U	< 0.5 U	< 0.5 U	< 0.5 U	< 0.5 U	< 0.5 U	< 0.5 U	< 0.5 U
2-Butanone	4900		< 10 U	< 10 U	< 10 U	< 20 U	< 10 U	< 10 U	< 10 U	< 10 U	< 10 U	< 10 U	< 10 U	< 10 U	< 10 U	< 10 U	< 10 U	**49**
2-Hexanone	34		< 10 U	< 10 U	< 10 U	< 20 U	< 10 U	< 10 U	< 10 U	< 10 U	< 10 U	< 10 U	< 10 U	< 10 U	< 10 U	< 10 U	< 10 U	< 10 U
4-Methyl-2-pentanone	1000		< 10 U	< 10 U	< 10 U	< 20 U	< 10 U	< 10 U	< 10 U	< 10 U	< 10 U	< 10 U	< 10 U	< 10 U	< 10 U	< 10 U	< 10 U	< 10 U
Acetone	12000		6 UB	6.6 UB	8.3 UB	6.1 UB	**3.3 J**	**3.9 J**	**7.5 J**	**8.1 J**	**3.9 J**	**7.8 J**	**8 J**	**6.2 J**	6.7 UB	**8.8 J**	2.9 UB	**10**
Benzene	0.39	5	**0.14 J**	**0.32 J**	**0.14 J**	< 1 U	**0.12 J**	**0.18 J**	**0.22 J**	< 0.5 U	**0.12 J**	**0.12 J**	**0.14 J**	**0.17 J**	< 0.5 U	**0.13 J**	< 0.5 U	**0.66**
Benzene, 1-methylethyl	390		< 0.5 U	< 0.5 U	< 0.5 U	< 1 U	< 0.5 U	< 0.5 U	< 0.5 U	< 0.5 U	< 0.5 U	< 0.5 U	< 0.5 U	< 0.5 U	< 0.5 U	< 0.5 U	< 0.5 U	< 0.5 U
Bromodichloromethane	0.12	80	< 0.5 U	< 0.5 U	< 0.5 U	< 1 U	< 0.5 U	< 0.5 U	< 0.5 U	< 0.5 U	< 0.5 U	< 0.5 U	< 0.5 U	< 0.5 U	< 0.5 U	< 0.5 U	< 0.5 U	< 0.5 U
Bromoform	7.9	80	< 0.5 U	< 0.5 U	< 0.5 U	< 1 U	< 0.5 U	< 0.5 U	< 0.5 UJ	< 0.5 U	< 0.5 U	< 0.5 U	< 0.5 U	< 0.5 U	< 0.5 U	< 0.5 U	< 0.5 U	< 0.5 U
Bromomethane	7		< 0.5 U	< 0.5 U	< 0.5 U	< 1 UJ	< 0.5 U	< 0.5 U	< 0.5 UJ	< 0.5 U	< 0.5 U	< 0.5 U	< 0.5 U	< 0.5 U	< 0.5 U	< 0.5 U	< 0.5 U	< 0.5 U
Carbon disulfide	720		**0.37 J**	**0.16 J**	**0.8**	**0.23 J**	**0.28 J**	**0.56**	**0.37 J**	**0.12 J**	**0.27 J**	**0.26 J**	**0.55**	< 0.5 U	0.34 UB	1.5 UB	0.46 UB	0.4 UB
Carbon tetrachloride	0.39	5	< 0.5 U	< 0.5 U	< 0.5 U	< 1 U	< 0.5 U	< 0.5 U	< 0.5 U	< 0.5 U	< 0.5 U	< 0.5 U	< 0.5 U	< 0.5 U	< 0.5 U	< 0.5 U	< 0.5 U	< 0.5 U
CFC-11	1100		< 0.5 U	< 0.5 U	< 0.5 U	< 1 U	< 0.5 U	< 0.5 U	< 0.5 U	< 0.5 U	< 0.5 U	< 0.5 U	< 0.5 U	< 0.5 U	< 0.5 U	< 0.5 U	< 0.5 U	< 0.5 U
CFC-12	190		< 0.5 U	< 0.5 U	< 0.5 U	< 1 U	< 0.5 U	< 0.5 U	< 0.5 U	< 0.5 U	< 0.5 U	< 0.5 U	< 0.5 U	< 0.5 U	< 0.5 U	< 0.5 U	< 0.5 U	< 0.5 U
Chlorobenzene	72	100	< 0.5 U	< 0.5 U	< 0.5 U	< 1 U	< 0.5 U	< 0.5 U	< 0.5 U	< 0.5 U	< 0.5 U	< 0.5 U	< 0.5 U	< 0.5 U	< 0.5 U	< 0.5 U	< 0.5 U	< 0.5 U
Chloroethane	21000		< 0.5 U	< 0.5 U	< 0.5 U	< 1 U	< 0.5 U	< 0.5 U	< 0.5 U	< 0.5 U	< 0.5 U	< 0.5 U	< 0.5 U	< 0.5 U	< 0.5 U	< 0.5 U	< 0.5 U	< 0.5 U
Chloroform	0.19	80	< 0.5 U	< 0.5 U	< 0.5 U	< 1 U	< 0.5 U	< 0.5 U	< 0.5 U	< 0.5 U	< 0.5 U	< 0.5 U	< 0.5 U	< 0.5 U	< 0.5 U	< 0.5 U	< 0.5 U	< 0.5 U
Chloromethane	190		**0.27 J**	**0.2 J**	**0.18 J**	< 1 U	< 0.5 U	**0.34 J**	< 0.5 U	< 0.5 U	< 0.5 U	< 0.5 U	< 0.5 U	< 0.5 U	< 0.5 U	< 0.5 U	**0.26 J**	< 0.5 U
cis-1,2-Dichloroethene	28	70	< 0.5 U	**0.19 J**	**0.26 J**	< 1 U	**0.28 J**	**0.77**	**6.9**	< 0.5 U	**0.62**	**0.44 J**	**1.5**	< 0.5 U	< 0.5 U	< 0.5 U	**14**	**450**
cis-1,3-Dichloropropene			< 0.5 U	< 0.5 U	< 0.5 U	< 1 U	< 0.5 U	< 0.5 U	< 0.5 U	< 0.5 U	< 0.5 U	< 0.5 U	< 0.5 U	< 0.5 U	< 0.5 U	< 0.5 U	< 0.5 U	< 0.5 U
Cyclohexane	13000		< 0.5 U	< 0.5 U	< 0.5 U	< 1 U	< 0.5 U	< 0.5 U	< 0.5 U	< 0.5 U	< 0.5 U	< 0.5 U	< 0.5 U	< 0.5 U	< 0.5 U	< 0.5 U	< 0.5 U	< 0.5 U
Dibromochloromethane	0.15	80	< 0.5 U	< 0.5 U	< 0.5 U	< 1 U	< 0.5 U	< 0.5 U	< 0.5 U	< 0.5 U	< 0.5 U	< 0.5 U	< 0.5 U	< 0.5 U	< 0.5 U	< 0.5 U	< 0.5 U	< 0.5 U
Ethylbenzene	1.3	700	< 0.5 U	< 0.5 U	< 0.5 U	< 1 U	< 0.5 U	< 0.5 U	< 0.5 U	< 0.5 U	< 0.5 U	< 0.5 U	< 0.5 U	< 0.5 U	< 0.5 U	< 0.5 U	< 0.5 U	< 0.5 U
Methyl acetate	16000		< 1 U	< 1 U	< 1 U	< 2 U	< 1 U	< 1 U	< 1 U	< 1 U	< 1 U	< 1 U	< 1 U	< 1 U	< 1 U	< 1 U	< 1 U	< 1 U
Methylcyclohexane			< 5 U	< 5 U	< 5 U	< 10 U	< 5 U	< 5 U	< 5 U	< 5 U	< 5 U	< 5 U	< 5 U	< 5 U	< 5 U	< 5 U	< 5 U	< 5 U
Methylene chloride	9.9	5	0.23 UB	< 0.5 U	0.22 UB	0.66 UB	0.18 UB	0.21 UB	< 0.5 UJ	0.24 UB	0.2 UB	0.23 UB	0.2 UB	0.23 UB	0.22 UB	0.2 UB	0.19 UB	0.2 UB
Styrene	1100	100	< 0.5 U	< 0.5 U	< 0.5 U	< 1 U	< 0.5 U	< 0.5 U	< 0.5 UJ	< 0.5 U	< 0.5 U	< 0.5 U	< 0.5 U	< 0.5 U	< 0.5 U	< 0.5 U	< 0.5 U	< 0.5 U
tert-Butyl methyl ether	12		< 0.5 U	< 0.5 U	< 0.5 U	< 1 U	< 0.5 U	< 0.5 U	< 0.5 U	< 0.5 U	< 0.5 U	< 0.5 U	< 0.5 U	< 0.5 U	< 0.5 U	< 0.5 U	< 0.5 U	< 0.5 U
Tetrachloroethene	9.7	5	**0.13 J**	**2**	< 0.5 U	< 1 U	**1.9**	**13**	**5.4**	< 0.5 U	**2.8**	**6.9**	**11**	< 0.5 U	< 0.5 U	< 0.5 U	**0.69**	**140**
Toluene	860	1000	**0.17 J**	**0.38 J**	**0.23 J**	**0.45 J**	< 0.5 U	< 0.5 U	< 0.5 U	< 0.5 U	< 0.5 U	< 0.5 U	< 0.5 U	**0.23 J**	< 0.5 U	**0.17 J**	< 0.5 U	**0.39 J**
trans-1,2-Dichloroethene	86	100	< 0.5 U	< 0.5 U	< 0.5 U	< 1 U	< 0.5 U	< 0.5 U	< 0.5 U	< 0.5 U	< 0.5 U	< 0.5 U	< 0.5 U	< 0.5 U	< 0.5 U	< 0.5 U	**4.1**	**1.7**
trans-1,3-Dichloropropene			< 0.5 U	< 0.5 U	< 0.5 U	< 1 U	< 0.5 U	< 0.5 U	< 0.5 UJ	< 0.5 U	< 0.5 U	< 0.5 U	< 0.5 U	< 0.5 U	< 0.5 U	< 0.5 U	< 0.5 U	< 0.5 U
Trichloroethene	0.44	5	**1.9**	**1.7**	**0.23 J**	< 1 U	**7.4**	**14**	**29**	< 0.5 U	**12**	**7.7**	**15**	< 0.5 U	**0.19 J**	**0.12 J**	**8.8**	**1300**
Vinyl chloride	0.015	2	< 0.5 U	< 0.5 U	< 0.5 U	< 1 U	< 0.5 U	< 0.5 U	< 0.5 U	< 0.5 U	< 0.5 U	< 0.5 U	< 0.5 U	< 0.5 U	< 0.5 U	< 0.5 U	< 0.5 U	0.6 UB
Xylenes (total)	190	10000	< 0.5 U	< 0.5 U	< 0.5 U	**0.48 J**	< 0.5 U	< 0.5 U	< 0.5 U	< 0.5 U	< 0.5 U	< 0.5 U	< 0.5 U	< 0.5 U	< 0.5 U	< 0.5 U	< 0.5 U	< 0.5 U
SVOCs - USEPA Method SW8270 (µg/L)																		
1,1'-Biphenyl	0.83		< 1 U	< 1 U	< 10 UJ	< 10 R	< 1 U	< 10 U	< 1 R	< 1 U	< 1 U	< 1 U	< 1 U	< 1 UJ	< 1 U	< 1 U	< 1 U	< 1 UJ
2,4,5-Trichlorophenol	890		< 1 U	< 1 U	< 1 U	< 1 U	< 1 U	< 10 U	< 1 U	< 1 U	< 1 U	< 1 U	< 1 U	< 1 UJ	< 1 U	< 1 UJ	< 1 U	< 1 UJ
2,4,6-Trichlorophenol	3.5		< 1 U	< 1 U	< 1 U	< 1 U	< 1 U	< 10 U	< 1 U	< 1 U	< 1 U	< 1 U	< 1 U	< 1 UJ	< 1 U	< 1 U	< 1 U	< 1 UJ
2,4-Dichlorophenol	35		< 1 U	< 1 U	< 1 U	< 1 U	< 1 U	< 10 U	< 1 U	< 1 U	< 1 U	< 1 U	< 1 U	< 1 UJ	< 1 U	< 1 U	< 1 U	< 1 UJ
2,4-Dimethylphenol	270		< 1 U	< 1 U	< 1 U	< 1 U	< 1 U	< 10 U	< 1 U	< 1 U	< 1 U	< 1 U	< 1 U	< 1 UJ	< 1 U	< 1 U	< 1 U	< 1 UJ
2,4-Dinitrophenol	30		< 5.1 U	< 5.1 U	< 5.1 U	< 5.1 U	< 5.1 U	< 50 U	< 5.1 U	< 5.1 U	< 5.1 U	< 5.1 U	< 5.1 U	< 5.1 UJ	< 5.1 U	< 5.1 U	< 5.1 U	< 5.1 UJ
2,4-Dinitrotoluene	0.2		< 2 U	< 2 U	< 20 UJ	< 20 R	< 2 U	< 20 U	< 2 R	< 2 U	< 2 U	< 2 U	< 2 U	< 2 UJ	< 2 U	< 2 UJ	< 2 U	< 2 UJ
2,6-Dinitrotoluene	15		< 2 U	< 2 U	< 20 UJ	< 20 R	< 2 U	< 20 U	< 2 R	< 2 U	< 2 U	< 2 U	< 2 U	< 2 UJ	< 2 U	< 2 UJ	< 2 U	< 2 UJ
2-Chloronaphthalene	550		< 1 U	< 1 U	< 10 UJ	< 10 R	< 1 U	< 10 U	< 1 R	< 1 U	< 1 U	< 1 U	< 1 U	< 1 UJ	< 1 U	< 1 UJ	< 1 U	< 1 UJ
2-Chlorophenol	71		< 1 U	< 1 U	< 1 U	< 1 U	< 1 U	< 10 U	< 1 U	< 1 U	< 1 U	< 1 U	< 1 U	< 1 UJ	< 1 U	< 1 U	< 1 U	< 1 UJ
2-Methyl-4,6-dinitrophenol	1.2		< 5.1 U	< 5.1 U	< 5.1 U	< 5.1 U	< 5.1 U	< 50 U	< 5.1 U	< 5.1 U	< 5.1 U	< 5.1 U	< 5.1 U	< 5.1 UJ	< 5.1 U	< 5.1 U	< 5.1 U	< 5.1 UJ
2-Methylnaphthalene	27		< 1 U	< 1 U	< 10 UJ	< 10 R	< 1 U	< 10 U	< 1 R	< 1 U	< 1 U	< 1 U	< 1 U	< 1 UJ	< 1 U	< 1 UJ	< 1 U	< 1 UJ
2-Methylphenol	720		< 1 U	< 1 U	**1.3**	< 1 U	< 1 U	< 10 U	< 1 U	< 1 U	< 1 U	< 1 U	< 1 U	< 1 UJ	< 1 U	< 1 U	< 1 U	< 1 UJ
2-Nitrobenzenamine	150		< 2 U	< 2 U	< 20 UJ	< 20 R	< 2 U	< 20 U	< 2 R	< 2 U	< 2 U	< 2 U	< 2 U	< 2 UJ	< 2 U	< 2 UJ	< 2 U	< 2 UJ
2-Nitrophenol			< 2 U	< 2 U	< 2 U	< 2 U	< 2 U	< 20 U	< 2 U	< 2 U	< 2 U	< 2 U	< 2 U	< 2 UJ	< 2 U	< 2 U	< 2 U	< 2 UJ
3,3'-Dichlorobenzidine	0.11		< 5.1 U	< 5.1 U	< 50 UJ	< 50 R	< 5.1 U	< 50 U	< 5.1 R	< 5.1 U	< 5.1 U	< 5.1 U	< 5.1 U	< 5.1 UJ	< 5.1 U	< 5.1 U	< 5.1 U	< 5.1 UJ
3-Nitrobenzenamine			< 2 U	< 2 U	< 20 UJ	< 20 R	< 2 U	< 20 U	< 2 R	< 2 U	< 2 U	< 2 U	< 2 U	< 2 UJ	< 2 U	< 2 R	< 2 U	< 2 UJ
4-Bromophenyl phenyl ether			< 1 UJ	< 1 U	< 10 UJ	< 10 R	< 1 U	< 10 U	< 1 R	< 1 U	< 1 U	< 1 U	< 1 U	< 1 UJ	< 1 U	< 1 UJ	< 1 U	< 1 UJ
4-Chloro-3-methylphenol	1100		< 1 U	< 1 U	< 1 U	< 1 U	< 1 U	< 10 U	< 1 U	< 1 U	< 1 U	< 1 U	< 1 U	< 1 UJ	< 1 U	< 1 UJ	< 1 U	< 1 UJ
4-Chlorobenzenamine	0.32		< 1 U	< 1 U	< 10 UJ	< 10 R	< 1 U	< 10 U	< 1 R	< 1 U	< 1 U	< 1 U	< 1 U	< 1 UJ	< 1 U	< 1 R	< 1 U	< 1 UJ
4-Chlorophenyl phenyl ether			< 1 U	< 1 U	< 10 UJ	< 10 R	< 1 U	< 10 U	< 1 R	< 1 U	< 1 U	< 1 U	< 1 U	< 1 UJ	< 1 U	< 1 UJ	< 1 U	< 1 UJ
4-Methylphenol	1400		< 2 U	< 2 U	**1.2 J**	< 2 U	< 2 U	< 20 U	< 2 U	< 2 U	< 2 U	< 2 U	< 2 U	< 2 UJ	< 2 U	< 2 U	< 2 U	< 2 UJ
4-Nitrobenzenamine	3.3		< 2 U	< 2 U	< 20 UJ	< 20 R	< 2 U	< 20 U	< 2 R	< 2 U	< 2 U	< 2 U	< 2 U	< 2 UJ	< 2 U	< 2 R	< 2 U	< 2 UJ

Footnotes appear on last page

Table 4-4
March through September 2010 Vertical Aquifer Profile Groundwater Data
SWMU 39
Fort Stewart, Georgia

		Location ID	F39TW08	F39TW08	F39TW08	F39TW08	F39TW09	F39TW09	F39TW09	F39TW09	F39TW10	F39TW10	F39TW10	F39TW10	F39TW11	F39TW11	F39TW11	F39TW11
		Depth (ft bgs)	10-15	20-25	30-35	40-45	10-15	20-25	30-35	40-45	10-15	20-25	30-35	40-45	10-15	20-25	30-35	40-45
		Sample Date	4/8/2010	4/8/2010	4/8/2010	4/8/2010	4/12/2010	4/12/2010	4/12/2010	4/12/2010	4/13/2010	4/13/2010	4/13/2010	4/13/2010	4/14/2010	4/14/2010	4/14/2010	4/14/2010
Chemical Name	Tap Water RSL[1]	MCL[2]																
SVOCs continued - USEPA Method SW8270 (µg/L)																		
4-Nitrophenol			< 5.1 U	< 5.1 U	< 5.1 U	< 5.1 U	< 5.1 U	< 50 U	< 5.1 U	< 5.1 U	< 5.1 U	< 5.1 U	< 5.1 U	< 5.1 UJ	< 5.1 U	< 5.1 U	< 5.1 U	< 5.1 UJ
Acenaphthene	400		< 1 UJ	< 1 U	< 10 UJ	< 10 R	< 1 U	< 10 U	< 1 R	< 1 U	< 1 U	< 1 U	< 1 U	< 1 UJ	< 1 U	< 1 U	< 1 U	< 1 UJ
Acenaphthylene			< 1 U	< 1 U	< 10 UJ	< 10 R	< 1 U	< 10 U	< 1 R	< 1 U	< 1 U	< 1 U	< 1 U	< 1 UJ	< 1 U	< 1 U	< 1 U	< 1 UJ
Acetophenone	1500		< 1 U	< 1 U	< 10 UJ	< 10 R	< 1 U	< 10 U	< 1 R	< 1 U	< 1 U	< 1 U	< 1 U	< 1 UJ	< 1 U	< 1 U	< 1 U	< 1 UJ
Anthracene	1300		< 1 UJ	< 1 U	< 10 UJ	< 10 R	< 1 U	< 10 U	< 1 R	< 1 U	< 1 U	< 1 U	< 1 U	< 1 UJ	< 1 U	< 1 UJ	< 1 U	< 1 UJ
Atrazine	0.26	3	< 1 U	< 1 U	< 10 UJ	< 10 R	< 1 U	< 10 U	< 1 R	< 1 U	< 1 U	< 1 U	< 1 U	< 1 UJ	< 1 U	< 1 U	< 1 U	< 1 UJ
Benz(a)anthracene	0.029		< 1 UJ	< 1 U	< 10 UJ	< 10 R	< 1 U	< 10 U	< 1 R	< 1 U	< 1 U	< 1 U	< 1 U	< 1 UJ	< 1 U	< 1 UJ	< 1 U	< 1 UJ
Benzaldehyde	1500		< 5.1 U	< 5.1 U	< 50 UJ	< 50 R	< 5.1 U	< 50 U	< 5.1 R	< 5.1 U	< 5.1 U	< 5.1 U	< 5.1 U	< 5.1 UJ	< 5.1 U	< 5.1 U	< 5.1 U	< 5.1 UJ
Benzo(a)pyrene	0.0029	0.2	< 1 UJ	< 1 U	< 10 UJ	< 10 R	< 1 U	< 10 U	< 1 R	< 1 U	< 1 U	< 1 U	< 1 U	< 1 UJ	< 1 U	< 1 U	< 1 U	< 1 UJ
Benzo(b)fluoranthene	0.029		< 1 UJ	< 1 U	< 10 UJ	< 10 R	< 1 U	< 10 U	< 1 R	< 1 U	< 1 U	< 1 U	< 1 U	< 1 UJ	< 1 U	< 1 U	< 1 U	< 1 UJ
Benzo(ghi)perylene			< 1 UJ	< 1 U	< 10 UJ	< 10 R	< 1 U	< 10 U	< 1 R	< 1 U	< 1 U	< 1 U	< 1 U	< 1 UJ	< 1 U	< 1 UJ	< 1 U	< 1 UJ
Benzo(k)fluoranthene	0.29		< 1 U	< 1 U	< 10 UJ	< 10 R	< 1 U	< 10 U	< 1 R	< 1 U	< 1 U	< 1 U	< 1 U	< 1 UJ	< 1 U	< 1 U	< 1 U	< 1 UJ
Bis(2-chloroethoxy)methane	46		< 1 U	< 1 U	< 10 UJ	< 10 R	< 1 U	< 10 U	< 1 R	< 1 U	< 1 U	< 1 U	< 1 U	< 1 UJ	< 1 U	< 1 UJ	< 1 U	< 1 UJ
Bis(2-chloroethyl) ether	0.012		< 1 U	< 1 U	< 10 UJ	< 10 R	< 1 U	< 10 U	< 1 R	< 1 U	< 1 U	< 1 U	< 1 U	< 1 UJ	< 1 U	< 1 U	< 1 U	< 1 UJ
Bis(2-chloroisopropyl) ether	0.31		< 1 U	< 1 U	< 10 UJ	< 10 R	< 1 U	< 10 U	< 1 R	< 1 U	< 1 U	< 1 U	< 1 U	< 1 UJ	< 1 U	< 1 U	< 1 U	< 1 UJ
Bis(2-ethylhexyl)phthalate	4.8	6	< 5.1 U	< 5.1 U	< 50 UJ	< 50 R	< 5.1 U	< 50 U	< 5.1 R	< 5.1 U	< 5.1 U	< 5.1 U	< 5.1 U	< 5.1 UJ	< 5.1 U	< 5.1 R	< 5.1 U	< 5.1 UJ
Butyl benzyl phthalate	14		< 5.1 UJ	< 5.1 U	< 50 UJ	< 50 R	< 5.1 U	< 50 U	< 5.1 R	< 5.1 U	< 5.1 U	< 5.1 U	< 5.1 U	< 5.1 UJ	< 5.1 U	< 5.1 UJ	< 5.1 U	< 5.1 UJ
Caprolactam	7700		< 5.1 U	< 5.1 U	< 50 UJ	< 50 R	< 5.1 U	< 50 U	< 5.1 R	< 5.1 U	< 5.1 U	< 5.1 U	< 5.1 U	< 5.1 UJ	< 5.1 U	< 5.1 U	< 5.1 U	< 5.1 UJ
Carbazole			< 1 U	< 1 U	< 10 UJ	< 10 R	< 1 U	< 10 U	< 1 R	< 1 U	< 1 U	< 1 U	< 1 U	< 1 UJ	< 1 U	< 1 UJ	< 1 U	< 1 UJ
Chrysene	2.9		< 1 UJ	< 1 U	< 10 UJ	< 10 R	< 1 U	< 10 U	< 1 R	< 1 U	< 1 U	< 1 U	< 1 U	< 1 UJ	< 1 U	< 1 UJ	< 1 U	< 1 UJ
Dibenz(a,h)anthracene	0.0029		< 1 UJ	< 1 U	< 10 UJ	< 10 R	< 1 U	< 10 U	< 1 R	< 1 U	< 1 U	< 1 U	< 1 U	< 1 UJ	< 1 U	< 1 UJ	< 1 U	< 1 UJ
Dibenzofuran	5.8		< 1 U	< 1 U	< 10 UJ	< 10 R	< 1 U	< 10 U	< 1 R	< 1 U	< 1 U	< 1 U	< 1 U	< 1 UJ	< 1 U	< 1 UJ	< 1 U	< 1 UJ
Diethyl phthalate	11000		< 5.1 U	< 5.1 U	< 50 UJ	< 50 R	< 5.1 U	< 50 U	< 5.1 R	< 5.1 U	< 5.1 U	< 5.1 U	< 5.1 U	< 5.1 UJ	< 5.1 U	< 5.1 UJ	< 5.1 U	< 5.1 UJ
Dimethyl phthalate			< 5.1 U	< 5.1 U	< 50 UJ	< 50 R	< 5.1 U	< 50 U	< 5.1 R	< 5.1 U	< 5.1 U	< 5.1 U	< 5.1 U	< 5.1 UJ	< 5.1 U	< 5.1 UJ	< 5.1 U	< 5.1 UJ
Di-n-butyl phthalate	670		< 5.1 U	< 5.1 U	< 50 UJ	< 50 R	< 5.1 U	< 50 U	< 5.1 R	< 5.1 U	< 5.1 U	< 5.1 U	< 5.1 U	< 5.1 UJ	< 5.1 U	< 5.1 UJ	< 5.1 U	< 5.1 UJ
Di-n-octylphthalate	190		< 5.1 U	< 5.1 U	< 50 UJ	< 50 R	< 5.1 U	< 50 U	< 5.1 R	< 5.1 U	< 5.1 U	< 5.1 U	< 5.1 U	< 5.1 UJ	< 5.1 U	< 5.1 UJ	< 5.1 U	< 5.1 UJ
Fluoranthene	630		< 1 UJ	< 1 U	< 10 UJ	< 10 R	< 1 U	< 10 U	< 1 R	< 1 U	< 1 U	< 1 U	< 1 U	< 1 UJ	< 1 U	< 1 UJ	< 1 U	< 1 UJ
Fluorene	220		< 1 U	< 1 U	< 10 UJ	< 10 R	< 1 U	< 10 U	< 1 R	< 1 U	< 1 U	< 1 U	< 1 U	< 1 UJ	< 1 U	< 1 UJ	< 1 U	< 1 UJ
Hexachlorobenzene	0.042	1	< 1 U	< 1 U	< 10 UJ	< 10 R	< 1 U	< 10 U	< 1 R	< 1 U	< 1 U	< 1 U	< 1 U	< 1 UJ	< 1 U	< 1 UJ	< 1 U	< 1 UJ
Hexachlorobutadiene	0.26		< 1 U	< 1 U	< 10 UJ	< 10 R	< 1 U	< 10 U	< 1 R	< 1 U	< 1 U	< 1 U	< 1 U	< 1 UJ	< 1 U	< 1 UJ	< 1 U	< 1 UJ
Hexachlorocyclopentadiene	22	50	< 5.1 U	< 5.1 U	< 50 UJ	< 50 R	< 5.1 U	< 50 U	< 5.1 R	< 5.1 U	< 5.1 U	< 5.1 U	< 5.1 U	< 5.1 UJ	< 5.1 U	< 5.1 U	< 5.1 U	< 5.1 UJ
Hexachloroethane	0.79		< 1 U	< 1 U	< 10 UJ	< 10 R	< 1 U	< 10 U	< 1 R	< 1 U	< 1 U	< 1 U	< 1 U	< 1 UJ	< 1 U	< 1 UJ	< 1 U	< 1 UJ
Indeno(1,2,3-cd)pyrene	0.029		< 1 UJ	< 1 U	< 10 UJ	< 10 R	< 1 U	< 10 U	< 1 R	< 1 U	< 1 U	< 1 U	< 1 U	< 1 UJ	< 1 U	< 1 UJ	< 1 U	< 1 UJ
Isophorone	67		< 1 U	< 1 U	< 10 UJ	< 10 R	< 1 U	< 10 U	< 1 R	< 1 U	< 1 U	< 1 U	< 1 U	< 1 UJ	< 1 U	< 1 UJ	< 1 U	< 1 UJ
Naphthalene	0.14		< 1 U	< 1 U	< 10 UJ	< 10 R	< 1 U	< 10 U	< 1 R	< 1 U	< 1 U	< 1 U	< 1 U	< 1 UJ	< 1 U	< 1 UJ	< 1 U	< 1 UJ
Nitrobenzene	0.12		< 1 U	< 1 U	< 10 UJ	< 10 R	< 1 U	< 10 U	< 1 R	< 1 U	< 1 U	< 1 U	< 1 U	< 1 UJ	< 1 U	< 1 UJ	< 1 U	< 1 UJ
N-Nitroso-di-n-propylamine	0.0093		< 1 U	< 1 U	< 10 UJ	< 10 R	< 1 U	< 10 U	< 1 R	< 1 U	< 1 U	< 1 U	< 1 U	< 1 UJ	< 1 U	< 1 U	< 1 U	< 1 UJ
N-Nitrosodiphenylamine	10		< 1 U	< 1 U	< 10 UJ	< 10 R	< 1 U	< 10 U	< 1 R	< 1 U	< 1 U	< 1 U	< 1 U	< 1 UJ	< 1 U	< 1 R	< 1 U	< 1 UJ
Pentachlorophenol	0.035	1	< 5.1 U	< 5.1 U	< 5.1 U	< 5.1 U	< 5.1 U	< 50 U	< 5.1 U	< 5.1 U	< 5.1 U	< 5.1 U	< 5.1 U	< 5.1 UJ	< 5.1 U	< 5.1 U	< 5.1 U	< 5.1 UJ
Phenanthrene			< 1 UJ	< 1 U	< 10 UJ	< 10 R	< 1 U	< 10 U	< 1 R	< 1 U	< 1 U	< 1 U	< 1 U	< 1 UJ	< 1 U	< 1 UJ	< 1 U	< 1 UJ
Phenol	4500		< 1 U	< 1 U	**2.4**	< 1 U	< 1 U	< 10 U	< 1 U	< 1 U	< 1 U	< 1 U	< 1 U	< 1 UJ	< 1 U	**1.2**	< 1 U	< 1 UJ
Pyrene	87		< 1 UJ	< 1 U	< 10 UJ	< 10 R	< 1 U	< 10 U	< 1 R	< 1 U	< 1 U	< 1 U	< 1 U	< 1 UJ	< 1 U	< 1 UJ	< 1 U	< 1 UJ

Footnotes appear on last page

Table 4-4
March through September 2010 Vertical Aquifer Profile Groundwater Data
SWMU 39
Fort Stewart, Georgia

		Location ID	F39TW12	F39TW12	F39TW12	F39TW12	F39TW13	F39TW13	F39TW13	F39TW13-DUP	F39TW13	F39TW13
		Depth (ft bgs)	10-15	20-25	30-35	40-45	30-35	35-40	40-45	40-45	45-50	50-55
		Sample Date	4/14/2010	4/14/2010	4/14/2010	4/14/2010	9/15/2010	9/15/2010	9/15/2010	9/15/2010	9/15/2010	9/15/2010
Chemical Name	Tap Water RSL[1]	MCL[2]										
VOCs - USEPA Method SW8260 (µg/L)												
1,1,1-Trichloroethane	7500	200	< 0.5 U	< 0.5 U	< 0.5 U	< 0.5 U	< 0.5 U	< 2.5 U	< 0.5 U	< 0.5 U	< 0.5 U	< 0.5 U
1,1,2,2-Tetrachloroethane	0.066		< 0.5 U	< 0.5 U	< 0.5 U	< 0.5 U	< 0.5 U	< 2.5 U	< 0.5 U	< 0.5 U	< 0.5 U	< 0.5 U
1,1,2-Trichloro-1,2,2-Trifluoroethane	53000		< 0.5 U	< 0.5 U	< 0.5 U	< 0.5 U	< 0.5 U	< 2.5 U	< 0.5 U	< 0.5 U	< 0.5 U	< 0.5 U
1,1,2-Trichloroethane	0.24	5	< 0.5 U	< 0.5 U	< 0.5 U	< 0.5 U	< 0.5 U	< 2.5 U	< 0.5 U	< 0.5 U	< 0.5 U	< 0.5 U
1,1-Dichloroethane	2.4		< 0.5 U	< 0.5 U	< 0.5 U	< 0.5 U	< 0.5 U	< 2.5 U	< 0.5 U	< 0.5 U	< 0.5 U	< 0.5 U
1,1-Dichloroethene	260	7	< 0.5 U	**0.12 J**	< 0.5 U	< 0.5 U	< 0.5 U	**3.9**	< 0.5 U	**0.89**	< 0.5 U	< 0.5 U
1,2,4-Trichlorobenzene	0.99	70	< 0.5 U	< 0.5 U	< 0.5 U	< 0.5 U	< 0.5 U	< 2.5 U	< 0.5 U	< 0.5 U	< 0.5 U	< 0.5 U
1,2-Dibromo-3-chloropropane (DBCP)	0.00032	0.2	< 0.5 U	< 0.5 U	< 0.5 U	< 0.5 U	< 0.5 U	< 2.5 U	< 0.5 U	< 0.5 U	< 0.5 U	< 0.5 U
1,2-Dibromoethane	0.0065	0.05	< 0.5 U	< 0.5 U	< 0.5 U	< 0.5 U	< 0.5 U	< 2.5 U	< 0.5 U	< 0.5 U	< 0.5 U	< 0.5 U
1,2-Dichlorobenzene	280	600	< 0.5 U	< 0.5 U	< 0.5 U	< 0.5 U	< 0.5 U	< 2.5 U	< 0.5 U	< 0.5 U	< 0.5 U	< 0.5 U
1,2-Dichloroethane	0.15	5	< 0.5 U	< 0.5 U	< 0.5 U	< 0.5 U	< 0.5 U	< 2.5 U	< 0.5 U	< 0.5 U	< 0.5 U	< 0.5 U
1,2-Dichloropropane	0.38	5	< 0.5 U	< 0.5 U	< 0.5 U	< 0.5 U	< 0.5 U	< 2.5 U	< 0.5 U	< 0.5 U	< 0.5 U	< 0.5 U
1,3-Dichlorobenzene			< 0.5 U	< 0.5 U	< 0.5 U	< 0.5 U	< 0.5 U	< 2.5 U	< 0.5 U	< 0.5 U	< 0.5 U	< 0.5 U
1,4-Dichlorobenzene	0.42	75	< 0.5 U	< 0.5 U	< 0.5 U	< 0.5 U	< 0.5 U	< 2.5 U	< 0.5 U	< 0.5 U	< 0.5 U	< 0.5 U
2-Butanone	4900		< 10 U	< 10 U	< 10 U	< 10 U	< 10 U	< 50 U	< 10 U	< 10 U	< 10 U	< 10 U
2-Hexanone	34		< 10 U	< 10 U	< 10 U	< 10 U	< 10 U	< 50 U	< 10 U	< 10 U	< 10 U	< 10 U
4-Methyl-2-pentanone	1000		< 10 U	< 10 U	< 10 U	< 10 U	< 10 U	< 50 U	< 10 U	< 10 U	< 10 U	< 10 U
Acetone	12000		3.6 UB	4.8 UB	3.5 UB	7.2 UB	< 10 U	< 50 U	10 UB	< 10 U	**22**	< 10 U
Benzene	0.39	5	**0.19 J**	**0.57**	< 0.5 U	< 0.5 U	< 0.5 U	< 2.5 U	**0.53**	**0.45 J**	**0.42 J**	**0.35 J**
Benzene, 1-methylethyl	390		< 0.5 U	< 0.5 U	< 0.5 U	< 0.5 U	< 0.5 U	< 2.5 U	< 0.5 U	< 0.5 U	< 0.5 U	< 0.5 U
Bromodichloromethane	0.12	80	< 0.5 U	< 0.5 U	< 0.5 U	< 0.5 U	< 0.5 U	< 2.5 U	< 0.5 U	< 0.5 U	< 0.5 U	< 0.5 U
Bromoform	7.9	80	< 0.5 U	< 0.5 U	< 0.5 U	< 0.5 U	< 0.5 U	< 2.5 U	< 0.5 U	< 0.5 U	< 0.5 U	< 0.5 U
Bromomethane	7		< 0.5 U	< 0.5 U	< 0.5 U	< 0.5 U	< 0.5 UJ	< 2.5 UJ	< 0.5 UJ	< 0.5 UJ	< 0.5 UJ	< 0.5 UJ
Carbon disulfide	720		0.24 UB	0.45 UB	0.19 UB	0.19 UB	< 0.5 U	< 2.5 U	< 0.5 U	< 0.5 U	< 0.5 U	< 0.5 U
Carbon tetrachloride	0.39	5	< 0.5 U	< 0.5 U	< 0.5 U	< 0.5 U	< 0.5 U	< 2.5 U	< 0.5 U	< 0.5 U	< 0.5 U	< 0.5 U
CFC-11	1100		< 0.5 U	< 0.5 U	< 0.5 U	< 0.5 U	< 0.5 U	< 2.5 U	< 0.5 U	< 0.5 U	< 0.5 U	< 0.5 U
CFC-12	190		< 0.5 U	< 0.5 U	< 0.5 U	< 0.5 U	< 0.5 U	< 2.5 U	< 0.5 U	< 0.5 U	< 0.5 U	< 0.5 U
Chlorobenzene	72	100	< 0.5 U	< 0.5 U	< 0.5 U	< 0.5 U	< 0.5 U	< 2.5 U	< 0.5 U	< 0.5 U	< 0.5 U	< 0.5 U
Chloroethane	21000		< 0.5 U	< 0.5 U	< 0.5 U	< 0.5 U	< 0.5 U	< 2.5 U	< 0.5 U	< 0.5 U	< 0.5 U	< 0.5 U
Chloroform	0.19	80	< 0.5 U	< 0.5 U	< 0.5 U	< 0.5 U	< 0.5 U	< 2.5 U	< 0.5 U	< 0.5 U	< 0.5 U	< 0.5 U
Chloromethane	190		< 0.5 U	< 0.5 U	< 0.5 U	< 0.5 U	< 0.5 U	< 2.5 U	< 0.5 U	< 0.5 U	< 0.5 U	**0.77**
cis-1,2-Dichloroethene	28	70	**3.1**	**3.3**	**0.2 J**	< 0.5 U	< 0.5 U	**320**	**76**	**80**	**0.94**	**0.29 J**
cis-1,3-Dichloropropene			< 0.5 U	< 0.5 U	< 0.5 U	< 0.5 U	< 0.5 U	< 2.5 U	< 0.5 U	< 0.5 U	< 0.5 U	< 0.5 U
Cyclohexane	13000		< 0.5 U	< 0.5 U	< 0.5 U	< 0.5 U	< 0.5 U	< 2.5 U	< 0.5 U	< 0.5 U	< 0.5 U	< 0.5 U
Dibromochloromethane	0.15	80	< 0.5 U	< 0.5 U	< 0.5 U	< 0.5 U	< 0.5 U	< 2.5 U	< 0.5 U	< 0.5 U	< 0.5 U	< 0.5 U
Ethylbenzene	1.3	700	< 0.5 U	< 0.5 U	< 0.5 U	< 0.5 U	< 0.5 U	< 2.5 U	< 0.5 U	< 0.5 U	< 0.5 U	< 0.5 U
Methyl acetate	16000		< 1 U	< 1 U	< 1 U	< 1 U	< 1 U	< 5 U	< 1 U	< 1 U	< 1 U	< 1 U
Methylcyclohexane			< 5 U	< 5 U	< 5 U	< 5 U	< 5 U	< 25 U	< 5 U	< 5 U	< 5 U	< 5 U
Methylene chloride	9.9	5	< 0.5 U	< 0.5 U	< 0.5 U	< 0.5 U	< 0.5 U	< 2.5 U	< 0.5 U	< 0.5 U	< 0.5 U	< 0.5 U
Styrene	1100	100	< 0.5 U	< 0.5 U	< 0.5 U	< 0.5 U	< 0.5 U	< 2.5 U	< 0.5 U	< 0.5 U	< 0.5 U	< 0.5 U
tert-Butyl methyl ether	12		< 0.5 U	< 0.5 U	< 0.5 U	< 0.5 U	< 0.5 U	< 2.5 U	< 0.5 U	< 0.5 U	< 0.5 U	< 0.5 U
Tetrachloroethene	9.7	5	**1.6**	**20**	< 0.5 U	< 0.5 U	< 0.5 U	**210**	**1.5**	**1.8**	< 0.5 U	< 0.5 U
Toluene	860	1000	< 0.5 U	< 0.5 U	< 0.5 U	< 0.5 U	< 0.5 U	**1.2 J**	**0.61**	**0.55**	**0.53**	**0.43 J**
trans-1,2-Dichloroethene	86	100	**0.86**	**0.5**	< 0.5 U	< 0.5 U	< 0.5 U	**1.2 J**	< 0.5 U	< 0.5 U	< 0.5 U	< 0.5 U
trans-1,3-Dichloropropene			< 0.5 U	< 0.5 U	< 0.5 U	< 0.5 U	< 0.5 U	< 2.5 U	< 0.5 U	< 0.5 U	< 0.5 U	< 0.5 U
Trichloroethene	0.44	5	**13**	**25**	**0.1 J**	< 0.5 U	**0.46 J**	**1200**	**74**	**87**	**1.3**	< 0.5 U
Vinyl chloride	0.015	2	< 0.5 U	< 0.5 U	< 0.5 U	< 0.5 U	< 0.5 U	< 2.5 U	< 0.5 U	< 0.5 U	< 0.5 U	< 0.5 U
Xylenes (total)	190	10000	< 0.5 U	< 0.5 U	< 0.5 U	< 0.5 U	< 0.5 U	< 2.5 U	< 0.5 U	< 0.5 U	< 0.5 U	< 0.5 U
SVOCs - USEPA Method SW8270 (µg/L)												
1,1'-Biphenyl	0.83		< 1 U	< 1 U	< 1 U	< 1 R	NA	NA	NA	NA	NA	NA
2,4,5-Trichlorophenol	890		< 1 U	< 1 U	< 1 U	< 1 UJ	NA	NA	NA	NA	NA	NA
2,4,6-Trichlorophenol	3.5		< 1 U	< 1 U	< 1 U	< 1 UJ	NA	NA	NA	NA	NA	NA
2,4-Dichlorophenol	35		< 1 U	< 1 U	< 1 U	< 1 UJ	NA	NA	NA	NA	NA	NA
2,4-Dimethylphenol	270		< 1 U	< 1 U	< 1 U	< 1 UJ	NA	NA	NA	NA	NA	NA
2,4-Dinitrophenol	30		< 5.1 U	< 5.1 U	< 5.1 U	< 5.1 UJ	NA	NA	NA	NA	NA	NA
2,4-Dinitrotoluene	0.2		< 2 U	< 2 U	< 2 U	< 2 R	NA	NA	NA	NA	NA	NA
2,6-Dinitrotoluene	15		< 2 U	< 2 U	< 2 U	< 2 R	NA	NA	NA	NA	NA	NA
2-Chloronaphthalene	550		< 1 U	< 1 U	< 1 U	< 1 R	NA	NA	NA	NA	NA	NA
2-Chlorophenol	71		< 1 U	< 1 U	< 1 U	< 1 UJ	NA	NA	NA	NA	NA	NA
2-Methyl-4,6-dinitrophenol	1.2		< 5.1 U	< 5.1 U	< 5.1 U	< 5.1 UJ	NA	NA	NA	NA	NA	NA
2-Methylnaphthalene	27		< 1 U	< 1 U	< 1 U	< 1 R	NA	NA	NA	NA	NA	NA
2-Methylphenol	720		< 1 U	< 1 U	< 1 U	< 1 UJ	NA	NA	NA	NA	NA	NA
2-Nitrobenzenamine	150		< 2 U	< 2 U	< 2 U	< 2 R	NA	NA	NA	NA	NA	NA
2-Nitrophenol			< 2 U	< 2 U	< 2 U	< 2 UJ	NA	NA	NA	NA	NA	NA
3,3'-Dichlorobenzidine	0.11		< 5.1 U	< 5.1 U	< 5.1 U	< 5.1 R	NA	NA	NA	NA	NA	NA
3-Nitrobenzenamine			< 2 U	< 2 U	< 2 U	< 2 R	NA	NA	NA	NA	NA	NA
4-Bromophenyl phenyl ether			< 1 U	< 1 U	< 1 U	< 1 R	NA	NA	NA	NA	NA	NA
4-Chloro-3-methylphenol	1100		< 1 U	< 1 U	< 1 U	< 1 UJ	NA	NA	NA	NA	NA	NA
4-Chlorobenzenamine	0.32		< 1 U	< 1 U	< 1 U	< 1 R	NA	NA	NA	NA	NA	NA
4-Chlorophenyl phenyl ether			< 1 U	< 1 U	< 1 U	< 1 R	NA	NA	NA	NA	NA	NA
4-Methylphenol	1400		< 2 U	< 2 U	< 2 U	< 2 UJ	NA	NA	NA	NA	NA	NA
4-Nitrobenzenamine	3.3		< 2 U	< 2 U	< 2 U	< 2 R	NA	NA	NA	NA	NA	NA

Footnotes appear on last page

Table 4-4
March through September 2010 Vertical Aquifer Profile Groundwater Data
SWMU 39
Fort Stewart, Georgia

		Location ID	F39TW12	F39TW12	F39TW12	F39TW12	F39TW13	F39TW13	F39TW13	F39TW13-DUP	F39TW13	F39TW13
		Depth (ft bgs)	10-15	20-25	30-35	40-45	30-35	35-40	40-45	40-45	45-50	50-55
		Sample Date	4/14/2010	4/14/2010	4/14/2010	4/14/2010	9/15/2010	9/15/2010	9/15/2010	9/15/2010	9/15/2010	9/15/2010
Chemical Name	Tap Water RSL[1]	MCL[2]										
SVOCs continued - USEPA Method SW8270 (µg/L)												
4-Nitrophenol			< 5.1 U	< 5.1 U	< 5.1 U	< 5.1 UJ	NA	NA	NA	NA	NA	NA
Acenaphthene	400		< 1 U	< 1 U	< 1 U	< 1 R	NA	NA	NA	NA	NA	NA
Acenaphthylene			< 1 U	< 1 U	< 1 U	< 1 R	NA	NA	NA	NA	NA	NA
Acetophenone	1500		< 1 U	< 1 U	< 1 U	< 1 R	NA	NA	NA	NA	NA	NA
Anthracene	1300		< 1 U	< 1 U	< 1 U	< 1 R	NA	NA	NA	NA	NA	NA
Atrazine	0.26	3	< 1 U	< 1 U	< 1 U	< 1 R	NA	NA	NA	NA	NA	NA
Benz(a)anthracene	0.029		< 1 U	< 1 U	< 1 U	< 1 R	NA	NA	NA	NA	NA	NA
Benzaldehyde	1500		< 5.1 U	< 5.1 U	< 5.1 U	< 5.1 R	NA	NA	NA	NA	NA	NA
Benzo(a)pyrene	0.0029	0.2	< 1 U	< 1 U	< 1 U	< 1 R	NA	NA	NA	NA	NA	NA
Benzo(b)fluoranthene	0.029		< 1 U	< 1 U	< 1 U	< 1 R	NA	NA	NA	NA	NA	NA
Benzo(ghi)perylene			< 1 U	< 1 U	< 1 U	< 1 R	NA	NA	NA	NA	NA	NA
Benzo(k)fluoranthene	0.29		< 1 U	< 1 U	< 1 U	< 1 R	NA	NA	NA	NA	NA	NA
Bis(2-chloroethoxy)methane	46		< 1 U	< 1 U	< 1 U	< 1 R	NA	NA	NA	NA	NA	NA
Bis(2-chloroethyl) ether	0.012		< 1 U	< 1 U	< 1 U	< 1 R	NA	NA	NA	NA	NA	NA
Bis(2-chloroisopropyl) ether	0.31		< 1 U	< 1 U	< 1 U	< 1 R	NA	NA	NA	NA	NA	NA
Bis(2-ethylhexyl)phthalate	4.8	6	< 5.1 U	< 5.1 U	< 5.1 U	< 5.1 R	NA	NA	NA	NA	NA	NA
Butyl benzyl phthalate	14		< 5.1 U	< 5.1 U	< 5.1 U	< 5.1 R	NA	NA	NA	NA	NA	NA
Caprolactam	7700		< 5.1 U	< 5.1 U	< 5.1 U	< 5.1 R	NA	NA	NA	NA	NA	NA
Carbazole			< 1 U	< 1 U	< 1 U	< 1 R	NA	NA	NA	NA	NA	NA
Chrysene	2.9		< 1 U	< 1 U	< 1 U	< 1 R	NA	NA	NA	NA	NA	NA
Dibenz(a,h)anthracene	0.0029		< 1 U	< 1 U	< 1 U	< 1 R	NA	NA	NA	NA	NA	NA
Dibenzofuran	5.8		< 1 U	< 1 U	< 1 U	< 1 R	NA	NA	NA	NA	NA	NA
Diethyl phthalate	11000		< 5.1 U	< 5.1 U	< 5.1 U	< 5.1 R	NA	NA	NA	NA	NA	NA
Dimethyl phthalate			< 5.1 U	< 5.1 U	< 5.1 U	< 5.1 R	NA	NA	NA	NA	NA	NA
Di-n-butyl phthalate	670		< 5.1 U	< 5.1 U	< 5.1 U	< 5.1 R	NA	NA	NA	NA	NA	NA
Di-n-octylphthalate	190		< 5.1 U	< 5.1 U	< 5.1 U	< 5.1 R	NA	NA	NA	NA	NA	NA
Fluoranthene	630		< 1 U	< 1 U	< 1 U	< 1 R	NA	NA	NA	NA	NA	NA
Fluorene	220		< 1 U	< 1 U	< 1 U	< 1 R	NA	NA	NA	NA	NA	NA
Hexachlorobenzene	0.042	1	< 1 U	< 1 U	< 1 U	< 1 R	NA	NA	NA	NA	NA	NA
Hexachlorobutadiene	0.26		< 1 U	< 1 U	< 1 U	< 1 R	NA	NA	NA	NA	NA	NA
Hexachlorocyclopentadiene	22	50	< 5.1 U	< 5.1 U	< 5.1 U	< 5.1 R	NA	NA	NA	NA	NA	NA
Hexachloroethane	0.79		< 1 U	< 1 U	< 1 U	< 1 R	NA	NA	NA	NA	NA	NA
Indeno(1,2,3-cd)pyrene	0.029		< 1 U	< 1 U	< 1 U	< 1 R	NA	NA	NA	NA	NA	NA
Isophorone	67		< 1 U	< 1 U	< 1 U	< 1 R	NA	NA	NA	NA	NA	NA
Naphthalene	0.14		< 1 U	< 1 U	< 1 U	< 1 R	NA	NA	NA	NA	NA	NA
Nitrobenzene	0.12		< 1 U	< 1 U	< 1 U	< 1 R	NA	NA	NA	NA	NA	NA
N-Nitroso-di-n-propylamine	0.0093		< 1 U	< 1 U	< 1 U	< 1 R	NA	NA	NA	NA	NA	NA
N-Nitrosodiphenylamine	10		< 1 U	< 1 U	< 1 U	< 1 R	NA	NA	NA	NA	NA	NA
Pentachlorophenol	0.035	1	< 5.1 U	< 5.1 U	< 5.1 U	< 5.1 UJ	NA	NA	NA	NA	NA	NA
Phenanthrene			< 1 U	< 1 U	< 1 U	< 1 R	NA	NA	NA	NA	NA	NA
Phenol	4500		< 1 U	< 1 U	< 1 U	< 1 UJ	NA	NA	NA	NA	NA	NA
Pyrene	87		< 1 U	< 1 U	< 1 U	< 1 R	NA	NA	NA	NA	NA	NA

Notes:

[1]	U.S. EPA Regional Screening Level for tap water as of November 2012
[2]	U.S. EPA Maximum Contaminant Level as of November 2012
	Sample results were screened against the tap water RSL. If a tap water RSL was not available, the results were screened against the MCL.
	Exceedances of the screening criteria are shaded grey.
µg/L	Micrograms per liter.
J	Constituent concentration was estimated.
U	Not detected at laboratory detection limit
NA	Not analyzed.
B	Detected in method blank.
R	Data is rejected
ft bgs	feet below ground surface

Table 4-5
March/April 2010 Vertical Aquifer Profile Groundwater Field Parameters
SWMU-39
Fort Stewart, Georgia

Location ID	Depth Interval (feet bgs)	Temperature (^{o}C)	pH	Specific Conductance (µS/cm)	Dissolved Oxygen (mg/L)	Oxidation-Reduction Potential (mV)
TW-01 (10-15)	10-15	16.33	4.72	249	2.48	63.6
TW-01 (20-25)	20-25	20.27	4.24	379	3.24	13.9
TW-01 (30-35)	30-35	17.52	6.79	1,189	3.84	-24.8
TW-01 (40-45)	40-45	NM	NM	NM	NM	NM
TW-02 (10-15)	10-15	17.89	5.64	152	5.71	68.3
TW-02 (20-25)	20-25	21.81	5.23	93	2.95	-81.9
TW-02 (30-35)	30-35	23.23	4.54	671	5.21	12.1
TW-02 (40-45)	40-45	17.56	5.53	301	3.64	53.8
TW-03 (10-15)	10-15	18.95	5.09	96	2.72	8.1
TW-03 (20-25)	20-25	21.96	5.17	98	2.01	-16.2
TW-03 (30-35)	30-35	22.56	4.41	676	2.58	22.3
TW-03 (40-45)	40-45	22.02	5.79	86	2.12	-27.2
TW-04 (10-15)	10-15	14.22	4.56	171	2.69	67.5
TW-04 (20-25)	20-25	18.64	4.48	175	1.71	69.4
TW-04 (30-35)	30-35	20.33	6.05	312	1.49	-57.8
TW-04 (40-45)	40-45	17.32	6.14	148	1.38	-72.4
TW-05 (10-15)	10-15	25.69	3.93	404	4.19	108.3
TW-05 (20-25)	20-25	20.50	5.53	360	2.02	52.7
TW-05 (30-35)	30-35	19.49	4.45	624	0.92	18.5
TW-05 (40-45)	40-45	22.84	5.91	1197	1.45	-13.9
TW-06 (10-15)	10-15	25.74	5.05	181	0.55	73.7
TW-06 (20-25)	20-25	17.74	6.56	362	0.58	-151.9
TW-06 (30-35)	30-35	17.55	4.37	305	2.43	109.2
TW-06 (40-45)	40-45	25.97	5.43	87	0.39	-3.9
TW-07 (10-15)	10-15	27.90	4.47	104	0.69	53.2
TW-07 (20-25)	20-25	19.15	5.94	167	0.35	-89.3
TW-07 (30-35)	30-35	19.30	5.57	141	0.60	-12.9
TW-07 (40-45)	40-45	24.98	5.71	173	0.26	-39.1
TW-08 (10-15)	10-15	24.77	5.56	90	0.23	-364.5
TW-08 (20-25)	20-25	22.76	6.42	187	0.40	-443.8
TW-08 (30-35)	30-35	22.32	6.48	237	0.55	-392.3
TW-08 (40-45)	40-45	22.81	5.75	128	0.41	-412.8
TW-09 (10-15)	10-15	22.53	6.28	260	0.42	-44.1
TW-09 (20-25)	20-25	23.89	6.08	297	0.29	-130.4
TW-09 (30-35)	30-35	27.86	5.94	200	0.11	-89.2
TW-09 (40-45)	40-45	24.89	6.17	221	0.49	-91.8
TW-10 (10-15)	10-15	19.69	6.17	141	0.49	-48.6
TW-10 (20-25)	20-25	25.48	6.18	235	0.39	-82.1
TW-10 (30-35)	30-35	23.52	5.93	248	0.21	-330.5
TW-10 (40-45)	40-45	21.00	7.41	303	0.64	-114.6
TW-11 (10-15)	10-15	19.70	6.15	194	0.73	-95.2
TW-11 (20-25)	20-25	26.36	6.23	233	0.23	-153.9
TW-11 (30-35)	30-35	27.23	6.07	273	0.45	-117.9
TW-11 (40-45)	40-45	16.50	5.88	159	0.56	-25.0
TW-12 (10-15)	10-15	23.33	6.02	407	0.53	-67.9
TW-12 (20-25)	20-25	20.20	6.47	534	0.15	-63.8
TW-12 (30-35)	30-35	22.78	6.75	1057	0.24	-56.1
TW-12 (40-45)	40-45	25.50	6.75	442	0.32	-19.9

Notes:

feet bgs	feet below ground surface
^{o}C	Degrees Celcius
SU	Standard Units
µmhos/cm	Micromhos per centimeter
mg/L	Milligrams per Liter
mV	Millivolt
NM	Not Measured

Table 4-6
2010 and 2011 Soil Analytical Data
SWMU 39
Fort Stewart, Georgia

						Location ID	F39SB001	F39SB002	F39SB003	F39SB004	F39SB005	F39SB006	F39SB007	F39SB008	F39SB008-DUP	F39SB009	F39SB009	F39SB010	F39SB010	F39SB011	F39SB011	F39SB012
						Sample Date	3/15/2010	3/18/2010	3/15/2010	3/15/2010	3/15/2010	3/15/2010	3/15/2010	3/18/2010	3/18/2010	3/15/2010	3/15/2010	3/16/2010	3/16/2010	3/16/2010	3/16/2010	3/16/2010
						Depth (ft bls)	4.5-5.5	4-5	4-5	4-5	4-5	4-5	4-5	4-5	4-5	0.5-1	3-3.5	0.5-1	3-3.5	0.5-1	3-3.5	0.5-1
Chemical Name	Surface BK	Subsurface BK	Industrial Soil RSL	Resident Soil RSL	MCL based SSL	Risk based SSL																
VOCs - USEPA Method 8260 (mg/kg)																						
1,1,1-Trichloroethane			38000	8700	0.07	2.6	< 0.0045 U	< 0.0044 U	< 0.0045 U	< 0.0047 U	< 0.0047 U	< 0.0044 U	< 0.0047 U	< 0.0047 U	< 0.0047 U	< 0.0053 U	< 0.005 U	< 0.0049 U	< 0.0047 U	< 0.0044 U	< 0.0049 U	< 0.0045 U
1,1,2,2-Tetrachloroethane			2.8	0.56		0.000026	< 0.0045 U	< 0.0044 U	< 0.0045 U	< 0.0047 U	< 0.0047 U	< 0.0044 U	< 0.0047 U	< 0.0047 U	< 0.0047 U	< 0.0053 U	< 0.005 U	< 0.0049 U	< 0.0047 U	< 0.0044 U	< 0.0049 U	< 0.0045 U
1,1,2-Trichloro-1,2,2-Trifluoroethane			180000	43000		130	< 0.0045 U	< 0.0044 U	< 0.0045 U	< 0.0047 UJ	< 0.0047 U	< 0.0044 U	< 0.0047 UJ	< 0.0047 U	< 0.0047 U	< 0.0053 UJ	< 0.005 U	< 0.0049 UJ	< 0.0047 UJ	< 0.0044 UJ	< 0.0049 U	< 0.0045 UJ
1,1,2-Trichloroethane			5.3	1.1	0.0016	0.000077	< 0.0045 U	< 0.0044 U	< 0.0045 U	< 0.0047 U	< 0.0047 U	< 0.0044 U	< 0.0047 U	< 0.0047 U	< 0.0047 U	< 0.0053 U	< 0.005 U	< 0.0049 U	< 0.0047 U	< 0.0044 U	< 0.0049 U	< 0.0045 U
1,1-Dichloroethane			17	3.3		0.00068	< 0.0045 U	< 0.0044 U	< 0.0045 U	< 0.0047 U	< 0.0047 U	< 0.0044 U	< 0.0047 U	< 0.0047 U	< 0.0047 U	< 0.0053 U	< 0.005 U	< 0.0049 U	< 0.0047 U	< 0.0044 U	< 0.0049 U	< 0.0045 U
1,1-Dichloroethene			1100	240	0.0025	0.093	< 0.0045 U	< 0.0044 U	< 0.0045 U	< 0.0047 UJ	< 0.0047 U	< 0.0044 U	< 0.0047 UJ	< 0.0047 U	< 0.0047 U	< 0.0053 UJ	< 0.005 U	< 0.0049 UJ	< 0.0047 UJ	< 0.0044 UJ	< 0.0049 U	< 0.0045 UJ
1,2,4-Trichlorobenzene			99	22	0.2	0.0029	< 0.0045 U	< 0.0044 U	< 0.0045 U	< 0.0047 U	< 0.0047 U	< 0.0044 U	< 0.0047 U	< 0.0047 U	< 0.0047 U	< 0.0053 U	< 0.005 U	< 0.0049 U	< 0.0047 U	< 0.0044 U	< 0.0049 U	< 0.0045 U
1,2-Dibromo-3-chloropropane (DBCP)			0.069	0.0054	0.000086	0.00000014	< 0.0045 U	< 0.0044 U	< 0.0045 U	< 0.0047 U	< 0.0047 U	< 0.0044 U	< 0.0047 U	< 0.0047 U	< 0.0047 U	< 0.0053 U	< 0.005 U	< 0.0049 U	< 0.0047 U	< 0.0044 U	< 0.0049 U	< 0.0045 U
1,2-Dibromoethane			0.17	0.034	0.000014	0.0000018	< 0.0045 U	< 0.0044 U	< 0.0045 U	< 0.0047 U	< 0.0047 U	< 0.0044 U	< 0.0047 U	< 0.0047 U	< 0.0047 U	< 0.0053 U	< 0.005 U	< 0.0049 U	< 0.0047 U	< 0.0044 U	< 0.0049 U	< 0.0045 U
1,2-Dichlorobenzene			9800	1900	0.58	0.27	< 0.0045 U	< 0.0044 U	< 0.0045 U	< 0.0047 U	< 0.0047 U	< 0.0044 U	< 0.0047 U	< 0.0047 U	< 0.0047 U	< 0.0053 U	< 0.005 U	< 0.0049 U	< 0.0047 U	< 0.0044 U	< 0.0049 U	< 0.0045 U
1,2-Dichloroethane			2.2	0.43	0.0014	0.000042	< 0.0045 U	< 0.0044 U	< 0.0045 U	< 0.0047 U	< 0.0047 U	< 0.0044 U	< 0.0047 U	< 0.0047 U	< 0.0047 U	< 0.0053 U	< 0.005 U	< 0.0049 U	< 0.0047 U	< 0.0044 U	< 0.0049 U	< 0.0045 U
1,2-Dichloropropane			4.7	0.94	0.0017	0.00013	< 0.0045 U	< 0.0044 U	< 0.0045 U	< 0.0047 U	< 0.0047 U	< 0.0044 U	< 0.0047 U	< 0.0047 U	< 0.0047 U	< 0.0053 U	< 0.005 U	< 0.0049 U	< 0.0047 U	< 0.0044 U	< 0.0049 U	< 0.0045 U
1,3-Dichlorobenzene							< 0.0045 U	< 0.0044 U	< 0.0045 U	< 0.0047 U	< 0.0047 U	< 0.0044 U	< 0.0047 U	< 0.0047 U	< 0.0047 U	< 0.0053 U	< 0.005 U	< 0.0049 U	< 0.0047 U	< 0.0044 U	< 0.0049 U	< 0.0045 U
1,4-Dichlorobenzene			12	2.4	0.072	0.0004	< 0.0045 U	< 0.0044 U	< 0.0045 U	< 0.0047 U	< 0.0047 U	< 0.0044 U	< 0.0047 U	< 0.0047 U	< 0.0047 U	< 0.0053 U	< 0.005 U	< 0.0049 U	< 0.0047 U	< 0.0044 U	< 0.0049 U	< 0.0045 U
2-Butanone			200000	28000		1	< 0.009 U	< 0.0088 UJ	< 0.009 U	< 0.0094 U	< 0.0094 U	< 0.0089 U	< 0.0094 U	< 0.0094 UJ	< 0.0094 UJ	< 0.011 U	< 0.01 U	< 0.0097 U	< 0.0094 U	< 0.0088 U	< 0.0098 U	< 0.0091 U
2-Hexanone			1400	210		0.0079	< 0.009 U	< 0.0088 UJ	< 0.009 U	< 0.0094 U	< 0.0094 U	< 0.0089 U	< 0.0094 U	< 0.0094 UJ	< 0.0094 UJ	< 0.011 U	< 0.01 U	< 0.0097 U	< 0.0094 U	< 0.0088 U	< 0.0098 U	< 0.0091 U
4-Methyl-2-pentanone			53000	5300		0.23	< 0.009 U	< 0.0088 UJ	< 0.009 U	< 0.0094 U	< 0.0094 U	< 0.0089 U	< 0.0094 U	< 0.0094 UJ	< 0.0094 UJ	< 0.011 U	< 0.01 U	< 0.0097 U	< 0.0094 U	< 0.0088 U	< 0.0098 U	< 0.0091 U
Acetone			630000	61000		2.4	< 0.018 UJ	**0.015 UJ**	**0.063 J**	**0.012 J**	**0.024 J**	**0.063 J**	**0.062**	**0.031 UJ**	**0.019 UJ**	< 0.021 U	< 0.02 UJ	**0.017 J**	**0.016 J**	**0.024**	**0.063 J**	**0.015 J**
Benzene			5.4	1.1	0.0026	0.0002	< 0.0045 U	< 0.0044 U	< 0.0045 U	< 0.0047 U	< 0.0047 U	< 0.0044 U	< 0.0047 U	< 0.0047 U	< 0.0047 U	< 0.0053 U	< 0.005 U	< 0.0049 U	< 0.0047 U	< 0.0044 U	< 0.0049 U	< 0.0045 U
Benzene, 1-methylethyl			11000	2100		0.64	< 0.0045 U	< 0.0044 U	< 0.0045 U	< 0.0047 U	**0.00081 J**	< 0.0044 U	< 0.0047 U	< 0.0047 U	< 0.0047 U	< 0.0053 U	< 0.005 U	< 0.0049 U	< 0.0047 U	< 0.0044 U	< 0.0049 U	< 0.0045 U
Bromodichloromethane			1.4	0.27	0.022	0.000032	< 0.0045 U	< 0.0044 U	< 0.0045 U	< 0.0047 U	< 0.0047 U	< 0.0044 U	< 0.0047 U	< 0.0047 U	< 0.0047 U	< 0.0053 U	< 0.005 U	< 0.0049 U	< 0.0047 U	< 0.0044 U	< 0.0049 U	< 0.0045 U
Bromoform			220	62	0.021	0.0021	< 0.0045 U	< 0.0044 U	< 0.0045 U	< 0.0047 U	< 0.0047 U	< 0.0044 U	< 0.0047 U	< 0.0047 U	< 0.0047 U	< 0.0053 U	< 0.005 U	< 0.0049 U	< 0.0047 U	< 0.0044 U	< 0.0049 U	< 0.0045 U
Bromomethane			32	7.3		0.0018	< 0.0045 U	< 0.0044 U	< 0.0045 U	< 0.0047 UJ	< 0.0047 U	< 0.0044 U	< 0.0047 UJ	< 0.0047 U	< 0.0047 U	< 0.0053 UJ	< 0.005 U	< 0.0049 UJ	< 0.0047 UJ	< 0.0044 UJ	< 0.0049 U	< 0.0045 UJ
Carbon disulfide			3700	820		0.21	< 0.0045 U	< 0.0044 U	< 0.0045 U	< 0.0047 U	< 0.0047 U	< 0.0044 U	< 0.0047 U	< 0.0047 U	< 0.0047 U	< 0.0053 U	< 0.005 U	< 0.0049 U	< 0.0047 U	< 0.0044 U	< 0.0049 U	< 0.0045 U
Carbon tetrachloride			3	0.61	0.0019	0.00015	< 0.0045 U	< 0.0044 U	< 0.0045 U	< 0.0047 U	< 0.0047 U	< 0.0044 U	< 0.0047 U	< 0.0047 U	< 0.0047 U	< 0.0053 U	< 0.005 U	< 0.0049 U	< 0.0047 U	< 0.0044 U	< 0.0049 U	< 0.0045 U
CFC-11			3400	790		0.69	< 0.0045 U	< 0.0044 U	< 0.0045 U	< 0.0047 UJ	< 0.0047 U	< 0.0044 U	< 0.0047 UJ	< 0.0047 U	< 0.0047 U	< 0.0053 UJ	< 0.005 U	< 0.0049 UJ	< 0.0047 UJ	< 0.0044 UJ	< 0.0049 U	< 0.0045 UJ
CFC-12			400	94		0.3	< 0.0045 U	< 0.0044 U	< 0.0045 U	< 0.0047 UJ	< 0.0047 U	< 0.0044 U	< 0.0047 UJ	< 0.0047 U	< 0.0047 U	< 0.0053 UJ	< 0.005 U	< 0.0049 UJ	< 0.0047 UJ	< 0.0044 UJ	< 0.0049 U	< 0.0045 UJ
Chlorobenzene			1400	290	0.068	0.049	< 0.0045 U	< 0.0044 U	< 0.0045 U	< 0.0047 U	< 0.0047 U	< 0.0044 U	< 0.0047 U	< 0.0047 U	< 0.0047 U	< 0.0053 U	< 0.005 U	< 0.0049 U	< 0.0047 U	< 0.0044 U	< 0.0049 U	< 0.0045 U
Chloroethane			61000	15000		5.9	< 0.0045 UJ	< 0.0044 U	< 0.0045 UJ	< 0.0047 UJ	< 0.0047 UJ	< 0.0044 UJ	< 0.0047 UJ	< 0.0047 U	< 0.0047 U	< 0.0053 UJ	< 0.005 UJ	< 0.0049 UJ	< 0.0047 UJ	< 0.0044 UJ	< 0.0049 UJ	< 0.0045 UJ
Chloroform			1.5	0.29	0.022	0.000053	< 0.0045 U	< 0.0044 U	< 0.0045 U	< 0.0047 U	< 0.0047 U	< 0.0044 U	< 0.0047 U	< 0.0047 U	< 0.0047 U	< 0.0053 U	< 0.005 U	< 0.0049 U	< 0.0047 U	< 0.0044 U	< 0.0049 U	< 0.0045 U
Chloromethane			500	120		0.049	< 0.0045 U	< 0.0044 U	< 0.0045 U	< 0.0047 UJ	< 0.0047 U	< 0.0044 U	< 0.0047 UJ	< 0.0047 U	< 0.0047 U	< 0.0053 UJ	< 0.005 U	< 0.0049 UJ	< 0.0047 UJ	< 0.0044 UJ	< 0.0049 U	< 0.0045 UJ
cis-1,2-Dichloroethene			2000	160	0.021	0.0082	< 0.0045 U	< 0.0044 U	< 0.0045 U	< 0.0047 U	< 0.0047 U	< 0.0044 U	< 0.0047 U	< 0.0047 U	< 0.0047 U	< 0.0053 U	< 0.005 U	< 0.0049 U	< 0.0047 U	< 0.0044 U	< 0.0049 U	< 0.0045 U
cis-1,3-Dichloropropene							< 0.0045 U	< 0.0044 U	< 0.0045 U	< 0.0047 U	< 0.0047 U	< 0.0044 U	< 0.0047 U	< 0.0047 U	< 0.0047 U	< 0.0053 U	< 0.005 U	< 0.0049 U	< 0.0047 U	< 0.0044 U	< 0.0049 U	< 0.0045 U
Cyclohexane			29000	7000		13	< 0.0045 U	< 0.0044 U	< 0.0045 U	< 0.0047 UJ	< 0.0047 U	< 0.0044 U	< 0.0047 UJ	< 0.0047 U	< 0.0047 U	< 0.0053 UJ	< 0.005 U	< 0.0049 UJ	< 0.0047 UJ	< 0.0044 UJ	< 0.0049 U	< 0.0045 UJ
Dibromochloromethane			3.3	0.68	0.021	0.000039	< 0.0045 U	< 0.0044 U	< 0.0045 U	< 0.0047 U	< 0.0047 U	< 0.0044 U	< 0.0047 U	< 0.0047 U	< 0.0047 U	< 0.0053 U	< 0.005 U	< 0.0049 U	< 0.0047 U	< 0.0044 U	< 0.0049 U	< 0.0045 U
Ethylbenzene			27	5.4	0.78	0.0015	< 0.0045 U	< 0.0044 U	< 0.0045 U	< 0.0047 U	< 0.0047 U	< 0.0044 U	< 0.0047 U	< 0.0047 U	< 0.0047 U	< 0.0053 U	< 0.005 U	< 0.0049 U	< 0.0047 U	< 0.0044 U	< 0.0049 U	< 0.0045 U
Methyl acetate			1000000	78000		3.2	< 0.0045 U	< 0.0044 UJ	< 0.0045 U	< 0.0047 UJ	< 0.0047 U	< 0.0044 U	< 0.0047 UJ	< 0.0047 UJ	< 0.0047 UJ	< 0.0053 UJ	< 0.005 U	< 0.0049 UJ	< 0.0047 UJ	< 0.0044 UJ	< 0.0049 U	< 0.0045 UJ
Methylcyclohexane							< 0.0045 U	< 0.0044 U	< 0.0045 U	< 0.0047 UJ	< 0.0047 U	< 0.0044 U	**0.001 J**	< 0.0047 U	< 0.0047 U	< 0.0053 UJ	< 0.005 U	< 0.0049 UJ	< 0.0047 UJ	< 0.0044 UJ	< 0.0049 U	< 0.0045 UJ
Methylene chloride			960	56	0.0013	0.0025	< 0.0045 U	< 0.0044 U	< 0.0045 U	< 0.0047 U	< 0.0047 U	< 0.0044 U	< 0.0047 U	< 0.0047 U	< 0.0047 U	< 0.0053 U	< 0.005 U	< 0.0049 U	< 0.0047 U	< 0.0044 U	< 0.0049 U	< 0.0045 U
Styrene			36000	6300	0.11	1.2	< 0.0045 U	< 0.0044 U	< 0.0045 U	< 0.0047 U	< 0.0047 U	< 0.0044 U	< 0.0047 U	< 0.0047 U	< 0.0047 U	< 0.0053 U	< 0.005 U	< 0.0049 U	< 0.0047 U	< 0.0044 U	< 0.0049 U	< 0.0045 U
tert-Butyl methyl ether			220	43		0.0028	< 0.0045 U	< 0.0044 U	< 0.0045 U	< 0.0047 U	< 0.0047 U	< 0.0044 U	< 0.0047 U	< 0.0047 U	< 0.0047 U	< 0.0053 U	< 0.005 U	< 0.0049 U	< 0.0047 U	< 0.0044 U	< 0.0049 U	< 0.0045 U
Tetrachloroethene			110	22	0.0023	0.0044	< 0.0045 U	< 0.0044 U	< 0.0045 U	< 0.0047 U	< 0.0047 U	< 0.0044 U	< 0.0047 U	< 0.0047 U	< 0.0047 U	< 0.0053 U	< 0.005 U	< 0.0049 U	< 0.0047 U	< 0.0044 U	< 0.0049 U	< 0.0045 U
Toluene			45000	5000	0.69	0.59	< 0.0045 U	< 0.0044 U	< 0.0045 U	< 0.0047 U	< 0.0047 U	< 0.0044 U	< 0.0047 U	< 0.0047 U	< 0.0047 U	< 0.0053 U	< 0.005 U	< 0.0049 U	< 0.0047 U	< 0.0044 U	< 0.0049 U	< 0.0045 U
trans-1,2-Dichloroethene			690	150	0.029	0.025	< 0.0045 U	< 0.0044 U	< 0.0045 U	< 0.0047 U	< 0.0047 U	< 0.0044 U	< 0.0047 U	< 0.0047 U	< 0.0047 U	< 0.0053 U	< 0.005 U	< 0.0049 U	< 0.0047 U	< 0.0044 U	< 0.0049 U	< 0.0045 U
trans-1,3-Dichloropropene							< 0.0045 U	< 0.0044 U	< 0.0045 U	< 0.0047 U	< 0.0047 U	< 0.0044 U	< 0.0047 U	< 0.0047 U	< 0.0047 U	< 0.0053 U	< 0.005 U	< 0.0049 U	< 0.0047 U	< 0.0044 U	< 0.0049 U	< 0.0045 U
Trichloroethene			6.4	0.91	0.0018	0.00016	< 0.0045 U	< 0.0044 U	< 0.0045 U	< 0.0047 U	< 0.0047 U	< 0.0044 U	< 0.0047 U	< 0.0047 U	< 0.0047 U	< 0.0053 U	< 0.005 U	< 0.0049 U	< 0.0047 U	< 0.0044 U	< 0.0049 U	< 0.0045 U
Vinyl chloride			1.7	0.06	0.00069	0.0000053	< 0.0045 U	< 0.0044 U	< 0.0045 U	< 0.0047 UJ	< 0.0047 U	< 0.0044 U	< 0.0047 UJ	< 0.0047 U	< 0.0047 U	< 0.0053 UJ	< 0.005 U	< 0.0049 UJ	< 0.0047 UJ	< 0.0044 UJ	< 0.0049 U	< 0.0045 UJ
Xylenes (total)			2700	630	9.8	0.19	< 0.0045 U	< 0.0044 U	< 0.0045 U	< 0.0047 U	< 0.0047 U	< 0.0044 U	< 0.0047 U	< 0.0047 U	< 0.0047 U	< 0.0053 U	< 0.005 U	< 0.0049 U	< 0.0047 U	< 0.0044 U	< 0.0049 U	< 0.0045 U
SVOCs - USEPA Method 8270 (mg/kg)																						
1,1'-Biphenyl			210	51		0.0087	< 0.078 U	< 0.15 U	< 0.075 U	< 0.072 U	< 0.073 U	< 0.074 U	< 0.074 U	< 0.15 U	< 0.15 U	< 0.078 U	< 0.076 U	< 0.076 U	< 0.073 U	< 0.072 U	< 0.076 U	< 0.069 U
2,4,5-Trichlorophenol			62000	6100		3.3	< 0.078 U	< 0.15 U	< 0.075 U	< 0.072 U	< 0.073 U	< 0.074 U	< 0.074 U	< 0.15 U	< 0.15 U	< 0.078 U	< 0.076 U	< 0.076 U	< 0.073 U	< 0.072 U	< 0.076 U	< 0.069 U
2,4,6-Trichlorophenol			160	44		0.013	< 0.078 U	< 0.15 U	< 0.075 U	< 0.072 U	< 0.073 U	< 0.074 U	< 0.074 U	< 0.15 U	< 0.15 U	< 0.078 U	< 0.076 U	< 0.076 U	< 0.073 U	< 0.072 U	< 0.076 U	< 0.069 U
2,4-Dichlorophenol			1800	180		0.041	< 0.078 U	< 0.15 U	< 0.075 U	< 0.072 U	< 0.073 U	< 0.074 U	< 0.074 U	< 0.15 U	< 0.15 U	< 0.078 U	< 0.076 U	< 0.076 U	< 0.073 U	< 0.072 U	< 0.076 U	< 0.069 U
2,4-Dimethylphenol			12000	1200		0.32	< 0.078 U	< 0.15 U	< 0.075 U	< 0.072 U	< 0.073 U	< 0.074 U	< 0.074 U	< 0.15 U	< 0.15 U	< 0.078 U	< 0.076 U	< 0.076 U	< 0.073 U	< 0.072 U	< 0.076 U	< 0.069 U
2,4-Dinitrophenol			1200	120		0.034	< 0.38 U	< 0.75 U	< 0.37 U	< 0.36 U	< 0.36 U	< 0.36 U	< 0.36 U	< 0.75 U	< 0.74 U	< 0.38 U	< 0.37 U	< 0.37 U	< 0.36 U	< 0.35 U	< 0.37 U	< 0.34 U
2,4-Dinitrotoluene			5.5	1.6		0.00028	< 0.15 U	< 0.3 U	< 0.15 U	< 0.14 U	< 0.14 U	< 0.14 U	< 0.14 U	< 0.29 U	< 0.29 U	< 0.15 U	< 0.15 U	< 0.15 U	< 0.14 U	< 0.14 U	< 0.15 U	< 0.13 U
2,6-Dinitrotoluene			620	61		0.02	< 0.15 U	< 0.3 U	< 0.15 U	< 0.14 U	< 0.14 U	< 0.14 U	< 0.14 U	< 0.29 U	< 0.29 U	< 0.15 U	< 0.15 U	< 0.15 U	< 0.14 U	< 0.14 U	< 0.15 U	< 0.13 U
2-Chloronaphthalene			82000	6300		2.9	< 0.078 U	< 0.15 U	< 0.075 U	< 0.072 U	< 0.073 U	< 0.074 U	< 0.074 U	< 0.15 U	< 0.15 U	< 0.078 U	< 0.076 U	< 0.076 U	< 0.073 U	< 0.072 U	< 0.076 U	< 0.069 U
2-Chlorophenol			5100	390		0.057	< 0.078 UJ	< 0.15 U	< 0.075 U	< 0.072 U	< 0.073 U	< 0.074 U	< 0.074 U	< 0.15 U	< 0.15 U	< 0.078 U	< 0.076 U	< 0.076 U	< 0.073 U	< 0.072 U	< 0.076 U	< 0.069 U
2-Methyl-4,6-dinitrophenol			49	4.9		0.002	< 0.38 U	< 0.75 U	< 0.37 U	< 0.36 U	< 0.36 U	< 0.36 U	< 0.36 U	< 0.75 U	< 0.74 U	< 0.38 U	< 0.37 U	< 0.37 U	< 0.36 U	< 0.35 U	< 0.37 U	< 0.34 U
2-Methylnaphthalene			2200	230		0.14	< 0.078 U	< 0.15 U	< 0.075 U	< 0.072 U	< 0.073 U	< 0.074 U	**0.055 J**	< 0.15 U	< 0.15 U	< 0.078 U	< 0.076 U	< 0.076 U	< 0.073 U	< 0.072 U	< 0.076 U	< 0.069 U
2-Methylphenol			31000	3100		0.58	< 0.078 UJ	< 0.15 U	< 0.075 U	< 0.072 U	< 0.073 U	< 0.074 U	< 0.074 U	< 0.15 U	< 0.15 U	< 0.078 U	< 0.076 U	< 0.076 U	< 0.073 U	< 0.072 U	< 0.076 U	< 0.069 U
2-Nitrobenzenamine			6000	610		0.062	< 0.15 U	< 0.3 U	< 0.15 U	< 0.14 U	< 0.14 U	< 0.14 U	< 0.14 U	< 0.29 U	< 0.29 U	< 0.15 U	< 0.15 U	< 0.15 U	< 0.14 U	< 0.14 U	< 0.15 U	< 0.13 U
2-Nitrophenol							< 0.15 U	< 0.3 U	< 0.15 U	< 0.14 U	< 0.14 U	< 0.14 U	< 0.14 U	< 0.29 U	< 0.29 U	< 0.15 U	< 0.15 U	< 0.15 U	< 0.14 U	< 0.14 U	< 0.15 U	< 0.13 U
3,3'-Dichlorobenzidine			3.8	1.1		0.00071	< 0.38 U	< 0.75 U	< 0.37 U	< 0.36 U	< 0.36 U	< 0.36 U	< 0.36 U	< 0.75 U	< 0.74 U	< 0.38 U	< 0.37 U	< 0.37 U	< 0.36 U	< 0.35 U	< 0.37 U	< 0.34 U
3-Nitrobenzenamine							< 0.15 U	< 0.3 U	< 0.15 U	< 0.14 U	< 0.14 U	< 0.14 U	< 0.14 U	< 0.29 U	< 0.29 U	< 0.15 U	< 0.15 U	< 0.15 U	< 0.14 U	< 0.14 U	< 0.15 U	< 0.13 U
4-Bromophenyl phenyl ether							< 0.078 U	< 0.15 U	< 0.075 U	< 0.072 U	< 0.073 U	< 0.074 U	< 0.074 U	< 0.15 U	< 0.15 U	< 0.078 U	< 0.076 U	< 0.076 U	< 0.073 U	< 0.072 U	< 0.076 U	< 0.069 U
4-Chloro-3-methylphenol			62000	6100		1.3	< 0.078 U	< 0.15 U	< 0.075 U	< 0.072 U	< 0.073 U	< 0.074 U	< 0.074 U	< 0.15 U	< 0.15 U	< 0.078 U	< 0.076 U	< 0.076 U	< 0.073 U	< 0.072 U	< 0.076 U	< 0.069 U

Footnotes appear on last page.

Table 4-6
2010 and 2011 Soil Analytical Data
SWMU 39
Fort Stewart, Georgia

						Location ID	F39SB001	F39SB002	F39SB003	F39SB004	F39SB005	F39SB006	F39SB007	F39SB008	F39SB008-DUP	F39SB009	F39SB009	F39SB010	F39SB010	F39SB011	F39SB011	F39SB012
						Sample Date	3/15/2010	3/18/2010	3/15/2010	3/15/2010	3/15/2010	3/15/2010	3/15/2010	3/18/2010	3/18/2010	3/15/2010	3/15/2010	3/16/2010	3/16/2010	3/16/2010	3/16/2010	3/16/2010
						Depth (ft bls)	4.5-5.5	4-5	4-5	4-5	4-5	4-5	4-5	4-5	4-5	0.5-1	3-3.5	0.5-1	3-3.5	0.5-1	3-3.5	0.5-1
Chemical Name	Surface BK	Subsurface BK	Industrial Soil RSL	Resident Soil RSL	MCL based SSL	Risk based SSL																
SVOCs - USEPA Method 8270 (mg/kg)																						
4-Chlorobenzenamine			8.6	2.4		0.00013	< 0.078 U	< 0.15 U	< 0.075 U	< 0.072 U	< 0.073 U	< 0.074 U	< 0.074 U	< 0.15 U	< 0.15 U	< 0.078 U	< 0.076 U	< 0.076 U	< 0.073 U	< 0.072 U	< 0.076 U	< 0.069 U
4-Chlorophenyl phenyl ether							< 0.078 U	< 0.15 U	< 0.075 U	< 0.072 U	< 0.073 U	< 0.074 U	< 0.074 U	< 0.15 U	< 0.15 U	< 0.078 U	< 0.076 U	< 0.076 U	< 0.073 U	< 0.072 U	< 0.076 U	< 0.069 U
4-Methylphenol			62000	6100		1.1	< 0.15 U	< 0.3 U	< 0.15 U	< 0.14 U	< 0.14 U	< 0.14 U	< 0.14 U	< 0.29 U	< 0.29 U	< 0.15 U	< 0.15 U	< 0.15 U	< 0.14 U	< 0.14 U	< 0.15 U	< 0.13 U
4-Nitrobenzenamine			86	24		0.0014	< 0.15 U	< 0.3 U	< 0.15 U	< 0.14 U	< 0.14 U	< 0.14 U	< 0.14 U	< 0.29 U	< 0.29 U	< 0.15 U	< 0.15 U	< 0.15 U	< 0.14 U	< 0.14 U	< 0.15 U	< 0.13 U
4-Nitrophenol							< 0.38 U	< 0.75 U	< 0.37 U	< 0.36 U	< 0.36 U	< 0.36 U	< 0.36 U	< 0.75 U	< 0.74 U	< 0.38 U	< 0.37 U	< 0.37 U	< 0.36 U	< 0.35 U	< 0.37 U	< 0.34 U
Acenaphthene			33000	3400		4.1	< 0.078 U	< 0.15 U	< 0.075 U	< 0.072 U	< 0.073 U	< 0.074 U	< 0.074 U	< 0.15 U	< 0.15 U	< 0.078 U	< 0.076 U	< 0.076 U	< 0.073 U	< 0.072 U	< 0.076 U	< 0.069 U
Acenaphthylene							< 0.078 U	< 0.15 U	< 0.075 U	< 0.072 U	< 0.073 U	< 0.074 U	**0.052 J**	< 0.15 U	< 0.15 U	< 0.078 U	< 0.076 U	**0.4**	**0.029 J**	< 0.072 U	< 0.076 U	< 0.069 U
Acetophenone			100000	7800		0.45	< 0.078 U	< 0.15 U	< 0.075 U	< 0.072 U	< 0.073 U	< 0.074 U	< 0.074 U	< 0.15 U	< 0.15 U	< 0.078 U	< 0.076 U	< 0.076 U	< 0.073 U	< 0.072 U	< 0.076 U	< 0.069 U
Anthracene			170000	17000		42	< 0.078 U	< 0.15 U	< 0.075 U	< 0.072 U	< 0.073 U	< 0.074 U	**0.035 J**	< 0.15 U	< 0.15 U	< 0.078 U	< 0.076 U	**0.25**	< 0.073 U	< 0.072 U	< 0.076 U	< 0.069 U
Atrazine			7.5	2.1	0.0019	0.00017	< 0.078 U	< 0.15 U	< 0.075 U	< 0.072 U	< 0.073 U	< 0.074 U	< 0.074 U	< 0.15 U	< 0.15 U	< 0.078 U	< 0.076 U	< 0.076 U	< 0.073 U	< 0.072 U	< 0.076 U	< 0.069 U
Benz(a)anthracene			2.1	0.15		0.01	< 0.078 U	< 0.15 U	< 0.075 U	< 0.072 U	< 0.073 U	< 0.074 U	**0.059 J**	< 0.15 U	< 0.15 U	< 0.078 U	< 0.076 U	**0.5**	**0.038 J**	< 0.072 U	< 0.076 U	< 0.069 U
Benzaldehyde			100000	7800		0.33	< 0.078 U	< 0.15 U	< 0.075 U	< 0.072 U	< 0.073 U	**0.13**	< 0.074 U	< 0.15 U	< 0.15 U	< 0.078 U	< 0.076 U	< 0.076 U	< 0.073 U	< 0.072 U	**0.097**	< 0.069 U
Benzo(a)pyrene			0.21	0.015	0.24	0.0035	< 0.078 U	< 0.15 U	< 0.075 U	< 0.072 U	< 0.073 U	< 0.074 U	**0.074**	< 0.15 U	< 0.15 U	< 0.078 U	< 0.076 U	**0.82**	< 0.073 U	< 0.072 U	< 0.076 U	< 0.069 U
Benzo(b)fluoranthene			2.1	0.15		0.035	< 0.078 U	< 0.15 U	< 0.075 U	< 0.072 U	< 0.073 U	< 0.074 U	**0.097**	< 0.15 U	< 0.15 U	< 0.078 U	< 0.076 U	**1.1**	**0.073**	< 0.072 U	< 0.076 U	< 0.069 U
Benzo(ghi)perylene							< 0.078 U	< 0.15 U	< 0.075 U	< 0.072 U	< 0.073 U	< 0.074 U	**0.062 J**	< 0.15 U	< 0.15 U	< 0.078 U	< 0.076 U	**0.48**	< 0.073 U	< 0.072 U	< 0.076 U	< 0.069 U
Benzo(k)fluoranthene			21	1.5		0.35	< 0.078 U	< 0.15 U	< 0.075 U	< 0.072 U	< 0.073 U	< 0.074 U	**0.032 J**	< 0.15 U	< 0.15 U	< 0.078 U	< 0.076 U	**0.38**	**0.021 J**	< 0.072 U	< 0.076 U	< 0.069 U
Bis(2-chloroethoxy)methane			1800	180		0.011	< 0.078 U	< 0.15 U	< 0.075 U	< 0.072 U	< 0.073 U	< 0.074 U	< 0.074 U	< 0.15 U	< 0.15 U	< 0.078 U	< 0.076 U	< 0.076 U	< 0.073 U	< 0.072 U	< 0.076 U	< 0.069 U
Bis(2-chloroethyl) ether			1	0.21		0.0000031	< 0.078 UJ	< 0.15 U	< 0.075 U	< 0.072 U	< 0.073 U	< 0.074 U	< 0.074 U	< 0.15 U	< 0.15 U	< 0.078 U	< 0.076 U	< 0.076 U	< 0.073 U	< 0.072 U	< 0.076 U	< 0.069 U
Bis(2-chloroisopropyl) ether			22	4.6		0.00011	< 0.078 UJ	< 0.15 U	< 0.075 U	< 0.072 U	< 0.073 U	< 0.074 U	< 0.074 U	< 0.15 U	< 0.15 U	< 0.078 U	< 0.076 U	< 0.076 U	< 0.073 U	< 0.072 U	< 0.076 U	< 0.069 U
Bis(2-ethylhexyl)phthalate			120	35	1.4	1.1	< 0.078 U	< 0.15 U	< 0.075 U	< 0.072 U	< 0.073 U	< 0.074 U	< 0.074 U	< 0.15 U	< 0.15 U	< 0.078 U	< 0.076 U	< 0.076 U	< 0.073 U	< 0.072 U	< 0.076 U	< 0.069 U
Butyl benzyl phthalate			910	260		0.2	< 0.15 U	< 0.3 U	< 0.15 U	< 0.14 U	< 0.14 U	< 0.14 U	< 0.14 U	< 0.29 U	< 0.29 U	< 0.15 U	< 0.15 U	< 0.15 U	< 0.14 U	< 0.14 U	< 0.15 U	< 0.13 U
Caprolactam			310000	31000		1.9	< 0.078 U	< 0.15 U	< 0.075 U	< 0.072 U	< 0.073 U	< 0.074 U	< 0.074 U	< 0.15 U	< 0.15 U	< 0.078 U	< 0.076 U	< 0.076 U	< 0.073 U	< 0.072 U	< 0.076 U	< 0.069 U
Carbazole							< 0.078 U	< 0.15 U	< 0.075 U	< 0.072 U	< 0.073 U	< 0.074 U	< 0.074 U	< 0.15 U	< 0.15 U	< 0.078 U	< 0.076 U	< 0.076 U	< 0.073 U	< 0.072 U	< 0.076 U	< 0.069 U
Chrysene			210	15		1.1	< 0.078 U	< 0.15 U	< 0.075 U	< 0.072 U	< 0.073 U	< 0.074 U	**0.089**	< 0.15 U	< 0.15 U	< 0.078 U	< 0.076 U	**0.57**	**0.044 J**	< 0.072 U	< 0.076 U	< 0.069 U
Dibenz(a,h)anthracene			0.21	0.015		0.011	< 0.078 U	< 0.15 U	< 0.075 U	< 0.072 U	< 0.073 U	< 0.074 U	< 0.074 U	< 0.15 U	< 0.15 U	< 0.078 U	< 0.076 U	< 0.076 U	< 0.073 U	< 0.072 U	< 0.076 U	< 0.069 U
Dibenzofuran			1000	78		0.11	< 0.078 U	< 0.15 U	< 0.075 U	< 0.072 U	< 0.073 U	< 0.074 U	< 0.074 U	< 0.15 U	< 0.15 U	< 0.078 U	< 0.076 U	< 0.076 U	< 0.073 U	< 0.072 U	< 0.076 U	< 0.069 U
Diethyl phthalate			490000	49000		4.7	< 0.078 U	< 0.15 U	< 0.075 U	< 0.072 U	< 0.073 U	< 0.074 U	< 0.074 U	< 0.15 U	< 0.15 U	< 0.078 U	< 0.076 U	< 0.076 U	< 0.073 U	< 0.072 U	< 0.076 U	< 0.069 U
Dimethyl phthalate							< 0.078 U	< 0.15 U	< 0.075 U	< 0.072 U	< 0.073 U	< 0.074 U	< 0.074 U	< 0.15 U	< 0.15 U	< 0.078 U	< 0.076 U	< 0.076 U	< 0.073 U	< 0.072 U	< 0.076 U	< 0.069 U
Di-n-butyl phthalate			62000	6100		1.7	< 0.078 U	< 0.15 U	< 0.075 U	< 0.072 U	< 0.073 U	< 0.074 U	< 0.074 U	< 0.15 U	< 0.15 U	< 0.078 U	< 0.076 U	< 0.076 U	< 0.073 U	< 0.072 U	< 0.076 U	< 0.069 U
Di-n-octylphthalate			7400	730		53	< 0.078 U	< 0.15 U	< 0.075 U	< 0.072 U	< 0.073 U	< 0.074 U	< 0.074 U	< 0.15 U	< 0.15 U	< 0.078 U	< 0.076 U	**0.039 J**	< 0.073 U	< 0.072 U	< 0.076 U	< 0.069 U
Fluoranthene			22000	2300		70	< 0.078 U	< 0.15 U	< 0.075 U	< 0.072 U	< 0.073 U	< 0.074 U	**0.089**	< 0.15 U	< 0.15 U	< 0.078 U	< 0.076 U	**0.28**	**0.021 J**	< 0.072 U	< 0.076 U	< 0.069 U
Fluorene			22000	2300		4	< 0.078 U	< 0.15 U	< 0.075 U	< 0.072 U	< 0.073 U	< 0.074 U	< 0.074 U	< 0.15 U	< 0.15 U	< 0.078 U	< 0.076 U	< 0.076 U	< 0.073 U	< 0.072 U	< 0.076 U	< 0.069 U
Hexachlorobenzene			1.1	0.3	0.013	0.00053	< 0.078 U	< 0.15 U	< 0.075 U	< 0.072 U	< 0.073 U	< 0.074 U	< 0.074 U	< 0.15 U	< 0.15 U	< 0.078 U	< 0.076 U	< 0.076 U	< 0.073 U	< 0.072 U	< 0.076 U	< 0.069 U
Hexachlorobutadiene			22	6.2		0.0005	< 0.078 U	< 0.15 U	< 0.075 U	< 0.072 U	< 0.073 U	< 0.074 U	< 0.074 U	< 0.15 U	< 0.15 U	< 0.078 U	< 0.076 U	< 0.076 U	< 0.073 U	< 0.072 U	< 0.076 U	< 0.069 U
Hexachlorocyclopentadiene			3700	370	0.16	0.07	< 0.38 U	< 0.75 U	< 0.37 U	< 0.36 U	< 0.36 U	< 0.36 U	< 0.36 U	< 0.75 U	< 0.74 U	< 0.38 U	< 0.37 U	< 0.37 U	< 0.36 U	< 0.35 U	< 0.37 U	< 0.34 U
Hexachloroethane			43	12		0.00048	< 0.078 U	< 0.15 U	< 0.075 U	< 0.072 U	< 0.073 U	< 0.074 U	< 0.074 U	< 0.15 U	< 0.15 U	< 0.078 U	< 0.076 U	< 0.076 U	< 0.073 U	< 0.072 U	< 0.076 U	< 0.069 U
Indeno(1,2,3-cd)pyrene			2.1	0.15		0.2	< 0.078 U	< 0.15 U	< 0.075 U	< 0.072 U	< 0.073 U	< 0.074 U	**0.042 J**	< 0.15 U	< 0.15 U	< 0.078 U	< 0.076 U	**0.42**	< 0.073 U	< 0.072 U	< 0.076 U	< 0.069 U
Isophorone			1800	510		0.022	< 0.078 U	< 0.15 U	< 0.075 U	< 0.072 U	< 0.073 U	< 0.074 U	< 0.074 U	< 0.15 U	< 0.15 U	< 0.078 U	< 0.076 U	< 0.076 U	< 0.073 U	< 0.072 U	< 0.076 U	< 0.069 U
Naphthalene			18	3.6		0.00047	< 0.078 U	< 0.15 U	< 0.075 U	< 0.072 U	< 0.073 U	< 0.074 U	< 0.074 U	< 0.15 U	< 0.15 U	< 0.078 U	< 0.076 U	< 0.076 U	< 0.073 U	< 0.072 U	< 0.076 U	< 0.069 U
Nitrobenzene			24	4.8		0.000079	< 0.078 UJ	< 0.15 U	< 0.075 U	< 0.072 U	< 0.073 U	< 0.074 U	< 0.074 U	< 0.15 U	< 0.15 U	< 0.078 U	< 0.076 U	< 0.076 U	< 0.073 U	< 0.072 U	< 0.076 U	< 0.069 U
N-Nitroso-di-n-propylamine			0.25	0.069		0.000007	< 0.078 U	< 0.15 U	< 0.075 U	< 0.072 U	< 0.073 U	< 0.074 U	< 0.074 U	< 0.15 U	< 0.15 U	< 0.078 U	< 0.076 U	< 0.076 U	< 0.073 U	< 0.072 U	< 0.076 U	< 0.069 U
N-Nitrosodiphenylamine			350	99		0.057	< 0.078 U	< 0.15 U	< 0.075 U	< 0.072 U	< 0.073 U	< 0.074 U	< 0.074 U	< 0.15 U	< 0.15 U	< 0.078 U	< 0.076 U	< 0.076 U	< 0.073 U	< 0.072 U	< 0.076 U	< 0.069 U
Pentachlorophenol			2.7	0.89	0.01	0.00036	< 0.38 U	< 0.75 U	< 0.37 U	< 0.36 U	< 0.36 U	< 0.36 U	< 0.36 U	< 0.75 U	< 0.74 U	< 0.38 U	< 0.37 U	< 0.37 U	< 0.36 U	< 0.35 U	< 0.37 U	< 0.34 U
Phenanthrene							< 0.078 U	< 0.15 U	< 0.075 U	< 0.072 U	< 0.073 U	< 0.074 U	**0.067 J**	< 0.15 U	< 0.15 U	< 0.078 U	< 0.076 U	**0.023 J**	< 0.073 U	< 0.072 U	< 0.076 U	< 0.069 U
Phenol			180000	18000		2.6	< 0.078 U	< 0.15 U	< 0.075 U	< 0.072 U	< 0.073 U	< 0.074 U	< 0.074 U	< 0.15 U	< 0.15 U	< 0.078 U	< 0.076 U	< 0.076 U	< 0.073 U	< 0.072 U	< 0.076 U	< 0.069 U
Pyrene			17000	1700		9.5	< 0.078 U	< 0.15 U	< 0.075 U	< 0.072 U	< 0.073 U	< 0.074 U	**0.12**	< 0.15 U	< 0.15 U	< 0.078 U	< 0.076 U	**0.64**	**0.046 J**	< 0.072 U	< 0.076 U	< 0.069 U
Metals - USEPA Method 6010/7470 (mg/kg)																						
Arsenic	2.1	8.04	1.6	0.39	0.29	0.0013	**0.56**	< 0.57 U	**0.31 J**	< 0.52 U	< 0.5 U	**0.57**	**0.49 J**	**0.3 J**	< 0.57 U	**0.56 J**	**0.7**	< 0.56 U	< 0.51 U	< 0.5 U	**0.48 J**	< 0.51 U
Barium	14.7	17	190000	15000	82	120	**7**	**6.4**	**18**	**2.2**	**2.3**	**6.5**	**12**	**6.2**	**6.7**	**10**	**8.1**	**5**	**3.1**	**6.3**	**3**	**1.1 J**
Cadmium	0.18	0.24	800	70	0.38	0.52	0.049 UB	0.057 UB	0.027 UB	0.029 UB	0.022 UB	0.061 UB	0.1 UB	0.037 UB	0.052 UB	**0.36**	0.045 UB	0.054 UB	0.041 UB	0.038 UB	0.03 UB	0.014 UB
Chromium	6.21	11.6			180000		**2.6**	**3.2**	**3.4**	**2.2**	**1.3**	**2.6**	**3.4**	**2.7**	**2.8**	**5.9**	**3.4**	**3.4**	**1.6**	**2.7**	**1**	0.38 UB
Lead	8.81	11.1	800	400	14		**3.6**	**3.6**	**3.5**	**1.5**	**1.8**	**3.1**	**10**	**3.7**	**3.9**	**43**	**5.4**	**3.4**	**2.5**	**3.6**	**2.1**	**0.81**
Selenium	0.41	1.12	5100	390	0.26	0.4	0.67 UB	0.39 UB	0.79 UB	0.44 UB	0.22 UB	0.55 UB	0.49 UB	0.47 UB	0.53 UB	0.61 UB	0.51 UB	0.38 UB	0.3 UB	0.52 UB	0.38 UB	< 0.51 U
Silver	0.15	0.46	5100	390		0.6	< 0.27 U	< 0.29 U	< 0.27 U	< 0.26 U	< 0.25 U	< 0.27 U	< 0.26 U	< 0.27 U	< 0.28 U	< 0.29 U	< 0.28 U	< 0.28 U	< 0.25 U	< 0.25 U	< 0.28 U	< 0.25 U
Mercury	0.03	0.05	43	10	0.1	0.033	**0.014 J**	**0.029 J**	**0.023 J**	**0.0099 J**	< 0.087 U	**0.015 J**	**0.026 J**	**0.028 J**	**0.02 J**	**0.029 J**	**0.028 J**	**0.03 J**	**0.015 J**	**0.015 J**	< 0.094 U	< 0.086 U

Footnotes appear on last page.

Table 4-6
2010 and 2011 Soil Analytical Data
SWMU 39
Fort Stewart, Georgia

						Location ID	F39SB012	F39SB013	F39SB013	F39SB014	F39SB014	F39SB015	F39SB015	F39SB016	F39SB016	F39SB017	F39SB017	G4MW053	G4MW053
						Sample Date	3/16/2010	4/27/2011	4/27/2011	4/27/2011	4/27/2011	5/19/2011	5/19/2011	5/19/2011	5/19/2011	5/19/2011	5/19/2011	4/27/2011	4/27/2011
						Depth (ft bls)	3-3.5	0.5-1	3-3.5	0.5-1	3-3.5	0.5-1	3-3.5	0.5-1	3-3.5	0.5-1	3-3.5	0.5-1	3-3.5
Chemical Name	Surface BK	Subsurface BK	Industrial Soil RSL	Resident Soil RSL	MCL based SSL	Risk based SSL													
VOCs - USEPA Method 8260 (mg/kg)																			
1,1,1-Trichloroethane			38000	8700	0.07	2.6	< 0.0042 U	NA	NA	NA	NA	NA	NA	NA	NA	NA	NA	NA	NA
1,1,2,2-Tetrachloroethane			2.8	0.56		0.000026	< 0.0042 U	NA	NA	NA	NA	NA	NA	NA	NA	NA	NA	NA	NA
1,1,2-Trichloro-1,2,2-Trifluoroethane			180000	43000		130	< 0.0042 UJ	NA	NA	NA	NA	NA	NA	NA	NA	NA	NA	NA	NA
1,1,2-Trichloroethane			5.3	1.1	0.0016	0.000077	< 0.0042 U	NA	NA	NA	NA	NA	NA	NA	NA	NA	NA	NA	NA
1,1-Dichloroethane			17	3.3		0.00068	< 0.0042 U	NA	NA	NA	NA	NA	NA	NA	NA	NA	NA	NA	NA
1,1-Dichloroethene			1100	240	0.0025	0.093	< 0.0042 UJ	NA	NA	NA	NA	NA	NA	NA	NA	NA	NA	NA	NA
1,2,4-Trichlorobenzene			99	22	0.2	0.0029	< 0.0042 U	NA	NA	NA	NA	NA	NA	NA	NA	NA	NA	NA	NA
1,2-Dibromo-3-chloropropane (DBCP)			0.069	0.0054	0.000086	0.00000014	< 0.0042 U	NA	NA	NA	NA	NA	NA	NA	NA	NA	NA	NA	NA
1,2-Dibromoethane			0.17	0.034	0.000014	0.0000018	< 0.0042 U	NA	NA	NA	NA	NA	NA	NA	NA	NA	NA	NA	NA
1,2-Dichlorobenzene			9800	1900	0.58	0.27	< 0.0042 U	NA	NA	NA	NA	NA	NA	NA	NA	NA	NA	NA	NA
1,2-Dichloroethane			2.2	0.43	0.0014	0.000042	< 0.0042 U	NA	NA	NA	NA	NA	NA	NA	NA	NA	NA	NA	NA
1,2-Dichloropropane			4.7	0.94	0.0017	0.00013	< 0.0042 U	NA	NA	NA	NA	NA	NA	NA	NA	NA	NA	NA	NA
1,3-Dichlorobenzene							< 0.0042 U	NA	NA	NA	NA	NA	NA	NA	NA	NA	NA	NA	NA
1,4-Dichlorobenzene			12	2.4	0.072	0.0004	< 0.0042 U	NA	NA	NA	NA	NA	NA	NA	NA	NA	NA	NA	NA
2-Butanone			200000	28000		1	< 0.0084 U	NA	NA	NA	NA	NA	NA	NA	NA	NA	NA	NA	NA
2-Hexanone			1400	210		0.0079	< 0.0084 U	NA	NA	NA	NA	NA	NA	NA	NA	NA	NA	NA	NA
4-Methyl-2-pentanone			53000	5300		0.23	< 0.0084 U	NA	NA	NA	NA	NA	NA	NA	NA	NA	NA	NA	NA
Acetone			630000	61000		2.4	**0.013 J**	NA	NA	NA	NA	NA	NA	NA	NA	NA	NA	NA	NA
Benzene			5.4	1.1	0.0026	0.0002	< 0.0042 U	NA	NA	NA	NA	NA	NA	NA	NA	NA	NA	NA	NA
Benzene, 1-methylethyl			11000	2100		0.64	< 0.0042 U	NA	NA	NA	NA	NA	NA	NA	NA	NA	NA	NA	NA
Bromodichloromethane			1.4	0.27	0.022	0.000032	< 0.0042 U	NA	NA	NA	NA	NA	NA	NA	NA	NA	NA	NA	NA
Bromoform			220	62	0.021	0.0021	< 0.0042 U	NA	NA	NA	NA	NA	NA	NA	NA	NA	NA	NA	NA
Bromomethane			32	7.3		0.0018	< 0.0042 UJ	NA	NA	NA	NA	NA	NA	NA	NA	NA	NA	NA	NA
Carbon disulfide			3700	820		0.21	< 0.0042 U	NA	NA	NA	NA	NA	NA	NA	NA	NA	NA	NA	NA
Carbon tetrachloride			3	0.61	0.0019	0.00015	< 0.0042 U	NA	NA	NA	NA	NA	NA	NA	NA	NA	NA	NA	NA
CFC-11			3400	790		0.69	< 0.0042 UJ	NA	NA	NA	NA	NA	NA	NA	NA	NA	NA	NA	NA
CFC-12			400	94		0.3	< 0.0042 UJ	NA	NA	NA	NA	NA	NA	NA	NA	NA	NA	NA	NA
Chlorobenzene			1400	290	0.068	0.049	< 0.0042 U	NA	NA	NA	NA	NA	NA	NA	NA	NA	NA	NA	NA
Chloroethane			61000	15000		5.9	< 0.0042 UJ	NA	NA	NA	NA	NA	NA	NA	NA	NA	NA	NA	NA
Chloroform			1.5	0.29	0.022	0.000053	< 0.0042 U	NA	NA	NA	NA	NA	NA	NA	NA	NA	NA	NA	NA
Chloromethane			500	120		0.049	< 0.0042 UJ	NA	NA	NA	NA	NA	NA	NA	NA	NA	NA	NA	NA
cis-1,2-Dichloroethene			2000	160	0.021	0.0082	< 0.0042 U	NA	NA	NA	NA	NA	NA	NA	NA	NA	NA	NA	NA
cis-1,3-Dichloropropene							< 0.0042 U	NA	NA	NA	NA	NA	NA	NA	NA	NA	NA	NA	NA
Cyclohexane			29000	7000		13	< 0.0042 UJ	NA	NA	NA	NA	NA	NA	NA	NA	NA	NA	NA	NA
Dibromochloromethane			3.3	0.68	0.021	0.000039	< 0.0042 U	NA	NA	NA	NA	NA	NA	NA	NA	NA	NA	NA	NA
Ethylbenzene			27	5.4	0.78	0.0015	< 0.0042 U	NA	NA	NA	NA	NA	NA	NA	NA	NA	NA	NA	NA
Methyl acetate			1000000	78000		3.2	< 0.0042 UJ	NA	NA	NA	NA	NA	NA	NA	NA	NA	NA	NA	NA
Methylcyclohexane							< 0.0042 UJ	NA	NA	NA	NA	NA	NA	NA	NA	NA	NA	NA	NA
Methylene chloride			960	56	0.0013	0.0025	< 0.0042 U	NA	NA	NA	NA	NA	NA	NA	NA	NA	NA	NA	NA
Styrene			36000	6300	0.11	1.2	< 0.0042 U	NA	NA	NA	NA	NA	NA	NA	NA	NA	NA	NA	NA
tert-Butyl methyl ether			220	43		0.0028	< 0.0042 U	NA	NA	NA	NA	NA	NA	NA	NA	NA	NA	NA	NA
Tetrachloroethene			110	22	0.0023	0.0044	< 0.0042 U	NA	NA	NA	NA	NA	NA	NA	NA	NA	NA	NA	NA
Toluene			45000	5000	0.69	0.59	< 0.0042 U	NA	NA	NA	NA	NA	NA	NA	NA	NA	NA	NA	NA
trans-1,2-Dichloroethene			690	150	0.029	0.025	< 0.0042 U	NA	NA	NA	NA	NA	NA	NA	NA	NA	NA	NA	NA
trans-1,3-Dichloropropene							< 0.0042 U	NA	NA	NA	NA	NA	NA	NA	NA	NA	NA	NA	NA
Trichloroethene			6.4	0.91	0.0018	0.00016	< 0.0042 U	NA	NA	NA	NA	NA	NA	NA	NA	NA	NA	NA	NA
Vinyl chloride			1.7	0.06	0.00069	0.0000053	< 0.0042 UJ	NA	NA	NA	NA	NA	NA	NA	NA	NA	NA	NA	NA
Xylenes (total)			2700	630	9.8	0.19	< 0.0042 U	NA	NA	NA	NA	NA	NA	NA	NA	NA	NA	NA	NA
SVOCs - USEPA Method 8270 (mg/kg)																			
1,1'-Biphenyl			210	51		0.0087	< 0.075 U	< 0.073 U	< 0.075 U	< 0.073 U	< 0.073 U	< 0.072	< 0.075	< 0.071	< 0.071	**0.012**	< 0.072	< 0.069 U	< 0.070 U
2,4,5-Trichlorophenol			62000	6100		3.3	< 0.075 U	< 0.073 U	< 0.075 U	< 0.073 U	< 0.073 U	< 0.072	< 0.075	< 0.071	< 0.071	< 0.070	< 0.072	< 0.069 U	< 0.070 U
2,4,6-Trichlorophenol			160	44		0.013	< 0.075 U	< 0.073 U	< 0.075 U	< 0.073 U	< 0.073 U	< 0.072	< 0.075	< 0.071	< 0.071	< 0.070	< 0.072	< 0.069 U	< 0.070 U
2,4-Dichlorophenol			1800	180		0.041	< 0.075 U	< 0.073 U	< 0.075 U	< 0.073 U	< 0.073 U	< 0.072	< 0.075	< 0.071	< 0.071	< 0.070	< 0.072	< 0.069 U	< 0.070 U
2,4-Dimethylphenol			12000	1200		0.32	< 0.075 U	< 0.073 U	< 0.075 U	< 0.073 U	< 0.073 U	< 0.072	< 0.075	< 0.071	< 0.071	< 0.070	< 0.072	< 0.069 U	< 0.070 U
2,4-Dinitrophenol			1200	120		0.034	< 0.37 U	< 0.360 U	< 0.370 U	< 0.360 U	< 0.360 U	< 0.350	< 0.370	< 0.350	< 0.350	< 0.350	< 0.350	< 0.340 U	< 0.340 U
2,4-Dinitrotoluene			5.5	1.6		0.00028	< 0.15 U	< 0.140 U	< 0.140 U	< 0.140 U	< 0.140 U	< 0.140	< 0.150	< 0.140	< 0.140	< 0.140	< 0.140	< 0.130 U	< 0.130 U
2,6-Dinitrotoluene			620	61		0.02	< 0.15 U	< 0.140 U	< 0.140 U	< 0.140 U	< 0.140 U	< 0.140	< 0.150	< 0.140	< 0.140	< 0.140	< 0.140	< 0.130 U	< 0.130 U
2-Chloronaphthalene			82000	6300		2.9	< 0.075 U	< 0.073 U	< 0.075 U	< 0.073 U	< 0.073 U	< 0.072	< 0.075	< 0.071	< 0.071	< 0.070	< 0.072	< 0.069 U	< 0.070 U
2-Chlorophenol			5100	390		0.057	< 0.075 U	< 0.073 U	< 0.075 U	< 0.073 U	< 0.073 U	< 0.072	< 0.075	< 0.071	< 0.071	< 0.070	< 0.072	< 0.069 U	< 0.070 U
2-Methyl-4,6-dinitrophenol			49	4.9		0.002	< 0.37 U	< 0.360 U	< 0.370 U	< 0.360 U	< 0.360 U	< 0.350	< 0.370	< 0.350	< 0.350	< 0.350	< 0.350	< 0.340 U	< 0.340 U
2-Methylnaphthalene			2200	230		0.14	< 0.075 U	< 0.073 U	< 0.075 U	< 0.073 U	< 0.073 U	< 0.072	< 0.075	< 0.071	< 0.071	**0.015**	**0.018**	< 0.069 U	< 0.070 U
2-Methylphenol			31000	3100		0.58	< 0.075 U	< 0.073 U	< 0.075 U	< 0.073 U	< 0.073 U	< 0.072	< 0.075	< 0.071	< 0.071	< 0.070	< 0.072	< 0.069 U	< 0.070 U
2-Nitrobenzenamine			6000	610		0.062	< 0.15 U	< 0.140 U	< 0.140 U	< 0.140 U	< 0.140 U	< 0.140	< 0.150	< 0.140	< 0.140	< 0.140	< 0.140	< 0.130 U	< 0.130 U
2-Nitrophenol							< 0.15 U	< 0.140 U	< 0.140 U	< 0.140 U	< 0.140 U	< 0.140	< 0.150	< 0.140	< 0.140	< 0.140	< 0.140	< 0.130 U	< 0.130 U
3,3'-Dichlorobenzidine			3.8	1.1		0.00071	< 0.37 U	< 0.360 U	< 0.370 U	< 0.360 U	< 0.360 U	< 0.350	< 0.370	< 0.350	< 0.350	< 0.350	< 0.350	< 0.340 U	< 0.340 U
3-Nitrobenzenamine							< 0.15 U	< 0.140 U	< 0.140 U	< 0.140 U	< 0.140 U	< 0.140	< 0.150	< 0.140	< 0.140	< 0.140	< 0.140	< 0.130 U	< 0.130 U
4-Bromophenyl phenyl ether							< 0.075 U	< 0.073 U	< 0.075 U	< 0.073 U	< 0.073 U	< 0.072	< 0.075	< 0.071	< 0.071	< 0.070	< 0.072	< 0.069 U	< 0.070 U
4-Chloro-3-methylphenol			62000	6100		1.3	< 0.075 U	< 0.073 U	< 0.075 U	< 0.073 U	< 0.073 U	< 0.072	< 0.075	< 0.071	< 0.071	< 0.070	< 0.072	< 0.069 U	< 0.070 U

Footnotes appear on last page.

Table 4-6
2010 and 2011 Soil Analytical Data
SWMU 39
Fort Stewart, Georgia

						Location ID	F39SB012	FS39SB013	FS39SB013	FS39SB014	FS39SB014	F39SB015	F39SB015	F39SB016	F39SB016	F39SB017	F39SB017	G4MW053	G4MW053
						Sample Date	3/16/2010	4/27/2011	4/27/2011	4/27/2011	4/27/2011	5/19/2011	5/19/2011	5/19/2011	5/19/2011	5/19/2011	5/19/2011	4/27/2011	4/27/2011
						Depth (ft bls)	3-3.5	0.5-1	3-3.5	0.5-1	3-3.5	0.5-1	3-3.5	0.5-1	3-3.5	0.5-1	3-3.5	0.5-1	3-3.5
Chemical Name	Surface BK	Subsurface BK	Industrial Soil RSL	Resident Soil RSL	MCL based SSL	Risk based SSL													
SVOCs - USEPA Method 8270 (mg/kg)																			
4-Chlorobenzenamine			8.6	2.4		0.00013	< 0.075 U	< 0.073 U	< 0.075 U	< 0.073 U	< 0.073 U	**0.068**	**0.023**	**0.015**	< 0.071	< 0.070	< 0.072	< 0.069 U	< 0.070 U
4-Chlorophenyl phenyl ether							< 0.075 U	< 0.073 U	< 0.075 U	< 0.073 U	< 0.073 U	< 0.072	< 0.075	< 0.071	< 0.071	< 0.070	< 0.072	< 0.069 U	< 0.070 U
4-Methylphenol			62000	6100		1.1	< 0.15 U	< 0.140 U	< 0.140 U	< 0.140 U	< 0.140 U	< 0.140	< 0.150	< 0.140	< 0.140	< 0.140	< 0.140	< 0.130 U	< 0.130 U
4-Nitrobenzenamine			86	24		0.0014	< 0.15 U	< 0.140 U	< 0.140 U	< 0.140 U	< 0.140 U	< 0.140	< 0.150	< 0.140	< 0.140	< 0.140	< 0.140	< 0.130 U	< 0.130 U
4-Nitrophenol							< 0.37 U	< 0.360 U	< 0.370 U	< 0.360 U	< 0.360 U	< 0.350	< 0.370	< 0.350	< 0.350	< 0.350	< 0.350	< 0.340 U	< 0.340 U
Acenaphthene			33000	3400		4.1	< 0.075 U	**0.020 J**	< 0.075 U	< 0.073 U	< 0.073 U	< 0.072	< 0.075	< 0.071	< 0.071	< 0.070	< 0.072	< 0.069 U	< 0.070 U
Acenaphthylene							< 0.075 U	**0.12**	**0.2**	**0.029 J**	< 0.073 U	< 0.072	< 0.075	< 0.071	< 0.071	**0.066**	**0.2**	< 0.069 U	< 0.070 U
Acetophenone			100000	7800		0.45	< 0.075 U	< 0.073 U	< 0.075 U	< 0.073 U	< 0.073 U	< 0.072	< 0.075	< 0.071	< 0.071	< 0.070	< 0.072	< 0.069 U	< 0.070 U
Anthracene			170000	17000		42	< 0.075 U	**0.071 J**	**0.089**	**0.015 J**	< 0.073 U	< 0.072	< 0.075	< 0.071	< 0.071	**0.031**	**0.069**	< 0.069 U	< 0.070 U
Atrazine			7.5	2.1	0.0019	0.00017	< 0.075 U	< 0.073 U	< 0.075 U	< 0.073 U	< 0.073 U	< 0.072	< 0.075	< 0.071	< 0.071	< 0.070	< 0.072	< 0.069 U	< 0.070 U
Benz(a)anthracene			2.1	0.15		0.01	< 0.075 U	**0.25**	**0.43**	**0.088**	< 0.073 U	< 0.072	< 0.075	< 0.071	< 0.071	**0.07**	**0.32**	< 0.069 U	< 0.070 U
Benzaldehyde			100000	7800		0.33	< 0.075 U	< 0.073 U	< 0.075 U	< 0.073 U	< 0.073 U	< 0.072	< 0.075	< 0.071	< 0.071	< 0.070	< 0.072	< 0.069 U	< 0.070 U
Benzo(a)pyrene			0.21	0.015	0.24	0.0035	< 0.075 U	**0.42**	**0.68**	**0.073**	**0.013 J**	< 0.072	< 0.075	**0.011**	< 0.071	**0.091**	**0.43**	< 0.069 U	< 0.070 U
Benzo(b)fluoranthene			2.1	0.15		0.035	< 0.075 U	**0.5**	**0.79**	**0.097**	**0.014 J**	< 0.072	< 0.075	**0.015**	< 0.071	**0.14**	**0.48**	< 0.069 U	< 0.070 U
Benzo(ghi)perylene							< 0.075 U	**0.25**	**0.37**	**0.041 J**	< 0.073 U	< 0.072	< 0.075	< 0.071	< 0.071	**0.089**	**0.2**	< 0.069 U	< 0.070 U
Benzo(k)fluoranthene			21	1.5		0.35	< 0.075 U	**0.27**	**0.44**	**0.046 J**	**0.011 J**	< 0.072	< 0.075	< 0.071	< 0.071	**0.05**	**0.25**	< 0.069 U	< 0.070 U
Bis(2-chloroethoxy)methane			1800	180		0.011	< 0.075 U	< 0.073 U	< 0.075 U	< 0.073 U	< 0.073 U	< 0.072	< 0.075	< 0.071	< 0.071	< 0.070	< 0.072	< 0.069 U	< 0.070 U
Bis(2-chloroethyl) ether			1	0.21		0.0000031	< 0.075 U	< 0.073 U	< 0.075 U	< 0.073 U	< 0.073 U	< 0.072	< 0.075	< 0.071	< 0.071	< 0.070	< 0.072	< 0.069 U	< 0.070 U
Bis(2-chloroisopropyl) ether			22	4.6		0.00011	< 0.075 U	< 0.073 U	< 0.075 U	< 0.073 U	< 0.073 U	< 0.072	< 0.075	< 0.071	< 0.071	< 0.070	< 0.072	< 0.069 U	< 0.070 U
Bis(2-ethylhexyl)phthalate			120	35	1.4	1.1	< 0.075 U	< 0.073 U	< 0.075 U	< 0.073 U	< 0.073 U	< 0.072	< 0.075	< 0.071	< 0.071	< 0.070	< 0.072	< 0.069 U	< 0.070 U
Butyl benzyl phthalate			910	260		0.2	< 0.15 U	< 0.140 U	< 0.140 U	< 0.140 U	< 0.140 U	< 0.140	< 0.150	< 0.140	< 0.140	< 0.140	< 0.140	< 0.130 U	< 0.130 U
Caprolactam			310000	31000		1.9	< 0.075 U	< 0.073 U	< 0.075 U	< 0.073 U	< 0.073 U	< 0.072	< 0.075	< 0.071	< 0.071	< 0.070	< 0.072	< 0.069 U	< 0.070 U
Carbazole							< 0.075 U	< 0.073 U	< 0.075 U	< 0.073 U	< 0.073 U	< 0.072	< 0.075	< 0.071	< 0.071	< 0.070	< 0.072	< 0.069 U	< 0.070 U
Chrysene			210	15		1.1	< 0.075 U	**0.31**	**0.57**	**0.094**	< 0.073 U	< 0.072	< 0.075	< 0.071	< 0.071	**0.1**	**0.41**	< 0.069 U	< 0.070 U
Dibenz(a,h)anthracene			0.21	0.015		0.011	< 0.075 U	**0.068 J**	**0.1**	**0.012 J**	< 0.073 U	< 0.072	< 0.075	< 0.071	< 0.071	**0.019**	**0.05**	< 0.069 U	< 0.070 U
Dibenzofuran			1000	78		0.11	< 0.075 U	< 0.073 U	< 0.075 U	< 0.073 U	< 0.073 U	< 0.072	< 0.075	< 0.071	< 0.071	< 0.070	< 0.072	< 0.069 U	< 0.070 U
Diethyl phthalate			490000	49000		4.7	< 0.075 U	< 0.073 U	< 0.075 U	< 0.073 U	< 0.073 U	< 0.072	< 0.075	< 0.071	< 0.071	< 0.070	< 0.072	< 0.069 U	< 0.070 U
Dimethyl phthalate							< 0.075 U	< 0.073 U	< 0.075 U	< 0.073 U	< 0.073 U	< 0.072	< 0.075	< 0.071	< 0.071	< 0.070	< 0.072	< 0.069 U	< 0.070 U
Di-n-butyl phthalate			62000	6100		1.7	< 0.075 U	< 0.073 U	< 0.075 U	< 0.073 U	< 0.073 U	< 0.072	< 0.075	< 0.071	< 0.071	< 0.070	< 0.072	< 0.069 U	< 0.070 U
Di-n-octylphthalate			7400	730		53	< 0.075 U	< 0.073 U	< 0.075 U	< 0.073 U	< 0.073 U	< 0.072	< 0.075	< 0.071	< 0.071	< 0.070	< 0.072	< 0.069 U	< 0.070 U
Fluoranthene			22000	2300		70	< 0.075 U	**0.15**	**0.23**	**0.079**	< 0.073 U	< 0.072	< 0.075	**0.013**	< 0.071	**0.12**	**0.13**	< 0.069 U	< 0.070 U
Fluorene			22000	2300		4	< 0.075 U	**0.11**	**0.011 J**	< 0.073 U	< 0.073 U	< 0.072	< 0.075	< 0.071	< 0.071	< 0.070	< 0.072	< 0.069 U	< 0.070 U
Hexachlorobenzene			1.1	0.3	0.013	0.00053	< 0.075 U	< 0.073 U	< 0.075 U	< 0.073 U	< 0.073 U	< 0.072	< 0.075	< 0.071	< 0.071	< 0.070	< 0.072	< 0.069 U	< 0.070 U
Hexachlorobutadiene			22	6.2		0.0005	< 0.075 U	< 0.073 U	< 0.075 U	< 0.073 U	< 0.073 U	< 0.072	< 0.075	< 0.071	< 0.071	< 0.070	< 0.072	< 0.069 U	< 0.070 U
Hexachlorocyclopentadiene			3700	370	0.16	0.07	< 0.37 U	< 0.360 U	< 0.370 U	< 0.360 U	< 0.360 U	< 0.350	< 0.370	< 0.350	< 0.350	< 0.350	< 0.350	< 0.340 U	< 0.340 U
Hexachloroethane			43	12		0.00048	< 0.075 U	< 0.073 U	< 0.075 U	< 0.073 U	< 0.073 U	< 0.072	< 0.075	< 0.071	< 0.071	< 0.070	< 0.072	< 0.069 U	< 0.070 U
Indeno(1,2,3-cd)pyrene			2.1	0.15		0.2	< 0.075 U	**0.22**	**0.33**	**0.036 J**	< 0.073 U	< 0.072	< 0.075	< 0.071	< 0.071	**0.062**	**0.16**	< 0.069 U	< 0.070 U
Isophorone			1800	510		0.022	< 0.075 U	< 0.073 U	< 0.075 U	< 0.073 U	< 0.073 U	< 0.072	< 0.075	< 0.071	< 0.071	< 0.070	< 0.072	< 0.069 U	< 0.070 U
Naphthalene			18	3.6		0.00047	< 0.075 U	< 0.073 U	< 0.075 U	< 0.073 U	< 0.073 U	< 0.072	< 0.075	< 0.071	< 0.071	< 0.070	**0.011**	< 0.069 U	< 0.070 U
Nitrobenzene			24	4.8		0.000079	< 0.075 U	< 0.073 U	< 0.075 U	< 0.073 U	< 0.073 U	< 0.072	< 0.075	< 0.071	< 0.071	< 0.070	< 0.072	< 0.069 U	< 0.070 U
N-Nitroso-di-n-propylamine			0.25	0.069		0.000007	< 0.075 U	< 0.073 U	< 0.075 U	< 0.073 U	< 0.073 U	< 0.072	< 0.075	< 0.071	< 0.071	< 0.070	< 0.072	< 0.069 U	< 0.070 U
N-Nitrosodiphenylamine			350	99		0.057	< 0.075 U	< 0.073 U	< 0.075 U	< 0.073 U	< 0.073 U	< 0.072	< 0.075	< 0.071	< 0.071	< 0.070	< 0.072	< 0.069 U	< 0.070 U
Pentachlorophenol			2.7	0.89	0.01	0.00036	< 0.37 U	< 0.360 U	< 0.370 U	< 0.360 U	< 0.360 U	< 0.350	< 0.370	< 0.350	< 0.350	< 0.350	< 0.350	< 0.340 U	< 0.340 U
Phenanthrene							< 0.075 U	**0.21**	< 0.075 U	< 0.073 U	< 0.073 U	< 0.072	< 0.075	< 0.071	< 0.071	**0.052**	**0.031**	< 0.069 U	< 0.070 U
Phenol			180000	18000		2.6	< 0.075 U	< 0.073 U	< 0.075 U	< 0.073 U	< 0.073 U	< 0.072	< 0.075	< 0.071	< 0.071	< 0.070	< 0.072	< 0.069 U	< 0.070 U
Pyrene			17000	1700		9.5	< 0.075 U	**0.35**	**0.61**	**0.14**	< 0.073 U	< 0.072	< 0.075	**0.019**	< 0.071	**0.14**	**0.26**	< 0.069 U	< 0.070 U
Metals - USEPA Method 6010/7470 (mg/kg)																			
Arsenic	2.1	8.04	1.6	0.39	0.29	0.0013	< 0.56 U	NA	NA	NA	NA	NA	NA	NA	NA	NA	NA	NA	NA
Barium	14.7	17	190000	15000	82	120	**19**	NA	NA	NA	NA	NA	NA	NA	NA	NA	NA	NA	NA
Cadmium	0.18	0.24	800	70	0.38	0.52	0.038 UB	NA	NA	NA	NA	NA	NA	NA	NA	NA	NA	NA	NA
Chromium	6.21	11.6			180000		**7.8**	NA	NA	NA	NA	NA	NA	NA	NA	NA	NA	NA	NA
Lead	8.81	11.1	800	400	14		**7.5**	NA	NA	NA	NA	NA	NA	NA	NA	NA	NA	NA	NA
Selenium	0.41	1.12	5100	390	0.26	0.4	0.65 UB	NA	NA	NA	NA	NA	NA	NA	NA	NA	NA	NA	NA
Silver	0.15	0.46	5100	390		0.6	< 0.28 U	NA	NA	NA	NA	NA	NA	NA	NA	NA	NA	NA	NA
Mercury	0.03	0.05	43	10	0.1	0.033	**0.096**	NA	NA	NA	NA	NA	NA	NA	NA	NA	NA	NA	NA

Notes:

Surface BK = Surface Soil Background Results, Phase II RFI for 16 SWMUs at Fort Stewart, SAIC, 2000.

Subsurface BK = Surface Soil Background Results, Phase II RFI for 16 SWMUs at Fort Stewart, SAIC, 2000.

All screening levels listed from USEPA as of November 2012

Residential Soil RSL are used to screen surface soil samples collected between 0-2 ft bgs.

Industrial Soil RSL and Risk-Based SSL are used to screen subsurface soil samples collected from greater than 2 ft bgs

Surface soil samples (soil between 0 to 2 ft bgs) exceeding the surface background are screened against the USEPA residential soil RSL and MCL based SSL. If no MCL based SSL is established, then the soil samples are screened against the risk based SSL.

Subsurface soil samples (soil collected > 2 ft bgs) exceeding the subsurface background are screened against the USEPA industrial soil RSL and MCL based SSL. If no MCL based SSL is established, then the soil samples are screened against the risk based SSL.

All exceedances are highlighted according to applicable standard.

U - Constituent concentration was qualified as nondetect.

J - Constituent concentration was estimated

B - Constituent was detected in an associated blank sample.

Table 4-7
April 2010 Surface Water Field Parameters
SWMU-39
Fort Stewart, Georgia

Location ID	Temperature (°C)	pH	Specific Conductance (uS/cm)	Dissolved Oxygen (mg/L)	Oxidation-Reduction Potential (mV)	Flow Velocity (fps)
SW-01	18.95	4.15	233	7.64	175.6	0.17
SW-02	24.39	3.84	214	8.72	169.3	0.17
SW-03	24.24	3.61	211	8.11	169.9	0.11
SW-04	25.57	3.51	535	5.48	211.3	0.03
SW-05	26.78	3.28	254	7.62	268.5	0.04
SW-06	25.72	3.07	0.301	5.64	306.6	0.03
SW-07	24.71	2.99	0.355	5.58	338.9	0.03

Notes:
Location SW-08 was dry.
°C = degrees Celsius.
uS/cm = microSeimens per centimeter.
mg/L = milligrams per Liter.
mV = millivolts
fps = feet per second.

Table 4-8
April 2010 Surface Water Analytical Data
SWMU 39
Fort Stewart, Georgia

		Location ID	F39SW-01	F39SW-01-DUP	F39SW-02	F39SW-03	F39SW-04	F39SW-05	F39SW-06	F39SW-07
		Sample Date	4/8/2010	4/8/2010	4/8/2010	4/8/2010	4/8/2010	4/8/2010	4/8/2010	4/8/2010
Chemical Name	Tapwater RSL[2]	IWQS [1]								
VOCs - USEPA Method 8260 (µg/L)										
1,1,1-Trichloroethane	7500		< 0.5 U	< 0.5 U	< 0.5 U	< 0.5 U	< 0.5 U	< 0.5 U	< 0.5 U	< 0.5 U
1,1,2,2-Tetrachloroethane	0.066	4	< 0.5 U	< 0.5 U	< 0.5 U	< 0.5 U	< 0.5 U	< 0.5 U	< 0.5 U	< 0.5 U
1,1,2-Trichloro-1,2,2-Trifluoroethane	53000		< 0.5 U	< 0.5 U	< 0.5 U	< 0.5 U	< 0.5 U	< 0.5 U	< 0.5 U	< 0.5 U
1,1,2-Trichloroethane	0.24	16	< 0.5 U	< 0.5 U	< 0.5 U	< 0.5 U	< 0.5 U	< 0.5 U	< 0.5 U	< 0.5 U
1,1-Dichloroethane	2.4		< 0.5 U	< 0.5 U	< 0.5 U	< 0.5 U	< 0.5 U	< 0.5 U	< 0.5 U	< 0.5 U
1,1-Dichloroethene	260	7100	< 0.5 U	< 0.5 U	< 0.5 U	< 0.5 U	< 0.5 U	< 0.5 U	< 0.5 U	< 0.5 U
1,2,4-Trichlorobenzene	0.99	70	< 0.5 U	< 0.5 U	< 0.5 U	< 0.5 U	< 0.5 U	< 0.5 U	< 0.5 U	< 0.5 U
1,2-Dibromo-3-chloropropane (DBCP)	0.00032		< 0.5 U	< 0.5 U	< 0.5 U	< 0.5 U	< 0.5 U	< 0.5 U	< 0.5 U	< 0.5 U
1,2-Dibromoethane	0.0065		< 0.5 U	< 0.5 U	< 0.5 U	< 0.5 U	< 0.5 U	< 0.5 U	< 0.5 U	< 0.5 U
1,2-Dichlorobenzene	280	1300	< 0.5 U	< 0.5 U	< 0.5 U	< 0.5 U	< 0.5 U	< 0.5 U	< 0.5 U	< 0.5 U
1,2-Dichloroethane	0.15	37	< 0.5 U	< 0.5 U	< 0.5 U	< 0.5 U	< 0.5 U	< 0.5 U	< 0.5 U	< 0.5 U
1,2-Dichloropropane	0.38	15	< 0.5 U	< 0.5 U	< 0.5 U	< 0.5 U	< 0.5 U	< 0.5 U	< 0.5 U	< 0.5 U
1,3-Dichlorobenzene		960	< 0.5 U	< 0.5 U	< 0.5 U	< 0.5 U	< 0.5 U	< 0.5 U	< 0.5 U	< 0.5 U
1,4-Dichlorobenzene	0.42	190	< 0.5 U	< 0.5 U	< 0.5 U	< 0.5 U	< 0.5 U	< 0.5 U	< 0.5 U	< 0.5 U
2-Butanone	4900		< 10 U	< 10 U	< 10 U	< 10 U	< 10 U	< 10 U	< 10 U	< 10 U
2-Hexanone	34		< 10 U	< 10 U	< 10 U	< 10 U	< 10 U	< 10 U	< 10 U	< 10 U
4-Methyl-2-pentanone	1000		< 10 U	< 10 U	< 10 U	< 10 U	< 10 U	< 10 U	< 10 U	< 10 U
Acetone	12000		1.7 UB	**3.1 J**	4 UB	5.9 UB	3.8 UB	7.5 UB	**14**	7.6 UB
Benzene	0.39	51	< 0.5 U	< 0.5 U	< 0.5 U	< 0.5 U	< 0.5 U	< 0.5 U	< 0.5 U	< 0.5 U
Benzene, 1-methylethyl	390		< 0.5 U	< 0.5 U	< 0.5 U	< 0.5 U	< 0.5 U	< 0.5 U	< 0.5 U	< 0.5 U
Bromodichloromethane	0.12	17	< 0.5 U	< 0.5 U	< 0.5 U	< 0.5 U	< 0.5 U	< 0.5 U	< 0.5 U	< 0.5 U
Bromoform	7.9	140	< 0.5 U	< 0.5 U	< 0.5 U	< 0.5 U	< 0.5 U	< 0.5 U	< 0.5 U	< 0.5 U
Bromomethane	7	1500	< 0.5 UJ	< 0.5 UJ	< 0.5 UJ	< 0.5 UJ	< 0.5 UJ	< 0.5 UJ	< 0.5 UJ	< 0.5 UJ
Carbon disulfide	720		< 0.5 U	< 0.5 U	< 0.5 U	< 0.5 U	< 0.5 U	< 0.5 U	< 0.5 U	< 0.5 U
Carbon tetrachloride	0.39	1.6	< 0.5 U	< 0.5 U	< 0.5 U	< 0.5 U	< 0.5 U	< 0.5 U	< 0.5 U	< 0.5 U
CFC-11	1100		< 0.5 U	< 0.5 U	< 0.5 U	< 0.5 U	< 0.5 U	< 0.5 U	< 0.5 U	< 0.5 U
CFC-12	190		< 0.5 U	< 0.5 U	< 0.5 U	< 0.5 U	< 0.5 U	< 0.5 U	< 0.5 U	< 0.5 U
Chlorobenzene	72	1600	< 0.5 U	< 0.5 U	< 0.5 U	< 0.5 U	< 0.5 U	< 0.5 U	< 0.5 U	< 0.5 U
Chloroethane	21000		< 0.5 U	< 0.5 U	< 0.5 U	< 0.5 U	< 0.5 U	< 0.5 U	< 0.5 U	< 0.5 U
Chloroform	0.19	470	< 0.5 U	< 0.5 U	< 0.5 U	< 0.5 U	< 0.5 U	< 0.5 U	< 0.5 U	< 0.5 U
Chloromethane	190		< 0.5 U	< 0.5 U	< 0.5 U	< 0.5 U	< 0.5 U	< 0.5 U	< 0.5 U	< 0.5 U
cis-1,2-Dichloroethene	28		**1.1**	**0.4 J**	**0.86**	**1.1**	**0.43 J**	**0.74**	**0.23 J**	**0.63**
cis-1,3-Dichloropropene			< 0.5 U	< 0.5 U	< 0.5 U	< 0.5 U	< 0.5 U	< 0.5 U	< 0.5 U	< 0.5 U
Cyclohexane	13000		< 0.5 U	< 0.5 U	< 0.5 U	< 0.5 U	< 0.5 U	< 0.5 U	< 0.5 U	< 0.5 U
Dibromochloromethane	0.15	13	< 0.5 U	< 0.5 U	< 0.5 U	< 0.5 U	< 0.5 U	< 0.5 U	< 0.5 U	< 0.5 U
Ethylbenzene	1.3	2100	< 0.5 U	< 0.5 U	< 0.5 U	< 0.5 U	< 0.5 U	< 0.5 U	< 0.5 U	< 0.5 U
Methyl acetate	16000		< 1 U	< 1 U	< 1 U	< 1 U	< 1 U	< 1 U	< 1 U	< 1 U
Methylcyclohexane			< 5 U	< 5 U	< 5 U	< 5 U	< 5 U	< 5 U	< 5 U	< 5 U
Methylene chloride	9.9	590	0.23 UB	**0.21 J**	0.22 UB	0.2 UB	0.22 UB	0.25 UB	0.21 UB	0.22 UB
Styrene	1100		< 0.5 U	< 0.5 U	< 0.5 U	< 0.5 U	< 0.5 U	< 0.5 U	< 0.5 U	< 0.5 U
tert-Butyl methyl ether	12		< 0.5 U	< 0.5 U	< 0.5 U	< 0.5 U	< 0.5 U	< 0.5 U	< 0.5 U	< 0.5 U
Tetrachloroethene	9.7	3.3	**0.12 J**	**1**	**0.14 J**	**0.21 J**	**1.1**	**1.3**	**0.61**	**0.81**
Toluene	860	5980	< 0.5 U	< 0.5 U	< 0.5 U	< 0.5 U	< 0.5 U	< 0.5 U	< 0.5 U	< 0.5 U
trans-1,2-Dichloroethene	86	10000	**0.11 J**	< 0.5 U	< 0.5 U	< 0.5 U	< 0.5 U	< 0.5 U	< 0.5 U	**0.1 J**
trans-1,3-Dichloropropene			< 0.5 U	< 0.5 U	< 0.5 U	< 0.5 U	< 0.5 U	< 0.5 U	< 0.5 U	< 0.5 U
Trichloroethene	0.44	30	**1.5 J**	**4.3 J**	**1.5**	**2**	**4.5**	**4.8**	**2.3**	**3.3**
Vinyl chloride	0.015	2.4	< 0.5 U	< 0.5 U	< 0.5 U	< 0.5 U	< 0.5 U	< 0.5 U	< 0.5 U	< 0.5 U
Xylenes (total)	190		< 0.5 U	< 0.5 U	< 0.5 U	< 0.5 U	< 0.5 U	< 0.5 U	< 0.5 U	< 0.5 U

Footnotes appear on last page

Table 4-8
April 2010 Surface Water Analytical Data
SWMU 39
Fort Stewart, Georgia

		Location ID	F39SW-01	F39SW-01-DUP	F39SW-02	F39SW-03	F39SW-04	F39SW-05	F39SW-06	F39SW-07
		Sample Date	4/8/2010	4/8/2010	4/8/2010	4/8/2010	4/8/2010	4/8/2010	4/8/2010	4/8/2010
Chemical Name	Tapwater RSL[2]	IWQS [1]								
SVOCs - USEPA Method 8270 (µg/L)										
1,1'-Biphenyl	0.83		< 1 U	< 1 U	< 1 U	< 1 U	< 1 U	< 1 U	< 1 U	< 1 U
2,4,5-Trichlorophenol	890		< 1 U	< 1 U	< 1 U	< 1 U	< 1 U	< 1 U	< 1 U	< 1 U
2,4,6-Trichlorophenol	3.5	2.4	< 1 U	< 1 U	< 1 U	< 1 U	< 1 U	< 1 U	< 1 U	< 1 U
2,4-Dichlorophenol	35	290	< 1 U	< 1 U	< 1 U	< 1 U	< 1 U	< 1 U	< 1 U	< 1 U
2,4-Dimethylphenol	270	850	< 1 U	< 1 U	< 1 U	< 1 U	< 1 U	< 1 U	< 1 U	< 1 U
2,4-Dinitrophenol	30	5300	< 5 U	< 5 U	< 5 U	< 5 U	< 5 U	< 5 U	< 5 U	< 5 U
2,4-Dinitrotoluene	0.2	3.4	< 2 U	< 2 U	< 2 U	< 2 U	< 2 U	< 2 U	< 2 U	< 2 U
2,6-Dinitrotoluene	15		< 2 U	< 2 U	< 2 U	< 2 U	< 2 U	< 2 U	< 2 U	< 2 U
2-Chloronaphthalene	550	1600	< 1 U	< 1 U	< 1 U	< 1 U	< 1 U	< 1 U	< 1 U	< 1 U
2-Chlorophenol	71	150	< 1 UJ	< 1 U	< 1 U	< 1 U	< 1 U	< 1 U	< 1 U	< 1 U
2-Methyl-4,6-dinitrophenol	1.2	280	< 5 U	< 5 U	< 5 U	< 5 U	< 5 U	< 5 U	< 5 U	< 5 U
2-Methylnaphthalene	27		< 1 U	< 1 U	< 1 U	< 1 U	< 1 U	< 1 U	< 1 U	< 1 U
2-Methylphenol	720		< 1 U	< 1 U	< 1 U	< 1 U	< 1 U	< 1 U	< 1 U	< 1 U
2-Nitrobenzenamine	150		< 2 U	< 2 U	< 2 U	< 2 U	< 2 U	< 2 U	< 2 U	< 2 U
2-Nitrophenol			< 2 U	< 2 U	< 2 U	< 2 U	< 2 U	< 2 U	< 2 U	< 2 U
3,3'-Dichlorobenzidine	0.11	0.028	< 5 U	< 5 U	< 5 U	< 5 U	< 5 U	< 5 U	< 5 U	< 5 U
3-Nitrobenzenamine			< 2 R	< 2 U	< 2 U	< 2 U	< 2 U	< 2 U	< 2 U	< 2 U
4-Bromophenyl phenyl ether			< 1 UJ	< 1 UJ	< 1 UJ	< 1 UJ	< 1 UJ	< 1 UJ	< 1 UJ	< 1 UJ
4-Chloro-3-methylphenol	1100		< 1 U	< 1 U	< 1 U	< 1 U	< 1 U	< 1 U	< 1 U	< 1 U
4-Chlorobenzenamine	0.32		< 1 R	< 1 U	< 1 U	< 1 U	< 1 U	< 1 U	< 1 U	< 1 U
4-Chlorophenyl phenyl ether			< 1 U	< 1 U	< 1 U	< 1 U	< 1 U	< 1 U	< 1 U	< 1 U
4-Methylphenol	1400		< 2 U	< 2 U	< 2 U	< 2 U	< 2 U	< 2 U	< 2 U	< 2 U
4-Nitrobenzenamine	3.3		< 2 UJ	< 2 U	< 2 U	< 2 U	< 2 U	< 2 U	< 2 U	< 2 U
4-Nitrophenol			< 5 U	< 5 U	< 5 U	< 5 U	< 5 U	< 5 U	< 5 U	< 5 U
Acenaphthene	400	990	< 1 UJ	< 1 UJ	< 1 UJ	< 1 UJ	< 1 UJ	< 1 UJ	< 1 UJ	< 1 UJ
Acenaphthylene			< 1 U	< 1 U	< 1 U	< 1 U	< 1 U	< 1 U	< 1 U	< 1 U
Acetophenone	1500	3700	< 1 U	< 1 U	< 1 U	< 1 U	< 1 U	< 1 U	< 1 U	< 1 U
Anthracene	1300	40000	< 1 UJ	< 1 UJ	< 1 UJ	< 1 UJ	< 1 UJ	< 1 UJ	< 1 UJ	< 1 UJ
Atrazine	0.26		< 1 U	< 1 U	< 1 U	< 1 U	< 1 U	< 1 U	< 1 U	< 1 U
Benz(a)anthracene	0.029	0.018	< 1 UJ	< 1 UJ	< 1 UJ	< 1 UJ	< 1 UJ	< 1 UJ	< 1 UJ	< 1 UJ
Benzaldehyde	1500		< 5 U	< 5 U	< 5 U	< 5 U	< 5 U	< 5 U	< 5 U	< 5 U
Benzo(a)pyrene	0.0029	0.018	< 1 UJ	< 1 UJ	< 1 UJ	< 1 UJ	< 1 UJ	< 1 UJ	< 1 UJ	< 1 UJ
Benzo(b)fluoranthene	0.029	0.018	< 1 UJ	< 1 UJ	< 1 UJ	< 1 UJ	< 1 UJ	< 1 UJ	< 1 UJ	< 1 UJ
Benzo(ghi)perylene			< 1 UJ	< 1 UJ	< 1 UJ	< 1 UJ	< 1 UJ	< 1 UJ	< 1 UJ	< 1 UJ
Benzo(k)fluoranthene	0.29	0.018	< 1 UJ	< 1 U	< 1 U	< 1 U	< 1 U	< 1 U	< 1 U	< 1 U
Bis(2-chloroethoxy)methane	46		< 1 UJ	< 1 U	< 1 U	< 1 U	< 1 U	< 1 U	< 1 U	< 1 U
Bis(2-chloroethyl) ether	0.012	0.53	< 1 U	< 1 U	< 1 U	< 1 U	< 1 U	< 1 U	< 1 U	< 1 U
Bis(2-chloroisopropyl) ether	0.31	65000	< 1 U	< 1 U	< 1 U	< 1 U	< 1 U	< 1 U	< 1 U	< 1 U
Bis(2-ethylhexyl)phthalate	4.8	2.2	< 5 U	< 5 U	< 5 U	< 5 U	< 5 U	< 5 U	< 5 U	< 5 U
Butyl benzyl phthalate	14	1900	< 5 UJ	< 5 UJ	< 5 UJ	< 5 UJ	< 5 UJ	< 5 UJ	< 5 UJ	< 5 UJ
Caprolactam	7700		< 5 U	**2.3 J**	< 5 U	**1.6 J**	**2.6 J**	**1.9 J**	< 5 U	**1.9 J**
Carbazole			< 1 UJ	< 1 U	< 1 U	< 1 U	< 1 U	< 1 U	< 1 U	< 1 U
Chrysene	2.9	0.018	< 1 UJ	< 1 UJ	< 1 UJ	< 1 UJ	< 1 UJ	< 1 UJ	< 1 UJ	< 1 UJ
Dibenz(a,h)anthracene	0.0029	0.018	< 1 UJ	< 1 UJ	< 1 UJ	< 1 UJ	< 1 UJ	< 1 UJ	< 1 UJ	< 1 UJ
Dibenzofuran	5.8		< 1 U	< 1 U	< 1 U	< 1 U	< 1 U	< 1 U	< 1 U	< 1 U
Diethyl phthalate	11000	44000	< 5 U	< 5 U	< 5 U	< 5 U	< 5 U	< 5 U	< 5 U	< 5 U
Dimethyl phthalate		1100000	< 5 U	< 5 U	< 5 U	< 5 U	< 5 U	< 5 U	< 5 U	< 5 U
Di-n-butyl phthalate	670	4500	< 5 U	< 5 U	< 5 U	< 5 U	< 5 U	< 5 U	< 5 U	< 5 U
Di-n-octylphthalate	190		< 5 UJ	< 5 U	< 5 U	< 5 U	< 5 U	< 5 U	< 5 U	< 5 U
Fluoranthene	630	140	< 1 UJ	< 1 UJ	< 1 UJ	< 1 UJ	< 1 UJ	< 1 UJ	< 1 UJ	< 1 UJ
Fluorene	220	5300	< 1 U	< 1 U	< 1 U	< 1 U	< 1 U	< 1 U	< 1 U	< 1 U
Hexachlorobenzene	0.042	0.00029	< 1 U	< 1 U	< 1 U	< 1 U	< 1 U	< 1 U	< 1 U	< 1 U
Hexachlorobutadiene	0.26	18	< 1 U	< 1 U	< 1 U	< 1 U	< 1 U	< 1 U	< 1 U	< 1 U
Hexachlorocyclopentadiene	22	1100	< 5 U	< 5 U	< 5 U	< 5 U	< 5 U	< 5 U	< 5 U	< 5 U
Hexachloroethane	0.79	3.3	< 1 UJ	< 1 U	< 1 U	< 1 U	< 1 U	< 1 U	< 1 U	< 1 U
Indeno(1,2,3-cd)pyrene	0.029	0.018	< 1 UJ	< 1 UJ	< 1 UJ	< 1 UJ	< 1 UJ	< 1 UJ	< 1 UJ	< 1 UJ

Footnotes appear on last page

Table 4-8
April 2010 Surface Water Analytical Data
SWMU 39
Fort Stewart, Georgia

		Location ID	F39SW-01	F39SW-01-DUP	F39SW-02	F39SW-03	F39SW-04	F39SW-05	F39SW-06	F39SW-07
		Sample Date	4/8/2010	4/8/2010	4/8/2010	4/8/2010	4/8/2010	4/8/2010	4/8/2010	4/8/2010
Chemical Name	Tapwater RSL[2]	IWQS [1]								
SVOCs continued - USEPA Method 8270 (µg/L)										
Isophorone	67	960	< 1 U	< 1 U	< 1 U	< 1 U	< 1 U	< 1 U	< 1 U	< 1 U
Naphthalene	0.14		< 1 U	< 1 U	< 1 U	< 1 U	< 1 U	< 1 U	< 1 U	< 1 U
Nitrobenzene	0.12	690	< 1 UJ	< 1 U	< 1 U	< 1 U	< 1 U	< 1 U	< 1 U	< 1 U
N-Nitroso-di-n-propylamine	0.0093	0.51	< 1 UJ	< 1 U	< 1 U	< 1 U	< 1 U	< 1 U	< 1 U	< 1 U
N-Nitrosodiphenylamine	10	6	< 1 UJ	< 1 U	< 1 U	< 1 U	< 1 U	< 1 U	< 1 U	< 1 U
Pentachlorophenol	0.035	3	< 5 U	< 5 U	< 5 U	< 5 U	< 5 U	< 5 U	< 5 U	< 5 U
Phenanthrene			< 1 UJ	< 1 UJ	< 1 UJ	< 1 UJ	< 1 UJ	< 1 UJ	< 1 UJ	< 1 UJ
Phenol	4500	857000	< 1	< 1 U	< 1 U	< 1 U	< 1 U	< 1 U	< 1 U	< 1 U
Pyrene	87	4000	< 1 UJ	< 1 UJ	< 1 UJ	< 1 UJ	< 1 UJ	< 1 UJ	< 1 UJ	< 1 UJ
Metals - USEPA Method 6010/7470 (µg/L)										
Arsenic	0.045	150	< 10 U	16 UB	6 UB	< 10 U	17 UB	19 UB	19 UB	**22**
Barium	2900		**40**	**47**	**38**	**43**	**47**	**49**	**49**	**47**
Cadmium	6.9	0.15	< 2 U	< 2 U	< 2 U	< 2 U	< 2 U	< 2 U	< 2 U	< 2 U
Chromium		11	< 5 U	**4.2 J**	< 5 U	**2.2 J**	**3.3 J**	< 5 U	< 5 U	**3.9 J**
Lead		1.2	**3.1 J**	**7.5 J**	**3.9 J**	**6.7 J**	**9.2 J**	**6.7 J**	**4.6 J**	**5.1 J**
Selenium	78	5	< 10 U	< 10 U	< 10 U	< 10 U	< 10 U	< 10 U	< 10 U	< 10 U
Silver	71		0.52 UB	< 5	1.1 UB	< 5 U	< 5 U	< 5 U	< 5 U	< 5 U
Mercury	0.63	0.012	< 0.1 U	< 0.1 U	< 0.1 U	< 0.1 U	< 0.1 U	**0.084 J**	< 0.1 U	< 0.1 U

Notes:

1	Georgia Environmental Protection Division Instream Water Quality Standards (IWQS) as of 2011.
2	USEPA tap water RSL as of November 2012.
3.1	Constituent concentration exceeds the IWQS, or the RSL if no IWQS is available.
µg/L	Micrograms per liter.
U	Constituent concentration was qualified as nondetect.
J	Constituent concentration was estimated.
VOCs	Volatile Organic Compounds.
SVOCs	Semi-volatile Organic Compounds.
NA	Not analyzed.
B	Detected in method blank.

Table 4-9
April 2010 Sediment Analytical Data
SWMU 39
Fort Stewart, Georgia

	Location ID Sample Date	F39SED001 4/8/2010	F39SED002 4/8/2010	F39SED003 4/8/2010	F39SED004 4/8/2010	F39SED005 4/8/2010	F39SED006 4/8/2010	F39SED007 4/8/2010	F39SED008 4/8/2010
Chemical Name	Residential RSL[1]								
VOCs - USEPA Method SW8260 (mg/kg)									
1,1,1-Trichloroethane	8700	< 0.031 U	< 0.0095 U	< 0.0072 U	< 0.0067 U	< 0.0072 U	< 0.0053 U	< 0.0048 U	< 0.005 U
1,1,2,2-Tetrachloroethane	0.56	< 0.031 U	< 0.0095 U	< 0.0072 U	< 0.0067 U	< 0.0072 U	< 0.0053 U	< 0.0048 U	< 0.005 U
1,1,2-Trichloro-1,2,2-Trifluoroethane	43000	< 0.031 U	< 0.0095 U	< 0.0072 U	< 0.0067 U	< 0.0072 U	< 0.0053 U	< 0.0048 U	< 0.005 U
1,1,2-Trichloroethane	1.1	< 0.031 U	< 0.0095 U	< 0.0072 U	< 0.0067 U	< 0.0072 U	< 0.0053 U	< 0.0048 U	< 0.005 U
1,1-Dichloroethane	3.3	< 0.031 U	< 0.0095 U	< 0.0072 U	< 0.0067 U	< 0.0072 U	< 0.0053 U	< 0.0048 U	< 0.005 U
1,1-Dichloroethene	240	< 0.031 U	< 0.0095 U	< 0.0072 U	< 0.0067 U	< 0.0072 U	< 0.0053 U	< 0.0048 U	< 0.005 U
1,2,4-Trichlorobenzene	22	< 0.031 U	< 0.0095 U	< 0.0072 U	< 0.0067 U	< 0.0072 U	< 0.0053 U	< 0.0048 U	< 0.005 U
1,2-Dibromo-3-chloropropane (DBCP	0.0054	< 0.031 U	< 0.0095 U	< 0.0072 U	< 0.0067 U	< 0.0072 U	< 0.0053 U	< 0.0048 U	< 0.005 U
1,2-Dibromoethane	0.034	< 0.031 U	< 0.0095 U	< 0.0072 U	< 0.0067 U	< 0.0072 U	< 0.0053 U	< 0.0048 U	< 0.005 U
1,2-Dichlorobenzene	1900	< 0.031 U	< 0.0095 U	< 0.0072 U	< 0.0067 U	< 0.0072 U	< 0.0053 U	< 0.0048 U	< 0.005 U
1,2-Dichloroethane	0.43	< 0.031 U	< 0.0095 U	< 0.0072 U	< 0.0067 U	< 0.0072 U	< 0.0053 U	< 0.0048 U	< 0.005 U
1,2-Dichloropropane	0.94	< 0.031 U	< 0.0095 U	< 0.0072 U	< 0.0067 U	< 0.0072 U	< 0.0053 U	< 0.0048 U	< 0.005 U
1,3-Dichlorobenzene		< 0.031 U	< 0.0095 U	< 0.0072 U	< 0.0067 U	< 0.0072 U	< 0.0053 U	< 0.0048 U	< 0.005 U
1,4-Dichlorobenzene	2.4	< 0.031 U	< 0.0095 U	< 0.0072 U	< 0.0067 U	< 0.0072 U	< 0.0053 U	< 0.0048 U	< 0.005 U
2-Butanone	28000	< 0.062 U	< 0.019 U	< 0.014 U	< 0.013 U	< 0.014 U	< 0.011 U	< 0.0095 U	< 0.0099 U
2-Hexanone	210	< 0.062 U	< 0.019 U	< 0.014 U	< 0.013 U	< 0.014 U	< 0.011 U	< 0.0095 U	< 0.0099 U
4-Methyl-2-pentanone	5300	< 0.062 U	< 0.019 U	< 0.014 U	< 0.013 U	< 0.014 U	< 0.011 U	< 0.0095 U	< 0.0099 U
Acetone	61000	< 0.12 U	< 0.038 U	**0.02 J**	**0.047**	**0.086**	**0.035**	**0.13**	**0.094**
Benzene	1.1	< 0.031 U	< 0.0095 U	< 0.0072 U	< 0.0067 U	< 0.0072 U	< 0.0053 U	< 0.0048 U	< 0.005 U
Benzene, 1-methylethyl	2100	< 0.031 U	< 0.0095 U	< 0.0072 U	< 0.0067 U	< 0.0072 U	< 0.0053 U	< 0.0048 U	< 0.005 U
Bromodichloromethane	0.27	< 0.031 U	< 0.0095 U	< 0.0072 U	< 0.0067 U	< 0.0072 U	< 0.0053 U	< 0.0048 U	< 0.005 U
Bromoform	62	< 0.031 U	< 0.0095 U	< 0.0072 U	< 0.0067 U	< 0.0072 U	< 0.0053 U	< 0.0048 U	< 0.005 U
Bromomethane	7.3	< 0.031 U	< 0.0095 U	< 0.0072 U	< 0.0067 U	< 0.0072 U	< 0.0053 U	< 0.0048 U	< 0.005 U
Carbon disulfide	820	< 0.031 U	< 0.0095 U	< 0.0072 U	< 0.0067 U	< 0.0072 U	< 0.0053 U	< 0.0048 U	< 0.005 U
Carbon tetrachloride	0.61	< 0.031 U	< 0.0095 U	< 0.0072 U	< 0.0067 U	< 0.0072 U	< 0.0053 U	< 0.0048 U	< 0.005 U
CFC-11	790	< 0.031 U	< 0.0095 U	< 0.0072 U	< 0.0067 U	< 0.0072 U	< 0.0053 U	< 0.0048 U	< 0.005 U
CFC-12	94	< 0.031 U	< 0.0095 U	< 0.0072 U	< 0.0067 U	< 0.0072 U	< 0.0053 U	< 0.0048 U	< 0.005 U
Chlorobenzene	290	< 0.031 U	< 0.0095 U	< 0.0072 U	< 0.0067 U	< 0.0072 U	< 0.0053 U	< 0.0048 U	< 0.005 U
Chloroethane	15000	< 0.031 U	< 0.0095 U	< 0.0072 U	< 0.0067 U	< 0.0072 U	< 0.0053 U	< 0.0048 U	< 0.005 U
Chloroform	0.29	< 0.031 U	< 0.0095 U	< 0.0072 U	< 0.0067 U	< 0.0072 U	< 0.0053 U	< 0.0048 U	< 0.005 U
Chloromethane	120	< 0.031 U	< 0.0095 U	< 0.0072 U	< 0.0067 U	< 0.0072 U	< 0.0053 U	< 0.0048 U	< 0.005 U
cis-1,2-Dichloroethene	160	< 0.031 U	< 0.0095 U	< 0.0072 U	< 0.0067 U	**0.003 J**	**0.002 J**	**0.0015 J**	< 0.005 U
cis-1,3-Dichloropropene		< 0.031 U	< 0.0095 U	< 0.0072 U	< 0.0067 U	< 0.0072 U	< 0.0053 U	< 0.0048 U	< 0.005 U
Cyclohexane	7000	< 0.031 U	< 0.0095 U	< 0.0072 U	< 0.0067 U	< 0.0072 U	< 0.0053 U	< 0.0048 U	< 0.005 U
Dibromochloromethane	0.68	< 0.031 U	< 0.0095 U	< 0.0072 U	< 0.0067 U	< 0.0072 U	< 0.0053 U	< 0.0048 U	< 0.005 U
Ethylbenzene	5.4	< 0.031 U	< 0.0095 U	< 0.0072 U	< 0.0067 U	< 0.0072 U	< 0.0053 U	< 0.0048 U	< 0.005 U
Methyl acetate	78000	< 0.031 U	< 0.0095 U	< 0.0072 U	< 0.0067 U	< 0.0072 U	< 0.0053 U	< 0.0048 U	< 0.005 U
Methylcyclohexane		< 0.031 U	< 0.0095 U	< 0.0072 U	< 0.0067 U	< 0.0072 U	< 0.0053 U	< 0.0048 U	< 0.005 U

Footnotes appear on last page.

Table 4-9
April 2010 Sediment Analytical Data
SWMU 39
Fort Stewart, Georgia

	Location ID Sample Date	F39SED001 4/8/2010	F39SED002 4/8/2010	F39SED003 4/8/2010	F39SED004 4/8/2010	F39SED005 4/8/2010	F39SED006 4/8/2010	F39SED007 4/8/2010	F39SED008 4/8/2010
Chemical Name	Residential RSL[1]								
VOCs continued - USEPA Method SW8260 (mg/kg)									
Methylene chloride	56	< 0.031 U	< 0.0095 U	< 0.0072 U	< 0.0067 U	< 0.0072 U	< 0.0053 U	< 0.0048 U	< 0.005 U
Styrene	6300	< 0.031 U	< 0.0095 U	< 0.0072 U	< 0.0067 U	< 0.0072 U	< 0.0053 U	< 0.0048 U	< 0.005 U
tert-Butyl methyl ether	43	< 0.031 U	< 0.0095 U	< 0.0072 U	< 0.0067 U	< 0.0072 U	< 0.0053 U	< 0.0048 U	< 0.005 U
Tetrachloroethene	22	< 0.031 U	< 0.0095 U	< 0.0072 U	**0.011**	**0.019**	< 0.0053 U	< 0.0048 U	< 0.005 U
Toluene	5000	< 0.031 U	< 0.0095 U	< 0.0072 U	< 0.0067 U	< 0.0072 U	< 0.0053 U	< 0.0048 U	< 0.005 U
trans-1,2-Dichloroethene	150	< 0.031 U	< 0.0095 U	< 0.0072 U	< 0.0067 U	< 0.0072 U	< 0.0053 U	< 0.0048 U	< 0.005 U
trans-1,3-Dichloropropene		< 0.031 U	< 0.0095 U	< 0.0072 U	< 0.0067 U	< 0.0072 U	< 0.0053 U	< 0.0048 U	< 0.005 U
Trichloroethene	0.91	< 0.031 U	< 0.0095 U	**0.0029 J**	**0.019**	**0.038**	**0.017**	**0.012**	< 0.005 U
Vinyl chloride	0.06	< 0.031 U	< 0.0095 U	< 0.0072 U	< 0.0067 U	< 0.0072 U	< 0.0053 U	< 0.0048 U	< 0.005 U
Xylenes (total)	630	< 0.031 U	< 0.0095 U	< 0.0072 U	< 0.0067 U	< 0.0072 U	< 0.0053 U	< 0.0048 U	< 0.005 U
SVOCs - USEPA Method SW8270 (mg/kg)									
1,1'-Biphenyl	51	< 0.092 U	< 0.093 U	< 0.089 U	< 0.084 U	< 0.083 U	< 0.089 U	< 0.085 U	< 0.11 U
2,4,5-Trichlorophenol	6100	< 0.092 U	< 0.093 U	< 0.089 U	< 0.084 U	< 0.083 U	< 0.089 U	< 0.085 U	< 0.11 U
2,4,6-Trichlorophenol	44	< 0.092 U	< 0.093 U	< 0.089 U	< 0.084 U	< 0.083 U	< 0.089 U	< 0.085 U	< 0.11 U
2,4-Dichlorophenol	180	< 0.092 U	< 0.093 U	< 0.089 U	< 0.084 U	< 0.083 U	< 0.089 U	< 0.085 U	< 0.11 U
2,4-Dimethylphenol	1200	< 0.092 U	< 0.093 U	< 0.089 U	< 0.084 U	< 0.083 U	< 0.089 U	< 0.085 U	< 0.11 U
2,4-Dinitrophenol	120	< 0.45 UJ	< 0.46 U	< 0.44 U	< 0.41 U	< 0.41 U	< 0.44 U	< 0.42 U	< 0.53 U
2,4-Dinitrotoluene	1.6	< 0.18 U	< 0.18 U	< 0.17 U	< 0.16 U	< 0.16 U	< 0.17 U	< 0.16 U	< 0.21 U
2,6-Dinitrotoluene	61	< 0.18 U	< 0.18 U	< 0.17 U	< 0.16 U	< 0.16 U	< 0.17 U	< 0.16 U	< 0.21 U
2-Chloronaphthalene	6300	< 0.092 U	< 0.093 U	< 0.089 U	< 0.084 U	< 0.083 U	< 0.089 U	< 0.085 U	< 0.11 U
2-Chlorophenol	390	< 0.092 U	< 0.093 U	< 0.089 U	< 0.084 U	< 0.083 U	< 0.089 U	< 0.085 U	< 0.11 U
2-Methyl-4,6-dinitrophenol	4.9	< 0.45 U	< 0.46 U	< 0.44 U	< 0.41 U	< 0.41 U	< 0.44 U	< 0.42 U	< 0.53 U
2-Methylnaphthalene	230	< 0.092 U	< 0.093 U	< 0.089 U	< 0.084 U	< 0.083 U	< 0.089 U	< 0.085 U	**0.14**
2-Methylphenol	3100	< 0.092 U	< 0.093 U	< 0.089 U	< 0.084 U	< 0.083 U	< 0.089 U	< 0.085 U	< 0.11 U
2-Nitrobenzenamine	610	< 0.18 U	< 0.18 U	< 0.17 U	< 0.16 U	< 0.16 U	< 0.17 U	< 0.16 U	< 0.21 U
2-Nitrophenol		< 0.18 U	< 0.18 U	< 0.17 U	< 0.16 U	< 0.16 U	< 0.17 U	< 0.16 U	< 0.21 U
3,3'-Dichlorobenzidine	1.1	< 0.45 U	< 0.46 U	< 0.44 U	< 0.41 U	< 0.41 U	< 0.44 U	< 0.42 U	< 0.53 U
3-Nitrobenzenamine		< 0.18 U	< 0.18 U	< 0.17 U	< 0.16 U	< 0.16 U	< 0.17 U	< 0.16 U	< 0.21 U
4-Bromophenyl phenyl ether		< 0.092 U	< 0.093 U	< 0.089 U	< 0.084 U	< 0.083 U	< 0.089 U	< 0.085 U	< 0.11 U
4-Chloro-3-methylphenol	6100	< 0.092 U	< 0.093 U	< 0.089 U	< 0.084 U	< 0.083 U	< 0.089 U	< 0.085 U	< 0.11 U
4-Chlorobenzenamine	2.4	< 0.092 U	< 0.093 U	< 0.089 U	< 0.084 U	< 0.083 U	< 0.089 U	< 0.085 U	< 0.11 U
4-Chlorophenyl phenyl ether		< 0.092 U	< 0.093 U	< 0.089 U	< 0.084 U	< 0.083 U	< 0.089 U	< 0.085 U	< 0.11 U
4-Methylphenol	6100	< 0.18 U	**0.16 J**	< 0.17 U	< 0.16 U	< 0.16 U	< 0.17 U	< 0.16 U	< 0.21 U
4-Nitrobenzenamine	24	< 0.18 U	< 0.18 U	< 0.17 U	< 0.16 U	< 0.16 U	< 0.17 U	< 0.16 U	< 0.21 U
4-Nitrophenol		< 0.45 U	< 0.46 U	< 0.44 U	< 0.41 U	< 0.41 U	< 0.44 U	< 0.42 U	< 0.53 U
Acenaphthene	3400	< 0.092 U	< 0.093 U	< 0.089 U	< 0.084 U	< 0.083 U	< 0.089 U	< 0.085 U	< 0.11 U
Acenaphthylene		< 0.092 U	< 0.093 U	< 0.089 U	< 0.084 U	< 0.083 U	< 0.089 U	< 0.085 U	< 0.11 U
Acetophenone	7800	< 0.092 U	< 0.093 U	< 0.089 U	< 0.084 U	< 0.083 U	< 0.089 U	< 0.085 U	< 0.11 U
Anthracene	17000	< 0.092 U	< 0.093 U	< 0.089 U	< 0.084 U	< 0.083 U	< 0.089 U	< 0.085 U	< 0.11 U

Footnotes appear on last page.

Table 4-9
April 2010 Sediment Analytical Data
SWMU 39
Fort Stewart, Georgia

	Location ID Sample Date	F39SED001 4/8/2010	F39SED002 4/8/2010	F39SED003 4/8/2010	F39SED004 4/8/2010	F39SED005 4/8/2010	F39SED006 4/8/2010	F39SED007 4/8/2010	F39SED008 4/8/2010
Chemical Name	Residential RSL[1]								
SVOCs - USEPA Method SW8270 (mg/kg)									
Atrazine	2.1	< 0.092 U	< 0.093 U	< 0.089 U	< 0.084 U	< 0.083 U	< 0.089 U	< 0.085 U	< 0.11 U
Benz(a)anthracene	0.15	< 0.092 U	< 0.093 U	< 0.089 U	< 0.084 U	< 0.083 U	< 0.089 U	< 0.085 U	< 0.11 U
Benzaldehyde	7800	< 0.092 U	< 0.093 U	< 0.089 U	< 0.084 U	< 0.083 U	< 0.089 U	< 0.085 U	**0.61**
Benzo(a)pyrene	0.015	< 0.092 U	< 0.093 U	< 0.089 U	< 0.084 U	< 0.083 U	< 0.089 U	< 0.085 U	< 0.11 U
Benzo(b)fluoranthene	0.15	< 0.092 U	< 0.093 U	< 0.089 U	< 0.084 U	< 0.083 U	< 0.089 U	< 0.085 U	**0.14**
Benzo(ghi)perylene		< 0.092 U	< 0.093 U	< 0.089 U	< 0.084 U	< 0.083 U	< 0.089 U	< 0.085 U	< 0.11 U
Benzo(k)fluoranthene	1.5	< 0.092 U	< 0.093 U	< 0.089 U	< 0.084 U	< 0.083 U	< 0.089 U	< 0.085 U	< 0.11 U
Bis(2-chloroethoxy)methane	180	< 0.092 U	< 0.093 U	< 0.089 U	< 0.084 U	< 0.083 U	< 0.089 U	< 0.085 U	< 0.11 U
Bis(2-chloroethyl) ether	0.21	< 0.092 UJ	< 0.093 U	< 0.089 U	< 0.084 U	< 0.083 U	< 0.089 U	< 0.085 U	< 0.11 U
Bis(2-chloroisopropyl) ether	4.6	< 0.092 UJ	< 0.093 U	< 0.089 U	< 0.084 U	< 0.083 U	< 0.089 U	< 0.085 U	< 0.11 U
Bis(2-ethylhexyl)phthalate	35	< 0.092 U	**0.093**	< 0.089 U	< 0.084 U	< 0.083 U	< 0.089 U	< 0.085 U	< 0.11 U
Butyl benzyl phthalate	260	< 0.18 U	< 0.18 U	< 0.17 U	< 0.16 U	< 0.16 U	< 0.17 U	< 0.16 U	< 0.21 U
Caprolactam	31000	< 0.092 U	< 0.093 U	< 0.089 U	< 0.084 U	< 0.083 U	< 0.089 U	< 0.085 U	< 0.11 U
Carbazole		< 0.092 U	< 0.093 U	< 0.089 U	< 0.084 U	< 0.083 U	< 0.089 U	< 0.085 U	< 0.11 U
Chrysene	15	< 0.092 UJ	< 0.093 U	< 0.089 U	< 0.084 U	< 0.083 U	< 0.089 U	< 0.085 U	< 0.11 U
Dibenz(a,h)anthracene	0.015	< 0.092 U	< 0.093 U	< 0.089 U	< 0.084 U	< 0.083 U	< 0.089 U	< 0.085 U	< 0.11 U
Dibenzofuran	78	< 0.092 U	< 0.093 U	< 0.089 U	< 0.084 U	< 0.083 U	< 0.089 U	< 0.085 U	< 0.11 U
Diethyl phthalate	49000	< 0.092 U	< 0.093 U	< 0.089 U	< 0.084 U	< 0.083 U	< 0.089 U	< 0.085 U	< 0.11 U
Dimethyl phthalate		< 0.092 U	< 0.093 U	< 0.089 U	< 0.084 U	< 0.083 U	< 0.089 U	< 0.085 U	< 0.11 U
Di-n-butyl phthalate	6100	< 0.092 U	< 0.093 U	< 0.089 U	< 0.084 U	< 0.083 U	< 0.089 U	< 0.085 U	< 0.11 U
Di-n-octylphthalate	730	< 0.092 U	< 0.093 U	< 0.089 U	< 0.084 U	< 0.083 U	< 0.089 U	< 0.085 U	< 0.11 U
Fluoranthene	2300	< 0.092 U	< 0.093 U	< 0.089 U	< 0.084 U	< 0.083 U	< 0.089 U	< 0.085 U	< 0.11 U
Fluorene	2300	< 0.092 U	< 0.093 U	< 0.089 U	< 0.084 U	< 0.083 U	< 0.089 U	< 0.085 U	< 0.11 U
Hexachlorobenzene	0.3	< 0.092 U	< 0.093 U	< 0.089 U	< 0.084 U	< 0.083 U	< 0.089 U	< 0.085 U	< 0.11 U
Hexachlorobutadiene	6.2	< 0.092 UJ	< 0.093 U	< 0.089 U	< 0.084 U	< 0.083 U	< 0.089 U	< 0.085 U	< 0.11 U
Hexachlorocyclopentadiene	370	< 0.45 UJ	< 0.46 U	< 0.44 U	< 0.41 U	< 0.41 U	< 0.44 U	< 0.42 U	< 0.53 U
Hexachloroethane	12	< 0.092 UJ	< 0.093 U	< 0.089 U	< 0.084 U	< 0.083 U	< 0.089 U	< 0.085 U	< 0.11 U
Indeno(1,2,3-cd)pyrene	0.15	< 0.092 U	< 0.093 U	< 0.089 U	< 0.084 U	< 0.083 U	< 0.089 U	< 0.085 U	< 0.11 U
Isophorone	510	< 0.092 U	< 0.093 U	< 0.089 U	< 0.084 U	< 0.083 U	< 0.089 U	< 0.085 U	< 0.11 U
Naphthalene	3.6	< 0.092 U	< 0.093 U	< 0.089 U	< 0.084 U	< 0.083 U	< 0.089 U	< 0.085 U	< 0.11 U
Nitrobenzene	4.8	< 0.092 U	< 0.093 U	< 0.089 U	< 0.084 U	< 0.083 U	< 0.089 U	< 0.085 U	< 0.11 U
N-Nitroso-di-n-propylamine	0.069	< 0.092 U	< 0.093 U	< 0.089 U	< 0.084 U	< 0.083 U	< 0.089 U	< 0.085 U	< 0.11 U
N-Nitrosodiphenylamine	99	< 0.092 U	< 0.093 U	< 0.089 U	< 0.084 U	< 0.083 U	< 0.089 U	< 0.085 U	< 0.11 U
Pentachlorophenol	0.89	< 0.45 U	< 0.46 U	< 0.44 U	< 0.41 U	< 0.41 U	< 0.44 U	< 0.42 U	< 0.53 U
Phenanthrene		< 0.092 U	< 0.093 U	< 0.089 U	< 0.084 U	< 0.083 U	< 0.089 U	< 0.085 U	**0.14**
Phenol	18000	< 0.092 U	< 0.093 U	< 0.089 U	< 0.084 U	< 0.083 U	< 0.089 U	< 0.085 U	< 0.11 U
Pyrene	1700	< 0.092 UJ	< 0.093 U	< 0.089 U	< 0.084 U	< 0.083 U	< 0.089 U	< 0.085 U	< 0.11 U

Footnotes appear on last page.

Table 4-9
April 2010 Sediment Analytical Data
SWMU 39
Fort Stewart, Georgia

	Location ID Sample Date	F39SED001 4/8/2010	F39SED002 4/8/2010	F39SED003 4/8/2010	F39SED004 4/8/2010	F39SED005 4/8/2010	F39SED006 4/8/2010	F39SED007 4/8/2010	F39SED008 4/8/2010
Chemical Name	Residential RSL[1]								
Metals - USEPA Method 6010/7470 (mg/kg)									
Arsenic	0.39	**0.57 J**	**0.52 J**	**1**	**0.5 J**	**0.81**	**3.7**	**2.9**	**17**
Barium	15000	**3.9**	**6.9**	**5.4**	**7.5**	**0.8 J**	**1.6 J**	**0.9 J**	**16**
Cadmium	70	**0.14**	0.11 UB	0.096 UB	0.053 UB	0.033 UB	0.11 UB	0.087 UB	**0.6**
Chromium		**3**	**1.9**	**6.3**	**1.4**	**1.3**	**1.3**	**0.85**	**4.6**
Lead	400	**3.9**	**2.6**	**9.3**	**1.9**	**0.64**	**1.5**	**1.5**	**5.1**
Selenium	390	0.35 UB	0.4 UB	0.51 UB	0.26 UB	0.21 UB	0.33 UB	< 0.6 U	1 UB
Silver	390	< 0.32 U	< 0.35 U	< 0.33 U	< 0.3 U	< 0.31 U	< 0.34 U	< 0.3 U	< 0.41 U
Mercury	10	< 0.11 U	**0.0098 J**	**0.062 J**	< 0.095 U	< 0.098 U	< 0.11 U	< 0.1 U	**0.03 J**

Notes:

[1]	USEPA Residential Regional Screening Level for sediment as of November 2012.
1	Constituent concentration exceeds the USEPA residential soil RSL.
mg/kg	Milligrams per kilogram.
U	Constituent concentration was qualified as nondetect.
J	Constituent concentration was estimated.
VOCs	Volatile Organic Compounds.
SVOCs	Semi-volatile Organic Compounds.
NA	Not analyzed. `
B	Detected in method blank.

Table 4-10
September 2010 Saturated Soil Analytical Data
SWMU 39
Fort Stewart, Georgia

Location ID	F39TWS13	F39TWS13	F39TWS13	F39TWS13	F39TWS13	F39TWS13	F39TWS13	F39TWS13	F39TWS13	F39TWS13
Sample Date	9/14/2010	9/14/2010	9/14/2010	9/14/2010	9/14/2010	9/14/2010	9/14/2010	9/14/2010	9/14/2010	9/14/2010
Depth (ft bls)	30-32	32-34	34-36	36-38	38-40	40-42	42-44	44-46	46-48	48-50
Chemical Name										
VOCs - U.S. EPA Method 8260 (mg/kg)										
1,1,1-Trichloroethane	< 0.0057 U	< 0.005 U	< 0.0043 U	< 0.0068 U	< 0.0056 U	< 0.0056 U	< 0.003 U	< 0.0043 U	< 0.0053 U	< 0.0048 U
1,1,2,2-Tetrachloroethane	< 0.0057 U	< 0.005 U	< 0.0043 U	< 0.0068 U	< 0.0056 U	< 0.0056 U	< 0.003 U	< 0.0043 U	< 0.0053 U	< 0.0048 U
1,1,2-Trichloro-1,2,2-Trifluoroethane	< 0.0057 U	< 0.005 U	< 0.0043 U	< 0.0068 U	< 0.0056 U	< 0.0056 U	< 0.003 U	< 0.0043 U	< 0.0053 U	< 0.0048 U
1,1,2-Trichloroethane	< 0.0057 U	< 0.005 U	< 0.0043 U	< 0.0068 U	< 0.0056 U	< 0.0056 U	< 0.003 U	< 0.0043 U	< 0.0053 U	< 0.0048 U
1,1-Dichloroethane	< 0.0057 U	< 0.005 U	< 0.0043 U	< 0.0068 U	< 0.0056 U	< 0.0056 U	< 0.003 U	< 0.0043 U	< 0.0053 U	< 0.0048 U
1,1-Dichloroethene	< 0.0057 U	< 0.005 U	< 0.0043 U	< 0.0068 U	< 0.0056 U	< 0.0056 U	< 0.003 U	< 0.0043 U	< 0.0053 U	< 0.0048 U
1,2,4-Trichlorobenzene	< 0.0057 U	< 0.005 U	< 0.0043 U	< 0.0068 U	< 0.0056 U	< 0.0056 U	< 0.003 U	< 0.0043 U	< 0.0053 U	< 0.0048 U
1,2-Dibromo-3-chloropropane (DBCP)	< 0.0057 U	< 0.005 U	< 0.0043 U	< 0.0068 U	< 0.0056 U	< 0.0056 U	< 0.003 U	< 0.0043 U	< 0.0053 U	< 0.0048 U
1,2-Dibromoethane	< 0.0057 U	< 0.005 U	< 0.0043 U	< 0.0068 U	< 0.0056 U	< 0.0056 U	< 0.003 U	< 0.0043 U	< 0.0053 U	< 0.0048 U
1,2-Dichlorobenzene	< 0.0057 U	< 0.005 U	< 0.0043 U	< 0.0068 U	< 0.0056 U	< 0.0056 U	< 0.003 U	< 0.0043 U	< 0.0053 U	< 0.0048 U
1,2-Dichloroethane	< 0.0057 U	< 0.005 U	< 0.0043 U	< 0.0068 U	< 0.0056 U	< 0.0056 U	< 0.003 U	< 0.0043 U	< 0.0053 U	< 0.0048 U
1,2-Dichloropropane	< 0.0057 U	< 0.005 U	< 0.0043 U	< 0.0068 U	< 0.0056 U	< 0.0056 U	< 0.003 U	< 0.0043 U	< 0.0053 U	< 0.0048 U
1,3-Dichlorobenzene	< 0.0057 U	< 0.005 U	< 0.0043 U	< 0.0068 U	< 0.0056 U	< 0.0056 U	< 0.003 U	< 0.0043 U	< 0.0053 U	< 0.0048 U
1,4-Dichlorobenzene	< 0.0057 U	< 0.005 U	< 0.0043 U	< 0.0068 U	< 0.0056 U	< 0.0056 U	< 0.003 U	< 0.0043 U	< 0.0053 U	< 0.0048 U
2-Butanone	**0.0032 J**	< 0.01 U	< 0.0087 U	< 0.014 U	< 0.011 U	< 0.011 U	< 0.0061 U	< 0.0086 U	< 0.011 U	< 0.0097 U
2-Hexanone	< 0.011 U	< 0.01 U	< 0.0087 U	< 0.014 U	< 0.011 U	< 0.011 U	< 0.0061 U	< 0.0086 U	< 0.011 U	< 0.0097 U
4-Methyl-2-pentanone	< 0.011 U	< 0.01 U	< 0.0087 U	< 0.014 U	< 0.011 U	< 0.011 U	< 0.0061 U	< 0.0086 U	< 0.011 U	< 0.0097 U
Acetone	**0.055**	**0.023**	**0.038**	**0.048**	**0.046**	**0.038**	**0.033**	**0.041**	**0.034**	**0.047**
Benzene	< 0.0057 U	< 0.005 U	< 0.0043 U	< 0.0068 U	< 0.0056 U	< 0.0056 U	< 0.003 U	< 0.0043 U	< 0.0053 U	< 0.0048 U
Benzene, 1-methylethyl	< 0.0057 U	< 0.005 U	< 0.0043 U	< 0.0068 U	< 0.0056 U	< 0.0056 U	< 0.003 U	< 0.0043 U	< 0.0053 U	< 0.0048 U
Bromodichloromethane	< 0.0057 U	< 0.005 U	< 0.0043 U	< 0.0068 U	< 0.0056 U	< 0.0056 U	< 0.003 U	< 0.0043 U	< 0.0053 U	< 0.0048 U
Bromoform	< 0.0057 U	< 0.005 U	< 0.0043 U	< 0.0068 U	< 0.0056 U	< 0.0056 U	< 0.003 U	< 0.0043 U	< 0.0053 U	< 0.0048 U
Bromomethane	< 0.0057 U	< 0.005 U	< 0.0043 U	< 0.0068 U	< 0.0056 U	< 0.0056 U	< 0.003 U	< 0.0043 U	< 0.0053 U	< 0.0048 U
Carbon disulfide	< 0.0057 U	**0.0014 J**	< 0.0043 U	< 0.0068 U	< 0.0056 U	< 0.0056 U	< 0.003 U	**0.0016 J**	< 0.0053 U	**0.0037 J**
Carbon tetrachloride	< 0.0057 U	< 0.005 U	< 0.0043 U	< 0.0068 U	< 0.0056 U	< 0.0056 U	< 0.003 U	< 0.0043 U	< 0.0053 U	< 0.0048 U
CFC-11	< 0.0057 U	< 0.005 U	< 0.0043 U	< 0.0068 U	< 0.0056 U	< 0.0056 U	< 0.003 U	< 0.0043 U	< 0.0053 U	< 0.0048 U
CFC-12	< 0.0057 U	< 0.005 U	< 0.0043 U	< 0.0068 U	< 0.0056 U	< 0.0056 U	< 0.003 U	< 0.0043 U	< 0.0053 U	< 0.0048 U
Chlorobenzene	< 0.0057 U	< 0.005 U	< 0.0043 U	< 0.0068 U	< 0.0056 U	< 0.0056 U	< 0.003 U	< 0.0043 U	< 0.0053 U	< 0.0048 U
Chloroethane	< 0.0057 U	< 0.005 U	< 0.0043 U	< 0.0068 U	< 0.0056 U	< 0.0056 U	< 0.003 U	< 0.0043 U	< 0.0053 U	< 0.0048 U
Chloroform	< 0.0057 U	< 0.005 U	< 0.0043 U	< 0.0068 U	< 0.0056 U	< 0.0056 U	< 0.003 U	< 0.0043 U	< 0.0053 U	< 0.0048 U
Chloromethane	< 0.0057 U	< 0.005 U	< 0.0043 U	< 0.0068 U	< 0.0056 U	< 0.0056 U	< 0.003 U	< 0.0043 U	< 0.0053 U	< 0.0048 U
cis-1,2-Dichloroethene	< 0.0057 U	**0.043**	**0.00077 J**	< 0.0068 U	< 0.0056 U	< 0.0056 U	< 0.003 U	**0.015**	< 0.0053 U	**0.01**
cis-1,3-Dichloropropene	< 0.0057 U	< 0.005 U	< 0.0043 U	< 0.0068 U	< 0.0056 U	< 0.0056 U	< 0.003 U	< 0.0043 U	< 0.0053 U	< 0.0048 U
Cyclohexane	< 0.0057 U	< 0.005 U	< 0.0043 U	< 0.0068 U	< 0.0056 U	< 0.0056 U	< 0.003 U	< 0.0043 U	< 0.0053 U	< 0.0048 U
Dibromochloromethane	< 0.0057 U	< 0.005 U	< 0.0043 U	< 0.0068 U	< 0.0056 U	< 0.0056 U	< 0.003 U	< 0.0043 U	< 0.0053 U	< 0.0048 U
Ethylbenzene	< 0.0057 U	< 0.005 U	< 0.0043 U	< 0.0068 U	< 0.0056 U	< 0.0056 U	< 0.003 U	< 0.0043 U	< 0.0053 U	< 0.0048 U
Methyl acetate	< 0.0057 U	< 0.005 U	< 0.0043 U	< 0.0068 U	< 0.0056 U	< 0.0056 U	< 0.003 U	< 0.0043 U	< 0.0053 U	< 0.0048 U
Methylcyclohexane	< 0.0057 U	< 0.005 U	< 0.0043 U	< 0.0068 U	< 0.0056 U	< 0.0056 U	< 0.003 U	< 0.0043 U	< 0.0053 U	< 0.0048 U
Methylene chloride	< 0.0057 U	< 0.005 U	< 0.0043 U	< 0.0068 U	< 0.0056 U	< 0.0056 U	< 0.003 U	< 0.0043 U	< 0.0053 U	< 0.0048 U
Styrene	< 0.0057 U	< 0.005 U	< 0.0043 U	< 0.0068 U	< 0.0056 U	< 0.0056 U	< 0.003 U	< 0.0043 U	< 0.0053 U	< 0.0048 U
tert-Butyl methyl ether	< 0.0057 U	< 0.005 U	< 0.0043 U	< 0.0068 U	< 0.0056 U	< 0.0056 U	< 0.003 U	< 0.0043 U	< 0.0053 U	< 0.0048 U
Tetrachloroethene	< 0.0057 U	**0.098**	**0.0038 J**	< 0.0068 U	**0.0023 J**	< 0.0056 U	**0.00075 J**	**0.016**	< 0.0053 U	**0.014**
Toluene	< 0.0057 U	< 0.005 U	< 0.0043 U	< 0.0068 U	< 0.0056 U	< 0.0056 U	< 0.003 U	< 0.0043 U	< 0.0053 U	< 0.0048 U
trans-1,2-Dichloroethene	< 0.0057 U	**0.0093**	< 0.0043 U	< 0.0068 U	< 0.0056 U	< 0.0056 U	< 0.003 U	< 0.0043 U	< 0.0053 U	**0.0025 J**
trans-1,3-Dichloropropene	< 0.0057 U	< 0.005 U	< 0.0043 U	< 0.0068 U	< 0.0056 U	< 0.0056 U	< 0.003 U	< 0.0043 U	< 0.0053 U	< 0.0048 U
Trichloroethene	< 0.0057 U	**0.2**	**0.0034 J**	< 0.0068 U	< 0.0056 U	< 0.0056 U	< 0.003 U	**0.09**	< 0.0053 U	**0.032**
Vinyl chloride	< 0.0057 U	< 0.005 U	< 0.0043 U	< 0.0068 U	< 0.0056 U	< 0.0056 U	< 0.003 U	< 0.0043 U	< 0.0053 U	< 0.0048 U
Xylenes (total)	< 0.0057 U	< 0.005 U	< 0.0043 U	< 0.0068 U	< 0.0056 U	< 0.0056 U	< 0.003 U	< 0.0043 U	< 0.0053 U	< 0.0048 U

Footnotes appear on last page.

Table 4-10
September 2010 Saturated Soil Analytical Data
SWMU 39
Fort Stewart, Georgia

Location ID	F39TWS13	F39TWS13	F39TWS13	F39TWS13	F39TWS13	F39TWS13	F39TWS13	F39TWS13	F39TWS13	F39TWS13
Sample Date	9/14/2010	9/14/2010	9/14/2010	9/14/2010	9/14/2010	9/14/2010	9/14/2010	9/14/2010	9/14/2010	9/14/2010
Depth (ft bls)	50-52	52-54	54-56	56-58	58-60	60-62	62-64	64-66	66-68	68-70
Chemical Name										
VOCs - U.S. EPA Method 8260 (mg/kg)										
1,1,1-Trichloroethane	< 0.0049 U	< 0.0043 U	< 0.0045 U	< 0.0052 U	< 0.0042 U	< 0.0065 U	< 0.0049 U	< 0.0039 U	< 0.0061 U	< 0.0063 U
1,1,2,2-Tetrachloroethane	< 0.0049 U	< 0.0043 U	< 0.0045 U	< 0.0052 U	< 0.0042 U	< 0.0065 U	< 0.0049 U	< 0.0039 U	< 0.0061 U	< 0.0063 U
1,1,2-Trichloro-1,2,2-Trifluoroethane	< 0.0049 U	< 0.0043 U	< 0.0045 U	< 0.0052 U	< 0.0042 U	< 0.0065 U	< 0.0049 U	< 0.0039 U	< 0.0061 U	< 0.0063 U
1,1,2-Trichloroethane	< 0.0049 U	< 0.0043 U	< 0.0045 U	< 0.0052 U	< 0.0042 U	< 0.0065 U	< 0.0049 U	< 0.0039 U	< 0.0061 U	< 0.0063 U
1,1-Dichloroethane	< 0.0049 U	< 0.0043 U	< 0.0045 U	< 0.0052 U	< 0.0042 U	< 0.0065 U	< 0.0049 U	< 0.0039 U	< 0.0061 U	< 0.0063 U
1,1-Dichloroethene	< 0.0049 U	< 0.0043 U	< 0.0045 U	< 0.0052 U	< 0.0042 U	< 0.0065 U	< 0.0049 U	< 0.0039 U	< 0.0061 U	< 0.0063 U
1,2,4-Trichlorobenzene	< 0.0049 U	< 0.0043 U	< 0.0045 U	< 0.0052 U	< 0.0042 U	< 0.0065 U	< 0.0049 U	< 0.0039 U	< 0.0061 U	< 0.0063 U
1,2-Dibromo-3-chloropropane (DBCP)	< 0.0049 U	< 0.0043 U	< 0.0045 U	< 0.0052 U	< 0.0042 U	< 0.0065 U	< 0.0049 U	< 0.0039 U	< 0.0061 U	< 0.0063 U
1,2-Dibromoethane	< 0.0049 U	< 0.0043 U	< 0.0045 U	< 0.0052 U	< 0.0042 U	< 0.0065 U	< 0.0049 U	< 0.0039 U	< 0.0061 U	< 0.0063 U
1,2-Dichlorobenzene	< 0.0049 U	< 0.0043 U	< 0.0045 U	< 0.0052 U	< 0.0042 U	< 0.0065 U	< 0.0049 U	< 0.0039 U	< 0.0061 U	< 0.0063 U
1,2-Dichloroethane	< 0.0049 U	< 0.0043 U	< 0.0045 U	< 0.0052 U	< 0.0042 U	< 0.0065 U	< 0.0049 U	< 0.0039 U	< 0.0061 U	< 0.0063 U
1,2-Dichloropropane	< 0.0049 U	< 0.0043 U	< 0.0045 U	< 0.0052 U	< 0.0042 U	< 0.0065 U	< 0.0049 U	< 0.0039 U	< 0.0061 U	< 0.0063 U
1,3-Dichlorobenzene	< 0.0049 U	< 0.0043 U	< 0.0045 U	< 0.0052 U	< 0.0042 U	< 0.0065 U	< 0.0049 U	< 0.0039 U	< 0.0061 U	< 0.0063 U
1,4-Dichlorobenzene	< 0.0049 U	< 0.0043 U	< 0.0045 U	< 0.0052 U	< 0.0042 U	< 0.0065 U	< 0.0049 U	< 0.0039 U	< 0.0061 U	< 0.0063 U
2-Butanone	< 0.0098 U	< 0.0086 U	< 0.009 U	< 0.01 U	< 0.0085 U	< 0.013 U	< 0.0099 U	< 0.0078 U	< 0.012 U	< 0.013 U
2-Hexanone	< 0.0098 U	< 0.0086 U	< 0.009 U	< 0.01 U	< 0.0085 U	< 0.013 U	< 0.0099 U	< 0.0078 U	< 0.012 U	< 0.013 U
4-Methyl-2-pentanone	< 0.0098 U	< 0.0086 U	< 0.009 U	< 0.01 U	< 0.0085 U	< 0.013 U	< 0.0099 U	< 0.0078 U	< 0.012 U	< 0.013 U
Acetone	**0.033**	**0.046**	**0.07**	**0.046**	**0.065**	**0.041**	**0.051**	**0.055**	**0.041**	**0.067**
Benzene	< 0.0049 U	< 0.0043 U	< 0.0045 U	< 0.0052 U	< 0.0042 U	< 0.0065 U	< 0.0049 U	< 0.0039 U	< 0.0061 U	< 0.0063 U
Benzene, 1-methylethyl	< 0.0049 U	< 0.0043 U	< 0.0045 U	< 0.0052 U	< 0.0042 U	< 0.0065 U	< 0.0049 U	< 0.0039 U	< 0.0061 U	< 0.0063 U
Bromodichloromethane	< 0.0049 U	< 0.0043 U	< 0.0045 U	< 0.0052 U	< 0.0042 U	< 0.0065 U	< 0.0049 U	< 0.0039 U	< 0.0061 U	< 0.0063 U
Bromoform	< 0.0049 U	< 0.0043 U	< 0.0045 U	< 0.0052 U	< 0.0042 U	< 0.0065 U	< 0.0049 U	< 0.0039 U	< 0.0061 U	< 0.0063 U
Bromomethane	< 0.0049 U	< 0.0043 U	< 0.0045 U	< 0.0052 U	< 0.0042 U	< 0.0065 U	< 0.0049 U	< 0.0039 U	< 0.0061 U	< 0.0063 U
Carbon disulfide	< 0.0049 U	< 0.0043 U	**0.0064**	**0.0016 J**	**0.011**	< 0.0065 U	**0.0038 J**	**0.026**	**0.0017 J**	**0.007**
Carbon tetrachloride	< 0.0049 U	< 0.0043 U	< 0.0045 U	< 0.0052 U	< 0.0042 U	< 0.0065 U	< 0.0049 U	< 0.0039 U	< 0.0061 U	< 0.0063 U
CFC-11	< 0.0049 U	< 0.0043 U	< 0.0045 U	< 0.0052 U	< 0.0042 U	< 0.0065 U	< 0.0049 U	< 0.0039 U	< 0.0061 U	< 0.0063 U
CFC-12	< 0.0049 U	< 0.0043 U	< 0.0045 U	< 0.0052 U	< 0.0042 U	< 0.0065 U	< 0.0049 U	< 0.0039 U	< 0.0061 U	< 0.0063 U
Chlorobenzene	< 0.0049 U	< 0.0043 U	< 0.0045 U	< 0.0052 U	< 0.0042 U	< 0.0065 U	< 0.0049 U	< 0.0039 U	< 0.0061 U	< 0.0063 U
Chloroethane	< 0.0049 U	< 0.0043 U	< 0.0045 U	< 0.0052 U	< 0.0042 U	< 0.0065 U	< 0.0049 U	< 0.0039 U	< 0.0061 U	< 0.0063 U
Chloroform	< 0.0049 U	< 0.0043 U	< 0.0045 U	< 0.0052 U	< 0.0042 U	< 0.0065 U	< 0.0049 U	< 0.0039 U	< 0.0061 U	< 0.0063 U
Chloromethane	< 0.0049 U	< 0.0043 U	< 0.0045 U	< 0.0052 U	< 0.0042 U	< 0.0065 U	< 0.0049 U	< 0.0039 U	< 0.0061 U	< 0.0063 U
cis-1,2-Dichloroethene	< 0.0049 U	< 0.0043 U	**0.065**	**0.099**	**0.0054**	< 0.0065 U	**0.0053**	**0.00081 J**	< 0.0061 U	**0.012**
cis-1,3-Dichloropropene	< 0.0049 U	< 0.0043 U	< 0.0045 U	< 0.0052 U	< 0.0042 U	< 0.0065 U	< 0.0049 U	< 0.0039 U	< 0.0061 U	< 0.0063 U
Cyclohexane	< 0.0049 U	< 0.0043 U	< 0.0045 U	< 0.0052 U	< 0.0042 U	< 0.0065 U	< 0.0049 U	< 0.0039 U	< 0.0061 U	< 0.0063 U
Dibromochloromethane	< 0.0049 U	< 0.0043 U	< 0.0045 U	< 0.0052 U	< 0.0042 U	< 0.0065 U	< 0.0049 U	< 0.0039 U	< 0.0061 U	< 0.0063 U
Ethylbenzene	< 0.0049 U	< 0.0043 U	< 0.0045 U	< 0.0052 U	< 0.0042 U	< 0.0065 U	< 0.0049 U	< 0.0039 U	< 0.0061 U	< 0.0063 U
Methyl acetate	< 0.0049 U	< 0.0043 U	< 0.0045 U	< 0.0052 U	< 0.0042 U	< 0.0065 U	< 0.0049 U	< 0.0039 U	< 0.0061 U	< 0.0063 U
Methylcyclohexane	< 0.0049 U	< 0.0043 U	< 0.0045 U	< 0.0052 U	< 0.0042 U	< 0.0065 U	< 0.0049 U	< 0.0039 U	< 0.0061 U	< 0.0063 U
Methylene chloride	< 0.0049 U	< 0.0043 U	< 0.0045 U	< 0.0052 U	< 0.0042 U	< 0.0065 U	< 0.0049 U	< 0.0039 U	< 0.0061 U	< 0.0063 U
Styrene	< 0.0049 U	< 0.0043 U	< 0.0045 U	< 0.0052 U	< 0.0042 U	< 0.0065 U	< 0.0049 U	< 0.0039 U	< 0.0061 U	< 0.0063 U
tert-Butyl methyl ether	< 0.0049 U	< 0.0043 U	< 0.0045 U	< 0.0052 U	< 0.0042 U	< 0.0065 U	< 0.0049 U	< 0.0039 U	< 0.0061 U	< 0.0063 U
Tetrachloroethene	< 0.0049 U	**0.0014 J**	**0.17 J**	**0.18**	**0.0023 J**	< 0.0065 U	**0.041**	**0.0009 J**	< 0.0061 U	**0.0041 J**
Toluene	< 0.0049 U	< 0.0043 U	< 0.0045 U	< 0.0052 U	< 0.0042 U	< 0.0065 U	< 0.0049 U	< 0.0039 U	< 0.0061 U	< 0.0063 U
trans-1,2-Dichloroethene	< 0.0049 U	< 0.0043 U	< 0.0045 U	< 0.0052 U	< 0.0042 U	< 0.0065 U	< 0.0049 U	< 0.0039 U	< 0.0061 U	< 0.0063 U
trans-1,3-Dichloropropene	< 0.0049 U	< 0.0043 U	< 0.0045 U	< 0.0052 U	< 0.0042 U	< 0.0065 U	< 0.0049 U	< 0.0039 U	< 0.0061 U	< 0.0063 U
Trichloroethene	< 0.0049 U	**0.0019 J**	**0.63**	**0.24 J**	**0.0037 J**	< 0.0065 U	**0.035**	< 0.0039 U	< 0.0061 U	**0.037**
Vinyl chloride	< 0.0049 U	< 0.0043 U	< 0.0045 U	< 0.0052 U	< 0.0042 U	< 0.0065 U	< 0.0049 U	< 0.0039 U	< 0.0061 U	< 0.0063 U
Xylenes (total)	< 0.0049 U	< 0.0043 U	< 0.0045 U	< 0.0052 U	< 0.0042 U	< 0.0065 U	< 0.0049 U	< 0.0039 U	< 0.0061 U	< 0.0063 U

Notes:

0.098	Constituent concentration was detected above the reporting limit.
mg/kg	Milligrams per kilogram.
ft bls	Feet below land surface.
U	Constituent concentration was qualified as nondetect.
J	Constituent concentration was estimated.
VOC	Volatile Organic Compounds.

Table 4-11
November 2010 VAP Sampling Analytical Data
SWMU 39
Fort Stewart, Georgia

		Location ID	F39B-2	F39B-2	F39B-2	F39B-5	F39B-5	F39B-5	F39B-6	F39B-6	F39C-12	F39C-12	F39C-14	F39C-14	F39C-14	F39D-23	F39D-23	F39D-23	F39D-25	F39D-25	F39D-25	F39D-26	F39D-27
		Depth Interval (ft bgs)	30-34	36-40	42-46	30-34	36-40	42-46	30-34	36-40	30-34	36-40	30-34	36-40	42-46	30-34	36-40	42-46	30-34	36-40	42-46	33-35	30-34
		Sample Date	11/2/2010	11/2/2010	11/2/2010	11/3/2010	11/3/2010	11/3/2010	11/9/2010	11/9/2010	11/3/2010	11/3/2010	11/4/2010	11/4/2010	11/4/2010	11/4/2010	11/4/2010	11/4/2010	11/2/2010	11/2/2010	11/2/2010	11/2/2010	11/5/2010
Chemical Name	**Tap Water RSL[1]**	**MCL[2]**																					
Volatile Organic Compounds (µg/L)																							
1,1,1-Trichloroethane	7500	200	< 0.5 U	< 0.5 U	< 0.5 U	< 0.5 U	< 0.5 U	< 0.5 U	< 0.5 U	< 0.5 U	< 0.5 U	< 0.5 U	< 0.5 U	< 1 U	< 0.5 U	< 0.5 U	< 0.5 U	< 0.5 U	< 5 U	< 0.5 U	< 0.5 U	< 5 U	< 0.5 U
1,1,2,2-Tetrachloroethane	0.066		< 0.5 U	< 0.5 U	< 0.5 U	< 0.5 U	< 0.5 U	< 0.5 U	< 0.5 U	< 0.5 U	< 0.5 U	< 0.5 U	< 0.5 U	< 1 U	< 0.5 U	< 0.5 U	< 0.5 U	< 0.5 U	< 5 U	< 0.5 U	< 0.5 U	< 5 U	< 0.5 U
1,1,2-Trichloro-1,2,2-Trifluoroethane	53000		< 0.5 U	< 0.5 U	< 0.5 U	< 0.5 U	< 0.5 U	< 0.5 U	< 0.5 U	< 0.5 U	< 0.5 U	< 0.5 U	< 0.5 U	< 1 U	< 0.5 U	< 0.5 U	< 0.5 U	< 0.5 U	< 5 U	< 0.5 U	< 0.5 U	< 5 U	< 0.5 U
1,1,2-Trichloroethane	0.24	5	< 0.5 U	< 0.5 U	< 0.5 U	< 0.5 U	< 0.5 U	< 0.5 U	< 0.5 U	< 0.5 U	< 0.5 U	< 0.5 U	< 0.5 U	< 1 U	< 0.5 U	< 0.5 U	< 0.5 U	< 0.5 U	< 5 U	< 0.5 U	< 0.5 U	< 5 U	< 0.5 U
1,1-Dichloroethane	2.4		< 0.5 U	< 0.5 U	< 0.5 U	< 0.5 U	< 0.5 U	< 0.5 U	< 0.5 U	< 0.5 U	< 0.5 U	< 0.5 U	< 0.5 U	< 1 U	< 0.5 U	< 0.5 U	**0.21 J**	< 0.5 U	< 5 U	< 0.5 U	< 0.5 U	< 5 U	< 0.5 U
1,1-Dichloroethene	260	7	< 0.5 U	< 0.5 U	< 0.5 U	< 0.5 U	< 0.5 U	< 0.5 U	< 0.5 U	< 0.5 U	< 0.5 U	< 0.5 U	< 0.5 U	< 1 U	< 0.5 U	**0.11 J**	**0.22 J**	< 0.5 U	**3.5 J**	**1.7**	**0.18 J**	**2.3 J**	< 0.5 U
1,2,4-Trichlorobenzene	0.99	70	< 0.5 U	< 0.5 U	< 0.5 U	< 0.5 U	< 0.5 U	< 0.5 U	< 0.5 U	< 0.5 U	< 0.5 U	< 0.5 U	< 0.5 U	< 1 U	< 0.5 U	< 0.5 U	< 0.5 U	< 0.5 U	< 5 U	< 0.5 U	< 0.5 U	< 5 U	< 0.5 U
1,2-Dibromo-3-chloropropane (DBCP)	0.00032	0.2	< 0.5 U	< 0.5 U	< 0.5 U	< 0.5 U	< 0.5 U	< 0.5 U	< 0.5 U	< 0.5 U	< 0.5 U	< 0.5 U	< 0.5 U	< 1 U	< 0.5 U	< 0.5 U	< 0.5 U	< 0.5 U	< 5 U	< 0.5 U	< 0.5 U	< 5 U	< 0.5 U
1,2-Dibromoethane	0.0065	0.05	< 0.5 U	< 0.5 U	< 0.5 U	< 0.5 U	< 0.5 U	< 0.5 U	< 0.5 U	< 0.5 U	< 0.5 U	< 0.5 U	< 0.5 U	< 1 U	< 0.5 U	< 0.5 U	< 0.5 U	< 0.5 U	< 5 U	< 0.5 U	< 0.5 U	< 5 U	< 0.5 U
1,2-Dichlorobenzene	280	600	< 0.5 U	< 0.5 U	< 0.5 U	< 0.5 U	< 0.5 U	< 0.5 U	< 0.5 U	< 0.5 U	< 0.5 U	< 0.5 U	< 0.5 U	< 1 U	< 0.5 U	< 0.5 U	< 0.5 U	< 0.5 U	< 5 U	< 0.5 U	< 0.5 U	< 5 U	< 0.5 U
1,2-Dichloroethane	0.15	5	< 0.5 U	< 0.5 U	< 0.5 U	< 0.5 U	< 0.5 U	< 0.5 U	< 0.5 U	< 0.5 U	< 0.5 U	< 0.5 U	< 0.5 U	< 1 U	< 0.5 U	< 0.5 U	< 0.5 U	< 0.5 U	< 5 U	< 0.5 U	< 0.5 U	< 5 U	< 0.5 U
1,2-Dichloropropane	0.38	5	< 0.5 U	< 0.5 U	< 0.5 U	< 0.5 U	< 0.5 U	< 0.5 U	< 0.5 U	< 0.5 U	< 0.5 U	< 0.5 U	< 0.5 U	< 1 U	< 0.5 U	< 0.5 U	< 0.5 U	< 0.5 U	< 5 U	< 0.5 U	< 0.5 U	< 5 U	< 0.5 U
1,3-Dichlorobenzene			< 0.5 U	< 0.5 U	< 0.5 U	< 0.5 U	< 0.5 U	< 0.5 U	< 0.5 U	< 0.5 U	< 0.5 U	< 0.5 U	< 0.5 U	< 1 U	< 0.5 U	< 0.5 U	< 0.5 U	< 0.5 U	< 5 U	< 0.5 U	< 0.5 U	< 5 U	< 0.5 U
1,4-Dichlorobenzene	0.42	75	< 0.5 U	< 0.5 U	< 0.5 U	< 0.5 U	< 0.5 U	< 0.5 U	< 0.5 U	< 0.5 U	< 0.5 U	< 0.5 U	< 0.5 U	< 1 U	< 0.5 U	< 0.5 U	< 0.5 U	< 0.5 U	< 5 U	< 0.5 U	< 0.5 U	< 5 U	< 0.5 U
2-Butanone	4900		< 10 U	< 10 U	**6.1 J**	< 10 U	< 10 U	< 10 U	< 10 U	**11**	< 10 U	< 10 U	< 10 U	< 20 U	< 10 U	< 10 U	**2.9 J**	< 10 U	< 100 U	< 10 U	**9.1 J**	< 100 U	< 10 U
2-Hexanone	34		< 10 U	< 10 U	< 10 U	< 10 U	**0.38 J**	< 10 U	< 10 U	< 10 U	< 10 U	< 10 U	< 10 U	< 20 U	< 10 U	< 10 U	< 10 U	< 10 U	< 100 U	**0.28 J**	< 10 U	< 100 U	< 10 U
4-Methyl-2-pentanone	1000		< 10 U	< 10 U	< 10 U	< 10 U	< 10 U	< 10 U	< 10 U	< 10 U	< 10 U	< 10 U	< 10 U	< 20 U	< 10 U	< 10 U	< 10 U	< 10 U	< 100 U	< 10 U	< 10 U	< 100 U	< 10 U
Acetone	12000		< 10 U	< 10 U	**36**	< 10 U	< 10 U	**19 UB**	**20**	**45**	**4.5 UB**	**9.1 UB**	**3.8 J**	< 20 U	< 10 U	< 10 U	**4.1 J**	**5.9 J**	< 100 U	**23**	**20 UB**	< 100 U	**7.3 UB**
Benzene	0.39	5	**0.12 J**	**0.31 J**	**0.67**	< 0.5 U	**0.23 J**	**0.18 J**	**0.62**	**0.53**	< 0.5 U	**0.24 J**	**0.12 J**	**0.22 J**	**0.1 J**	**0.11 J**	**0.21 J**	**0.24 J**	< 5 U	**1.4**	**0.68**	< 5 U	**0.4 J**
Benzene, 1-methylethyl	390		< 0.5 U	< 0.5 U	< 0.5 U	< 0.5 U	< 0.5 U	< 0.5 U	< 0.5 U	< 0.5 U	< 0.5 U	< 0.5 U	< 0.5 U	< 1 U	< 0.5 U	< 0.5 U	< 0.5 U	< 0.5 U	< 5 U	< 0.5 U	< 0.5 U	< 5 U	< 0.5 U
Bromodichloromethane	0.12		< 0.5 U	< 0.5 U	< 0.5 U	< 0.5 U	< 0.5 U	< 0.5 U	< 0.5 U	< 0.5 U	< 0.5 U	< 0.5 U	< 0.5 U	< 1 U	< 0.5 U	< 0.5 U	< 0.5 U	< 0.5 U	< 5 U	< 0.5 U	< 0.5 U	< 5 U	< 0.5 U
Bromomethane	7		< 0.5 UJ	< 0.5 UJ	< 0.5 UJ	< 0.5 UJ	< 0.5 UJ	< 0.5 U	< 0.5 U	< 0.5 U	< 0.5 UJ	< 0.5 UJ	< 0.5 U	< 1 U	< 0.5 U	< 0.5 U	< 0.5 U	< 0.5 U	< 5 UJ	< 0.5 UJ	< 0.5 U	< 5 UJ	< 0.5 U
Carbon disulfide	720		**0.37 J**	< 0.5 U	< 0.5 U	**0.35 J**	< 0.5 U	< 0.5 U	< 0.5 U	< 0.5 U	**0.47 J**	< 0.5 U	**0.99**	**0.6 UB**	< 0.5 U	**0.52 UB**	**0.7 UB**	< 0.5 U	< 5 U	< 0.5 U	< 0.5 U	< 5 U	< 0.5 U
Carbon tetrachloride	0.39	5	< 0.5 U	< 0.5 U	< 0.5 U	< 0.5 U	< 0.5 U	< 0.5 U	< 0.5 U	< 0.5 U	< 0.5 U	< 0.5 U	< 0.5 U	< 1 U	< 0.5 U	< 0.5 U	< 0.5 U	< 0.5 U	< 5 U	< 0.5 U	< 0.5 U	< 5 U	< 0.5 U
CFC-11	1100		< 0.5 U	< 0.5 U	< 0.5 U	< 0.5 U	< 0.5 U	< 0.5 U	< 0.5 U	< 0.5 U	< 0.5 U	< 0.5 U	< 0.5 U	< 1 U	< 0.5 U	< 0.5 U	< 0.5 U	< 0.5 U	< 5 U	< 0.5 U	< 0.5 U	< 5 U	< 0.5 U
CFC-12	190		< 0.5 U	< 0.5 U	< 0.5 U	< 0.5 U	< 0.5 U	< 0.5 U	< 0.5 U	< 0.5 U	< 0.5 U	< 0.5 U	< 0.5 U	< 1 U	< 0.5 U	< 0.5 U	< 0.5 U	< 0.5 U	< 5 U	< 0.5 U	< 0.5 U	< 5 U	< 0.5 U
Chlorobenzene	72	100	< 0.5 U	< 0.5 U	< 0.5 U	< 0.5 U	< 0.5 U	< 0.5 U	< 0.5 U	< 0.5 U	< 0.5 U	< 0.5 U	< 0.5 U	< 1 U	< 0.5 U	< 0.5 U	< 0.5 U	< 0.5 U	< 5 U	< 0.5 U	< 0.5 U	< 5 U	< 0.5 U
Chloroethane	21000		< 0.5 U	< 0.5 U	< 0.5 U	< 0.5 U	< 0.5 U	< 0.5 U	< 0.5 U	< 0.5 U	< 0.5 U	< 0.5 U	< 0.5 U	< 1 U	< 0.5 U	< 0.5 U	< 0.5 U	< 0.5 U	< 5 U	< 0.5 U	< 0.5 U	< 5 U	< 0.5 U
Chloroform	0.19		< 0.5 U	< 0.5 U	< 0.5 U	< 0.5 U	< 0.5 U	< 0.5 U	< 0.5 U	< 0.5 U	< 0.5 U	< 0.5 U	< 0.5 U	< 1 U	< 0.5 U	< 0.5 U	< 0.5 U	< 0.5 U	< 5 U	< 0.5 U	< 0.5 U	< 5 U	< 0.5 U
Chloromethane	190		< 0.5 U	< 0.5 U	**1.1**	< 0.5 U	< 0.5 U	< 0.5 U	< 0.5 U	< 0.5 U	< 0.5 U	**0.67**	< 0.5 U	< 1 U	< 0.5 U	< 0.5 U	< 0.5 U	< 0.5 U	< 5 U	< 0.5 U	< 0.5 U	< 5 U	< 0.5 U
cis-1,2-Dichloroethene	28	70	< 0.5 U	**0.41 J**	**1.4**	< 0.5 U	< 0.5 U	< 0.5 U	**1.3**	**6.2**	< 0.5 U	< 0.5 U	< 0.5 U	< 1 U	< 0.5 U	**2.1**	**15**	**6.3**	**380**	**190**	**15**	**220**	**10**
cis-1,3-Dichloropropene			< 0.5 U	< 0.5 U	< 0.5 U	< 0.5 U	< 0.5 U	< 0.5 U	< 0.5 U	< 0.5 U	< 0.5 U	< 0.5 U	< 0.5 U	< 1 U	< 0.5 U	< 0.5 U	< 0.5 U	< 0.5 U	< 5 U	< 0.5 U	< 0.5 U	< 5 U	< 0.5 U
Cyclohexane	13000		< 0.5 U	< 0.5 U	< 0.5 U	< 0.5 U	< 0.5 U	< 0.5 U	< 0.5 U	< 0.5 U	< 0.5 U	< 0.5 U	< 0.5 U	< 1 U	< 0.5 U	< 0.5 U	< 0.5 U	< 0.5 U	< 5 U	**0.71**	< 0.5 U	< 5 U	< 0.5 U
Dibromochloromethane	0.15		< 0.5 U	< 0.5 U	< 0.5 U	< 0.5 U	< 0.5 U	< 0.5 U	< 0.5 U	< 0.5 U	< 0.5 U	< 0.5 U	< 0.5 U	< 1 U	< 0.5 U	< 0.5 U	< 0.5 U	< 0.5 U	< 5 U	< 0.5 U	< 0.5 U	< 5 U	< 0.5 U
Ethylbenzene	1.3	700	< 0.5 U	< 0.5 U	< 0.5 U	< 0.5 U	< 0.5 U	< 0.5 U	< 0.5 U	< 0.5 U	< 0.5 U	< 0.5 U	< 0.5 U	< 1 U	< 0.5 U	< 0.5 U	< 0.5 U	< 0.5 U	< 5 U	< 0.5 U	< 0.5 U	< 5 U	< 0.5 U
Methyl acetate	16000		< 1 UJ	< 1 UJ	< 1 UJ	< 1 UJ	< 1 UJ	< 1 U	< 1 U	< 1 U	< 1 UJ	< 1 UJ	< 1 U	< 2 U	< 1 U	< 1 U	< 1 U	< 1 U	< 10 UJ	< 1 UJ	< 1 U	< 10 UJ	< 1 U
Methyl tert-butyl ether	12		< 0.5 U	< 0.5 U	< 0.5 U	< 0.5 U	< 0.5 U	< 0.5 U	< 0.5 U	< 0.5 U	< 0.5 U	< 0.5 U	< 0.5 U	< 1 U	< 0.5 U	< 0.5 U	< 0.5 U	< 0.5 U	< 5 U	< 0.5 U	< 0.5 U	< 5 U	< 0.5 U
Methylcyclohexane			< 5 U	< 5 U	< 5 U	< 5 U	< 5 U	< 5 U	< 5 U	< 5 U	< 5 U	< 5 U	< 5 U	< 10 U	< 5 U	< 5 U	< 5 U	< 5 U	< 50 U	< 5 U	< 5 U	< 50 U	< 5 U
Methylene chloride	9.9	5	< 0.5 U	< 0.5 U	< 0.5 U	< 0.5 U	< 0.5 U	< 0.5 U	< 0.5 U	**0.99**	< 0.5 U	< 0.5 U	< 0.5 U	< 1 U	< 0.5 U	< 0.5 U	< 0.5 U	< 0.5 U	< 5 U	< 0.5 U	< 0.5 U	< 5 U	< 0.5 U
Styrene	1100	100	< 0.5 U	< 0.5 U	< 0.5 U	< 0.5 U	< 0.5 U	< 0.5 U	< 0.5 U	< 0.5 U	< 0.5 U	< 0.5 U	< 0.5 U	< 1 U	< 0.5 U	< 0.5 U	< 0.5 U	< 0.5 U	< 5 U	< 0.5 U	< 0.5 U	< 5 U	< 0.5 U
Tetrachloroethene	9.7	5	< 0.5 U	**0.61**	< 0.5 U	< 0.5 U	< 0.5 U	< 0.5 U	**19**	**37**	< 0.5 U	**0.12 J**	**1.7**	**0.65 J**	**0.13 J**	**0.16 J**	**10**	**0.2 J**	**82**	**6.9**	**0.21 J**	**260**	**0.23 J**
Toluene	860	1000	**0.24 J**	**0.51**	**0.55**	< 0.5 U	**0.33 J**	**0.69 UB**	**1.4**	**1.2**	**0.19 J**	**0.54**	< 0.5 U	**0.43 J**	**0.18 J**	**0.22 J**	**0.32 J**	**0.25 J**	< 5 U	**1.6**	**1.8 UB**	< 5 U	**0.65 UB**
trans-1,2-Dichloroethene	86	100	< 0.5 U	< 0.5 U	< 0.5 U	< 0.5 U	< 0.5 U	< 0.5 U	< 0.5 U	< 0.5 U	< 0.5 U	< 0.5 U	< 0.5 U	< 1 U	< 0.5 U	**0.23 J**	**0.8**	< 0.5 U	**9.4**	**4.5**	**0.19 J**	**9**	< 0.5 U
trans-1,3-Dichloropropene			< 0.5 U	< 0.5 U	< 0.5 U	< 0.5 U	< 0.5 U	< 0.5 U	< 0.5 U	< 0.5 U	< 0.5 U	< 0.5 U	< 0.5 U	< 1 U	< 0.5 U	< 0.5 U	< 0.5 U	< 0.5 U	< 5 U	< 0.5 U	< 0.5 U	< 5 U	< 0.5 U
Tribromomethane	7.9		< 0.5 U	< 0.5 U	< 0.5 U	< 0.5 U	< 0.5 U	< 0.5 U	< 0.5 U	< 0.5 U	< 0.5 U	< 0.5 U	< 0.5 U	< 1 U	< 0.5 U	< 0.5 U	< 0.5 U	< 0.5 U	< 5 U	< 0.5 U	< 0.5 U	< 5 U	< 0.5 U
Trichloroethene	0.44	5	< 0.5 U	**2.8**	**2.1**	< 0.5 U	< 0.5 U	< 0.5 U	**4.8**	**15**	< 0.5 U	< 0.5 U	**0.61**	**2.7**	**0.28 J**	**7.3**	**68**	**6.4**	**1300**	**270**	**6.2**	**1100**	**9.5**
Vinyl chloride	0.015	2	< 0.5 UJ	< 0.5 UJ	< 0.5 UJ	< 0.5 UJ	< 0.5 UJ	< 0.5 U	< 0.5 U	< 0.5 U	< 0.5 UJ	< 0.5 UJ	< 0.5 U	< 1 U	< 0.5 U	< 0.5 U	< 0.5 U	< 0.5 U	< 5 UJ	**0.81 J**	< 0.5 U	< 5 UJ	< 0.5 U
Xylenes (total)	190	10000	**0.2 J**	**0.36 J**	< 0.5 U	< 0.5 U	< 0.5 U	< 0.5 U	< 0.5 U	< 0.5 U	< 0.5 U	**0.55**	< 0.5 U	< 1 U	< 0.5 U	< 0.5 U	**0.17 J**	< 0.5 U	< 5 U	**0.56**	< 0.5 U	< 5 U	< 0.5 U

Notes:

Detections are boldface.

[1] U.S. EPA Regional Screening Level for tap water as of November 2012

[2] U.S. EPA Maximum Contaminant Level as of November 2012

Exceedences of the screening criteria are shaded gray

Sample results were screened against the tap water RSL. If there is no RSL available, then the MCL was used.

µg/L Micrograms per liter.

ft bgs Feet below ground surface.

B Detected in method blank.

J Constituent concentration was estimated.

U Not detected at laboratory detection limit.

Table 4-11
November 2010 VAP Sampling Analytical Data
SWMU 39
Fort Stewart, Georgia

		Location ID	F39D-27	F39D-27	F39D-28	F39D-28	F39D-30	F39D-30	F39D-30	F39E-7	F39E-7	F39E-8	F39E-8	F39E-8	F39E-9	F39E-9	F39E-9	F39E-10	F39E-10	F39E-10	F39E-11	F39E-11	F39E-11
		Depth Interval (ft bgs)	36-40	42-46	30-34	42-46	30-34	36-40	42-46	30-34	42-46	30-34	36-40	42-46	30-34	36-40	42-46	30-34	36-40	42-46	30-34	36-40	42-46
		Sample Date	11/5/2010	11/5/2010	11/5/2010	11/5/2010	11/3/2010	11/3/2010	11/3/2010	11/8/2010	11/8/2010	11/9/2010	11/9/2010	11/9/2010	11/10/2010	11/10/2010	11/10/2010	11/10/2010	11/10/2010	11/10/2010	11/8/2010	11/8/2010	11/8/2010
Chemical Name	**Tap Water RSL[1]**	**MCL[2]**																					
Volatile Organic Compounds (µg/L)																							
1,1,1-Trichloroethane	7500	200	< 0.5 U	< 0.5 U	< 0.5 U	< 0.5 U	< 0.5 U	< 0.5 U	< 1 U	< 0.5 U	< 0.5 U	< 0.5 U	< 0.5 U	< 0.5 U	< 0.5 U	< 0.5 U	< 0.5 U	< 0.5 U	< 0.5 U	< 0.5 U	< 0.5 U	< 0.5 U	< 0.5 U
1,1,2,2-Tetrachloroethane	0.066		< 0.5 U	< 0.5 U	< 0.5 U	< 0.5 U	< 0.5 U	< 0.5 U	< 1 U	< 0.5 U	< 0.5 U	< 0.5 U	< 0.5 U	< 0.5 U	< 0.5 U	< 0.5 U	< 0.5 U	< 0.5 U	< 0.5 U	< 0.5 U	< 0.5 U	< 0.5 U	< 0.5 U
1,1,2-Trichloro-1,2,2-Trifluoroethane	53000		< 0.5 U	< 0.5 U	< 0.5 U	< 0.5 U	< 0.5 U	< 0.5 U	< 1 U	< 0.5 U	< 0.5 U	< 0.5 U	< 0.5 U	< 0.5 U	< 0.5 U	< 0.5 U	< 0.5 U	< 0.5 U	< 0.5 U	< 0.5 U	< 0.5 U	< 0.5 U	< 0.5 U
1,1,2-Trichloroethane	0.24	5	< 0.5 U	< 0.5 U	< 0.5 U	< 0.5 U	< 0.5 U	< 0.5 U	< 1 U	< 0.5 U	< 0.5 U	< 0.5 U	< 0.5 U	< 0.5 U	< 0.5 U	< 0.5 U	< 0.5 U	< 0.5 U	< 0.5 U	< 0.5 U	< 0.5 U	< 0.5 U	< 0.5 U
1,1-Dichloroethane	2.4		< 0.5 U	< 0.5 U	< 0.5 U	< 0.5 U	**0.12 J**	**25**	**17**	< 0.5 U	< 0.5 U	< 0.5 U	< 0.5 U	< 0.5 U	< 0.5 U	< 0.5 U	< 0.5 U	< 0.5 U	< 0.5 U	< 0.5 U	**0.25 J**	**0.12 J**	< 0.5 U
1,1-Dichloroethene	260	7	< 0.5 U	< 0.5 U	**0.31 J**	< 0.5 U	**0.25 J**	**40**	**8.3**	< 0.5 U	< 0.5 U	< 0.5 U	< 0.5 U	< 0.5 U	**0.39 J**	< 0.5 U	< 0.5 U	< 0.5 U	< 0.5 U	< 0.5 U	**0.26 J**	< 0.5 U	< 0.5 U
1,2,4-Trichlorobenzene	0.99	70	< 0.5 U	< 0.5 U	< 0.5 U	< 0.5 U	< 0.5 U	< 0.5 U	< 1 U	< 0.5 U	< 0.5 U	< 0.5 U	< 0.5 U	< 0.5 U	< 0.5 U	< 0.5 U	< 0.5 U	< 0.5 U	< 0.5 U	< 0.5 U	< 0.5 U	< 0.5 U	< 0.5 U
1,2-Dibromo-3-chloropropane (DBCP)	0.00032	0.2	< 0.5 U	< 0.5 U	< 0.5 U	< 0.5 U	< 0.5 U	< 0.5 U	< 1 U	< 0.5 U	< 0.5 U	< 0.5 U	< 0.5 U	< 0.5 U	< 0.5 U	< 0.5 U	< 0.5 U	< 0.5 U	< 0.5 U	< 0.5 U	< 0.5 U	< 0.5 U	< 0.5 U
1,2-Dibromoethane	0.0065	0.05	< 0.5 U	< 0.5 U	< 0.5 U	< 0.5 U	< 0.5 U	< 0.5 U	< 1 U	< 0.5 U	< 0.5 U	< 0.5 U	< 0.5 U	< 0.5 U	< 0.5 U	< 0.5 U	< 0.5 U	< 0.5 U	< 0.5 U	< 0.5 U	< 0.5 U	< 0.5 U	< 0.5 U
1,2-Dichlorobenzene	280	600	< 0.5 U	< 0.5 U	< 0.5 U	< 0.5 U	< 0.5 U	< 0.5 U	< 1 U	< 0.5 U	< 0.5 U	< 0.5 U	< 0.5 U	< 0.5 U	< 0.5 U	< 0.5 U	< 0.5 U	< 0.5 U	< 0.5 U	< 0.5 U	< 0.5 U	< 0.5 U	< 0.5 U
1,2-Dichloroethane	0.15	5	< 0.5 U	< 0.5 U	< 0.5 U	< 0.5 U	< 0.5 U	< 0.5 U	< 1 U	< 0.5 U	< 0.5 U	< 0.5 U	< 0.5 U	< 0.5 U	< 0.5 U	< 0.5 U	< 0.5 U	< 0.5 U	< 0.5 U	< 0.5 U	< 0.5 U	< 0.5 U	< 0.5 U
1,2-Dichloropropane	0.38	5	< 0.5 U	< 0.5 U	< 0.5 U	< 0.5 U	< 0.5 U	< 0.5 U	< 1 U	< 0.5 U	< 0.5 U	< 0.5 U	< 0.5 U	< 0.5 U	< 0.5 U	< 0.5 U	< 0.5 U	< 0.5 U	< 0.5 U	< 0.5 U	< 0.5 U	< 0.5 U	< 0.5 U
1,3-Dichlorobenzene			< 0.5 U	< 0.5 U	< 0.5 U	< 0.5 U	< 0.5 U	< 0.5 U	< 1 U	< 0.5 U	< 0.5 U	< 0.5 U	< 0.5 U	< 0.5 U	< 0.5 U	< 0.5 U	< 0.5 U	< 0.5 U	< 0.5 U	< 0.5 U	< 0.5 U	< 0.5 U	< 0.5 U
1,4-Dichlorobenzene	0.42	75	< 0.5 U	< 0.5 U	< 0.5 U	< 0.5 U	< 0.5 U	< 0.5 U	< 1 U	< 0.5 U	< 0.5 U	< 0.5 U	< 0.5 U	< 0.5 U	< 0.5 U	< 0.5 U	< 0.5 U	< 0.5 U	< 0.5 U	< 0.5 U	< 0.5 U	< 0.5 U	< 0.5 U
2-Butanone	4900		< 10 U	< 10 U	< 10 U	**4.6 J**	< 10 U	**2.2 J**	< 20 U	< 10 U	**3.7 J**	< 10 U	< 10 U	< 10 U	**9.7 J**	**7.6 J**	< 10 U	< 10 U	**3.6 J**	**3.2 J**	< 10 U	**11**	**6 J**
2-Hexanone	34		< 10 U	< 10 U	< 10 U	< 10 U	< 10 U	< 10 U	< 20 U	< 10 U	< 10 U	< 10 U	< 10 U	< 10 U	< 10 U	**0.81 J**	**0.38 J**	< 10 U	**0.28 J**	**0.41 J**	< 10 U	**1 J**	**0.63 J**
4-Methyl-2-pentanone	1000		< 10 U	< 10 U	< 10 U	< 10 U	< 10 U	< 10 U	< 20 U	< 10 U	< 10 U	< 10 U	< 10 U	< 10 U	< 10 U	< 10 U	< 10 U	< 10 U	< 10 U	< 10 U	< 10 U	< 10 U	< 10 U
Acetone	12000		**6.7 UB**	**15 UB**	**7 UB**	**30 UB**	< 10 U	**8.3 J**	**30**	**9.3 UB**	**47 UB**	**21**	**24**	**63**	**4.8 J**	**26**	**11**	**8.4 J**	**16**	**16**	< 10 U	**45 UB**	**20 UB**
Benzene	0.39	5	**0.21 J**	**0.89**	**0.26 J**	**0.47 J**	< 0.5 U	**0.58**	**1.1**	< 0.5 U	**0.26 J**	**0.69**	**0.41 J**	**0.55**	**0.15 J**	**2.1**	**0.44 J**	**0.18 J**	**0.87**	**0.36 J**	**0.15 J**	**1.7**	**0.65**
Benzene, 1-methylethyl	390		< 0.5 U	< 0.5 U	< 0.5 U	< 0.5 U	< 0.5 U	< 0.5 U	< 1 U	< 0.5 U	< 0.5 U	< 0.5 U	< 0.5 U	< 0.5 U	< 0.5 U	< 0.5 U	< 0.5 U	< 0.5 U	< 0.5 U	< 0.5 U	< 0.5 U	< 0.5 U	< 0.5 U
Bromodichloromethane	0.12		< 0.5 U	< 0.5 U	< 0.5 U	< 0.5 U	< 0.5 U	< 0.5 U	< 1 U	< 0.5 U	< 0.5 U	< 0.5 U	< 0.5 U	< 0.5 U	< 0.5 U	< 0.5 U	< 0.5 U	< 0.5 U	< 0.5 U	< 0.5 U	< 0.5 U	< 0.5 U	< 0.5 U
Bromomethane	7		< 0.5 U	< 0.5 U	< 0.5 U	< 0.5 U	< 0.5 U	< 0.5 U	< 1 U	< 0.5 U	< 0.5 U	< 0.5 U	< 0.5 U	< 0.5 U	< 0.5 U	< 0.5 U	< 0.5 U	< 0.5 U	< 0.5 U	< 0.5 U	< 0.5 U	< 0.5 U	< 0.5 U
Carbon disulfide	720		< 0.5 U	**0.4 J**	< 0.5 U	**0.39 J**	**0.44 UB**	< 0.5 U	< 1 U	**0.42 J**	**0.12 J**	< 0.5 U	< 0.5 U	< 0.5 U	< 0.5 U	< 0.5 U	< 0.5 U	< 0.5 U	< 0.5 U	< 0.5 U	**0.8**	< 0.5 U	< 0.5 U
Carbon tetrachloride	0.39	5	< 0.5 U	< 0.5 U	< 0.5 U	< 0.5 U	< 0.5 U	< 0.5 U	< 1 U	< 0.5 U	< 0.5 U	< 0.5 U	< 0.5 U	< 0.5 U	< 0.5 U	< 0.5 U	< 0.5 U	< 0.5 U	< 0.5 U	< 0.5 U	< 0.5 U	< 0.5 U	< 0.5 U
CFC-11	1100		< 0.5 U	< 0.5 U	< 0.5 U	< 0.5 U	< 0.5 U	< 0.5 U	< 1 U	< 0.5 U	< 0.5 U	< 0.5 U	< 0.5 U	< 0.5 U	< 0.5 U	< 0.5 U	< 0.5 U	< 0.5 U	< 0.5 U	< 0.5 U	< 0.5 U	< 0.5 U	< 0.5 U
CFC-12	190		< 0.5 U	< 0.5 U	< 0.5 U	**0.21 J**	< 0.5 U	< 0.5 U	< 1 U	< 0.5 U	< 0.5 U	< 0.5 U	< 0.5 U	< 0.5 U	< 0.5 U	< 0.5 U	< 0.5 U	< 0.5 U	< 0.5 U	< 0.5 U	< 0.5 U	< 0.5 U	< 0.5 U
Chlorobenzene	72	100	< 0.5 U	< 0.5 U	< 0.5 U	< 0.5 U	< 0.5 U	< 0.5 U	< 1 U	< 0.5 U	< 0.5 U	< 0.5 U	< 0.5 U	< 0.5 U	< 0.5 U	< 0.5 U	< 0.5 U	< 0.5 U	< 0.5 U	< 0.5 U	< 0.5 U	< 0.5 U	< 0.5 U
Chloroethane	21000		< 0.5 U	< 0.5 U	< 0.5 U	< 0.5 U	< 0.5 U	< 0.5 U	< 1 U	< 0.5 U	< 0.5 U	< 0.5 U	< 0.5 U	< 0.5 U	< 0.5 U	< 0.5 U	< 0.5 U	< 0.5 U	< 0.5 U	< 0.5 U	< 0.5 U	< 0.5 U	< 0.5 U
Chloroform	0.19		< 0.5 U	< 0.5 U	< 0.5 U	< 0.5 U	< 0.5 U	< 0.5 U	< 1 U	< 0.5 U	< 0.5 U	< 0.5 U	< 0.5 U	**0.37 J**	< 0.5 U	< 0.5 U	< 0.5 U	< 0.5 U	< 0.5 U	< 0.5 U	< 0.5 U	< 0.5 U	< 0.5 U
Chloromethane	190		< 0.5 U	< 0.5 U	< 0.5 U	**1.2**	< 0.5 U	< 0.5 U	**4.1**	< 0.5 U	< 0.5 U	< 0.5 U	< 0.5 U	< 0.5 U	< 0.5 U	< 0.5 U	< 0.5 U	< 0.5 U	< 0.5 U	< 0.5 U	< 0.5 U	< 0.5 U	< 0.5 U
cis-1,2-Dichloroethene	28	70	**0.24 J**	< 0.5 U	**60**	< 0.5 U	**20**	**4.1**	**1.2**	**19**	**0.49 J**	**3.9**	**0.37 J**	**0.38 J**	**30**	**3.1**	**0.27 J**	**0.44 J**	< 0.5 U	< 0.5 U	**6.8**	**13**	**2**
cis-1,3-Dichloropropene			< 0.5 U	< 0.5 U	< 0.5 U	< 0.5 U	< 0.5 U	< 0.5 U	< 1 U	< 0.5 U	< 0.5 U	< 0.5 U	< 0.5 U	< 0.5 U	< 0.5 U	< 0.5 U	< 0.5 U	< 0.5 U	< 0.5 U	< 0.5 U	< 0.5 U	< 0.5 U	< 0.5 U
Cyclohexane	13000		< 0.5 U	< 0.5 U	< 0.5 U	< 0.5 U	< 0.5 U	< 0.5 U	< 1 U	< 0.5 U	< 0.5 U	< 0.5 U	< 0.5 U	< 0.5 U	< 0.5 U	< 0.5 U	< 0.5 U	< 0.5 U	< 0.5 U	< 0.5 U	< 0.5 U	< 0.5 U	< 0.5 U
Dibromochloromethane	0.15		< 0.5 U	< 0.5 U	< 0.5 U	< 0.5 U	< 0.5 U	< 0.5 U	< 1 U	< 0.5 U	< 0.5 U	< 0.5 U	< 0.5 U	< 0.5 U	< 0.5 U	< 0.5 U	< 0.5 U	< 0.5 U	< 0.5 U	< 0.5 U	< 0.5 U	< 0.5 U	< 0.5 U
Ethylbenzene	1.3	700	< 0.5 U	< 0.5 U	< 0.5 U	< 0.5 U	< 0.5 U	< 0.5 U	< 1 U	< 0.5 U	< 0.5 U	< 0.5 U	< 0.5 U	< 0.5 U	< 0.5 U	**0.44 J**	< 0.5 U	< 0.5 U	< 0.5 U	< 0.5 U	< 0.5 U	< 0.5 U	< 0.5 U
Methyl acetate	16000		< 1 U	< 1 U	< 1 U	< 1 U	< 1 U	< 1 U	< 2 U	< 1 U	< 1 U	< 1 U	< 1 U	< 1 U	< 1 U	< 1 U	< 1 U	< 1 U	< 1 U	< 1 U	< 1 U	< 1 U	< 1 U
Methyl tert-butyl ether	12		< 0.5 U	< 0.5 U	< 0.5 U	< 0.5 U	< 0.5 U	< 0.5 U	< 1 U	< 0.5 U	< 0.5 U	< 0.5 U	< 0.5 U	< 0.5 U	< 0.5 U	< 0.5 U	< 0.5 U	< 0.5 U	< 0.5 U	< 0.5 U	< 0.5 U	< 0.5 U	< 0.5 U
Methylcyclohexane			< 5 U	< 5 U	< 5 U	< 5 U	< 5 U	< 5 U	< 10 U	< 5 U	< 5 U	< 5 U	< 5 U	< 5 U	< 5 U	< 5 U	< 5 U	< 5 U	< 5 U	< 5 U	< 5 U	< 5 U	< 5 U
Methylene chloride	9.9	5	< 0.5 U	< 0.5 U	< 0.5 U	< 0.5 U	< 0.5 U	< 0.5 U	< 1 U	< 0.5 U	< 0.5 U	< 0.5 U	< 0.5 U	< 0.5 U	< 0.5 U	< 0.5 U	< 0.5 U	< 0.5 U	< 0.5 U	**0.84**	< 0.5 U	< 0.5 U	< 0.5 U
Styrene	1100	100	< 0.5 U	< 0.5 U	< 0.5 U	< 0.5 U	< 0.5 U	< 0.5 U	< 1 U	< 0.5 U	< 0.5 U	< 0.5 U	< 0.5 U	< 0.5 U	< 0.5 U	< 0.5 U	< 0.5 U	< 0.5 U	< 0.5 U	< 0.5 U	< 0.5 U	< 0.5 U	< 0.5 U
Tetrachloroethene	9.7	5	< 0.5 U	< 0.5 U	**5**	< 0.5 U	**0.23 J**	**0.79**	< 1 U	**0.28 J**	< 0.5 U	**8.9**	**1.2**	**1.5**	**95**	**1.5**	**0.71**	**0.35 J**	**0.11 J**	**0.12 J**	**19**	**2.2**	**0.2 J**
Toluene	860	1000	**0.9 UB**	**1.5**	**0.66 UB**	**0.55**	< 0.5 U	**1**	**1.1**	< 0.5 U	< 0.5 U	**0.79**	**1.1**	**1.1**	**0.64**	**2**	**0.73**	**0.8**	**1**	**0.78**	< 0.5 U	**1.3**	**0.65**
trans-1,2-Dichloroethene	86	100	< 0.5 U	< 0.5 U	**3.7**	< 0.5 U	**1.5**	**0.11 J**	< 1 U	**0.3 J**	< 0.5 U	< 0.5 U	< 0.5 U	< 0.5 U	< 0.5 U	< 0.5 U	< 0.5 U	< 0.5 U	< 0.5 U	< 0.5 U	**0.43 J**	**0.54**	< 0.5 U
trans-1,3-Dichloropropene			< 0.5 U	< 0.5 U	< 0.5 U	< 0.5 U	< 0.5 U	< 0.5 U	< 1 U	< 0.5 U	< 0.5 U	< 0.5 U	< 0.5 U	< 0.5 U	< 0.5 U	< 0.5 U	< 0.5 U	< 0.5 U	< 0.5 U	< 0.5 U	< 0.5 U	< 0.5 U	< 0.5 U
Tribromomethane	7.9		< 0.5 U	< 0.5 U	< 0.5 U	< 0.5 U	< 0.5 U	< 0.5 U	< 1 U	< 0.5 U	< 0.5 U	< 0.5 U	< 0.5 U	< 0.5 U	< 0.5 U	< 0.5 U	< 0.5 U	< 0.5 U	< 0.5 U	< 0.5 U	< 0.5 U	< 0.5 U	< 0.5 U
Trichloroethene	0.44	5	**0.31 J**	**0.49 J**	**110**	< 0.5 U	**13**	**8.8**	**1.4**	**24**	**0.25 J**	**14**	**1.2**	**2**	**140**	**6.4**	**0.67**	**1.4**	< 0.5 U	< 0.5 U	**27**	**13**	**0.5**
Vinyl chloride	0.015	2	< 0.5 U	< 0.5 U	< 0.5 U	< 0.5 U	< 0.5 U	< 0.5 U	< 1 U	< 0.5 U	< 0.5 U	< 0.5 U	< 0.5 U	< 0.5 U	< 0.5 U	< 0.5 U	< 0.5 U	< 0.5 U	< 0.5 U	< 0.5 U	< 0.5 U	< 0.5 U	< 0.5 U
Xylenes (total)	190	10000	< 0.5 U	**0.75**	< 0.5 U	**0.47 J**	**0.17 J**	**0.22 J**	< 1 U	< 0.5 U	**0.32 J**	< 0.5 U	< 0.5 U	< 0.5 U	< 0.5 U	**1.2**	**0.59**	< 0.5 U	**0.75**	**0.61**	< 0.5 U	**0.76**	**0.21 J**

Notes:

Detections are boldface.

[1] U.S. EPA Regional Screening Level for tap water as of November 2012

[2] U.S. EPA Maximum Contaminant Level as of November 2012

Exceedences of the screening criteria are shaded gray

Sample results were screened against the tap water RSL. If there is no RSL available, then the MCL was used.

µg/L Micrograms per liter.

ft bgs Feet below ground surface.

B Detected in method blank.

J Constituent concentration was estimated.

U Not detected at laboratory detection limit.

Table 4-12
January 2011 Water and Product Levels
SWMU 39
Fort Stewart, Georgia

Monitoring Well ID	TOC Elevation (feet amsl)	Depth to Product (feet btoc)	Depth to Water (feet btoc)	Water Elevation (feet amsl) (Calculated)*	Product Elevation (feet amsl)	Product Thickness (feet)
G4MW-001	74.82	5.92	6.69	68.82	68.9	0.77
G4MW-002	74.33	5.18	7.60	68.91	69.15	2.42
G4MW-003	74.57	ND	5.35	69.22	NA	NA
G4MW-004	74.51	ND	5.20	69.31	NA	NA
G4MW-005	74.29	NM	NM	NM	NA	NA
G4MW-006	74.38	NM	NM	NM	NA	NA
G4MW-007	74.74	ND	6.29	68.45	NA	NA
G4MW-008	74.36	ND	6.11	68.25	NA	NA
G4MW-009	74.75	ND	5.79	68.96	NA	NA
G4MW-010	74.23	ND	5.56	68.67	NA	NA
G4MW-011	74.08	ND	6.01	68.07	NA	NA
G4MW-012	74.27	ND	5.91	68.36	NA	NA
G4MW-013	74.70	ND	6.25	68.45	NA	NA
G4MW-014	74.96	ND	4.80	70.16	NA	NA
G4MW-015	74.82	ND	4.38	70.44	NA	NA
G4MW-016	72.28	ND	4.58	67.70	NA	NA
G4MW-017	71.84	ND	5.19	66.65	NA	NA
G4MW-018	74.27	ND	5.16	69.11	NA	NA
G4MW-019	74.76	ND	4.88	69.88	NA	NA
G4MW-020	74.64	ND	4.85	69.79	NA	NA
G4MW-021	74.18	ND	5.25	68.93	NA	NA
G4MW-022	72.59	ND	8.10	64.49	NA	NA
G4MW-023	75.58	ND	8.53	67.05	NA	NA
G4MW-024	74.41	ND	6.31	68.10	NA	NA
G4MW-025	74.52	ND	4.90	69.62	NA	NA
G4MW-026	76.01	ND	9.51	66.50	NA	NA
G4MW-027	76.50	ND	5.88	70.62	NA	NA
G4MW-028	82.91	ND	6.68	76.23	NA	NA
G4MW-029	84.07	ND	8.11	75.96	NA	NA
G4MW-030	67.64	ND	7.02	60.62	NA	NA
G4MW-031	78.96	ND	6.22	72.74	NA	NA
G4MW-032	74.27	ND	5.26	69.01	NA	NA
G4MW-033	74.23	ND	4.62	69.61	NA	NA
G4MW-034	70.19	ND	3.74	66.45	NA	NA
G4MW-035	70.52	ND	5.30	65.22	NA	NA
G4MW-036	83.62	ND	7.88	75.74	NA	NA
G4MW-037	82.47	ND	7.85	74.62	NA	NA
G4MW-038	85.12	ND	8.72	76.40	NA	NA
G4MW-039	86.02	ND	8.04	77.98	NA	NA
G4MW-040	72.21	ND	7.85	64.36	NA	NA
G4MW-041	84.24	ND	7.62	76.62	NA	NA
G4MW-042	77.24	ND	9.96	67.28	NA	NA
G4MW-043	72.58	ND	9.10	63.48	NA	NA
G4MW-044	75.64	ND	11.34	64.30	NA	NA
G4MW-045	75.44	ND	11.17	64.27	NA	NA
G4MW-046	77.15	ND	6.03	71.12	NA	NA
G4MW-047	77.09	ND	6.02	71.07	NA	NA
22-07R	75.38	ND	5.22	70.16	NA	NA

Notes:
*Water level compensated for the presence of Light Non-Aqueous Phase Liquids (LNAPL) if detected.
NA = Not Applicable.
ND = Not Detected.
NM = Not Measured.
amsl = above mean sea level.
btoc = below top of casing

Table 4-13
January 2011 Field Parameters
SWMU 39
Fort Stewart, Georgia

Location ID	Depth Interval (feet bgs)	Temperature (^{o}C)	pH (SU)	Conductivity (µmhos/cm)	Dissolved Oxygen (mg/L)	Oxidation-Reduction Potential (mV)	Turbidity (NTU)
G4MW010	5-15	18.34	6.06	300	0.58	-47.4	0.99
G4MW011	5-15	15.18	5.36	171	0.68	-32.9	15.5
G4MW013	4-14	18.81	6.31	400	2.12	60.6	3.9
G4MW016	3-13	15.48	4.21	173	1.60	97	207
G4MW017	2-12	13.56	4.60	168	4.50	197	20.4
G4MW018	2-12	18.80	4.26	174	0.38	15.4	9.99
G4MW019	2-12	19.28	5.18	325	0.54	-131.7	3.9
G4MW020	2-12	15.43	5.98	248	1.02	-49.3	8.01
G4MW022	3-13	17.35	4.71	234	2.76	-39	148
G4MW023	5-15	16.10	6.04	207	1.36	61.2	93.7
G4MW024	5-15	17.35	5.57	535	0.37	-69.5	2.11
G4MW025	3-13	14.58	4.22	233	0.71	135.3	9.27
G4MW026	9-19	20.45	4.71	58	0.80	-13	0.97
G4MW027	10-20	19.95	4.41	73	1.97	293	2.98
G4MW028	9-19	18.04	6.32	201	1.30	65	487
G4MW029	5-15	17.86	5.73	147	0.54	42.1	41.9
G4MW030	10-20	16.56	6.88	480	0.80	-88.8	0.53
G4MW031	10-20	19.90	4.95	88	1.31	-44.3	1.22
G4MW032	35-45	20.70	5.97	1,348	0.67	-118.1	NR
G4MW033	5-15	14.99	4.24	322	0.42	-21.7	1.59
G4MW034	40-45	18.16	7.33	492	0.76	-113	113
G4MW035	6-16	16.91	5.39	326	0.52	140	784
G4MW036	40-45	21.12	3.84	2,972	0.22	48.8	3.06
G4MW037	34.5-44.5	19.97	4.41	1,087	0.86	159	44.6
G4MW038	35-45	19.59	4.94	46	0.22	-81.2	790
G4MW039	35-45	20.67	5.2	483	0.20	-66.9	791
G4MW040	35-45	21.05	4.86	428	0.23	-24.5	685
G4MW041	35-45	19.78	4.8	162	0.21	-85.7	7.90
G4MW042	35-45	20.44	7.26	582	0.17	-130	2.11
G4MW043	14-24	17.07	7.26	506	0.53	-142	0.97
G4MW044	4.5-14.5	19.50	5.43	203	0.73	-30	6.13
G4MW045	20-30	19.35	6.98	514	0.77	-137	7.98
G4MW046	9-19	20.03	5.11	212	0.45	-9	3.18
G4MW047	25-35	22.73	5.62	451	0.79	-70	784

Notes:

bgs	Below ground surface
^{o}C	Degrees Celcius
SU	Standard Units
µmhos/cm	Micromhos per centimeter
mg/L	Milligrams per Liter
mV	Millivolt
NTU	Nephelometric Turbidity Units
NR	Not recorded

Table 4-14
January 2011 Groundwater Analytical Data
SWMU 39
Fort Stewart, Georgia

				Location ID	G4MW010	G4MW011	G4MW013	G4MW014	G4MW016	G4MW016 DUP	G4MW017	G4MW018	G4MW019	G4MW020	G4MW022	G4MW023	G4MW024	G4MW025	G4MW026	G4MW027	G4MW028	G4MW029	G4MW030	G4MW031
				Sample Date	1/27/2011	1/27/2011	1/27/2011	1/25/2011	1/26/2011	1/26/2011	1/26/2011	1/26/2011	1/27/2011	1/27/2011	1/25/2011	1/27/2011	1/27/2011	1/27/2011	1/25/2011	1/27/2011	1/25/2011	1/27/2011	1/26/2011	1/25/2011
Chemical Name	CAS No	Unit	Tap Water RSL[1]	MCL[2]																				
VOCs - USEPA Method SW8260 (µg/L)																								
1,1,1-Trichloroethane	71-55-6	ug/L	7500	200	< 1 U	< 1 U	< 1 U	< 1 UJ	< 1 U	< 1 U	< 1 U	< 1 U	< 1 U	< 1 U	< 1 U	< 1 U	< 1 U	< 1 U	< 1 U	< 1 U	< 1 U	< 1 U	< 1 U	< 1 UJ
1,1,2,2-Tetrachloroethane	79-34-5	ug/L	0.066		< 1 U	< 1 U	< 1 U	< 1 U	< 1 U	< 1 U	< 1 U	< 1 U	< 1 U	< 1 U	< 1 U	< 1 U	< 1 U	< 1 U	< 1 U	< 1 U	< 1 U	< 1 U	< 1 U	< 1 U
1,1,2-Trichloroethane	79-00-5	ug/L	0.24	5	< 1 U	< 1 U	< 1 U	< 1 U	< 1 U	< 1 U	< 1 U	< 1 U	< 1 U	< 1 U	< 1 U	< 1 U	< 1 U	< 1 U	< 1 U	< 1 U	< 1 U	< 1 U	< 1 U	< 1 U
1,1-Dichloroethane	75-34-3	ug/L	2.4		< 1 U	**0.17 J**	< 1 U	< 1 UJ	< 1 U	< 1 U	< 1 U	**0.13 J**	< 1 U	< 1 U	< 1 U	< 1 U	< 1 U	< 1 U	< 1 U	< 1 U	< 1 U	< 1 U	< 1 U	< 1 UJ
1,1-Dichloroethene	75-35-4	ug/L	260	7	< 1 U	**0.49 J**	< 1 U	< 1 UJ	**0.5 J**	**0.52 J**	**0.28 J**	**0.43 J**	**0.59 J**	< 1 U	< 1 U	< 1 U	< 1 U	< 1 U	< 1 U	< 1 U	< 1 U	< 1 U	< 1 U	< 1 UJ
1,2,4-Trichlorobenzene	120-82-1	ug/L	0.99	70	< 1 U	< 1 U	< 1 U	< 1 U	< 1 U	< 1 U	< 1 U	< 1 U	< 1 U	< 1 U	< 1 U	< 1 U	< 1 U	< 1 U	< 1 U	< 1 U	< 1 U	< 1 U	< 1 U	< 1 U
1,2-Dichlorobenzene	95-50-1	ug/L	280	600	< 1 U	< 1 U	< 1 U	< 1 U	< 1 U	< 1 U	< 1 U	< 1 U	< 1 U	< 1 U	< 1 U	< 1 U	< 1 U	< 1 U	< 1 U	< 1 U	< 1 U	< 1 U	< 1 U	< 1 U
1,2-Dichloroethane	107-06-2	ug/L	0.15	5	< 1 U	< 1 U	< 1 U	< 1 U	< 1 U	< 1 U	< 1 U	< 1 U	< 1 U	< 1 U	< 1 U	< 1 U	< 1 U	< 1 U	< 1 U	< 1 U	< 1 U	< 1 U	< 1 U	< 1 U
1,2-Dichloropropane	78-87-5	ug/L	0.38	5	< 1 U	< 1 U	< 1 U	< 1 U	< 1 U	< 1 U	< 1 U	< 1 U	< 1 U	< 1 U	< 1 U	< 1 U	< 1 U	< 1 U	< 1 U	< 1 U	< 1 U	< 1 U	< 1 U	< 1 U
1,3-Dichlorobenzene	541-73-1	ug/L			< 1 U	< 1 U	< 1 U	< 1 U	< 1 U	< 1 U	< 1 U	< 1 U	< 1 U	< 1 U	< 1 U	< 1 U	< 1 U	< 1 U	< 1 U	< 1 U	< 1 U	< 1 U	< 1 U	< 1 U
1,4-Dichlorobenzene	106-46-7	ug/L	0.42	75	< 1 U	< 1 U	< 1 U	< 1 UJ	< 1 U	< 1 U	< 1 U	< 1 U	< 1 U	< 1 U	< 1 U	< 1 U	< 1 U	< 1 U	< 1 U	< 1 U	< 1 U	< 1 U	< 1 U	< 1 UJ
2-Butanone	78-93-3	ug/L	4900		< 10 U	< 10 U	< 10 U	< 10 U	< 10 U	< 10 U	< 10 U	< 10 U	**25**	< 10 U	< 10 U	< 10 U	< 10 U	< 10 U	< 10 U	< 10 U	< 10 U	< 10 U	< 10 U	< 10 U
2-Hexanone	591-78-6	ug/L	34		< 10 U	< 10 U	< 10 U	< 10 U	< 10 U	< 10 U	< 10 U	< 10 U	< 10 U	< 10 U	< 10 U	< 10 U	< 10 U	< 10 U	< 10 U	< 10 U	< 10 U	< 10 U	< 10 U	< 10 U
4-Methyl-2-pentanone	108-10-1	ug/L	1000		< 10 U	< 10 U	< 10 U	< 10 U	< 10 U	< 10 U	< 10 U	< 10 U	< 10 U	< 10 U	< 10 U	< 10 U	< 10 U	< 10 U	< 10 U	< 10 U	< 10 U	< 10 U	< 10 U	< 10 U
Acetone	67-64-1	ug/L	12000		< 20 U	< 20 U	< 20 U	< 20 U	< 20 U	< 20 U	< 20 U	< 20 U	**10 J**	< 20 U	< 20 U	< 20 U	< 20 U	< 20 U	< 20 U	< 20 U	< 20 U	< 20 U	< 20 U	< 20 U
Benzene	71-43-2	ug/L	0.39	5	**0.17 J**	< 1 U	< 1 U	< 1 UJ	**0.15 J**	**0.16 J**	**0.17 J**	< 1 U	< 1 U	**0.2 J**	< 1 U	< 1 U	< 1 U	< 1 U	< 1 U	< 1 U	< 1 U	< 1 U	< 1 U	< 1 UJ
Bromodichloromethane	75-27-4	ug/L	0.12	80	< 1 U	< 1 U	< 1 U	< 1 UJ	< 1 U	< 1 U	< 1 U	< 1 U	< 1 U	< 1 U	< 1 U	< 1 U	< 1 U	< 1 U	< 1 U	< 1 U	< 1 U	< 1 U	< 1 U	< 1 UJ
Bromoform	75-25-2	ug/L	7.9	80	< 1 U	< 1 U	< 1 U	< 1 UJ	< 1 U	< 1 U	< 1 U	< 1 U	< 1 U	< 1 U	< 1 U	< 1 U	< 1 U	< 1 U	< 1 U	< 1 U	< 1 U	< 1 U	< 1 U	< 1 UJ
Bromomethane	74-83-9	ug/L	7		< 2 U	< 2 U	< 2 U	< 2 U	< 2 U	< 2 U	< 2 U	< 2 U	< 2 U	< 2 U	< 2 U	< 2 U	< 2 U	< 2 U	< 2 U	< 2 U	< 2 U	< 2 U	< 2 U	< 2 U
Carbon disulfide	75-15-0	ug/L	720		< 1 U	< 1 U	< 1 U	< 1 U	< 1 U	< 1 U	< 1 U	< 1 U	< 1 U	< 1 U	< 1 U	< 1 U	< 1 U	< 1 U	< 1 U	< 1 U	< 1 U	< 1 U	< 1 U	< 1 U
Carbon tetrachloride	56-23-5	ug/L	0.39	5	< 1 U	< 1 U	< 1 U	< 1 UJ	< 1 U	< 1 U	< 1 U	< 1 U	< 1 U	< 1 U	< 1 U	< 1 U	< 1 U	< 1 U	< 1 U	< 1 U	< 1 U	< 1 U	< 1 U	< 1 UJ
Chlorobenzene	108-90-7	ug/L	72	100	< 2 U	< 2 U	< 2 U	< 2 U	< 2 U	< 2 U	< 2 U	< 2 U	< 2 U	< 2 U	< 2 U	< 2 U	< 2 U	< 2 U	< 2 U	< 2 U	< 2 U	< 2 U	< 2 U	< 2 U
Chloroethane	75-00-3	ug/L	21000		< 2 U	< 2 U	< 2 U	< 2 U	< 2 U	< 2 U	< 2 U	< 2 U	< 2 U	< 2 U	< 2 U	< 2 U	< 2 U	< 2 U	< 2 U	< 2 U	< 2 U	< 2 U	< 2 U	< 2 U
Chloroform	67-66-3	ug/L	0.19	80	< 1 U	< 1 U	< 1 U	< 1 UJ	< 1 U	< 1 U	< 1 U	< 1 U	< 1 U	< 1 U	< 1 U	< 1 U	< 1 U	< 1 U	< 1 U	< 1 U	< 1 U	< 1 U	< 1 U	< 1 UJ
Chloromethane	74-87-3	ug/L	190		< 1 U	< 1 U	< 1 U	< 1 U	< 1 U	< 1 U	< 1 U	< 1 U	< 1 U	< 1 U	< 1 U	< 1 U	< 1 U	< 1 U	< 1 U	< 1 U	< 1 U	< 1 U	< 1 U	< 1 U
cis-1,2-Dichloroethene	156-59-2	ug/L	28	70	**1.8**	**14**	**6.4**	< 1 U	**13**	**13**	**7.1**	**13**	**16**	**2.8**	**1.9**	**0.93 J**	**11**	**8.3**	< 1 U	**0.33 J**	< 1 U	**3.7**	**0.32 J**	< 1 U
cis-1,3-Dichloropropene	10061-01-5	ug/L			< 1 U	< 1 U	< 1 U	< 1 U	< 1 U	< 1 U	< 1 U	< 1 U	< 1 U	< 1 U	< 1 U	< 1 U	< 1 U	< 1 U	< 1 U	< 1 U	< 1 U	< 1 U	< 1 U	< 1 U
Dibromochloromethane	124-48-1	ug/L	0.15	80	< 1 U	< 1 U	< 1 U	< 1 UJ	< 1 U	< 1 U	< 1 U	< 1 U	< 1 U	< 1 U	< 1 U	< 1 U	< 1 U	< 1 U	< 1 U	< 1 U	< 1 U	< 1 U	< 1 U	< 1 UJ
Ethylbenzene	100-41-4	ug/L	1.3	700	< 1 U	< 1 U	< 1 U	< 1 UJ	< 1 U	< 1 U	< 1 U	< 1 U	< 1 U	< 1 U	< 1 U	< 1 U	< 1 U	< 1 U	< 1 U	< 1 U	< 1 U	< 1 U	< 1 U	< 1 UJ
Methylene chloride	75-09-2	ug/L	9.9	5	< 1 U	< 1 U	< 1 U	< 1 U	< 1 U	< 1 U	< 1 U	< 1 U	< 1 U	< 1 U	< 1 U	< 1 U	< 1 U	< 1 U	< 1 U	< 1 U	< 1 U	< 1 U	< 1 U	< 1 U
Styrene	100-42-5	ug/L	1100	100	< 1 U	< 1 U	< 1 U	< 1 UJ	< 1 U	< 1 U	< 1 U	< 1 U	< 1 U	< 1 U	< 1 U	< 1 U	< 1 U	< 1 U	< 1 U	< 1 U	< 1 U	< 1 U	< 1 U	< 1 UJ
tert-Butyl methyl ether	1634-04-4	ug/L	12		< 1 U	< 1 U	< 1 U	< 1 U	< 1 U	< 1 U	< 1 U	< 1 U	< 1 U	< 1 U	< 1 U	< 1 U	< 1 U	< 1 U	< 1 U	< 1 U	< 1 U	< 1 U	< 1 U	< 1 U
Tetrachloroethene	127-18-4	ug/L	9.7	5	< 1 U	< 1 U	< 1 U	< 1 U	**1.9**	**1.8**	< 1 U	< 1 U	< 1 U	< 1 U	< 1 U	< 1 U	< 1 U	< 1 U	< 1 U	< 1 U	< 1 U	< 1 U	< 1 U	< 1 U
Toluene	108-88-3	ug/L	860	1000	< 1 U	< 1 U	< 1 U	< 1 U	< 1 U	< 1 U	< 1 U	< 1 U	< 1 U	< 1 U	< 1 U	< 1 U	< 1 U	< 1 U	< 1 U	< 1 U	< 1 U	< 1 U	< 1 U	< 1 U
trans-1,2-Dichloroethene	156-60-5	ug/L	86	100	**1.1**	**4.3**	**1.3**	< 1 UJ	**3.9**	**4**	**2.1**	**3.4**	**5.4**	**0.51 J**	**0.54 J**	**0.31 J**	**3.3**	**2.4**	< 1 U	< 1 U	< 1 U	**1.1**	< 1 U	< 1 UJ
trans-1,3-Dichloropropene	10061-02-6	ug/L			< 1 U	< 1 U	< 1 U	< 1 U	< 1 U	< 1 U	< 1 U	< 1 U	< 1 U	< 1 U	< 1 U	< 1 U	< 1 U	< 1 U	< 1 U	< 1 U	< 1 U	< 1 U	< 1 U	< 1 U
Trichloroethene	79-01-6	ug/L	0.44	5	**0.32 J**	**6.2**	**3.3**	< 1 U	**15**	**15**	**15**	**6.7**	**6.3**	**0.22 J**	**3.1**	**1.4**	**2.8**	**5.8**	< 1 U	**6.4**	< 1 U	**2.9**	< 1 U	< 1 U
Vinyl chloride	75-01-4	ug/L	0.015	2	**2.5**	< 1 U	< 1 U	< 1 U	< 1 U	< 1 U	< 1 U	< 1 U	< 1 U	< 1 U	< 1 U	< 1 U	< 1 U	< 1 U	< 1 U	< 1 U	< 1 U	< 1 U	< 1 U	< 1 U
Xylenes (total)	1330-20-7	ug/L	190	10000	< 1 U	< 1 U	< 1 U	< 1 UJ	< 1 U	< 1 U	< 1 U	< 1 U	< 1 U	< 1 U	< 1 U	< 1 U	< 1 U	< 1 U	< 1 U	< 1 U	< 1 U	< 1 U	< 1 U	< 1 UJ
SVOCs - U.S. EPA Method 8270 (µg/L)																								
2,4,5-Trichlorophenol	95-95-4	ug/L	890		< 1 U	< 1 U	< 1 U	< 1 U	< 1 U	< 1 U	< 1 U	< 1 U	< 1 U	< 1 U	< 1 U	< 1 U	< 1 U	< 1 U	< 1 U	< 1 U	< 1 U	< 1 U	< 1 U	< 1 U
2,4,6-Trichlorophenol	88-06-2	ug/L	3.5		< 1 U	< 1 U	< 1 U	< 1 U	< 1 U	< 1 U	< 1 U	< 1 U	< 1 U	< 1 U	< 1 U	< 1 U	< 1 U	< 1 U	< 1 U	< 1 U	< 1 U	< 1 U	< 1 U	< 1 U
2,4-Dichlorophenol	120-83-2	ug/L	35		< 1 U	< 1 U	< 1 U	< 1 U	< 1 U	< 1 U	< 1 U	< 1 U	< 1 U	< 1 U	< 1 U	< 1 U	< 1 U	< 1 U	< 1 U	< 1 U	< 1 U	< 1 U	< 1 U	< 1 U
2,4-Dimethylphenol	105-67-9	ug/L	270		< 1 U	< 1 U	< 1 U	< 1 U	< 1 U	< 1 U	< 1 U	< 1 U	< 1 U	< 1 U	< 1 U	< 1 U	< 1 U	< 1 U	< 1 U	< 1 U	< 1 U	< 1 U	< 1 U	< 1 U
2,4-Dinitrophenol	51-28-5	ug/L	30		< 5.1 U	< 5.1 U	< 5.1 U	< 5 U	< 5 U	< 5 U	< 5.1 U	< 5.1 U	< 5 U	< 5.1 U	< 5 U	< 5.1 U	< 5.1 U	< 5.1 U	< 5 U	< 5 U	< 5 U	< 5 U	< 5.1 U	< 5 U
2,4-Dinitrotoluene	121-14-2	ug/L	0.2		< 2 U	< 2 U	< 2 U	< 2 U	< 2 U	< 2 U	< 2 U	< 2 U	< 2 U	< 2 U	< 2 U	< 2 U	< 2 U	< 2 U	< 2 U	< 2 U	< 2 U	< 2 U	< 2 U	< 2 U
2,6-Dinitrotoluene	606-20-2	ug/L	15		< 2 U	< 2 U	< 2 U	< 2 U	< 2 U	< 2 U	< 2 U	< 2 U	< 2 U	< 2 U	< 2 U	< 2 U	< 2 U	< 2 U	< 2 U	< 2 U	< 2 U	< 2 U	< 2 U	< 2 U
2-Chloronaphthalene	91-58-7	ug/L	550		< 1 U	< 1 U	< 1 U	< 1 U	< 1 U	< 1 U	< 1 U	< 1 U	< 1 U	< 1 U	< 1 U	< 1 UJ	< 1 U	< 1 U	< 1 U	< 1 U	< 1 U	< 1 U	< 1 U	< 1 U
2-Chlorophenol	95-57-8	ug/L	71		< 1 U	< 1 U	< 1 U	< 1 U	< 1 U	< 1 U	< 1 U	< 1 U	< 1 U	< 1 U	< 1 U	< 1 U	< 1 U	< 1 U	< 1 U	< 1 U	< 1 U	< 1 U	< 1 U	< 1 U
2-Methyl-4,6-dinitrophenol	534-52-1	ug/L	1.2		< 5.1 U	< 5.1 U	< 5.1 U	< 5 U	< 5 U	< 5 U	< 5.1 U	< 5.1 U	< 5 U	< 5.1 U	< 5 U	< 5.1 U	< 5.1 U	< 5.1 U	< 5 U	< 5 U	< 5 U	< 5 U	< 5.1 U	< 5 U
2-Methylnaphthalene	91-57-6	ug/L	27		< 1 U	< 1 U	< 1 UJ	< 1 U	< 1 U	< 1 U	< 1 U	< 1 U	< 1 U	< 1 U	< 1 U	< 1 U	< 1 U	< 1 U	< 1 U	< 1 U	< 1 U	< 1 U	< 1 U	< 1 U
2-Methylphenol	95-48-7	ug/L	720		< 1 U	< 1 U	< 1 U	< 1 U	< 1 U	< 1 U	< 1 U	< 1 U	< 1 U	< 1 U	< 1 U	< 1 U	< 1 U	< 1 U	< 1 U	< 1 U	< 1 U	< 1 U	< 1 U	< 1 U
2-Nitrobenzenamine	88-74-4	ug/L	150		< 2 U	< 2 U	< 2 U	< 2 U	< 2 U	< 2 U	< 2 U	< 2 U	< 2 U	< 2 U	< 2 U	< 2 U	< 2 U	< 2 U	< 2 U	< 2 U	< 2 U	< 2 U	< 2 U	< 2 U
2-Nitrophenol	88-75-5	ug/L			< 2 U	< 2 U	< 2 U	< 2 U	< 2 U	< 2 U	< 2 U	< 2 U	< 2 U	< 2 U	< 2 U	< 2 U	< 2 U	< 2 U	< 2 U	< 2 U	< 2 U	< 2 U	< 2 U	< 2 U
3,3'-Dichlorobenzidine	91-94-1	ug/L	0.11		< 5.1 U	< 5.1 U	< 5.1 U	< 5 U	< 5 U	< 5 U	< 5.1 U	< 5.1 U	< 5 U	< 5.1 U	< 5 U	< 5.1 U	< 5.1 U	< 5.1 U	< 5 U	< 5 U	< 5 U	< 5 U	< 5.1 U	< 5 U
3-Nitrobenzenamine	99-09-2	ug/L			< 2 U	< 2 U	< 2 R	< 2 U	< 2 U	< 2 U	< 2 U	< 2 U	< 2 U	< 2 U	< 2 U	< 2 U	< 2 U	< 2 U	< 2 U	< 2 U	< 2 U	< 2 U	< 2 U	< 2 U
4-Bromophenyl phenyl ether	101-55-3	ug/L			< 1 U	< 1 U	< 1 UJ	< 1 U	< 1 U	< 1 U	< 1 U	< 1 U	< 1 U	< 1 U	< 1 U	< 1 U	< 1 U	< 1 U	< 1 U	< 1 U	< 1 U	< 1 U	< 1 U	< 1 U
4-Chloro-3-methylphenol	59-50-7	ug/L	1100		< 1 U	< 1 U	< 1 U	< 1 U	< 1 U	< 1 U	< 1 U	< 1 U	< 1 U	< 1 U	< 1 U	< 1 U	< 1 U	< 1 U	< 1 U	< 1 U	< 1 U	< 1 U	< 1 U	< 1 U
4-Chlorobenzenamine	106-47-8	ug/L	0.32		< 1 U	< 1 U	< 1 R	< 1 U	< 1 U	< 1 U	< 1 U	< 1 U	< 1 U	< 1 U	< 1 U	< 1 R	< 1 U	< 1 U	< 1 U	< 1 U	< 1 U	< 1 U	< 1 U	< 1 U
4-Chlorophenyl phenyl ether	7005-72-3	ug/L			< 1 U	< 1 U	< 1 U	< 1 U	< 1 U	< 1 U	< 1 U	< 1 U	< 1 U	< 1 U	< 1 U	< 1 U	< 1 U	< 1 U	< 1 U	< 1 U	< 1 U	< 1 U	< 1 U	< 1 U
4-Methylphenol	106-44-5	ug/L	1400		< 2 U	< 2 U	< 2 U	< 2 U	< 2 U	< 2 U	< 2 U	< 2 U	< 2 U	< 2 U	< 2 U	< 2 U	< 2 U	< 2 U	< 2 U	< 2 U	< 2 U	< 2 U	< 2 U	< 2 U
4-Nitrobenzenamine	100-01-6	ug/L	3.3		< 2 U	< 2 U	< 2 R	< 2 U	< 2 U	< 2 U	< 2 U	< 2 U	< 2 U	< 2 U	< 2 U	< 2 U	< 2 U	< 2 U	< 2 U	< 2 U	< 2 U	< 2 U	< 2 U	< 2 U
4-Nitrophenol	100-02-7	ug/L			< 5.1 U	< 5.1 U	< 5.1 U	< 5 U	< 5 U	< 5 U	< 5.1 U	< 5.1 U	< 5 U	< 5.1 U	< 5 U	< 5.1 U	< 5.1 U	< 5.1 U	< 5 U	< 5 U	< 5 U	< 5 U	< 5.1 U	< 5 U
Acenaphthene	83-32-9	ug/L	400		< 1 U	< 1 U	< 1 U	< 1 U	< 1 U	< 1 U	< 1 U	< 1 U	< 1 U	< 1 U	< 1 U	< 1 U	< 1 U	< 1 U	< 1 U	< 1 U	< 1 U	< 1 U	< 1 U	< 1 U
Acenaphthylene	208-96-8	ug/L			< 1 U	< 1 U	< 1 U	< 1 U	< 1 U	< 1 U	< 1 U	< 1 U	< 1 U	< 1 U	< 1 U	< 1 U	< 1 U	< 1 U	< 1 U	< 1 U	< 1 U	< 1 U	< 1 U	< 1 U
Anthracene	120-12-7	ug/L	1300		< 1 U	< 1 U	< 1 UJ	< 1 U	< 1 U	< 1 U	< 1 U	< 1 U	< 1 U	< 1 U	< 1 U	< 1 U	< 1 U	< 1 U	< 1 U	< 1 U	< 1 U	< 1 U	< 1 U	< 1 U
Benz(a)anthracene	56-55-3	ug/L	0.029		< 1 U	< 1 U	< 1 UJ	< 1 U	< 1 U	< 1 U	< 1 U	< 1 U	< 1 U	< 1 U	< 1 U	< 1 UJ	< 1 U	< 1 U	< 1 U	< 1 U	< 1 U	< 1 U	< 1 U	< 1 U

Footnotes appear on last page.

Table 4-14
January 2011 Groundwater Analytical Data
SWMU 39
Fort Stewart, Georgia

			Location ID		G4MW010	G4MW011	G4MW013	G4MW014	G4MW016	G4MW016 DUP	G4MW017	G4MW018	G4MW019	G4MW020	G4MW022	G4MW023	G4MW024	G4MW025	G4MW026	G4MW027	G4MW028	G4MW029	G4MW030	G4MW031
			Sample Date		1/27/2011	1/27/2011	1/27/2011	1/25/2011	1/26/2011	1/26/2011	1/26/2011	1/26/2011	1/27/2011	1/27/2011	1/25/2011	1/27/2011	1/27/2011	1/27/2011	1/25/2011	1/27/2011	1/25/2011	1/27/2011	1/26/2011	1/25/2011
Chemical Name	CAS No	Unit	Tap Water RSL[1]	MCL[2]																				
SVOCs continued - U.S. EPA Method 8270 (µg/L)																								
Benzo(a)pyrene	50-32-8	ug/L	0.0029	0.2	< 1 UJ	< 1 UJ	< 1 U	< 1 U	< 1 U	< 1 U	< 1 UJ	< 1 UJ	< 1 U	< 1 UJ	< 1 U	< 1 UJ	< 1 UJ	< 1 UJ	< 1 U	< 1 UJ	< 1 U	< 1 U	< 1 UJ	< 1 U
Benzo(b)fluoranthene	205-99-2	ug/L	0.029		< 1 U	< 1 U	< 1 U	< 1 U	< 1 U	< 1 U	< 1 U	< 1 U	< 1 U	< 1 U	< 1 U	< 1 U	< 1 U	< 1 U	< 1 U	< 1 U	< 1 U	< 1 U	< 1 U	< 1 U
Benzo(ghi)perylene	191-24-2	ug/L			< 1 U	< 1 U	< 1 UJ	< 1 U	< 1 U	< 1 U	< 1 U	< 1 U	< 1 U	< 1 U	< 1 U	< 1 R	< 1 U	< 1 U	< 1 U	< 1 U	< 1 U	< 1 U	< 1 U	< 1 U
Benzo(k)fluoranthene	207-08-9	ug/L	0.29		< 1 U	< 1 U	< 1 U	< 1 U	< 1 U	< 1 U	< 1 U	< 1 U	< 1 U	< 1 U	< 1 U	< 1 U	< 1 U	< 1 U	< 1 U	< 1 U	< 1 U	< 1 U	< 1 U	< 1 U
Bis(2-chloroethoxy)methane	111-91-1	ug/L	46		< 1 U	< 1 U	< 1 UJ	< 1 U	< 1 U	< 1 U	< 1 U	< 1 U	< 1 U	< 1 U	< 1 U	< 1 U	< 1 U	< 1 U	< 1 U	< 1 U	< 1 U	< 1 U	< 1 U	< 1 U
Bis(2-chloroisopropyl) ether	108-60-1	ug/L	0.31		< 1 U	< 1 U	< 1 U	< 1 U	< 1 U	< 1 U	< 1 U	< 1 U	< 1 U	< 1 U	< 1 U	< 1 U	< 1 U	< 1 U	< 1 U	< 1 U	< 1 U	< 1 U	< 1 U	< 1 U
Bis(2-ethylhexyl)phthalate	117-81-7	ug/L	4.8	6	< 5.1 U	< 5.1 U	< 5.1 U	< 5 U	< 5 U	< 5 U	< 5.1 U	< 5.1 U	< 5 U	< 5.1 U	< 5 U	< 5.1 R	< 5.1 U	< 5.1 U	< 5 U	< 5 U	< 5 U	< 5 U	< 5.1 U	< 5 U
Butyl benzyl phthalate	85-68-7	ug/L	14		< 5.1 U	< 5.1 U	< 5.1 UJ	< 5 U	< 5 U	< 5 U	< 5.1 U	< 5.1 U	< 5 U	< 5.1 U	< 5 U	< 5.1 UJ	< 5.1 U	< 5.1 U	< 5 U	< 5 U	< 5 U	< 5 U	< 5.1 U	< 5 U
Carbazole	86-74-8	ug/L			< 1 U	< 1 U	< 1 UJ	< 1 U	< 1 U	< 1 U	< 1 U	< 1 U	< 1 U	< 1 U	< 1 U	< 1 U	< 1 U	< 1 U	< 1 U	< 1 U	< 1 U	< 1 U	< 1 U	< 1 U
Chrysene	218-01-9	ug/L	2.9		< 1 U	< 1 U	< 1 UJ	< 1 U	< 1 U	< 1 U	< 1 U	< 1 U	< 1 U	< 1 U	< 1 U	< 1 UJ	< 1 U	< 1 U	< 1 U	< 1 U	< 1 U	< 1 U	< 1 U	< 1 U
Dibenz(a,h)anthracene	53-70-3	ug/L	0.0029		< 1 U	< 1 U	< 1 UJ	< 1 U	< 1 U	< 1 U	< 1 U	< 1 U	< 1 U	< 1 U	< 1 U	< 1 R	< 1 U	< 1 U	< 1 U	< 1 U	< 1 U	< 1 U	< 1 U	< 1 U
Dibenzofuran	132-64-9	ug/L	5.8		< 1 U	< 1 U	< 1 U	< 1 U	< 1 U	< 1 U	< 1 U	< 1 U	< 1 U	< 1 U	< 1 U	< 1 U	< 1 U	< 1 U	< 1 U	< 1 U	< 1 U	< 1 U	< 1 U	< 1 U
Diethyl phthalate	84-66-2	ug/L	11000		< 5.1 U	< 5.1 U	< 5.1 U	< 5 U	< 5 U	< 5 U	< 5.1 U	< 5.1 U	< 5 U	< 5.1 U	< 5 U	< 5.1 U	< 5.1 U	< 5.1 U	< 5 U	< 5 U	< 5 U	< 5 U	< 5.1 U	< 5 U
Dimethyl phthalate	131-11-3	ug/L			< 5.1 U	< 5.1 U	< 5.1 U	< 5 U	< 5 U	< 5 U	< 5.1 U	< 5.1 U	< 5 U	< 5.1 U	< 5 U	< 5.1 U	< 5.1 U	< 5.1 U	< 5 U	< 5 U	< 5 U	< 5 U	< 5.1 U	< 5 U
Di-n-butyl phthalate	84-74-2	ug/L	670		< 5.1 U	< 5.1 U	< 5.1 U	< 5 U	< 5 U	< 5 U	< 5.1 U	< 5.1 U	< 5 U	< 5.1 U	< 5 U	< 5.1 U	< 5.1 U	< 5.1 U	< 5 U	< 5 U	< 5 U	< 5 U	< 5.1 U	< 5 U
Di-n-octylphthalate	117-84-0	ug/L	190		< 5.1 U	< 5.1 U	< 5.1 UJ	< 5 U	< 5 U	< 5 U	< 5.1 U	< 5.1 U	< 5 U	< 5.1 U	< 5 U	< 5.1 R	< 5.1 U	< 5.1 U	< 5 U	< 5 U	< 5 U	< 5 U	< 5.1 U	< 5 U
Fluoranthene	206-44-0	ug/L	630		< 1 U	< 1 U	< 1 UJ	< 1 U	< 1 U	< 1 U	< 1 U	< 1 U	< 1 U	< 1 U	< 1 U	< 1 U	< 1 U	< 1 U	< 1 U	< 1 U	< 1 U	< 1 U	< 1 U	< 1 U
Fluorene	86-73-7	ug/L	220		< 1 U	< 1 U	< 1 U	< 1 U	< 1 U	< 1 U	< 1 U	< 1 U	< 1 U	< 1 U	< 1 U	< 1 U	< 1 U	< 1 U	< 1 U	< 1 U	< 1 U	< 1 U	< 1 U	< 1 U
Hexachlorobenzene	118-74-1	ug/L	0.042	1	< 1 U	< 1 U	< 1 UJ	< 1 U	< 1 U	< 1 U	< 1 U	< 1 U	< 1 U	< 1 U	< 1 U	< 1 U	< 1 U	< 1 U	< 1 U	< 1 U	< 1 U	< 1 U	< 1 U	< 1 U
Hexachlorobutadiene	87-68-3	ug/L	0.26		< 1 U	< 1 U	< 1 UJ	< 1 U	< 1 U	< 1 U	< 1 U	< 1 U	< 1 U	< 1 U	< 1 U	< 1 U	< 1 U	< 1 U	< 1 U	< 1 U	< 1 U	< 1 U	< 1 U	< 1 U
Hexachlorocyclopentadiene	77-47-4	ug/L	22	50	< 5.1 U	< 5.1 U	< 5.1 U	< 5 U	< 5 U	< 5 U	< 5.1 U	< 5.1 U	< 5 U	< 5.1 U	< 5 U	< 5.1 U	< 5.1 U	< 5.1 U	< 5 U	< 5 U	< 5 U	< 5 U	< 5.1 U	< 5 U
Hexachloroethane	67-72-1	ug/L	0.79		< 1 U	< 1 U	< 1 U	< 1 U	< 1 U	< 1 U	< 1 U	< 1 U	< 1 U	< 1 U	< 1 U	< 1 U	< 1 U	< 1 U	< 1 U	< 1 U	< 1 U	< 1 U	< 1 U	< 1 U
Indeno(1,2,3-cd)pyrene	193-39-5	ug/L	0.029		< 1 U	< 1 U	< 1 UJ	< 1 U	< 1 U	< 1 U	< 1 U	< 1 U	< 1 U	< 1 U	< 1 U	< 1 R	< 1 U	< 1 U	< 1 U	< 1 U	< 1 U	< 1 U	< 1 U	< 1 U
Isophorone	78-59-1	ug/L	67		< 1 U	< 1 U	< 1 U	< 1 U	< 1 U	< 1 U	< 1 U	< 1 U	< 1 U	< 1 U	< 1 U	< 1 U	< 1 U	< 1 U	< 1 U	< 1 U	< 1 U	< 1 U	< 1 U	< 1 U
Naphthalene	91-20-3	ug/L	0.14		< 1 U	< 1 U	< 1 UJ	< 1 U	< 1 U	< 1 U	< 1 U	< 1 U	< 1 U	< 1 U	< 1 U	< 1 U	< 1 U	< 1 U	< 1 U	< 1 U	< 1 U	< 1 U	< 1 U	< 1 U
Nitrobenzene	98-95-3	ug/L	0.12		< 1 U	< 1 U	< 1 U	< 1 U	< 1 U	< 1 U	< 1 U	< 1 U	< 1 U	< 1 U	< 1 U	< 1 U	< 1 U	< 1 U	< 1 U	< 1 U	< 1 U	< 1 U	< 1 U	< 1 U
N-Nitroso-di-n-propylamine	621-64-7	ug/L	0.0093		< 1 U	< 1 U	< 1 U	< 1 U	< 1 U	< 1 U	< 1 U	< 1 U	< 1 U	< 1 U	< 1 U	< 1 U	< 1 U	< 1 U	< 1 U	< 1 U	< 1 U	< 1 U	< 1 U	< 1 U
N-Nitrosodiphenylamine	86-30-6	ug/L	10		< 1 U	< 1 U	< 1 UJ	< 1 U	< 1 U	< 1 U	< 1 U	< 1 U	< 1 U	< 1 U	< 1 U	< 1 U	< 1 U	< 1 U	< 1 U	< 1 U	< 1 U	< 1 U	< 1 U	< 1 U
Pentachlorophenol	87-86-5	ug/L	0.035	1	< 5.1 U	< 5.1 U	< 5.1 U	< 5 U	< 5 U	< 5 U	< 5.1 U	< 5.1 U	< 5 U	< 5.1 U	< 5 U	< 5.1 U	< 5.1 U	< 5.1 U	< 5 U	< 5 U	< 5 U	< 5 U	< 5.1 U	< 5 U
Phenanthrene	85-01-8	ug/L			< 1 U	< 1 U	< 1 U	< 1 U	< 1 U	< 1 U	< 1 U	< 1 U	< 1 U	< 1 U	< 1 U	< 1 U	< 1 U	< 1 U	< 1 U	< 1 U	< 1 U	< 1 U	< 1 U	< 1 U
Phenol	108-95-2	ug/L	4500		< 1 U	< 1 U	< 1 U	< 1 U	< 1 U	< 1 U	< 1 U	< 1 U	< 1 U	< 1 U	< 1 U	< 1 U	< 1 U	< 1 U	< 1 U	< 1 U	< 1 U	< 1 U	< 1 U	< 1 U
Pyrene	129-00-0	ug/L	87		< 1 U	< 1 U	< 1 UJ	< 1 U	< 1 U	< 1 U	< 1 U	< 1 U	< 1 U	< 1 U	< 1 U	< 1 UJ	< 1 U	< 1 U	< 1 U	< 1 U	< 1 U	< 1 U	< 1 U	< 1 U
Dissolved Metals (mg/L)																								
Arsenic	7440-38-2	mg/L	0.000045	0.01	< 0.01 U	< 0.01 U	**0.006 J**	< 0.01 U	< 0.01 U	< 0.01 U	< 0.01 U	< 0.01 U	**0.0078 J**	**0.0099 J**	< 0.01 U	0.0041 UB	**0.0056 J**	**0.004 J**	< 0.01 U	< 0.01 U	< 0.01 U	< 0.01 U	< 0.01 U	< 0.01 U
Barium	7440-39-3	mg/L	2.9	2	**0.019 J**	**0.036**	**0.023 J**	**0.016 J**	**0.034**	**0.033**	**0.086**	**0.039**	**0.057**	**0.041**	**0.27**	**0.018 J**	**0.046**	**0.058**	**0.023 J**	**0.095**	**0.088**	< 0.025 U	**0.074**	**0.0084 J**
Cadmium	7440-43-9	mg/L	0.0069	0.005	< 0.002 U	< 0.002 U	**0.00068 J**	< 0.002 U	< 0.002 U	< 0.002 U	< 0.002 U	< 0.002 U	< 0.002 U	< 0.002 U	< 0.002 U	< 0.002 U	< 0.002 U	< 0.002 U	< 0.002 U	< 0.002 U	< 0.002 U	< 0.002 U	< 0.002 U	< 0.002 U
Chromium	7440-47-3	mg/L		0.1	< 0.005 U	< 0.005 U	< 0.005 U	< 0.005 U	< 0.005 U	< 0.005 U	0.0024 UB	< 0.005 U	< 0.005 U	< 0.005 U	**0.0023 J**	< 0.005 U	< 0.005 U	< 0.005 U	< 0.005 U	< 0.005 U	**0.035**	**0.0032 J**	< 0.005 U	< 0.005 U
Lead	7439-92-1	mg/L		0.015	< 0.01 U	< 0.01 U	< 0.01 U	< 0.01 U	< 0.01 U	< 0.01 U	< 0.01 U	< 0.01 U	< 0.01 U	< 0.01 U	< 0.01 U	< 0.01 U	< 0.01 U	< 0.01 U	< 0.01 U	**0.0025 J**	**0.011**	**0.017**	< 0.01 U	< 0.01 U
Selenium	7782-49-2	mg/L	0.078	0.05	< 0.01 U	< 0.01 U	< 0.01 U	< 0.01 U	< 0.01 U	< 0.01 U	< 0.01 U	< 0.01 U	**0.0058 J**	< 0.01 U	< 0.01 U	< 0.01 U	< 0.01 U	< 0.01 U	< 0.01 U	< 0.01 U	**0.0027 J**	**0.0074 J**	< 0.01 U	< 0.01 U
Silver	7440-22-4	mg/L	0.071		< 0.005 U	< 0.005 U	< 0.005 U	**0.0014 J**	**0.0016 J**	< 0.005 U	< 0.005 U	< 0.005 U	< 0.005 U	< 0.005 U	**0.0013 J**	**0.0012 J**	< 0.005 U	< 0.005 U	**0.00057 J**	< 0.005 U	**0.0004 J**	< 0.005 U	< 0.005 U	**0.0011 J**
Mercury	7439-97-6	mg/L	0.00063	0.002	< 0.0001 U	< 0.0001 U	< 0.0001 U	< 0.0001 U	< 0.0001 U	**0.000056 J**	< 0.0001 U	< 0.0001 U	< 0.0001 U	< 0.0001 U	< 0.0001 U	< 0.0001 U	< 0.0001 U	< 0.0001 U	< 0.0001 U	< 0.0001 U	**0.00014**	< 0.0001 U	< 0.0001 U	< 0.0001 U
Total Metals (mg/L)																								
Arsenic	7440-38-2	mg/L	0.000045	0.01	**0.0052 J**	**0.0052 J**	< 0.01 U	< 0.01 U	0.0048 UB	< 0.01 U	< 0.01 U	< 0.01 U	**0.0076 J**	< 0.01 U	< 0.01 U	0.0074 UB	< 0.01 U	< 0.01 U	< 0.01 U	< 0.01 U	**0.0075 J**	< 0.01 U	**0.0067 J**	< 0.01 U
Barium	7440-39-3	mg/L	2.9	2	**0.018 J**	**0.037**	**0.023 J**	**0.016 J**	**0.034**	**0.034**	**0.081**	**0.04**	**0.057**	**0.043**	**0.3**	**0.022 J**	**0.045**	**0.061**	**0.027**	**0.092**	**0.1**	**0.0076 J**	**0.099**	**0.0084 J**
Cadmium	7440-43-9	mg/L	0.0069	0.005	< 0.002 U	< 0.002 U	< 0.002 U	< 0.002 U	< 0.002 U	< 0.002 U	< 0.002 U	< 0.002 U	< 0.002 U	< 0.002 U	< 0.002 U	< 0.002 U	< 0.002 U	< 0.002 U	< 0.002 U	< 0.002 U	< 0.002 U	< 0.002 U	< 0.002 U	< 0.002 U
Chromium	7440-47-3	mg/L		0.1	**0.0025 J**	< 0.005 U	< 0.005 U	< 0.005 U	< 0.005 U	< 0.005 U	0.0021 UB	< 0.005 U	< 0.005 U	**0.004 J**	**0.0029 J**	0.0053 UB	**0.0022 J**	**0.0046 J**	< 0.005 U	0.0034 UB	**0.14**	**0.0062**	**0.0032 J**	< 0.005 U
Lead	7439-92-1	mg/L		0.015	< 0.01 U	< 0.01 U	< 0.01 U	< 0.01 U	< 0.01 U	< 0.01 U	< 0.01 U	**0.0024 J**	**0.016**	< 0.01 U	< 0.01 U	< 0.01 U	< 0.01 U	< 0.01 U	< 0.01 U	**0.0088 J**	**0.06**	**0.01**	**0.0052 J**	**0.0035 J**
Selenium	7782-49-2	mg/L	0.078	0.05	< 0.01 U	< 0.01 U	< 0.01 U	< 0.01 U	< 0.01 U	**0.003 J**	< 0.01 U	< 0.01 U	**0.0057 J**	< 0.01 U	< 0.01 U	< 0.01 U	< 0.01 U	< 0.01 U	< 0.01 U	< 0.01 U	**0.0099 J**	**0.0045 J**	< 0.01 U	< 0.01 U
Silver	7440-22-4	mg/L	0.071		< 0.005 U	0.00063 UB	< 0.005 U	< 0.005 U	**0.00095 J**	< 0.005 U	< 0.005 U	< 0.005 U	< 0.005 U	< 0.005 U	**0.0035 J**	< 0.005 U	< 0.005 U	< 0.005 U	< 0.005 U	< 0.005 U	**0.0024 J**	0.00088 UB	< 0.005 U	**0.00095 J**
Mercury	7439-97-6	mg/L	0.00063	0.002	< 0.0001 U	< 0.0001 U	< 0.0001 U	**0.000054 J**	< 0.0001 U	< 0.0001 U	< 0.0001 U	< 0.0001 U	< 0.0001 U	< 0.0001 U	**0.000062 J**	**0.000072 J**	< 0.0001 U	< 0.0001 U	< 0.0001 U	< 0.0001 U	**0.0011**	**0.000057 J**	< 0.0001 U	< 0.0001 U
Biogeochemical Parameters (mg/L)																								
Chloride	16887-00-6	mg/L			NA	NA	NA	NA	**4.4**	**4**	NA	NA	NA	NA	NA	NA	NA	NA	NA	NA	NA	NA	NA	NA
Sulfate	14808-79-8	mg/L			NA	NA	NA	NA	**210**	**230**	NA	NA	NA	NA	NA	NA	NA	NA	NA	NA	NA	NA	NA	NA
Nitrate	14797-55-8	mg/L	25	10	NA	NA	NA	NA	< 0.02 UJ	**0.038**	NA	NA	NA	NA	NA	NA	NA	NA	NA	NA	NA	NA	NA	NA
Nitrite	14797-65-0	mg/L	1.6	1	NA	NA	NA	NA	**0.016 J**	**0.019 J**	NA	NA	NA	NA	NA	NA	NA	NA	NA	NA	NA	NA	NA	NA
Alkalinity	ALK	mg/L			NA	NA	NA	NA	< 10 U	< 10 U	NA	NA	NA	NA	NA	NA	NA	NA	NA	NA	NA	NA	NA	NA
TOC	TOC	mg/l			NA	NA	NA	NA	**3.3**	**3.5**	NA	NA	NA	NA	NA	NA	NA	NA	NA	NA	NA	NA	NA	NA

Footnotes appear on last page.

Table 4-14
January 2011 Groundwater Analytical Data
SWMU 39
Fort Stewart, Georgia

				Location ID	G4MW032	G4MW032 DUP	G4MW033	G4MW034	G4MW035	G4MW036	G4MW037	G4MW038	G4MW039	G4MW040	G4MW041	G4MW042	G4MW043	G4MW044	G4MW045	G4MW046	G4MW047
				Sample Date	1/25/2011	1/25/2011	1/27/2011	1/26/2011	1/26/2011	1/27/2011	1/27/2011	1/26/2011	1/26/2011	1/28/2011	1/27/2011	1/26/2011	1/27/2011	1/26/2011	1/26/2011	1/27/2011	1/26/2011
Chemical Name	CAS No	Unit	Tap Water RSL[1]	MCL[2]																	
VOCs - USEPA Method SW8260 (µg/L)																					
1,1,1-Trichloroethane	71-55-6	ug/L	7500	200	< 1 UJ	< 1 U	< 1 U	< 1 U	< 1 U	< 1 U	< 1 U	< 1 U	< 1 U	< 1 U	< 10 U	< 1 U	< 1 U	< 1 U	< 1 U	< 1 U	< 1 U
1,1,2,2-Tetrachloroethane	79-34-5	ug/L	0.066		< 1 U	< 1 U	< 1 U	< 1 U	< 1 U	< 1 U	< 1 U	< 1 U	< 1 U	< 1 U	< 10 U	< 1 U	< 1 U	< 1 U	< 1 U	< 1 U	< 1 U
1,1,2-Trichloroethane	79-00-5	ug/L	0.24	5	< 1 U	< 1 U	< 1 U	< 1 U	< 1 U	< 1 U	< 1 U	< 1 U	< 1 U	< 1 U	< 10 U	< 1 U	< 1 U	< 1 U	< 1 U	< 1 U	< 1 U
1,1-Dichloroethane	75-34-3	ug/L	2.4		< 1 UJ	< 1 U	< 1 U	< 1 U	**0.28 J**	< 1 U	< 1 U	< 1 U	< 1 U	< 1 U	< 10 U	< 1 U	< 1 U	< 1 U	< 1 U	< 1 U	< 1 U
1,1-Dichloroethene	75-35-4	ug/L	260	7	< 1 UJ	< 1 U	**0.34 J**	< 1 U	**0.64 J**	< 1 U	< 1 U	< 1 U	< 1 U	**0.2 J**	< 10 U	< 1 U	**0.16 J**	< 1 U	< 1 U	< 1 U	< 1 U
1,2,4-Trichlorobenzene	120-82-1	ug/L	0.99	70	< 1 U	< 1 U	< 1 U	< 1 U	< 1 U	< 1 U	< 1 U	< 1 U	< 1 U	< 1 U	< 10 U	< 1 U	< 1 U	< 1 U	< 1 U	< 1 U	< 1 U
1,2-Dichlorobenzene	95-50-1	ug/L	280	600	< 1 U	< 1 U	< 1 U	< 1 U	< 1 U	< 1 U	< 1 U	< 1 U	< 1 U	< 1 U	< 10 U	< 1 U	< 1 U	< 1 U	< 1 U	< 1 U	< 1 U
1,2-Dichloroethane	107-06-2	ug/L	0.15	5	< 1 U	< 1 U	< 1 U	< 1 U	< 1 U	< 1 U	< 1 U	< 1 U	< 1 U	< 1 U	< 10 U	< 1 U	< 1 U	< 1 U	< 1 U	< 1 U	< 1 U
1,2-Dichloropropane	78-87-5	ug/L	0.38	5	< 1 U	< 1 U	< 1 U	< 1 U	< 1 U	< 1 U	< 1 U	< 1 U	< 1 U	< 1 U	< 10 U	< 1 U	< 1 U	< 1 U	< 1 U	< 1 U	< 1 U
1,3-Dichlorobenzene	541-73-1	ug/L			< 1 U	< 1 U	< 1 U	< 1 U	< 1 U	< 1 U	< 1 U	< 1 U	< 1 U	< 1 U	< 10 U	< 1 U	< 1 U	< 1 U	< 1 U	< 1 U	< 1 U
1,4-Dichlorobenzene	106-46-7	ug/L	0.42	75	< 1 UJ	< 1 U	< 1 U	< 1 U	< 1 U	< 1 U	< 1 U	< 1 U	< 1 U	< 1 U	< 10 U	< 1 U	< 1 U	< 1 U	< 1 U	< 1 U	< 1 U
2-Butanone	78-93-3	ug/L	4900		< 10 U	< 10 U	< 10 U	< 10 U	< 10 U	< 10 U	< 10 U	< 10 U	< 10 U	< 10 U	< 100 U	< 10 U	< 10 U	< 10 U	< 10 U	< 10 U	< 10 U
2-Hexanone	591-78-6	ug/L	34		< 10 U	< 10 U	< 10 U	< 10 U	< 10 U	< 10 U	< 10 U	< 10 U	< 10 U	< 10 U	< 100 U	< 10 U	< 10 U	< 10 U	< 10 U	< 10 U	< 10 U
4-Methyl-2-pentanone	108-10-1	ug/L	1000		< 10 U	< 10 U	< 10 U	< 10 U	< 10 U	< 10 U	< 10 U	< 10 U	< 10 U	< 10 U	< 100 U	< 10 U	< 10 U	< 10 U	< 10 U	< 10 U	< 10 U
Acetone	67-64-1	ug/L	12000		< 20 U	< 20 U	< 20 U	< 20 U	< 20 U	< 20 U	< 20 U	< 20 U	< 20 U	< 20 U	< 200 U	**29**	< 20 U	< 20 U	< 20 U	< 20 U	< 20 U
Benzene	71-43-2	ug/L	0.39	5	< 1 UJ	**0.19 J**	**0.22 J**	< 1 U	**16**	< 1 U	**2.1**	< 1 U	< 1 U	< 1 U	< 10 U	< 1 U	< 1 U	< 1 U	< 1 U	< 1 U	**0.23 J**
Bromodichloromethane	75-27-4	ug/L	0.12	80	< 1 UJ	< 1 U	< 1 U	< 1 U	< 1 U	< 1 U	< 1 U	< 1 U	< 1 U	< 1 U	< 10 U	< 1 U	< 1 U	< 1 U	< 1 U	< 1 U	< 1 U
Bromoform	75-25-2	ug/L	7.9	80	< 1 UJ	< 1 U	< 1 U	< 1 U	< 1 U	< 1 U	< 1 U	< 1 U	< 1 U	< 1 U	< 10 U	< 1 U	< 1 U	< 1 U	< 1 U	< 1 U	< 1 U
Bromomethane	74-83-9	ug/L	7		< 2 U	< 2 U	< 2 U	< 2 U	< 2 U	< 2 U	< 2 U	< 2 U	< 2 U	< 2 U	< 20 U	< 2 U	< 2 U	< 2 U	< 2 U	< 2 U	< 2 U
Carbon disulfide	75-15-0	ug/L	720		< 1 U	< 1 U	< 1 U	< 1 U	< 1 U	< 1 U	< 1 U	< 1 U	**0.33 J**	**0.27 J**	< 10 U	< 1 U	**0.38 J**	< 1 U	< 1 U	**0.38 J**	< 1 U
Carbon tetrachloride	56-23-5	ug/L	0.39	5	< 1 UJ	< 1 U	< 1 U	< 1 U	< 1 U	< 1 U	< 1 U	< 1 U	< 1 U	< 1 U	< 10 U	< 1 U	< 1 U	< 1 U	< 1 U	< 1 U	< 1 U
Chlorobenzene	108-90-7	ug/L	72	100	< 2 U	< 2 U	< 2 U	< 2 U	< 2 U	< 2 U	< 2 U	< 2 U	< 2 U	< 2 U	< 20 U	< 2 U	< 2 U	< 2 U	< 2 U	< 2 U	< 2 U
Chloroethane	75-00-3	ug/L	21000		< 2 U	< 2 U	< 2 U	< 2 U	< 2 U	< 2 U	< 2 U	< 2 U	< 2 U	< 2 U	< 20 U	< 2 U	< 2 U	< 2 U	< 2 U	< 2 U	< 2 U
Chloroform	67-66-3	ug/L	0.19	80	< 1 UJ	< 1 U	< 1 U	< 1 U	< 1 U	< 1 U	< 1 U	< 1 U	< 1 U	< 1 U	< 10 U	< 1 U	< 1 U	< 1 U	< 1 U	**0.55 J**	**1.1**
Chloromethane	74-87-3	ug/L	190		< 1 U	< 1 U	< 1 U	< 1 U	< 1 U	< 1 U	< 1 U	< 1 U	< 1 U	< 1 U	< 10 U	< 1 U	< 1 U	< 1 U	< 1 U	< 1 U	< 1 U
cis-1,2-Dichloroethene	156-59-2	ug/L	28	70	**1.9**	**1.8**	**4.9**	< 1 U	**7.5**	**0.53 J**	< 1 U	< 1 U	< 1 U	**24**	**97**	< 1 U	**1.7**	**0.93 J**	< 1 U	**0.33 J**	**0.28 J**
cis-1,3-Dichloropropene	10061-01-5	ug/L			< 1 U	< 1 U	< 1 U	< 1 U	< 1 U	< 1 U	< 1 U	< 1 U	< 1 U	< 1 U	< 10 U	< 1 U	< 1 U	< 1 U	< 1 U	< 1 U	< 1 U
Dibromochloromethane	124-48-1	ug/L	0.15	80	< 1 UJ	< 1 U	< 1 U	< 1 U	< 1 U	< 1 U	< 1 U	< 1 U	< 1 U	< 1 U	< 10 U	< 1 U	< 1 U	< 1 U	< 1 U	< 1 U	< 1 U
Ethylbenzene	100-41-4	ug/L	1.3	700	< 1 UJ	< 1 U	< 1 U	< 1 U	< 1 U	< 1 U	< 1 U	< 1 U	< 1 U	< 1 U	< 10 U	< 1 U	< 1 U	< 1 U	< 1 U	< 1 U	**0.43 J**
Methylene chloride	75-09-2	ug/L	9.9	5	< 1 U	< 1 U	< 1 U	< 1 U	< 1 U	< 1 U	< 1 U	< 1 U	< 1 U	< 1 U	< 10 U	< 1 U	< 1 U	< 1 U	< 1 U	< 1 U	< 1 U
Styrene	100-42-5	ug/L	1100	100	< 1 UJ	< 1 U	< 1 U	< 1 U	< 1 U	< 1 U	< 1 U	< 1 U	< 1 U	< 1 U	< 10 U	< 1 U	< 1 U	< 1 U	< 1 U	< 1 U	< 1 U
tert-Butyl methyl ether	1634-04-4	ug/L	12		< 1 U	< 1 U	< 1 U	< 1 U	< 1 U	< 1 U	< 1 U	< 1 U	< 1 U	< 1 U	< 10 U	< 1 U	< 1 U	< 1 U	< 1 U	< 1 U	< 1 U
Tetrachloroethene	127-18-4	ug/L	9.7	5	**12**	**14**	**2.4**	< 1 U	< 1 U	< 1 U	< 1 U	< 1 U	< 1 U	< 1 U	**290**	< 1 U	< 1 U	< 1 U	< 1 U	< 1 U	**5.9**
Toluene	108-88-3	ug/L	860	1000	< 1 U	< 1 U	< 1 U	< 1 U	< 1 U	< 1 U	< 1 U	< 1 U	< 1 U	< 1 U	< 10 U	< 1 U	< 1 U	< 1 U	< 1 U	< 1 U	**1.9**
trans-1,2-Dichloroethene	156-60-5	ug/L	86	100	< 1 UJ	< 1 U	**0.66 J**	< 1 U	**2**	< 1 U	< 1 U	< 1 U	< 1 U	**4.7**	**6.4 J**	< 1 U	**0.47 J**	< 1 U	< 1 U	< 1 U	< 1 U
trans-1,3-Dichloropropene	10061-02-6	ug/L			< 1 U	< 1 U	< 1 U	< 1 U	< 1 U	< 1 U	< 1 U	< 1 U	< 1 U	< 1 U	< 10 U	< 1 U	< 1 U	< 1 U	< 1 U	< 1 U	< 1 U
Trichloroethene	79-01-6	ug/L	0.44	5	**14**	**14**	**33**	< 1 U	**3.7**	**0.38 J**	< 1 U	< 1 U	< 1 U	**52**	**550**	< 1 U	**1.4**	**4.9**	< 1 U	**2.5**	**3.2**
Vinyl chloride	75-01-4	ug/L	0.015	2	< 1 U	< 1 U	< 1 U	< 1 U	< 1 U	< 1 U	< 1 U	< 1 U	< 1 U	< 1 U	< 10 U	< 1 U	< 1 U	< 1 U	< 1 U	< 1 U	< 1 U
Xylenes (total)	1330-20-7	ug/L	190	10000	< 1 UJ	< 1 U	< 1 U	< 1 U	< 1 U	< 1 U	< 1 U	< 1 U	< 1 U	< 1 U	< 10 U	< 1 U	< 1 U	< 1 U	< 1 U	< 1 U	**1.6**
SVOCs - U.S. EPA Method 8270 (µg/L)																					
2,4,5-Trichlorophenol	95-95-4	ug/L	890		< 1 U	< 1 U	< 1 U	< 1 U	< 1 U	< 1 U	< 1 U	< 1 U	< 1 U	< 1 U	< 1 U	< 1 U	< 1 U	< 1 U	< 1 U	< 1 U	< 1 U
2,4,6-Trichlorophenol	88-06-2	ug/L	3.5		< 1 U	< 1 U	< 1 U	< 1 U	< 1 U	< 1 U	< 1 U	< 1 U	< 1 U	< 1 U	< 1 U	< 1 U	< 1 U	< 1 U	< 1 U	< 1 U	< 1 U
2,4-Dichlorophenol	120-83-2	ug/L	35		< 1 U	< 1 U	< 1 U	< 1 U	< 1 U	< 1 U	< 1 U	< 1 U	< 1 U	< 1 U	< 1 U	< 1 U	< 1 U	< 1 U	< 1 U	< 1 U	< 1 U
2,4-Dimethylphenol	105-67-9	ug/L	270		< 1 U	< 1 U	< 1 U	< 1 U	< 1 U	< 1 U	< 1 U	< 1 U	< 1 U	< 1 U	< 1 U	< 1 U	< 1 U	< 1 U	< 1 U	< 1 U	< 1 U
2,4-Dinitrophenol	51-28-5	ug/L	30		< 5 U	< 5 U	< 5.1 U	< 5 U	< 5.1 U	< 5.1 U	< 5.2 U	< 5.1 U	< 5.1 U	< 5 U	< 5.1 U	< 5.1 U	< 5.1 U	< 5 U	< 5.1 U	< 5.1 U	< 5.1 U
2,4-Dinitrotoluene	121-14-2	ug/L	0.2		< 2 U	< 2 U	< 2 U	< 2 U	< 2 U	< 2 U	< 2.1 U	< 2 U	< 2 U	< 2 U	< 2 U	< 2 U	< 2 U	< 2 U	< 2 U	< 2 U	< 2 U
2,6-Dinitrotoluene	606-20-2	ug/L	15		< 2 U	< 2 U	< 2 U	< 2 U	< 2 U	< 2 U	< 2.1 U	< 2 U	< 2 U	< 2 U	< 2 U	< 2 U	< 2 U	< 2 U	< 2 U	< 2 U	< 2 U
2-Chloronaphthalene	91-58-7	ug/L	550		< 1 U	< 1 U	< 1 U	< 1 U	< 1 U	< 1 U	< 1 U	< 1 U	< 1 U	< 1 U	< 1 U	< 1 U	< 1 U	< 1 U	< 1 U	< 1 U	< 1 U
2-Chlorophenol	95-57-8	ug/L	71		< 1 U	< 1 U	< 1 U	< 1 U	< 1 U	< 1 U	< 1 U	< 1 U	< 1 U	< 1 U	< 1 U	< 1 U	< 1 U	< 1 U	< 1 U	< 1 U	< 1 U
2-Methyl-4,6-dinitrophenol	534-52-1	ug/L	1.2		< 5 U	< 5 U	< 5.1 U	< 5 U	< 5.1 U	< 5.1 U	< 5.2 U	< 5.1 U	< 5.1 U	< 5 U	< 5.1 U	< 5.1 U	< 5.1 U	< 5 U	< 5.1 U	< 5.1 U	< 5.1 U
2-Methylnaphthalene	91-57-6	ug/L	27		< 1 U	< 1 U	< 1 U	< 1 U	< 1 U	< 1 U	< 1 U	< 1 U	< 1 U	< 1 U	< 1 U	< 1 U	< 1 U	< 1 U	< 1 U	< 1 U	< 1 U
2-Methylphenol	95-48-7	ug/L	720		< 1 U	< 1 U	< 1 U	< 1 U	< 1 U	< 1 U	< 1 U	< 1 U	< 1 U	< 1 U	< 1 U	< 1 U	< 1 U	< 1 U	< 1 U	< 1 U	< 1 U
2-Nitrobenzenamine	88-74-4	ug/L	150		< 2 U	< 2 U	< 2 U	< 2 U	< 2 U	< 2 U	< 2.1 U	< 2 U	< 2 U	< 2 U	< 2 U	< 2 U	< 2 U	< 2 U	< 2 U	< 2 U	< 2 U
2-Nitrophenol	88-75-5	ug/L			< 2 U	< 2 U	< 2 U	< 2 U	< 2 U	< 2 U	< 2.1 U	< 2 U	< 2 U	< 2 U	< 2 U	< 2 U	< 2 U	< 2 U	< 2 U	< 2 U	< 2 U
3,3'-Dichlorobenzidine	91-94-1	ug/L	0.11		< 5 U	< 5 U	< 5.1 U	< 5 U	< 5.1 U	< 5.1 U	< 5.2 U	< 5.1 U	< 5.1 U	< 5 U	< 5.1 U	< 5.1 U	< 5.1 U	< 5 U	< 5.1 U	< 5.1 U	< 5.1 U
3-Nitrobenzenamine	99-09-2	ug/L			< 2 U	< 2 U	< 2 U	< 2 U	< 2 U	< 2 U	< 2.1 U	< 2 U	< 2 U	< 2 U	< 2 U	< 2 U	< 2 U	< 2 U	< 2 U	< 2 U	< 2 U
4-Bromophenyl phenyl ether	101-55-3	ug/L			< 1 U	< 1 U	< 1 U	< 1 U	< 1 U	< 1 U	< 1 U	< 1 U	< 1 U	< 1 U	< 1 U	< 1 U	< 1 U	< 1 U	< 1 U	< 1 U	< 1 U
4-Chloro-3-methylphenol	59-50-7	ug/L	1100		< 1 U	< 1 U	< 1 U	< 1 U	< 1 U	< 1 U	< 1 U	< 1 U	< 1 U	< 1 U	< 1 U	< 1 U	< 1 U	< 1 U	< 1 U	< 1 U	< 1 U
4-Chlorobenzenamine	106-47-8	ug/L	0.32		< 1 UJ	< 1 U	< 1 U	< 1 U	< 1 U	< 1 U	< 1 U	< 1 U	< 1 U	< 1 U	< 1 U	< 1 U	< 1 R	< 1 U	< 1 U	< 1 U	< 1 U
4-Chlorophenyl phenyl ether	7005-72-3	ug/L			< 1 U	< 1 U	< 1 U	< 1 U	< 1 U	< 1 U	< 1 U	< 1 U	< 1 U	< 1 U	< 1 U	< 1 U	< 1 U	< 1 U	< 1 U	< 1 U	< 1 U
4-Methylphenol	106-44-5	ug/L	1400		< 2 U	< 2 U	< 2 U	< 2 U	< 2 U	< 2 U	< 2.1 U	< 2 U	< 2 U	< 2 U	< 2 U	**1.4 J**	< 2 U	< 2 U	< 2 U	< 2 U	< 2 U
4-Nitrobenzenamine	100-01-6	ug/L	3.3		< 2 U	< 2 U	< 2 U	< 2 U	< 2 U	< 2 U	< 2.1 U	< 2 U	< 2 U	< 2 U	< 2 U	< 2 U	< 2 U	< 2 U	< 2 U	< 2 U	< 2 U
4-Nitrophenol	100-02-7	ug/L			< 5 U	< 5 U	< 5.1 U	< 5 U	< 5.1 U	< 5.1 U	< 5.2 U	< 5.1 U	< 5.1 U	< 5 U	< 5.1 U	< 5.1 U	< 5.1 U	< 5 U	< 5.1 U	< 5.1 U	< 5.1 U
Acenaphthene	83-32-9	ug/L	400		< 1 U	< 1 U	< 1 U	< 1 U	< 1 U	< 1 U	< 1 U	< 1 U	< 1 U	< 1 U	< 1 U	< 1 U	< 1 U	< 1 U	< 1 U	< 1 U	< 1 U
Acenaphthylene	208-96-8	ug/L			< 1 U	< 1 U	< 1 U	< 1 U	< 1 U	< 1 U	< 1 U	< 1 U	< 1 U	< 1 U	< 1 U	< 1 U	< 1 U	< 1 U	< 1 U	< 1 U	< 1 U
Anthracene	120-12-7	ug/L	1300		< 1 U	< 1 U	< 1 U	< 1 U	< 1 U	< 1 U	< 1 U	< 1 U	< 1 U	< 1 U	< 1 U	< 1 U	< 1 U	< 1 U	< 1 U	< 1 U	< 1 U
Benz(a)anthracene	56-55-3	ug/L	0.029		< 1 UJ	< 1 U	< 1 U	< 1 U	< 1 U	< 1 U	< 1 U	< 1 U	< 1 U	< 1 U	< 1 U	< 1 U	< 1 UJ	< 1 U	< 1 U	< 1 U	< 1 U

Footnotes appear on last page.

Table 4-14
January 2011 Groundwater Analytical Data
SWMU 39
Fort Stewart, Georgia

				Location ID	G4MW032	G4MW032 DUP	G4MW033	G4MW034	G4MW035	G4MW036	G4MW037	G4MW038	G4MW039	G4MW040	G4MW041	G4MW042	G4MW043	G4MW044	G4MW045	G4MW046	G4MW047
				Sample Date	1/25/2011	1/25/2011	1/27/2011	1/26/2011	1/26/2011	1/27/2011	1/27/2011	1/26/2011	1/26/2011	1/28/2011	1/27/2011	1/26/2011	1/27/2011	1/26/2011	1/26/2011	1/27/2011	1/26/2011
Chemical Name	CAS No	Unit	Tap Water RSL[1]	MCL[2]																	
SVOCs continued - U.S. EPA Method 8270 (µg/L)																					
Benzo(a)pyrene	50-32-8	ug/L	0.0029	0.2	< 1 UJ	< 1 U	< 1 UJ	< 1 UJ	< 1 UJ	< 1 U	< 1 UJ	< 1 U	< 1 UJ	< 1 UJ	< 1 U	< 1 U	< 1 UJ	< 1 UJ	< 1 UJ	< 1 UJ	< 1 U
Benzo(b)fluoranthene	205-99-2	ug/L	0.029		< 1 UJ	< 1 U	< 1 U	< 1 U	< 1 U	< 1 U	< 1 U	< 1 U	< 1 U	< 1 U	< 1 U	< 1 U	< 1 U	< 1 U	< 1 U	< 1 U	< 1 U
Benzo(ghi)perylene	191-24-2	ug/L			< 1 UJ	< 1 U	< 1 U	< 1 U	< 1 U	< 1 U	< 1 U	< 1 U	< 1 U	< 1 U	< 1 U	< 1 U	< 1 UJ	< 1 U	< 1 U	< 1 U	< 1 U
Benzo(k)fluoranthene	207-08-9	ug/L	0.29		< 1 U	< 1 U	< 1 U	< 1 U	< 1 U	< 1 U	< 1 U	< 1 U	< 1 U	< 1 U	< 1 U	< 1 U	< 1 U	< 1 U	< 1 U	< 1 U	< 1 U
Bis(2-chloroethoxy)methane	111-91-1	ug/L	46		< 1 U	< 1 U	< 1 U	< 1 U	< 1 U	< 1 U	< 1 U	< 1 U	< 1 U	< 1 U	< 1 U	< 1 U	< 1 U	< 1 U	< 1 U	< 1 U	< 1 U
Bis(2-chloroisopropyl) ether	108-60-1	ug/L	0.31		< 1 U	< 1 U	< 1 U	< 1 U	< 1 U	< 1 U	< 1 U	< 1 U	< 1 U	< 1 U	< 1 U	< 1 U	< 1 U	< 1 U	< 1 U	< 1 U	< 1 U
Bis(2-ethylhexyl)phthalate	117-81-7	ug/L	4.8	6	< 5 R	< 5 U	< 5.1 U	< 5 U	< 5.1 U	< 5.1 U	< 5.2 U	< 5.1 U	< 5.1 U	< 5 U	< 5.1 U	< 5.1 U	< 5.1 U	< 5 U	< 5.1 U	< 5.1 U	< 5.1 U
Butyl benzyl phthalate	85-68-7	ug/L	14		< 5 U	< 5 U	< 5.1 U	< 5 U	< 5.1 U	< 5.1 U	< 5.2 U	< 5.1 U	< 5.1 U	< 5 U	< 5.1 U	< 5.1 U	< 5.1 U	< 5 U	< 5.1 U	< 5.1 U	< 5.1 U
Carbazole	86-74-8	ug/L			< 1 U	< 1 U	< 1 U	< 1 U	< 1 U	< 1 U	< 1 U	< 1 U	< 1 U	< 1 U	< 1 U	< 1 U	< 1 U	< 1 U	< 1 U	< 1 U	< 1 U
Chrysene	218-01-9	ug/L	2.9		< 1 UJ	< 1 U	< 1 U	< 1 U	< 1 U	< 1 U	< 1 U	< 1 U	< 1 U	< 1 U	< 1 U	< 1 U	< 1 U	< 1 U	< 1 U	< 1 U	< 1 U
Dibenz(a,h)anthracene	53-70-3	ug/L	0.0029		< 1 UJ	< 1 U	< 1 U	< 1 U	< 1 U	< 1 U	< 1 U	< 1 U	< 1 U	< 1 U	< 1 U	< 1 U	< 1 UJ	< 1 U	< 1 U	< 1 U	< 1 U
Dibenzofuran	132-64-9	ug/L	5.8		< 1 U	< 1 U	< 1 U	< 1 U	< 1 U	< 1 U	< 1 U	< 1 U	< 1 U	< 1 U	< 1 U	< 1 U	< 1 U	< 1 U	< 1 U	< 1 U	< 1 U
Diethyl phthalate	84-66-2	ug/L	11000		< 5 U	< 5 U	< 5.1 U	< 5 U	< 5.1 U	< 5.1 U	< 5.2 U	< 5.1 U	< 5.1 U	< 5 U	< 5.1 U	< 5.1 U	< 5.1 U	< 5 U	< 5.1 U	< 5.1 U	< 5.1 U
Dimethyl phthalate	131-11-3	ug/L			< 5 U	< 5 U	< 5.1 U	< 5 U	< 5.1 U	< 5.1 U	< 5.2 U	< 5.1 U	< 5.1 U	< 5 U	< 5.1 U	< 5.1 U	< 5.1 U	< 5 U	< 5.1 U	< 5.1 U	< 5.1 U
Di-n-butyl phthalate	84-74-2	ug/L	670		< 5 U	< 5 U	< 5.1 U	< 5 U	< 5.1 U	< 5.1 U	< 5.2 U	< 5.1 U	< 5.1 U	< 5 U	< 5.1 U	< 5.1 U	< 5.1 U	< 5 U	< 5.1 U	< 5.1 U	< 5.1 U
Di-n-octylphthalate	117-84-0	ug/L	190		< 5 R	< 5 U	< 5.1 U	< 5 U	< 5.1 U	< 5.1 U	< 5.2 U	< 5.1 U	< 5.1 U	< 5 U	< 5.1 U	< 5.1 U	< 5.1 UJ	< 5 U	< 5.1 U	< 5.1 U	< 5.1 U
Fluoranthene	206-44-0	ug/L	630		< 1 U	< 1 U	< 1 U	< 1 U	< 1 U	< 1 U	< 1 U	< 1 U	< 1 U	< 1 U	< 1 U	< 1 U	< 1 U	< 1 U	< 1 U	< 1 U	< 1 U
Fluorene	86-73-7	ug/L	220		< 1 U	< 1 U	< 1 U	< 1 U	< 1 U	< 1 U	< 1 U	< 1 U	< 1 U	< 1 U	< 1 U	< 1 U	< 1 U	< 1 U	< 1 U	< 1 U	< 1 U
Hexachlorobenzene	118-74-1	ug/L	0.042	1	< 1 U	< 1 U	< 1 U	< 1 U	< 1 U	< 1 U	< 1 U	< 1 U	< 1 U	< 1 U	< 1 U	< 1 U	< 1 U	< 1 U	< 1 U	< 1 U	< 1 U
Hexachlorobutadiene	87-68-3	ug/L	0.26		< 1 U	< 1 U	< 1 U	< 1 U	< 1 U	< 1 U	< 1 U	< 1 U	< 1 U	< 1 U	< 1 U	< 1 U	< 1 U	< 1 U	< 1 U	< 1 U	< 1 U
Hexachlorocyclopentadiene	77-47-4	ug/L	22	50	< 5 U	< 5 U	< 5.1 U	< 5 U	< 5.1 U	< 5.1 U	< 5.2 U	< 5.1 U	< 5.1 U	< 5 U	< 5.1 U	< 5.1 U	< 5.1 U	< 5 U	< 5.1 U	< 5.1 U	< 5.1 U
Hexachloroethane	67-72-1	ug/L	0.79		< 1 U	< 1 U	< 1 U	< 1 U	< 1 U	< 1 U	< 1 U	< 1 U	< 1 U	< 1 U	< 1 U	< 1 U	< 1 U	< 1 U	< 1 U	< 1 U	< 1 U
Indeno(1,2,3-cd)pyrene	193-39-5	ug/L	0.029		< 1 UJ	< 1 U	< 1 U	< 1 U	< 1 U	< 1 U	< 1 U	< 1 U	< 1 U	< 1 U	< 1 U	< 1 U	< 1 UJ	< 1 U	< 1 U	< 1 U	< 1 U
Isophorone	78-59-1	ug/L	67		< 1 U	< 1 U	< 1 U	< 1 U	< 1 U	< 1 U	< 1 U	< 1 U	< 1 U	< 1 U	< 1 U	< 1 U	< 1 U	< 1 U	< 1 U	< 1 U	< 1 U
Naphthalene	91-20-3	ug/L	0.14		< 1 U	< 1 U	< 1 U	< 1 U	< 1 U	< 1 U	< 1 U	< 1 U	< 1 U	< 1 U	< 1 U	< 1 U	< 1 U	< 1 U	< 1 U	< 1 U	< 1 U
Nitrobenzene	98-95-3	ug/L	0.12		< 1 U	< 1 U	< 1 U	< 1 U	< 1 U	< 1 U	< 1 U	< 1 U	< 1 U	< 1 U	< 1 U	< 1 U	< 1 U	< 1 U	< 1 U	< 1 U	< 1 U
N-Nitroso-di-n-propylamine	621-64-7	ug/L	0.0093		< 1 U	< 1 U	< 1 U	< 1 U	< 1 U	< 1 U	< 1 U	< 1 U	< 1 U	< 1 U	< 1 U	< 1 U	< 1 U	< 1 U	< 1 U	< 1 U	< 1 U
N-Nitrosodiphenylamine	86-30-6	ug/L	10		< 1 U	< 1 U	< 1 U	< 1 U	< 1 U	< 1 U	< 1 U	< 1 U	< 1 U	< 1 U	< 1 U	< 1 U	< 1 U	< 1 U	< 1 U	< 1 U	< 1 U
Pentachlorophenol	87-86-5	ug/L	0.035	1	< 5 U	< 5 U	< 5.1 U	< 5 U	< 5.1 U	< 5.1 U	< 5.2 U	< 5.1 U	< 5.1 U	< 5 U	< 5.1 U	< 5.1 U	< 5.1 U	< 5 U	< 5.1 U	< 5.1 U	< 5.1 U
Phenanthrene	85-01-8	ug/L			< 1 U	< 1 U	< 1 U	< 1 U	< 1 U	< 1 U	< 1 U	< 1 U	< 1 U	< 1 U	< 1 U	< 1 U	< 1 U	< 1 U	< 1 U	< 1 U	< 1 U
Phenol	108-95-2	ug/L	4500		< 1 U	< 1 U	< 1 U	< 1 U	< 1 U	< 1 U	< 1 U	< 1 U	< 1 U	< 1 U	< 1 U	< 1 U	< 1 U	< 1 U	< 1 U	< 1 U	< 1 U
Pyrene	129-00-0	ug/L	87		< 1 U	< 1 U	< 1 U	< 1 U	< 1 U	< 1 U	< 1 U	< 1 U	< 1 U	< 1 U	< 1 U	< 1 U	< 1 U	< 1 U	< 1 U	< 1 U	< 1 U
Dissolved Metals (mg/L)																					
Arsenic	7440-38-2	mg/L	0.000045	0.01	< 0.01 U	< 0.01 U	< 0.01 U	< 0.01 U	< 0.01 U	**0.012**	0.009 UB	< 0.01 U	**0.008 J**	0.0059 UB	< 0.01 U	< 0.01 U	< 0.01 U	< 0.01 U	0.007 UB	< 0.01 U	< 0.01 U
Barium	7440-39-3	mg/L	2.9	2	**0.12**	**0.11**	**0.042**	**0.06**	**0.039**	**0.019 J**	**0.028**	**0.035**	**0.058**	**0.065**	**0.11**	**0.058**	**0.092**	**0.09**	**0.06**	**0.051**	**0.064**
Cadmium	7440-43-9	mg/L	0.0069	0.005	**0.00066 J**	**0.00064 J**	< 0.002 U	< 0.002 U	< 0.002 U	< 0.002 U	< 0.002 U	< 0.002 U	< 0.002 U	< 0.002 U	< 0.002 U	< 0.002 U	< 0.002 U	< 0.002 U	< 0.002 U	< 0.002 U	< 0.002 U
Chromium	7440-47-3	mg/L		0.1	< 0.005 U	< 0.005 U	< 0.005 U	0.0022 UB	< 0.005 U	< 0.005 U	< 0.005 U	< 0.005 U	< 0.005 U	< 0.005 U	< 0.005 U	< 0.005 U	< 0.005 U	< 0.005 U	< 0.005 U	0.0022 UB	**0.0023 J**
Lead	7439-92-1	mg/L		0.015	**0.0021 J**	< 0.01 U	< 0.01 U	< 0.01 U	< 0.01 U	< 0.01 U	< 0.01 U	< 0.01 U	< 0.01 U	0.014 UB	**0.011**	< 0.01 U	< 0.01 U	**0.0025 J**	< 0.01 U	**0.0032 J**	< 0.01 U
Selenium	7782-49-2	mg/L	0.078	0.05	< 0.01 U	< 0.01 U	< 0.01 U	< 0.01 U	< 0.01 U	**0.0051 J**	< 0.01 U	< 0.01 U	< 0.01 U	< 0.01 U	< 0.01 U	< 0.01 U	< 0.01 U	< 0.01 U	< 0.01 U	< 0.01 U	< 0.01 U
Silver	7440-22-4	mg/L	0.071		**0.0017 J**	**0.0018 J**	< 0.005 U	< 0.005 U	< 0.005 U	< 0.005 U	< 0.005 U	**0.00063 J**	< 0.005 U	< 0.005 U	< 0.005 U	**0.0011 J**	< 0.005 U	< 0.005 U	< 0.005 U	< 0.005 U	**0.00095 J**
Mercury	7439-97-6	mg/L	0.00063	0.002	< 0.0001 U	< 0.0001 U	< 0.0001 U	< 0.0001 U	< 0.0001 U	< 0.0001 U	< 0.0001 U	< 0.0001 U	< 0.0001 U	< 0.0001 U	< 0.0001 U	< 0.0001 U	< 0.0001 U	**0.00006 J**	< 0.0001 U	< 0.0001 U	< 0.0001 U
Total Metals (mg/L)																					
Arsenic	7440-38-2	mg/L	0.000045	0.01	< 0.01 U	< 0.01 U	**0.0052 J**	< 0.01 U	< 0.01 U	**0.015**	0.0057 UB	< 0.01 U	**0.021**	0.0057 UB	< 0.01 U	< 0.01 U	< 0.01 U	< 0.01 U	0.0061 UB	< 0.01 U	< 0.01 U
Barium	7440-39-3	mg/L	2.9	2	**0.13**	**0.13**	**0.042**	**0.068**	**0.042**	**0.019 J**	**0.03**	**0.049**	**0.2**	**0.089**	**0.11**	**0.071**	**0.087**	**0.083**	**0.062**	**0.053**	**0.057**
Cadmium	7440-43-9	mg/L	0.0069	0.005	< 0.002 U	< 0.002 U	< 0.002 U	< 0.002 U	< 0.002 U	< 0.002 U	< 0.002 U	**0.00073 J**	< 0.002 U	< 0.002 U	< 0.002 U	< 0.002 U	< 0.002 U	< 0.002 U	< 0.002 U	0.00062 UB	< 0.002 U
Chromium	7440-47-3	mg/L		0.1	< 0.005 U	< 0.005 U	**0.0036 J**	0.0044 UB	0.0035 UB	< 0.005 U	0.0042 UB	**0.024**	**0.15**	**0.022**	**0.0021 J**	< 0.005 U	< 0.005 U	0.0041 UB	< 0.005 U	< 0.005 U	**0.024**
Lead	7439-92-1	mg/L		0.015	< 0.01 U	< 0.01 U	< 0.01 U	< 0.01 U	< 0.01 U	**0.0032 J**	< 0.01 U	< 0.01 U	**0.12**	0.025 UB	**0.0058 J**	< 0.01 U	< 0.01 U	< 0.01 U	< 0.01 U	< 0.01 U	**0.014**
Selenium	7782-49-2	mg/L	0.078	0.05	< 0.01 U	< 0.01 U	< 0.01 U	< 0.01 U	< 0.01 U	< 0.01 U	< 0.01 U	**0.0033 J**	**0.0032 J**	**0.0027 J**	**0.0044 J**	< 0.01 U	< 0.01 U	< 0.01 U	< 0.01 U	< 0.01 U	**0.0056 J**
Silver	7440-22-4	mg/L	0.071		**0.0057**	**0.0056**	< 0.005 U	< 0.005 U	< 0.005 U	< 0.005 U	< 0.005 U	< 0.005 U	< 0.005 U	< 0.005 U	< 0.005 U	< 0.005 U	< 0.005 U	< 0.005 U	< 0.005 U	< 0.005 U	**0.0012 J**
Mercury	7439-97-6	mg/L	0.00063	0.002	**0.000057 J**	< 0.0001 U	< 0.0001 U	< 0.0001 U	< 0.0001 U	**0.000055 J**	< 0.0001 U	**0.000075 J**	**0.000084 J**	< 0.0001 U	< 0.0001 U	< 0.0001 U	< 0.0001 U	< 0.0001 U	< 0.0001 U	< 0.0001 U	**0.00019**
Biogeochemical Parameters (mg/L)																					
Chloride	16887-00-6	mg/L			NA	NA	NA	NA	NA	NA	NA	**3.5**	NA	**5.2**	NA	**5.2**	NA	NA	NA	NA	**14**
Sulfate	14808-79-8	mg/L			NA	NA	NA	NA	NA	NA	NA	**5.1**	NA	**140**	NA	**5**	NA	NA	NA	NA	**130**
Nitrate	14797-55-8	mg/L	25	10	NA	NA	NA	NA	NA	NA	NA	< 0.02 U	NA	**0.34 J**	NA	**0.8**	NA	NA	NA	NA	< 0.02 U
Nitrite	14797-65-0	mg/L	1.6	1	NA	NA	NA	NA	NA	NA	NA	**0.067**	NA	< 0.02 UJ	NA	**0.035**	NA	NA	NA	NA	**0.032**
Alkalinity	ALK	mg/L			NA	NA	NA	NA	NA	NA	NA	**12**	NA	< 10 U	NA	**280**	NA	NA	NA	NA	**37**
TOC	TOC	mg/l			NA	NA	NA	NA	NA	NA	NA	**6.3**	NA	**5.9**	NA	**9.3**	NA	NA	NA	NA	**40**

Notes:

[1]	U.S. EPA Regional Screening Level for tap water as of November 2012
[2]	U.S. EPA Maximum Contaminant Level as of November 2012
	Exceedences of tap water RSL are shaded gray
	Sample results were screened against the RSL. If no RSL was available, then the MCL was used.
µg/L	Micrograms per liter.
B	Detected in method blank.
J	Constituent concentration was estimated.
U	Not detected at laboratory detection limit
NA	Not analyzed.
DUP	Duplicate Sample

Table 4-15
May 2011 Water and Product Levels
SWMU-39
Fort Stewart, Georgia

Monitoring Well ID	TOC Elevation (feet amsl)	Depth to Product (feet btoc)	Depth to Water (feet btoc)	Water Elevation (feet amsl) (Calculated)*	Product Elevation (feet amsl)	Product Thickness (feet)
G4MW001	74.82	5.79	6.44	68.97	69.03	0.65
G4MW002	74.33	4.94	8.20	69.06	69.39	3.26
G4MW003	74.57	ND	5.10	69.47	NA	NA
G4MW004	74.51	ND	4.93	69.58	NA	NA
G4MW005	74.29	ND	NM	NM	NA	NA
G4MW006	74.38	ND	5.67	68.71	NA	NA
G4MW007	74.74	ND	6.21	68.53	NA	NA
G4MW008	74.36	ND	6.00	68.36	NA	NA
G4MW009	74.75	ND	5.54	69.21	NA	NA
G4MW010	74.23	ND	5.39	68.84	NA	NA
G4MW011	74.08	ND	5.95	68.13	NA	NA
G4MW012	74.27	ND	5.82	68.45	NA	NA
G4MW013R	74.70	ND	6.17	68.53	NA	NA
G4MW014	74.96	ND	4.46	70.50	NA	NA
G4MW015	74.82	ND	4.50	70.32	NA	NA
G4MW016	72.28	ND	4.58	67.70	NA	NA
G4MW017	71.84	ND	5.24	66.60	NA	NA
G4MW018	74.27	ND	4.94	69.33	NA	NA
G4MW019	74.76	ND	4.61	70.15	NA	NA
G4MW020	74.64	ND	4.51	70.13	NA	NA
G4MW021	74.18	ND	4.87	69.31	NA	NA
G4MW022	72.59	ND	8.40	64.19	NA	NA
G4MW023	75.58	ND	8.61	66.97	NA	NA
G4MW024	74.41	ND	6.10	68.31	NA	NA
G4MW025	74.52	ND	4.75	69.77	NA	NA
G4MW026	76.01	ND	9.71	66.30	NA	NA
G4MW027	76.50	ND	5.78	70.72	NA	NA
G4MW028	82.91	ND	5.65	77.26	NA	NA
G4MW029	84.07	ND	7.23	76.84	NA	NA
G4MW030	67.64	ND	7.01	60.63	NA	NA
G4MW031	78.96	ND	NM	NM	NA	NA
G4MW032	74.27	ND	4.47	69.80	NA	NA
G4MW033	74.23	ND	4.43	69.80	NA	NA
G4MW034	70.19	ND	3.00	67.19	NA	NA
G4MW035	70.52	ND	5.55	64.97	NA	NA
G4MW036	83.62	ND	7.93	75.69	NA	NA
G4MW037	82.47	ND	5.60	76.87	NA	NA
G4MW038	85.12	ND	7.67	77.45	NA	NA
G4MW039	86.02	ND	8.52	77.50	NA	NA
G4MW040	72.21	ND	7.72	64.49	NA	NA
G4MW041	84.24	ND	7.12	77.12	NA	NA
G4MW042	77.24	ND	9.21	68.03	NA	NA
G4MW043	72.58	ND	9.31	63.27	NA	NA
G4MW044	75.64	ND	11.55	64.09	NA	NA
G4MW045	75.44	ND	11.33	64.11	NA	NA
G4MW046	77.15	ND	5.85	71.30	NA	NA
G4MW047	77.09	ND	5.51	71.58	NA	NA
G4MW048	84.93	ND	12.75	72.18	NA	NA
G4MW049	84.86	ND	12.64	72.22	NA	NA
G4MW050	83.26	ND	6.31	76.95	NA	NA
G4MW051	84.02	ND	6.73	77.29	NA	NA
G4MW052	83.78	ND	7.99	75.79	NA	NA
G4MW053	74.78	ND	6.95	67.83	NA	NA
G4MW054	71.59	ND	7.87	63.72	NA	NA
22-07R	75.38	ND	5.16	70.22	NA	NA
22-08	75.79	ND	6.14	69.65	NA	NA

Notes:
*Water level compensated for the presence of Light Non-Aqueous Phase Liquids (LNAPL) if detected.
NA = Not Applicable.
ND = Not Detected.
NM = Not Measured.
amsl = above mean sea level.
btoc = below top of casing

Table 4-16
May 2011 Groundwater Analytical Data
SWMU 39
Fort Stewart, Georgia

		Location ID	G4MW048	G4MW049	G4MW050	G4MW051	G4MW052	G4MW053	G4MW054
		Sample Date	5/6/2011	5/4/2011	5/6/2011	5/6/2011	5/6/2011	5/6/2011	5/6/2011
Chemical Name	Tap Water RSL[1]	MCL[2]							
VOCs - USEPA Method SW8260 (µg/L)									
1,1,1-Trichloroethane	7500	200	< 1	< 1	< 1	< 1	< 1	< 1	< 1
1,1,2,2-Tetrachloroethane	0.066		< 1	< 1	< 1	< 1	< 1	< 1	< 1
1,1,2-Trichloroethane	0.24	5	< 1	< 1	< 1	< 1	< 1	< 1	< 1
1,1-Dichloroethane	2.4		< 1	< 1	< 1	< 1	**1.7**	< 1	< 1
1,1-Dichloroethene	260	7	< 1	< 1	< 1	**1.7**	**2.6**	< 1	< 1
1,2,4-Trichlorobenzene	0.99	70	< 1	< 1	< 1	< 1	< 1	< 1	< 1
1,2-Dichlorobenzene	280	600	< 1	< 1	< 1	< 1	< 1	< 1	< 1
1,2-Dichloroethane	0.15	5	< 1	< 1	< 1	< 1	< 1	< 1	< 1
1,2-Dichloropropane	0.38	5	< 1	< 1	< 1	< 1	< 1	< 1	< 1
1,3-Dichlorobenzene			< 1	< 1	< 1	< 1	< 1	< 1	< 1
1,4-Dichlorobenzene	0.42	75	< 1	< 1	< 1	< 1	< 1	< 1	< 1
2-Butanone	4900		< 10	< 10	< 10	**25**	< 10	< 10	< 10
2-Hexanone	34		< 10	< 10	< 10	< 10	< 10	< 10	< 10
4-Methyl-2-pentanone	1000		< 10	< 10	< 10	< 10	< 10	< 10	< 10
Acetone	12000		**240**	< 20	< 20	< 20	< 20	< 20	< 20
Benzene	0.39	5	**0.15 J**	< 1	< 1	**0.34 J**	< 1	< 1	< 1
Bromodichloromethane	0.12	80	< 1	< 1	< 1	< 1	< 1	< 1	< 1
Bromoform	7.9	80	< 1	< 1	< 1	< 1	< 1	< 1	< 1
Bromomethane	7		< 2	< 2	< 2	< 2	< 2	< 2	< 2
Carbon disulfide	720		< 1	**0.37 J**	< 1	**2**	< 1	**1.9**	**1**
Carbon tetrachloride	0.39	5	< 1	< 1	< 1	< 1	< 1	< 1	< 1
Chlorobenzene	72	100	< 2	< 2	< 2	< 2	< 2	< 2	< 2
Chloroethane	21000		< 2	< 2	< 2	< 2	< 2	< 2	< 2
Chloroform	0.19	80	< 1	< 1	< 1	< 1	< 1	< 1	< 1
Chloromethane	190		< 1	< 1	< 1	< 1	< 1	< 1	< 1
cis-1,2-Dichloroethene	28	70	**0.42 J**	< 1	< 1	**260**	**2.2**	< 1	< 1
cis-1,3-Dichloropropene			< 1	< 1	< 1	< 1	< 1	< 1	< 1
Dibromochloromethane	0.15	80	< 1	< 1	< 1	< 1	< 1	< 1	< 1
Ethylbenzene	1.3	700	< 1	< 1	< 1	< 1	< 1	< 1	< 1
Methylene chloride	9.9	5	< 1	< 1	< 1	< 1	< 1	< 1	< 1
Styrene	1100	100	< 1	< 1	< 1	< 1	< 1	< 1	< 1
tert-Butyl methyl ether	12		**1.1**	< 1	< 1	< 1	< 1	< 1	< 1
Tetrachloroethene	9.7	5	< 1	< 1	< 1	**2.2**	< 1	< 1	< 1
Toluene	860	1000	< 1	**0.96 J**	< 1	< 1	< 1	**0.84 J**	< 1
trans-1,2-Dichloroethene	86	100	< 1	< 1	< 1	**0.6**	< 1	< 1	< 1
trans-1,3-Dichloropropene			< 1	< 1	< 1	< 1	< 1	< 1	< 1
Trichloroethene	0.44	5	< 1	< 1	< 1	**380**	**5.3**	< 1	< 1
Vinyl chloride	0.015	2	**0.56 J**	< 1	< 1	< 1	< 1	< 1	< 1
Xylenes (total)	190	10000	< 1	< 1	< 1	< 1	< 1	< 1	< 1
SVOCs - U.S. EPA Method 8270 (µg/L)									
2,4,5-Trichlorophenol	890		< 1	< 1	< 1	< 1	< 1 UJ	< 1 UJ	< 1.1
2,4,6-Trichlorophenol	3.5		< 1	< 1	< 1	< 1	< 1 UJ	< 1 UJ	< 1.1
2,4-Dichlorophenol	35		< 1	< 1	< 1	< 1	< 1 UJ	< 1 UJ	< 1.1
2,4-Dimethylphenol	270		< 1	< 1	< 1	< 1	< 1 UJ	< 1 UJ	< 1.1
2,4-Dinitrophenol	30		< 5	< 5	< 5.1	< 5.1	< 5.1 UJ	< 5.2 UJ	< 5.6
2,4-Dinitrotoluene	0.2		< 2 R	< 2	< 2	< 2	< 2 R	< 2.1 R	< 2.2
2,6-Dinitrotoluene	15		< 2 R	< 2	< 2	< 2	< 2 R	< 2.1 R	< 2.2
2-Chloronaphthalene	550		< 1 R	< 1	< 1	< 1	< 1 R	< 1 R	< 1.1
2-Chlorophenol	71		< 1	< 1	< 1	< 1	< 1 UJ	< 1 UJ	< 1.1
2-Methyl-4,6-dinitrophenol	1.2		< 5	< 5	< 5.1	< 5.1	< 5.1 UJ	< 5.2 UJ	< 5.6
2-Methylnaphthalene	27		< 1 R	< 1	< 1	< 1	< 1 R	< 1 R	< 1.1
2-Methylphenol	720		< 1	< 1	< 1	< 1	< 1 UJ	< 1 UJ	< 1.1
2-Nitrobenzenamine	150		< 2 R	< 2	< 2	< 2	< 2 R	< 2.1 R	< 2.2
2-Nitrophenol			< 2	< 2	< 2	< 2	< 2 UJ	< 2.1 UJ	< 2.2
3,3'-Dichlorobenzidine	0.11		< 5 R	< 5	< 5.1	< 5.1	< 5.1 R	< 5.2 R	< 5.6
3-Nitrobenzenamine			< 2 R	< 2	< 2	< 2	< 2 R	< 2.1 R	< 2.2
4-Bromophenyl phenyl ether			< 1 R	< 1	< 1	< 1	< 1 R	< 1 R	< 1.1
4-Chloro-3-methylphenol	1100		< 1	< 1	< 1	< 1	< 1 UJ	< 1 UJ	< 1.1
4-Chlorobenzenamine	0.32		< 1 R	< 1	< 1	< 1	< 1 R	< 1 R	< 1.1
4-Chlorophenyl phenyl ether			< 1 R	< 1	< 1	< 1	< 1	< 1	< 1.1
4-Methylphenol	72		< 2	< 2	< 2	< 2	< 2 UJ	< 2.1 UJ	< 2.2
4-Nitrobenzenamine	3.3		< 2 R	< 2	< 2	< 2	< 2 R	< 2.1 R	< 2.2
4-Nitrophenol			< 5	< 5	< 5.1	< 5.1	< 5.1	< 5.2	< 5.6
Acenaphthene	400		< 1 R	< 1	< 1	< 1	< 1 R	< 1 R	< 1.1
Acenaphthylene			< 1 R	< 1	< 1	< 1	< 1 R	< 1 R	< 1.1
Anthracene	1300		< 1 R	< 1	< 1	< 1	< 1 R	< 1 R	< 1.1
Benz(a)anthracene	0.029		< 1 R	< 1	< 1	< 1	< 1 R	< 1 R	< 1.1
Benzo(a)pyrene	0.0029	0.2	< 1 R	< 1	< 1	< 1	< 1 R	< 1 R	< 1.1

Footnotes appear on last page.

Table 4-16
May 2011 Groundwater Analytical Data
SWMU 39
Fort Stewart, Georgia

		Location ID	G4MW048	G4MW049	G4MW050	G4MW051	G4MW052	G4MW053	G4MW054
		Sample Date	5/6/2011	5/4/2011	5/6/2011	5/6/2011	5/6/2011	5/6/2011	5/6/2011
Chemical Name	Tap Water RSL[1]	MCL[2]							
SVOCs - U.S. EPA Method 8270 (µg/L)									
Benzo(b)fluoranthene	0.029		< 1 R	< 1	< 1	< 1	< 1 R	< 1 R	< 1.1
Benzo(ghi)perylene			< 1 R	< 1	< 1	< 1	< 1 R	< 1 R	< 1.1
Benzo(k)fluoranthene	0.29		< 1	< 1	< 1	< 1	< 1 R	< 1 R	< 1.1
Bis(2-chloroethoxy)methane	46		< 1 R	< 1	< 1	< 1	< 1 R	< 1 R	< 1.1
Bis(2-chloroisopropyl) ether	0.31		< 1 R	< 1	< 1	< 1	**0.34 J**	**0.13 J**	< 1.1
Bis(2-ethylhexyl)phthalate	4.8	6	< 5 R	< 5	< 5.1	< 5.1	< 5.1 R	< 5.2 R	< 5.6
Butyl benzyl phthalate	14		< 5 R	< 5	< 5.1	< 5.1	< 5.1 R	< 5.2 R	< 5.6
Carbazole			< 1 R	< 1	< 1	< 1	< 1 R	< 1 R	< 1.1
Chrysene	2.9		< 1	< 1	< 1	< 1	< 1	< 1	< 1.1
Dibenz(a,h)anthracene	0.0029		< 1 R	< 1	< 1	< 1	< 1 R	< 1 R	< 1.1
Dibenzofuran	5.8		< 1 R	< 1	< 1	< 1	< 1 R	< 1 R	< 1.1
Diethyl phthalate	11000		< 5 R	< 5	< 5.1	< 5.1	< 5.1 R	< 5.2 R	< 5.6
Dimethyl phthalate			< 5 R	< 5	< 5.1	< 5.1	< 5.1 R	< 5.2 R	< 5.6
Di-n-butyl phthalate	670		< 5 R	< 5	< 5.1	< 5.1	< 5.1 R	< 5.2 R	< 5.6
Di-n-octylphthalate	190		< 5 R	< 5	< 5.1	< 5.1	< 5.1 R	< 5.2 R	< 5.6
Fluoranthene	630		< 1	< 1	< 1	< 1	< 1 R	< 1 R	< 1.1
Fluorene	220		< 1 R	< 1	< 1	< 1	< 1 R	< 1 R	< 1.1
Hexachlorobenzene	0.042	1	< 1 R	< 1	< 1	< 1	< 1 R	< 1 R	< 1.1
Hexachlorobutadiene	0.26		< 1 R	< 1	< 1	< 1	< 1 R	< 1 R	< 1.1
Hexachlorocyclopentadiene	22	50	< 5 R	< 5	< 5.1	< 5.1	< 5.1 R	< 5.2 R	< 5.6
Hexachloroethane	0.79		< 1 R	< 1	< 1	< 1	< 1 R	< 1 R	< 1.1
Indeno(1,2,3-cd)pyrene	0.029		< 1 R	< 1	< 1	< 1	< 1 R	< 1 R	< 1.1
Isophorone	67		< 1 R	< 1	< 1	< 1	< 1 R	< 1 R	< 1.1
Naphthalene	0.14		< 1 R	< 1	< 1	< 1	< 1 R	< 1 R	< 1.1
Nitrobenzene	0.12		< 1 R	< 1	< 1	< 1	< 1 R	< 1 R	< 1.1
N-Nitroso-di-n-propylamine	0.0093		< 1 R	< 1	< 1	< 1	< 1 R	< 1 R	< 1.1
N-Nitrosodiphenylamine	10		< 1 R	< 1	< 1	< 1	< 1 R	< 1 R	< 1.1
Pentachlorophenol	0.035	1	< 5	< 5	< 5.1	< 5.1	< 5.1 UJ	< 5.2 UJ	< 5.6
Phenanthrene			< 1 R	< 1	< 1	< 1	< 1 R	< 1 R	< 1.1
Phenol	4500		< 1	< 1	< 1	< 1	< 1 UJ	< 1 UJ	< 1.1
Pyrene	87		< 1 R	< 1	< 1	< 1	< 1 R	< 1 R	< 1.1
Dissolved Metals (mg/L)									
Arsenic	0.000045	0.01	< 0.01	< 0.01	**0.009 BJ**	**0.0098 J**	**0.0042 BJ**	**0.024 B**	**0.0047 BJ**
Barium	2.9	2	**0.025**	**0.033**	< 0.025	**0.045**	< 0.025	**0.019 J**	**0.037**
Cadmium	0.0069	0.005	< 0.002	< 0.002	< 0.002	< 0.002	< 0.002	< 0.002	< 0.002
Chromium		0.1	**0.0023 J**	< 0.005	< 0.005	**0.0036 J**	**0.0021 J**	**0.0026 J**	**0.0046 J**
Lead		0.015	< 0.01	< 0.01	**0.0019 J**	< 0.01	< 0.01	< 0.01	< 0.01
Selenium	0.078	0.05	0.0077 UB	0.0027 UB	0.0065 UB	0.0042 UB	< 0.01	0.0073 UB	0.0043 UB
Silver	0.071		< 0.005	< 0.005	< 0.005	< 0.005	< 0.005	< 0.005	< 0.005
Mercury	0.00063	0.002	< 0.0001	< 0.0001	< 0.0001	< 0.0001	**0.000059 J**	< 0.0001	< 0.0001
Total Metals (mg/L)									
Arsenic	0.000045	0.01	**0.0064 BJ**	< 0.01	**0.018 B**	**0.023 B**	**0.025 B**	**0.077 B**	**0.017 B**
Barium	2.9	2	**0.25**	**0.037**	**0.24**	**0.42**	**0.43**	**0.34**	**2.1**
Cadmium	0.0069	0.005	**0.00082 J**	< 0.002	**0.0014 J**	**0.0037**	**0.0014 J**	**0.0023**	< 0.002
Chromium		0.1	**0.0088**	**0.0045 J**	**0.048**	**0.13**	**0.15**	**0.24**	**0.14**
Lead		0.015	**0.048**	< 0.01	**0.024**	**0.034**	**0.045**	**0.088**	**0.25**
Selenium	0.078	0.05	0.0088 UB	0.0047 UB	0.0073 UB	0.0097 UB	0.012 UB	0.017 UB	0.017 UB
Silver	0.071		< 0.005	< 0.005	< 0.005	< 0.005	< 0.005	< 0.005	< 0.005
Mercury	0.00063	0.002	**0.0024**	< 0.0001	**0.000055 J**	**0.000056 J**	< 0.0001	**0.000069 J**	**0.0026**

Notes:

Detects are boldfaced

[1]	U.S. EPA Regional Screening Level for tap water as of November 2012
[2]	U.S. EPA Maximum Contaminant Level as of November 2012
	Exceedences of screening criteria are shaded gray
	Sample results were screened against the RSL. If no RSL was available, then the MCL was used.
B	Analyte detected in an associated blank.
J	Value is estimated
R	Data is rejected due to surrogate recovery.
U	Data is qualified as nondetect
µg/L	Micrograms per liter.

Table 4-17
August through October 2011 Water Levels
SWMU 39
Fort Stewart, Georgia

Monitoring Well ID	TOC Elevation (feet amsl)	Depth to Product (feet btoc)	Depth to Water (feet btoc)	Water Elevation (feet amsl) (Calculated)*	Product Elevation (feet amsl)	Product Thickness (feet)
G4MW-055	84.17	ND	14.91	69.26	NA	NA
G4MW-056	84.44	ND	8.23	76.21	NA	NA
G4MW-057	78.14	ND	10.30	67.84	NA	NA
G4MW-058	84.71	ND	7.92	76.79	NA	NA

Notes:
*Water level compensated for the presence of Light Non-Aqueous Phase Liquids (LNAPL) if detected.
NA = Not Applicable.
ND = Not Detected.
amsl = above mean sea level.
btoc = below top of casing

Table 4-18
August 2011 Groundwater Analytical Data
SWMU 39
Fort Stewart, Georgia

		Location ID	G4MW055	G4MW056	G4MW057
		Sample Date	8/30/2011	8/31/2011	8/30/2011
Chemical Name	Tap Water RSL[1]	MCL[2]			
VOCs - USEPA Method SW8260 (µg/L)					
1,1,1-Trichloroethane	7500	200	< 1	< 1	< 1
1,1,2,2-Tetrachloroethane	0.066		< 1	< 1	< 1
1,1,2-Trichloroethane	0.24	5	< 1	< 1	< 1
1,1-Dichloroethane	2.4		< 1	< 1	< 1
1,1-Dichloroethene	260	7	< 1	**0.21 J**	< 1
1,2,4-Trichlorobenzene	0.99	70	< 1	< 1	< 1
1,2-Dichlorobenzene	280	600	< 1	< 1	< 1
1,2-Dichloroethane	0.15	5	< 1	< 1	< 1
1,2-Dichloropropane	0.38	5	< 1	< 1	< 1
1,3-Dichlorobenzene			< 1	< 1	< 1
1,4-Dichlorobenzene	0.42	75	< 1	< 1	< 1
2-Butanone	4900		< 10	< 10	< 10
2-Hexanone	34		< 10	< 10	< 10
4-Methyl-2-pentanone	1000		< 10	< 10	< 10
Acetone	12000		**10 J**	< 20	< 20
Benzene	0.39	5	< 1	< 1	< 1
Bromodichloromethane	0.12	80	< 1	< 1	< 1
Bromoform	7.9	80	< 1	< 1	< 1
Bromomethane	7		< 2	< 2	< 2
Carbon disulfide	720		**0.54 J**	< 1	< 1
Carbon tetrachloride	0.39	5	< 1	< 1	< 1
Chlorobenzene	72	100	< 2	< 2	< 2
Chloroethane	21000		< 2	< 2	< 2
Chloroform	0.19	80	**0.72 J**	< 1	< 1
Chloromethane	190		< 1	< 1	< 1
cis-1,2-Dichloroethene	28	70	**0.13 J**	**5.8**	**3.2**
cis-1,3-Dichloropropene			< 1	< 1	< 1
Dibromochloromethane	0.15	80	< 1	< 1	< 1
Ethylbenzene	1.3	700	< 1	< 1	< 1
Methylene chloride	9.9	5	< 1	< 1	< 1
Styrene	1100	100	< 1	< 1	< 1
tert-Butyl methyl ether	12		< 1	< 1	< 1
Tetrachloroethene	9.7	5	**0.25 J**	**1**	**7.1**
Toluene	860	1000	< 1	< 1	< 1
trans-1,2-Dichloroethene	86	100	< 1	**0.29 J**	< 1
trans-1,3-Dichloropropene			< 1	< 1	< 1
Trichloroethene	0.44	5	**0.54 J**	**21**	**16**
Vinyl chloride	0.015	2	< 1	< 1	< 1
Xylenes (total)	190	10000	< 1	< 1	< 1

Notes:

Detects are boldfaced

[1] U.S. EPA Regional Screening Level for tap water as of November 2012

[2] U.S. EPA Maximum Contaminant Level as of November 2012

Exceedences of tap water RSL are shaded gray

Sample results were screened against the RSL. If no RSL was availabl then the MCL was used.

J Estimated Value

µg/L Micrograms per liter.

Table 4-19
October 2011 Groundwater Analytical Data
SWMU 39
Fort Stewart, Georgia

		Location ID Sample Date	G4MW058 10/25/2011
Chemical Name	Tap Water RSL[1]	MCL[2]	
VOCs - USEPA Method SW8260 (µg/L)			
1,1,1-Trichloroethane	7500	200	< 1
1,1,2,2-Tetrachloroethane	0.066		< 1
1,1,2-Trichloroethane	0.24	5	< 1
1,1-Dichloroethane	2.4		< 1
1,1-Dichloroethene	260	7	< 1
1,2,4-Trichlorobenzene	0.99	70	< 1
1,2-Dichlorobenzene	280	600	< 1
1,2-Dichloroethane	0.15	5	< 1
1,2-Dichloropropane	0.38	5	< 1
1,3-Dichlorobenzene			< 1
1,4-Dichlorobenzene	0.42	75	< 1
2-Butanone	4900		**15**
2-Hexanone	34		< 10
4-Methyl-2-pentanone	1000		< 10
Acetone	12000		< 20
Benzene	0.39	5	< 1
Bromodichloromethane	0.12	80	< 1
Bromoform	7.9	80	< 1
Bromomethane	7		< 2
Carbon disulfide	720		0.34 UB
Carbon tetrachloride	0.39	5	< 1
Chlorobenzene	72	100	< 2
Chloroethane	21000		< 2
Chloroform	0.19	80	< 1
Chloromethane	190		< 1
cis-1,2-Dichloroethene	28	70	< 1
cis-1,3-Dichloropropene			< 1
Dibromochloromethane	0.15	80	< 1
Ethylbenzene	1.3	700	< 1
Methylene chloride	9.9	5	< 1
Styrene	1100	100	< 1
tert-Butyl methyl ether	12		< 1
Tetrachloroethene	9.7	5	< 1
Toluene	860	1000	**0.47 J**
trans-1,2-Dichloroethene	86	100	< 1
trans-1,3-Dichloropropene			< 1
Trichloroethene	0.44	5	< 1
Vinyl chloride	0.015	2	< 1
Xylenes (total)	190	10000	< 1

Notes:

Detects are boldfaced

[1] U.S. EPA Regional Screening Level for tap water as of November 2012

[2] U.S. EPA Maximum Contaminant Level of November 2012

Exceedences of tap water RSL are shaded gray

Sample results were screened against the RSL. If no RSL was available, then the MCL was used

J : Estimated Value

UB : Qulified as Non-detect due to blank contamination

µg/L : Micrograms per liter.

Table 6-1
Selection of Constituents of Potential Concern for Surface Soil (0-1 feet)
SWMU 39
Fort Stewart, Georgia

Constituent [a]	Frequency of Detection (FOD) [b] Number of Detects		Number of Samples	(%)	Detection Limits Min (mg/kg)	-	Max (mg/kg)	Detected Concentrations Min (mg/kg)	-	Max (mg/kg)	Location of Maximum Concentration (Sample Depth)	USEPA Residential Soil Regional Screening Level [c] (mg/kg)		Is Constituent a COPC? [d] (YES, no)	Rationale
Volatile Organic Compounds															
Acetone	3	-	4	75	2.10E-02	-	2.10E-02	1.50E-02	-	2.40E-02	F39SB011(0.5-1)	6.10E+03	n	no	BSL
Semi Volatile Organic Compounds															
Acenaphthene	1	-	10	10	6.90E-02	-	7.80E-02	2.00E-02	-	2.00E-02	FS39SB013(0.5-1)	3.40E+02	n	no	BSL
Acenaphthylene	4	-	10	40	6.90E-02	-	7.80E-02	2.90E-02	-	4.00E-01	F39SB010(0.5-1)	NA		**YES**	NSL
Anthracene	4	-	10	40	6.90E-02	-	7.80E-02	1.50E-02	-	2.50E-01	F39SB010(0.5-1)	1.70E+03	n	no	BSL
Benz(a)anthracene	4	-	10	40	6.90E-02	-	7.80E-02	7.00E-02	-	5.00E-01	F39SB010(0.5-1)	1.50E-01	c	**YES**	ASL
Benzo(a)pyrene	5	-	10	50	6.90E-02	-	7.80E-02	1.10E-02	-	8.20E-01	F39SB010(0.5-1)	1.50E-02	c	**YES**	ASL
Benzo(b)fluoranthene	5	-	10	50	6.90E-02	-	7.80E-02	1.50E-02	-	1.10E+00	F39SB010(0.5-1)	1.50E-01	c	**YES**	ASL
Benzo(g,h,i)perylene	4	-	10	40	6.90E-02	-	7.80E-02	4.10E-02	-	4.80E-01	F39SB010(0.5-1)	NA		**YES**	NSL
Benzo(k)fluoranthene	4	-	10	40	6.90E-02	-	7.80E-02	4.60E-02	-	3.80E-01	F39SB010(0.5-1)	1.50E+00	c	no	BSL
1,1'-Biphenyl	1	-	10	10	6.90E-02	-	7.80E-02	1.20E-02	-	1.20E-02	F39SB017(0.5-1)	5.10E+00	n	no	BSL
4-Chlorobenzenamine	2	-	10	20	6.90E-02	-	7.80E-02	1.50E-02	-	6.80E-02	F39SB015(0-0.5)	2.40E+00	c	no	BSL
Chrysene	4	-	10	40	6.90E-02	-	7.80E-02	9.40E-02	-	5.70E-01	F39SB010(0.5-1)	1.50E+01	c	no	BSL
Dibenz(a,h)anthracene	3	-	10	30	6.90E-02	-	7.80E-02	1.20E-02	-	6.80E-02	FS39SB013(0.5-1)	1.50E-02	c	**YES**	ASL
Di-n-octylphthalate	1	-	10	10	6.90E-02	-	7.80E-02	3.90E-02	-	3.90E-02	F39SB010(0.5-1)	6.10E+01	n	no	BSL
Fluoranthene	5	-	10	50	6.90E-02	-	7.80E-02	1.30E-02	-	2.80E-01	F39SB010(0.5-1)	2.30E+02	n	no	BSL
Fluorene	1	-	10	10	6.90E-02	-	7.80E-02	1.10E-01	-	1.10E-01	FS39SB013(0.5-1)	2.30E+02	n	no	BSL
Indeno(1,2,3-cd)pyrene	4	-	10	40	6.90E-02	-	7.80E-02	3.60E-02	-	4.20E-01	F39SB010(0.5-1)	1.50E-01	c	**YES**	ASL
2-Methylnaphthalene	1	-	10	10	6.90E-02	-	7.80E-02	1.50E-02	-	1.50E-02	F39SB017(0-0.5)	2.30E+01	n	no	BSL
Phenanthrene	3	-	10	30	6.90E-02	-	7.80E-02	2.30E-02	-	2.10E-01	FS39SB013(0.5-1)	NA		**YES**	NSL
Pyrene	5	-	10	50	6.90E-02	-	7.80E-02	1.90E-02	-	6.40E-01	F39SB010(0.5-1)	1.70E+02	n	no	BSL
Inorganics															
Arsenic	1	-	4	25	5.00E-01	-	5.60E-01	5.60E-01	-	5.60E-01	F39SB009(0.5-1)	6.10E-01	c*R	no	BSL
Barium	4	-	4	100	–	-	–	1.10E+00	-	1.00E+01	F39SB009(0.5-1)	1.50E+03	n	no	BSL
Cadmium	1	-	4	25	1.40E-02	-	5.40E-02	3.60E-01	-	3.60E-01	F39SB009(0.5-1)	7.00E+00	n	no	BSL
Chromium	3	-	4	75	3.80E-01	-	3.80E-01	2.70E+00	-	5.90E+00	F39SB009(0.5-1)	2.90E-01	c	**YES**	ASL
Lead	4	-	4	100	–	-	–	8.10E-01	-	4.30E+01	F39SB009(0.5-1)	4.00E+02	L	no	BSL
Mercury	3	-	4	75	8.60E-02	-	8.60E-02	1.50E-02	-	3.00E-02	F39SB010(0.5-1)	1.00E+00	ns	no	BSL

–	Not applicable.	COPC	Constituent of Potential Concern.	R	Relative bioavailability factor applied.
ASL	Above screening level.	L	Lead.	s	Screening concentration may exceed the saturated concentration (Csat).
BSL	Below screening level.	mg/kg	Milligrams per kilogram.		
c*	The noncancer screening level is less than 100 times the cancer screening level.	n	Noncancer.	USEPA	United States Environmental Protection Agency.
		NA	Not available.		
c	Cancer.	NSL	No screening level.		

[a] Only constituents detected at least once are presented. For duplicate samples, the highest detected value or the lowest detection limit was used. Elemental mercury was used conservatively in the screening.

[b] Frequency of detection (FOD) is equal to the number of detects divided by the total number of samples analyzed.

[c] The USEPA Residential Soil Regional Screening Levels (RSLs) were used (USEPA 2013e). RSLs based on noncancer values were adjusted to a target hazard of 0.1 to account for cumulative effects with the exception of lead.

[d] Constituents detected with maximum concentrations above USEPA Residential Soil RSL are considered a COPC. Constituents with a maximum concentration below the screening levels (BSL) are not considered a COPC. Constituents with no screening level (NSL) are considered a COPC.

Table 6-2
Selection of Constituents of Potential Concern for Subsurface Soil (1-8 feet)
SWMU 39
Fort Stewart, Georgia

Constituent [a]	Frequency of Detection (FOD) [b]				Detection Limits			Detected Concentrations			Location of Maximum Concentration (Sample Depth)	USEPA Residential Soil Regional Screening Level [c]		Is Constituent a COPC? [d]		Is Constituent a COPC for Vapor Inhalation? [e]
	Number of Detects		Number of Samples	(%)	Min (mg/kg)	-	Max (mg/kg)	Min (mg/kg)	-	Max (mg/kg)		(mg/kg)		(YES, no)	Rationale	(YES, no)
Volatile Organic Compounds																
Acetone	15	-	24	63	1.50E-02	-	7.20E-02	1.20E-02	-	1.10E-01	F39G4MW023(4-6)(8/27/2004)	6.10E+03	n	no	BSL	**YES**
Benzene	4	-	24	17	4.20E-03	-	7.20E-03	4.80E-04	-	9.10E-04	F39G4MW020(4-8) (4/15/2004)	1.10E+00	c*	no	BSL	**YES**
Benzene,1-methylethyl	2	-	24	8	4.10E-03	-	7.20E-03	8.10E-04	-	1.30E-03	F39G4MW014(4-8)(4/14/2004)	2.10E+02	ns	no	BSL	**YES**
Carbon disulfide	1	-	24	4	4.10E-03	-	7.20E-03	1.30E-03	-	1.30E-03	F39G4MW014(4-8)(4/14/2004)	8.20E+01	ns	no	BSL	**YES**
1,2-Dibromoethane	1	-	24	4	4.10E-03	-	7.20E-03	4.30E-04	-	4.30E-04	F39G4MW014(4-8)(4/14/2004)	3.40E-02	c	no	BSL	**YES**
cis-1,2-Dichloroethene	2	-	24	8	4.10E-03	-	7.20E-03	7.10E-04	-	1.60E-03	F39G4MW021(4-8)	1.60E+01	n	no	BSL	**YES**
Ethylbenzene	2	-	24	8	4.20E-03	-	7.20E-03	9.00E-04	-	6.80E-03	F39G4MW014(4-8)(4/14/2004)	5.40E+00	c	no	BSL	**YES**
Methylcyclohexane	1	-	24	4	4.10E-03	-	7.20E-03	1.00E-03	-	1.00E-03	F39SB007 (4-5)(3/15/2010)	NA		**YES**	NSL	**YES**
4-Methyl-2-pentanone	3	-	24	13	8.40E-03	-	3.60E-02	1.00E-03	-	1.80E-03	F39G4MW020(4-8) (4/15/2004)	5.30E+02	ns	no	BSL	**YES**
Toluene	2	-	24	8	4.10E-03	-	7.20E-03	8.10E-03	-	1.10E-02	F39G4MW022(4-6)	5.00E+02	ns	no	BSL	**YES**
Trichloroethene	1	-	24	4	4.10E-03	-	7.20E-03	3.00E-03	-	3.00E-03	F39G4MW014(4-8)(4/14/2004)	4.40E-01	n	no	BSL	**YES**
Xylenes (total)	5	-	24	21	4.20E-03	-	1.50E-02	2.30E-03	-	5.50E-02	F39G4MW014(4-8)(4/14/2004)	6.30E+01	ns	no	BSL	**YES**
Semi Volatile Organic Compounds																
Acenaphthylene	4	-	18	22	7.00E-02	-	1.50E-01	2.90E-02	-	2.00E-01	F39SB017(3-3.5)(5/19/2011),F39-SB-013(3.0-3.5)(4/27/2011)	NA		**YES**	NSL	**YES**
Anthracene	3	-	18	17	7.00E-02	-	1.50E-01	3.50E-02	-	8.90E-02	F39-SB-013(3.0-3.5)(4/27/2011)	1.70E+03	n	no	BSL	**YES**
Benz(a)anthracene	4	-	18	22	7.00E-02	-	1.50E-01	3.80E-02	-	4.30E-01	F39-SB-013(3.0-3.5)(4/27/2011)	1.50E-01	c	**YES**	ASL	no
Benzaldehyde	2	-	18	11	7.00E-02	-	1.50E-01	9.70E-02	-	1.30E-01	F39SB006 (4-5)(3/15/2010)	7.80E+02	ns	no	BSL	**YES**
Benzo(a)pyrene	4	-	18	22	7.00E-02	-	1.50E-01	1.30E-02	-	6.80E-01	F39-SB-013(3.0-3.5)(4/27/2011)	1.50E-02	c	**YES**	ASL	no
Benzo(b)fluoranthene	5	-	18	28	7.00E-02	-	1.50E-01	1.40E-02	-	7.90E-01	F39-SB-013(3.0-3.5)(4/27/2011)	1.50E-01	c	**YES**	ASL	no
Benzo(g,h,i)perylene	3	-	18	17	7.00E-02	-	1.50E-01	6.20E-02	-	3.70E-01	F39-SB-013(3.0-3.5)(4/27/2011)	NA		**YES**	NSL	no
Benzo(k)fluoranthene	5	-	18	28	7.00E-02	-	1.50E-01	1.10E-02	-	4.40E-01	F39-SB-013(3.0-3.5)(4/27/2011)	1.50E+00	c	no	BSL	no
4-Chlorobenzenamine	1	-	18	6	7.00E-02	-	1.50E-01	2.30E-02	-	2.30E-02	F39SB015(3-3.5)(5/19/2011)	2.40E+00	c	no	BSL	no
Chrysene	4	-	18	22	7.00E-02	-	1.50E-01	4.40E-02	-	5.70E-01	F39-SB-013(3.0-3.5)(4/27/2011)	1.50E+01	c	no	BSL	no
Dibenz(a,h)anthracene	2	-	18	11	7.00E-02	-	1.50E-01	5.00E-02	-	1.00E-01	F39-SB-013(3.0-3.5)(4/27/2011)	1.50E-02	c	**YES**	ASL	no
Fluoranthene	4	-	18	22	7.00E-02	-	1.50E-01	2.10E-02	-	2.30E-01	F39-SB-013(3.0-3.5)(4/27/2011)	2.30E+02	n	no	BSL	no
Fluorene	1	-	18	6	7.00E-02	-	1.50E-01	1.10E-02	-	1.10E-02	F39-SB-013(3.0-3.5)(4/27/2011)	2.30E+02	n	no	BSL	**YES**
Indeno(1,2,3-cd)pyrene	3	-	18	17	7.00E-02	-	1.50E-01	4.20E-02	-	3.30E-01	F39-SB-013(3.0-3.5)(4/27/2011)	1.50E-01	c	**YES**	ASL	no
2-Methylnaphthalene	2	-	18	11	7.00E-02	-	1.50E-01	1.80E-02	-	5.50E-02	F39SB007 (4-5)(3/15/2010)	2.30E+01	n	no	BSL	**YES**
Naphthalene	1	-	18	6	7.00E-02	-	1.50E-01	1.10E-02	-	1.10E-02	F39SB017(3-3.5)(5/19/2011)	3.60E+00	c*	no	BSL	**YES**
Phenanthrene	2	-	18	11	7.00E-02	-	1.50E-01	3.10E-02	-	6.70E-02	F39SB007 (4-5)(3/15/2010)	NA		**YES**	NSL	**YES**
Pyrene	4	-	18	22	7.00E-02	-	1.50E-01	4.60E-02	-	6.10E-01	F39-SB-013(3.0-3.5)(4/27/2011)	1.70E+02	n	no	BSL	**YES**

See footnotes on the last page.

Table 6-2
Selection of Constituents of Potential Concern for Subsurface Soil (1-8 feet)
SWMU 39
Fort Stewart, Georgia

Constituent [a]	Frequency of Detection (FOD) [b]				Detection Limits			Detected Concentrations			Location of Maximum Concentration (Sample Depth)	USEPA Residential Soil Regional Screening Level [c]		Is Constituent a COPC? [d]		Is Constituent a COPC for Vapor Inhalation? [e]
	Number of Detects		Number of Samples	(%)	Min (mg/kg)	-	Max (mg/kg)	Min (mg/kg)	-	Max (mg/kg)		(mg/kg)		(YES, no)	Rationale	(YES, no)
Inorganics																
Arsenic	7	-	12	58	5.00E-01	-	5.70E-01	3.00E-01	-	7.00E-01	F39SB009 (3.0-3.5)(3/15/2010)	6.10E-01	c*R	**YES**	ASL	no
Barium	12	-	12	100	–	-	–	2.20E+00	-	1.90E+01	F39SB012 (3.0-3.5)(3/16/2010)	1.50E+03	n	no	BSL	no
Chromium	12	-	12	100	–	-	–	1.00E+00	-	7.80E+00	F39SB012 (3.0-3.5)(3/16/2010)	2.90E-01	c	**YES**	ASL	no
Lead	12	-	12	100	–	-	–	1.50E+00	-	1.00E+01	F39SB007 (4-5)(3/15/2010)	4.00E+02	L	no	BSL	no
Mercury	10	-	12	83	8.70E-02	-	9.40E-02	9.90E-03	-	9.60E-02	F39SB012 (3.0-3.5)(3/16/2010)	1.00E+00	ns	no	BSL	**YES**

–	Not applicable.	COPC	Constituent of Potential Concern.	R	Relative bioavailability factor applied.
ASL	Above screening level.	L	Lead.	s	Screening concentration may exceed the saturated concentration (Csat).
BSL	Below screening level.	mg/kg	Milligrams per kilogram.		
c*	The noncancer screening level is less than 100 times the cancer screening level.	n	Noncancer.	USEPA	United States Environmental Protection Agency.
		NA	Not available.		
c	Cancer.	NSL	No screening level.		

[a] Only constituents detected at least once are presented. For duplicate samples, the highest detected value or the lowest detection limit was used. Elemental mercury was used conservatively in the screening.

[b] Frequency of detection (FOD) is equal to the number of detects divided by the total number of samples analyzed.

[c] The USEPA Residential Soil Regional Screening Levels (RSLs) were used (USEPA 2013e). RSLs based on noncancer values were adjusted to a target hazard of 0.1 to account for cumulative effects with the exception of lead.

[d] Constituents detected with maximum concentrations above USEPA Residential Soil RSL are considered a COPC. Constituents with a maximum concentration below the screening levels (BSL) are not considered a COPC. Constituents with no screening level (NSL) are considered a COPC.

[e] Constituents with molecular weights less than or equal to 200 grams per mole and a Henry's Law Constant equal to or greater than $1x10^{-5}$ atm-m³/mol are considered volatile.

Table 6-3
Selection of Constituents of Potential Concern for Soil (0-8 feet)
SWMU 39
Fort Stewart, Georgia

Constituent [a]	Frequency of Detection (FOD) [b]				Detection Limits			Detected Concentrations			Location of Maximum Concentration (Sample Depth)	USEPA Residential Soil Regional Screening Level [c]		Is Constituent a COPC? [d]	
	Number of Detects		Number of Samples	(%)	Min (mg/kg)	-	Max (mg/kg)	Min (mg/kg)	-	Max (mg/kg)		(mg/kg)		(YES, no)	Rationale
Volatile Organic Compounds															
Acetone	18	-	28	64	1.50E-02	-	7.20E-02	1.20E-02	-	1.10E-01	F39G4MW023(4-6)	6.10E+03	n	no	BSL
Benzene	4	-	28	14	4.20E-03	-	7.20E-03	4.80E-04	-	9.10E-04	F39G4MW020(4-8)	1.10E+00	c*	no	BSL
Benzene,1-methylethyl	2	-	28	7	4.10E-03	-	7.20E-03	8.10E-04	-	1.30E-03	F39G4MW014(4-8)	2.10E+02	ns	no	BSL
Carbon disulfide	1	-	28	4	4.10E-03	-	7.20E-03	1.30E-03	-	1.30E-03	F39G4MW014(4-8)	8.20E+01	ns	no	BSL
1,2-Dibromoethane	1	-	28	4	4.10E-03	-	7.20E-03	4.30E-04	-	4.30E-04	F39G4MW014(4-8)	3.40E-02	c	no	BSL
cis-1,2-Dichloroethene	2	-	28	7	4.10E-03	-	7.20E-03	7.10E-04	-	1.60E-03	F39G4MW021(4-8)	1.60E+01	n	no	BSL
Ethylbenzene	2	-	28	7	4.20E-03	-	7.20E-03	9.00E-04	-	6.80E-03	F39G4MW014(4-8)	5.40E+00	c	no	BSL
Methylcyclohexane	1	-	28	4	4.10E-03	-	7.20E-03	1.00E-03	-	1.00E-03	F39SB007 (4-5)	NA		**YES**	NSL
4-Methyl-2-pentanone	3	-	28	11	8.40E-03	-	3.60E-02	1.00E-03	-	1.80E-03	F39G4MW020(4-8)	5.30E+02	ns	no	BSL
Toluene	2	-	28	7	4.10E-03	-	7.20E-03	8.10E-03	-	1.10E-02	F39G4MW022(4-6)	5.00E+02	ns	no	BSL
Trichloroethene	1	-	28	4	4.10E-03	-	7.20E-03	3.00E-03	-	3.00E-03	F39G4MW014(4-8)	4.40E-01	n	no	BSL
Xylenes (total)	5	-	28	18	4.20E-03	-	1.50E-02	2.30E-03	-	5.50E-02	F39G4MW014(4-8)	6.30E+01	ns	no	BSL
Semi Volatile Organic Compounds															
Acenaphthene	1	-	28	4	6.90E-02	-	1.50E-01	2.00E-02	-	2.00E-02	F39-SB-013(0.5-1)	3.40E+02	n	no	BSL
Acenaphthylene	8	-	28	29	6.90E-02	-	1.50E-01	2.90E-02	-	4.00E-01	F39SB010 (0.5-1)	NA		**YES**	NSL
Anthracene	7	-	28	25	6.90E-02	-	1.50E-01	1.50E-02	-	2.50E-01	F39SB010 (0.5-1)	1.70E+03	n	no	BSL
Benz(a)anthracene	8	-	28	29	6.90E-02	-	1.50E-01	3.80E-02	-	5.00E-01	F39SB010 (0.5-1)	1.50E-01	c	**YES**	ASL
Benzaldehyde	2	-	28	7	6.90E-02	-	1.50E-01	9.70E-02	-	1.30E-01	F39SB006 (4-5)	7.80E+02	ns	no	BSL
Benzo(a)pyrene	9	-	28	32	6.90E-02	-	1.50E-01	1.10E-02	-	8.20E-01	F39SB010 (0.5-1)	1.50E-02	c	**YES**	ASL
Benzo(b)fluoranthene	10	-	28	36	6.90E-02	-	1.50E-01	1.40E-02	-	1.10E+00	F39SB010 (0.5-1)	1.50E-01	c	**YES**	ASL
Benzo(g,h,i)perylene	7	-	28	25	6.90E-02	-	1.50E-01	4.10E-02	-	4.80E-01	F39SB010 (0.5-1)	NA		**YES**	NSL
Benzo(k)fluoranthene	9	-	28	32	6.90E-02	-	1.50E-01	1.10E-02	-	4.40E-01	F39-SB-013(3.0-3.5)	1.50E+00	c	no	BSL
1,1'-Biphenyl	1	-	28	4	6.90E-02	-	1.50E-01	1.20E-02	-	1.20E-02	F39SB017(0-0.5)	5.10E+00	n	no	BSL
4-Chlorobenzenamine	3	-	28	11	6.90E-02	-	1.50E-01	1.50E-02	-	6.80E-02	F39SB015(0-0.5)	2.40E+00	c	no	BSL
Chrysene	8	-	28	29	6.90E-02	-	1.50E-01	4.40E-02	-	5.70E-01	F39SB010 (0.5-1),F39-SB-013(3.0-3.5)	1.50E+01	c	no	BSL
Dibenz(a,h)anthracene	5	-	28	18	6.90E-02	-	1.50E-01	1.20E-02	-	1.00E-01	F39-SB-013(3.0-3.5)	1.50E-02	c	**YES**	ASL
Di-n-octylphthalate	1	-	28	4	6.90E-02	-	1.50E-01	3.90E-02	-	3.90E-02	F39SB010 (0.5-1)	6.10E+01	n	no	BSL
Fluoranthene	9	-	28	32	6.90E-02	-	1.50E-01	1.30E-02	-	2.80E-01	F39SB010 (0.5-1)	2.30E+02	n	no	BSL
Fluorene	2	-	28	7	6.90E-02	-	1.50E-01	1.10E-02	-	1.10E-01	F39-SB-013(0.5-1)	2.30E+02	n	no	BSL
Indeno(1,2,3-cd)pyrene	7	-	28	25	6.90E-02	-	1.50E-01	3.60E-02	-	4.20E-01	F39SB010 (0.5-1)	1.50E-01	c	**YES**	ASL
2-Methylnaphthalene	3	-	28	11	6.90E-02	-	1.50E-01	1.50E-02	-	5.50E-02	F39SB007 (4-5)	2.30E+01	n	no	BSL
Naphthalene	1	-	28	4	6.90E-02	-	1.50E-01	1.10E-02	-	1.10E-02	F39SB017(3-3.5)	3.60E+00	c*	no	BSL
Phenanthrene	5	-	28	18	6.90E-02	-	1.50E-01	2.30E-02	-	2.10E-01	F39-SB-013(0.5-1)	NA		**YES**	NSL
Pyrene	9	-	28	32	6.90E-02	-	1.50E-01	1.90E-02	-	6.40E-01	F39SB010 (0.5-1)	1.70E+02	n	no	BSL

See footnotes on the last page.

Table 6-3
Selection of Constituents of Potential Concern for Soil (0-8 feet)
SWMU 39
Fort Stewart, Georgia

Constituent [a]	Frequency of Detection (FOD) [b]				Detection Limits			Detected Concentrations			Location of Maximum Concentration (Sample Depth)	USEPA Residential Soil Regional Screening Level [c]		Is Constituent a COPC? [d]	
	Number of Detects		Number of Samples	(%)	Min (mg/kg)	-	Max (mg/kg)	Min (mg/kg)	-	Max (mg/kg)		(mg/kg)		(YES, no)	Rationale
Inorganics															
Arsenic	8	-	16	50	5.00E-01	-	5.70E-01	3.00E-01	-	7.00E-01	F39SB009 (3.0-3.5)	6.10E-01	c*R	**YES**	ASL
Barium	16	-	16	100	–	-	–	1.10E+00	-	1.90E+01	F39SB012 (3.0-3.5)	1.50E+03	n	no	BSL
Cadmium	1	-	16	6	1.40E-02	-	1.00E-01	3.60E-01	-	3.60E-01	F39SB009 (0.5-1)	7.00E+00	n	no	BSL
Chromium	15	-	16	94	3.80E-01	-	3.80E-01	1.00E+00	-	7.80E+00	F39SB012 (3.0-3.5)	2.90E-01	c	**YES**	ASL
Lead	16	-	16	100	–	-	–	8.10E-01	-	4.30E+01	F39SB009 (0.5-1)	4.00E+02	L	no	BSL
Mercury	13	-	16	81	8.60E-02	-	9.40E-02	9.90E-03	-	9.60E-02	F39SB012 (3.0-3.5)	1.00E+00	ns	no	BSL

–	Not applicable.	COPC	Constituent of Potential Concern.	R	Relative bioavailability factor applied.
ASL	Above screening level.	L	Lead.	s	Screening concentration may exceed the saturated concentration (Csat).
BSL	Below screening level.	mg/kg	Milligrams per kilogram.		
c*	The noncancer screening level is less than 100 times the cancer screening level.	n	Noncancer.	USEPA	United States Environmental Protection Agency.
		NA	Not available.		
c	Cancer.	NSL	No screening level.		

[a] Only constituents detected at least once are presented. For duplicate samples, the highest detected value or the lowest detection limit was used. Elemental mercury was used conservatively in the screening.

[b] Frequency of detection (FOD) is equal to the number of detects divided by the total number of samples analyzed.

[c] The USEPA Residential Soil Regional Screening Levels (RSLs) were used (USEPA 2013e). RSLs based on noncancer values were adjusted to a target hazard of 0.1 to account for cumulative effects with the exception of lead.

[d] Constituents detected with maximum concentrations above USEPA Residential Soil RSL are considered a COPC. Constituents with a maximum concentration below the screening levels (BSL) are not considered a COPC. Constituents with no screening level (NSL) are considered a COPC.

[e] Constituents with molecular weights less than or equal to 200 grams per mole and a Henry's Law Constant equal to or greater than $1x10^{-5}$ atm-m³/mol are considered volatile.

Table 6-4
Selection of Constituents of Potential Concern for Sediment
SWMU 39
Fort Stewart, Georgia

Constituent [a]	Frequency of Detection (FOD) [b]				Detection Limits			Detected Concentrations			Location of Maximum Concentration (Sample Date)	USEPA Residential Soil Regional Screening Level [c]		Is Constituent a COPC? [d]	
	Number of Detects		Number of Samples	(%)	Min (mg/kg)	-	Max (mg/kg)	Min (mg/kg)	-	Max (mg/kg)		(mg/kg)		(YES, no)	Rationale
Volatile Organic Compounds															
Acetone	6	-	8	75	3.80E-02	-	1.20E-01	2.00E-02	-	1.30E-01	F39SED007(4/8/2010)	6.10E+03	n	no	BSL
cis-1,2-Dichloroethene	3	-	8	38	5.00E-03	-	3.10E-02	1.50E-03	-	3.00E-03	F39SED005(4/8/2010)	1.60E+01	n	no	BSL
Tetrachloroethene	2	-	8	25	4.80E-03	-	3.10E-02	1.10E-02	-	1.90E-02	F39SED005(4/8/2010)	8.60E+00	n	no	BSL
Trichloroethene	5	-	8	63	5.00E-03	-	3.10E-02	2.90E-03	-	3.80E-02	F39SED005(4/8/2010)	4.40E-01	n	no	BSL
Semi Volatile Organic Compounds															
Benzaldehyde	1	-	8	13	8.30E-02	-	9.30E-02	6.10E-01	-	6.10E-01	F39SED008(4/8/2010)	7.80E+02	ns	no	BSL
Benzo(b)fluoranthene	1	-	8	13	8.30E-02	-	9.30E-02	1.40E-01	-	1.40E-01	F39SED008(4/8/2010)	1.50E-01	c	no	BSL
Bis(2-ethylhexyl)phthalate	1	-	8	13	8.30E-02	-	1.10E-01	9.30E-02	-	9.30E-02	F39SED002(4/8/2010)	3.50E+01	c*	no	BSL
2-Methylnaphthalene	1	-	8	13	8.30E-02	-	9.30E-02	1.40E-01	-	1.40E-01	F39SED008(4/8/2010)	2.30E+01	n	no	BSL
4-Methylphenol	1	-	8	13	1.60E-01	-	2.10E-01	1.60E-01	-	1.60E-01	F39SED002(4/8/2010)	6.10E+02	n	no	BSL
Phenanthrene	1	-	8	13	8.30E-02	-	9.30E-02	1.40E-01	-	1.40E-01	F39SED008(4/8/2010)	NA		**YES**	NSL
Inorganics															
Arsenic	8	-	8	100	–	-	–	5.00E-01	-	1.70E+01	F39SED008(4/8/2010)	6.10E-01	c*R	**YES**	ASL
Barium	8	-	8	100	–	-	–	8.00E-01	-	1.60E+01	F39SED008(4/8/2010)	1.50E+03	n	no	BSL
Cadmium	2	-	8	25	3.30E-02	-	1.10E-01	1.40E-01	-	6.00E-01	F39SED008(4/8/2010)	7.00E+00	n	no	BSL
Chromium	8	-	8	100	–	-	–	8.50E-01	-	6.30E+00	F39SED003(4/8/2010)	2.90E-01	c	**YES**	ASL
Lead	8	-	8	100	–	-	–	6.40E-01	-	9.30E+00	F39SED003(4/8/2010)	4.00E+02	L	no	BSL
Mercury	3	-	8	38	9.50E-02	-	1.10E-01	9.80E-03	-	6.20E-02	F39SED003(4/8/2010)	1.00E+00	ns	no	BSL

–	Not applicable.	COPC	Constituent of Potential Concern.	R	Relative bioavailability factor applied.
ASL	Above screening level.	L	Lead.	s	Screening concentration may exceed the saturated concentration (Csat).
BSL	Below screening level.	mg/kg	Milligrams per kilogram.		
c*	The noncancer screening level is less than 100 times the cancer screening level.	n	Noncancer.	USEPA	United States Environmental Protection Agency.
		NA	Not available.		
c	Cancer.	NSL	No screening level.		

[a] Only constituents detected at least once are presented. For duplicate samples, the highest detected value or the lowest detection limit was used. Elemental mercury was used conservatively in the screening.

[b] Frequency of detection (FOD) is equal to the number of detects divided by the total number of samples analyzed.

[c] The USEPA Residential Soil Regional Screening Levels (RSLs) were used (USEPA 2013e). RSLs based on noncancer values were adjusted to a target hazard of 0.1 to account for cumulative effects with the exception of lead.

[d] Constituents detected with maximum concentrations above USEPA Residential Soil RSL are considered a COPC. Constituents with a maximum concentration below the screening levels (BSL) are not considered a COPC.

Table 6-5
Selection of Constituents of Potential Concern for Surface Water
SWMU 39
Fort Stewart, Georgia

Constituent [a]	Frequency of Detection (FOD) [b]				Detection Limits			Detected Concentrations			Location of Maximum Concentration (Sample Date)	GA Water Instream Standards [c]	National Recommended Water Quality Criteria [d]	Is Constituent a COPC? [e]	
	Number of Detects		Number of Sample	%	Min (mg/L)	-	Max (mg/L)	Min (mg/L)	-	Max (mg/L)		(mg/L)	(mg/L)	(YES, no)	Rationale
Volatile Organic Compounds															
Acetone	2	-	7	29	3.80E-03	-	7.60E-03	3.10E-03	-	1.40E-02	F39SW-06(4/8/2010)	NA	NA	**YES**	NSL
cis-1,2-Dichloroethene	7	-	7	100	–	-	–	2.30E-04	-	1.10E-03	F39SW-01, F39SW-03(4/8/2010)	NA	NA	**YES**	NSL
trans-1,2-Dichloroethene	2	-	7	29	5.00E-04	-	5.00E-04	1.00E-04	-	1.10E-04	F39SW-01(4/8/2010)	1.00E+01	1.40E-01	no	BSL
Methylene chloride	1	-	7	14	2.00E-04	-	2.50E-04	2.10E-04	-	2.10E-04	F39SW-01(4/8/2010)	5.90E-01	4.60E-03	no	BSL
Tetrachloroethene	7	-	7	100	–	-	–	1.40E-04	-	1.30E-03	F39SW-05(4/8/2010)	3.30E-03	6.90E-04	no	BSL
Trichloroethene	7	-	7	100	–	-	–	1.50E-03	-	4.80E-03	F39SW-05(4/8/2010)	3.00E-02	2.50E-03	no	BSL
Semi Volatile Organic Compounds															
Caprolactam	5	-	7	71	5.00E-03	-	5.00E-03	1.60E-03	-	2.60E-03	F39SW-04(4/8/2010)	NA	NA	**YES**	NSL
Inorganics															
Arsenic	1	-	7	14	6.00E-03	-	1.90E-02	2.20E-02	-	2.20E-02	F39SW-07(4/8/2010)	5.00E-02	1.80E-05	no	BSL
Barium	7	-	7	100	–	-	–	3.80E-02	-	4.90E-02	F39SW-05(4/8/2010), F39SW-06(4/8/2010)	NA	1.00E+00	no	BSL
Chromium	4	-	7	57	5.00E-03	-	5.00E-03	2.20E-03	-	4.20E-03	F39SW-01(4/8/2010)	1.10E-02	NA	no	BSL
Lead	7	-	7	100	–	-	–	3.90E-03	-	9.20E-03	F39SW-04(4/8/2010)	1.20E-03	NA	**YES**	ASL
Mercury	1	-	7	14	1.00E-04	-	1.00E-04	8.40E-05	-	8.40E-05	F39SW-05(4/8/2010)	1.20E-05	NA	**YES**	ASL

–	Not applicable.
ASL	Above screening level.
BSL	Below screening level.
COPC	Constituent of Potential Concern
mg/L	Milligrams per liter.
NA	Not available.
USEPA	United States Environmental Protection Agency.

* The USEPA Regional Screening Level for total chromium is the Maximum Contaminant Level (MCL) (USEPA 2013e).
[a] Only detected constituents are presented. For duplicate samples, the highest detected value or the lowest detection limit were used.
[b] Frequency of detection (FOD) is equal to the number of detects divided by the total number of samples analyzed.
[c] The Georgia Water Instream Standards were used (GAEPD 2011).
[d] The National Recommended Water Quality Criteria were used (2013f).
[e] The USEPA Tapwater Regional Screening Levels (RSLs) were used (USEPA 2013e). RSLs based on noncancer values were adjusted to a target hazard of 0.1 to account for cumulative effects with the
[e] Constituents detected with maximum concentrations above the GA standards are considered COPCs. If a GA standard is not available, the USEPA Tapwater Regional Screening Levels were used. Constituents detected with maximum concentrations below GA Standards and/or USEPA Tapwater Regional Screening Level are not considered COPCs.
[f] The screening level for lead is the federal drinking water action level (USEPA 2013e).

Table 6-6
Selection of Constituents of Potential Concern for Groundwater
SWMU 39
Fort Stewart, Georgia

Constituent [a]	Frequency of Detection (FOD) [b]				Detection Limits			Detected Concentrations			Location of Maximum Concentration (Sample Date)	USEPA Tap Water Regional Screening Level [c]		USEPA Maximum Contaminant Level
	Number of Detects		Number of Samples	(%)	Min (mg/L)	-	Max (mg/L)	Min (mg/L)	-	Max (mg/L)		(mg/L)		(mg/L)
Volatile Organic Compounds														
Acetone	5	-	66	8	1.10E-03	-	2.00E-01	1.00E-02	-	2.40E-01	G4MW048(5/6/2011)	1.20E+00	n	NA
Benzene	18	-	66	27	5.00E-04	-	1.00E-02	1.00E-04	-	1.60E-02	G4MW035(1/26/2011)	3.90E-04	c*	5.00E-03
2-Butanone	3	-	66	5	1.00E-02	-	1.00E-01	1.50E-02	-	2.50E-02	G4MW019(1/27/2011),G4MW051(5/6/2011)	4.90E-01	n	NA
Carbon disulfide	12	-	66	18	3.40E-04	-	1.00E-02	1.10E-04	-	2.00E-03	G4MW051(5/6/2011)	7.20E-02	n	NA
Chloroform	3	-	66	5	5.00E-04	-	1.00E-02	5.50E-04	-	1.10E-03	G4MW047(1/26/2011)	1.90E-04	c	8.00E-02
Chloromethane	1	-	66	2	5.00E-04	-	1.00E-02	1.90E-04	-	1.90E-04	G4MW035(4/6/2010)	1.90E-02	n	NA
1,1-Dichloroethane	11	-	66	17	5.00E-04	-	1.00E-02	1.10E-04	-	1.70E-03	G4MW052(5/6/2011),G4MW052(7/12/2011)	2.40E-03	c	NA
1,1-Dichloroethene	23	-	66	35	5.00E-04	-	1.00E-02	1.30E-04	-	3.00E-03	G4MW052(7/12/2011)	2.60E-02	n	7.00E-03
cis-1,2-Dichloroethene	45	-	66	68	5.00E-04	-	1.00E-03	1.30E-04	-	2.60E-01	G4MW051(5/6/2011)	2.80E-03	n	7.00E-02
trans-1,2-Dichloroethene	32	-	66	49	5.00E-04	-	1.00E-03	2.90E-04	-	6.40E-03	G4MW041(1/27/2011)	8.60E-03	n	1.00E-01
Ethylbenzene	1	-	66	2	5.00E-04	-	1.00E-02	4.30E-04	-	4.30E-04	G4MW047(1/26/2011)	1.30E-03	c	7.00E-01
Methyl-tert-butyl ether	1	-	66	2	5.00E-04	-	1.00E-02	1.10E-03	-	1.10E-03	G4MW048(5/6/2011)	1.20E-02	c	NA
Tetrachloroethene	13	-	66	20	5.00E-04	-	1.00E-03	1.10E-04	-	2.90E-01	G4MW041(1/27/2011)	3.50E-03	n	5.00E-03
Toluene	4	-	66	6	5.00E-04	-	1.00E-02	4.70E-04	-	1.90E-03	G4MW047(1/26/2011)	8.60E-02	n	1.00E+00
Trichloroethene	44	-	66	67	5.00E-04	-	1.00E-03	1.50E-04	-	5.50E-01	G4MW041(1/27/2011)	2.60E-04	n	5.00E-03
Vinyl chloride	3	-	66	5	5.00E-04	-	1.00E-02	2.30E-04	-	2.50E-03	G4MW010(1/27/2011)	1.50E-05	c	2.00E-03
Xylenes (total)	1	-	66	2	5.00E-04	-	1.00E-02	1.60E-03	-	1.60E-03	G4MW047(1/26/2011)	1.90E-02	n	1.00E+01
Semi Volatile Organic Compounds														
Bis(2-chloroisopropyl) ether	2	-	46	4	1.00E-03	-	1.10E-03	1.30E-04	-	3.40E-04	G4MW052(5/6/2011)	3.10E-04	c	NA
4-Methylphenol	1	-	46	2	2.00E-03	-	2.20E-03	1.40E-03	-	1.40E-03	G4MW042(1/26/2011)	1.40E-01	n	NA
Inorganics														
Arsenic	8	-	42	19	4.10E-03	-	1.00E-02	4.00E-03	-	2.40E-02	G4MW053(5/6/2011)	4.50E-05	c	1.00E-02
Barium	39	-	42	93	2.50E-02	-	2.50E-02	8.40E-03	-	2.70E-01	G4MW022(1/25/2011)	2.90E-01	n	2.00E+00
Cadmium	2	-	42	5	2.00E-03	-	2.00E-03	6.60E-04	-	6.80E-04	G4MW013(1/27/2011)	6.90E-04	n	5.00E-03
Chromium	9	-	42	21	2.20E-03	-	5.00E-03	2.10E-03	-	3.50E-02	G4MW028(1/25/2011)	3.10E-05	c	1.00E-01
Lead	8	-	42	19	1.00E-02	-	1.40E-02	1.90E-03	-	1.70E-02	G4MW029(1/27/2011)	NA		1.50E-02
Mercury	4	-	42	10	1.00E-04	-	1.00E-04	5.60E-05	-	1.40E-04	G4MW028(1/25/2011)	6.30E-05	n	2.00E-03
Selenium	4	-	42	10	2.70E-03	-	1.00E-02	2.70E-03	-	7.40E-03	G4MW029(1/27/2011)	7.80E-03	n	5.00E-02
Silver	11	-	42	26	5.00E-03	-	5.00E-03	4.00E-04	-	1.80E-03	G4MW032(1/25/2011)	7.10E-03	n	NA

COPC	Constituent of Potential Concern	mg/L	Milligrams per liter.
c*	The noncancer screening level is less than 100 times the cancer screening level.	n	Noncancer.
		NA	Not available.
c	Cancer.	USEPA	United States Environmental Protection Agency.

[a] Only constituents detected at least once are presented. For duplicate samples, the highest detected value or the lowest detection limit was used. Elemental mercury was used conservatively in the screening.

[b] Frequency of detection (FOD) is equal to the number of detects divided by the total number of samples analyzed.

[c] The USEPA Tapwater Regional Screening Levels (RSLs) were used (USEPA 2013e). RSLs based on noncancer values were adjusted to a target hazard of 0.1 to account for cumulative effects with the exception of lead.

Table 6-7
Exposure Point Concentrations
SWMU 39
Fort Stewart, Georgia

Constituent of Potential Concern	Constituent of Potential Concern [a]						Exposure Point Concentrations [b]					
	Surface Soil (0-1 ft)	Soil (0-8 ft)	Soil (1-8 ft)		Sediment	Surface Water	Surface Soil (mg/kg)	Soil (mg/kg) (0-8 ft)	Soil (mg/kg) (1-8 ft)		Sediment (mg/kg)	Surface Water (mg/L)
		Direct Contact	Direct Contact	Vapor Inhalation				Direct Contact	Direct Contact	Vapor Inhalation		
Volatile Organic Compounds												
Acetone	no	no	no	**YES**	no	**YES**	–	–	–	1.10E-01 m	–	1.40E-02 m
Benzene	–	no	no	**YES**	–	–	–	–	–	9.10E-04 m	–	–
Benzene,1-methylethyl	–	no	no	**YES**	–	–	–	–	–	1.30E-03 m	–	–
Carbon disulfide	–	no	no	**YES**	–	–	–	–	–	1.30E-03 m	–	–
1,2-Dibromoethane	–	no	no	**YES**	–	–	–	–	–	4.30E-04 m	–	–
cis-1,2-Dichloroethene	–	no	no	**YES**	no	**YES**	–	–	–	1.60E-03 m	–	1.10E-03 m
trans-1,2-Dichloroethene	–	–	–	–	–	no	–	–	–	–	–	–
Ethylbenzene	–	no	no	**YES**	–	–	–	–	–	6.80E-03 m	–	–
Methylcyclohexane	–	**YES**	**YES**	**YES**	–	–	–	1.00E-03 m	1.00E-03 m	1.00E-03 m	–	–
Methylene chloride	–	–	–	–	–	no	–	–	–	–	–	–
4-Methyl-2-pentanone	–	no	no	**YES**	–	–	–	–	–	1.80E-03 m	–	–
Tetrachloroethene	–	–	–	–	no	no	–	–	–	–	–	–
Toluene	–	no	no	**YES**	–	–	–	–	–	1.10E-02 m	–	–
Trichloroethene	–	no	no	**YES**	no	no	–	–	–	3.00E-03 m	–	–
Xylenes (total)	–	no	no	**YES**	–	–	–	–	–	5.50E-02 m	–	–
Semi Volatile Organic Compounds												
Acenaphthene	no	no	–	–	–	–	–	–	–	–	–	–
Acenaphthylene	**YES**	**YES**	**YES**	**YES**	–	–	4.00E-01 m	1.03E-01	2.00E-01 m	2.00E-01 m	–	–
Anthracene	no	no	no	**YES**	–	–	–	–	–	8.90E-02 m	–	–
Benz(a)anthracene	**YES**	**YES**	**YES**	no	–	–	5.00E-01 m	1.46E-01	4.30E-01 m	–	–	–
Benzaldehyde	–	no	no	**YES**	no	–	–	–	–	1.30E-01 m	–	–
Benzo(a)pyrene	**YES**	**YES**	**YES**	no	–	–	3.13E-01	1.76E-01	6.80E-01 m	–	–	–
Benzo(b)fluoranthene	**YES**	**YES**	**YES**	no	no	–	4.10E-01	2.19E-01	1.88E-01	–	–	–
Benzo(g,h,i)perylene	**YES**	**YES**	**YES**	no	–	–	4.80E-01 m	1.30E-01	3.70E-01 m	–	–	–
Benzo(k)fluoranthene	no	no	no	no	–	–	–	–	–	–	–	–
1,1'-Biphenyl	no	no	–	–	–	–	–	–	–	–	–	–
Bis(2-ethylhexyl)phthalate	–	–	–	–	no	–	–	–	–	–	–	–
Caprolactam	–	–	–	–	–	**YES**	–	–	–	–	–	2.60E-03 m
4-Chlorobenzenamine	no	no	no	no	–	–	–	–	–	–	–	–
Chrysene	no	no	no	no	–	–	–	–	–	–	–	–
Dibenz(a,h)anthracene	**YES**	**YES**	**YES**	no	–	–	6.80E-02 m	6.34E-02	1.00E-01 m	–	–	–
Di-n-octylphthalate	no	no	–	–	–	–	–	–	–	–	–	–
Fluoranthene	no	no	no	no	–	–	–	–	–	–	–	–
Fluorene	no	no	no	**YES**	–	–	–	–	–	1.10E-02 m	–	–
Indeno(1,2,3-cd)pyrene	**YES**	**YES**	**YES**	no	–	–	4.20E-01 m	1.14E-01	3.30E-01 m	–	–	–
2-Methylnaphthalene	no	no	no	**YES**	no	–	–	–	–	5.50E-02 m	–	–
4-Methylphenol	–	–	–	–	no	–	–	–	–	–	–	–
Naphthalene	–	no	no	**YES**	–	–	–	–	–	1.10E-02 m	–	–
Phenanthrene	**YES**	**YES**	**YES**	**YES**	**YES**	–	2.10E-01 m	6.86E-02	6.70E-02 m	6.70E-02 m	1.40E-01 m	–
Pyrene	no	no	no	**YES**	–	–	–	–	–	6.10E-01 m	–	–
Inorganics												
Arsenic	no	**YES**	**YES**	no	**YES**	no	–	5.26E-01	5.36E-01	–	9.42E+00	–
Barium	no	no	no	no	no	no	–	–	–	–	–	–
Cadmium	no	no	–	–	no	–	–	–	–	–	–	–
Chromium	**YES**	**YES**	**YES**	no	**YES**	no	5.90E+00 m	3.77E+00	3.96E+00	–	3.88E+00	–
Lead	no	no	no	no	no	**YES**	–	–	–	–	–	6.24E-03 avg
Mercury	no	no	no	**YES**	no	**YES**	–	–	–	9.60E-02 m	–	8.40E-05 m

– Not applicable.
ft Feet.
m The exposure point concentration is based upon the maximum.
mg/kg Milligrams per kilogram.
mg/L Milligrams per liter.

[a] See Tables 6-1 through Tables 6-6 for more details.
[b] The UCLs were calculated using ProUCL (4.1.00). The UCL used is the one recommended by ProUCL (4.1.00).
EPCs marked with "m" are based on the maximum detected concentration.

Table 6-8
Physical and Chemical Properties of the Constituents of Potential Concern
SWMU 39
Fort Stewart, Georgia

Constituent	Molecular Weight (g/mol)	[ref]	Melting Point (°C)	[ref]	Water Solubility (mg/L 25 °C)	[ref]	Henry's Law Constant (atm-m³/mol) (25 °C)	Henry's Law Constant (unitless) (25 °C)	[ref]	Diffusivity in Air (cm²/sec)	[ref]	Diffusivity in Water (cm²/sec)	[ref]	Koc or Kd (mL/g)	[ref]	Log Kow (L/kg)	[ref]	Enthalpy of vaporization at boiling point $\Delta H_{v,b}$ (cal/mol)	[ref]	Normal boiling point Tb (K)	[ref]	Critical temperature Tc (K)	[ref]
Volatile Organic Compounds																							
Acetone	58.08	RSL	-9.48E+01	SCDM	1.00E+06	RSL	3.50E-05	1.43E-03	RSL	1.06E-01	RSL	1.15E-05	RSL	2.36E+00	RSL	-2.40E-01	CFATE	6.96E+03	J&E	3.29E+02	SCDM	5.08E+02	J&E
cis-1,2-Dichloroethene	96.94	RSL	-8.00E+01	SCDM	6.41E+03	RSL	4.08E-03	1.67E-01	RSL	8.84E-02	RSL	1.13E-05	RSL	3.96E+01	RSL	1.86E+00	CFATE	7.19E+03	J&E	3.34E+02	SCDM	5.44E+02	J&E
Methylcyclohexane	98.19	HSDB	-1.27E+02	RAIS	1.40E+01	J&E	1.03E-01	4.20E+00	J&E	7.35E-02	J&E	8.52E-06	J&E	7.85E+01	J&E	3.61E+00	RAIS	2.50E+04	calc	3.74E+02	RAIS	5.72E+02	J&E
Semi Volatile Organic Compounds																							
Acenaphthylene	152.2	SCDM	9.25E+01	SCDM	1.61E+01	SCDM	1.13E-04	4.62E-03	SCDM	4.39E-02	RAIS	7.53E-06	RAIS	3.09E+03	SCDM	3.94E+00	CFATE	1.34E+04	calc	5.53E+02	SCDM	8.30E+02	calc
Benz(a)anthracene	228.3	RSL	1.60E+02	CFATE	9.40E-03	RSL	1.20E-05	4.90E-04	RSL	5.09E-02	RSL	5.94E-06	RSL	1.77E+05	RSL	5.66E+00	CFATE	1.66E+04	calc	7.11E+02	CFATE	1.07E+03	calc
Benzo(a)pyrene	252.32	RSL	1.79E+02	CFATE	1.62E-03	RSL	4.57E-07	1.87E-05	RSL	4.76E-02	RSL	5.56E-06	RSL	5.87E+05	RSL	5.97E+00	CFATE	1.75E+04	calc	7.68E+02	CFATE	1.15E+03	calc
Benzo(b)fluoranthene	252.32	RSL	1.67E+02	CFATE	1.50E-03	RSL	6.57E-07	2.68E-05	RSL	4.76E-02	RSL	5.56E-06	RSL	5.99E+05	RSL	6.12E+00	CFATE	1.70E+04	J&E	7.16E+02	EPI	9.69E+02	J&E
Benzo(g,h,i)perylene	276.34	SCDM	2.78E+02	CFATE	2.60E-04	SCDM	1.41E-07	5.76E-06	SCDM	4.20E-02	L90-calc	4.81E-06	L90-calc	3.86E+06	SCDM	6.58E+00	CFATE	2.02E+04	calc	7.73E+02	CFATE	1.16E+03	calc
Caprolactam	113.16	RSL	6.93E+01	HSDB	7.72E+05	RSL	2.53E-08	1.03E-06	RSL	6.92E-02	RSL	9.00E-06	RSL	2.45E+01	RSL	6.60E-01	EPI	1.22E+04	calc	5.43E+02	HSDB	7.80E+02	calc
Dibenz(a,h)anthracene	278.36	RSL	2.69E+02	CFATE	2.49E-03	RSL	1.41E-07	5.76E-06	RSL	4.46E-02	RSL	5.21E-06	RSL	1.91E+06	RSL	6.50E+00	CFATE	1.25E+04	calc	7.97E+02	CFATE	1.20E+03	calc
Indeno(1,2,3-cd)pyrene	276.34	RSL	1.64E+02	CFATE	2.20E-05	RSL	1.60E-06	6.56E-05	RSL	4.48E-02	RSL	5.23E-06	RSL	3.47E+06	RSL	6.58E+00	CFATE	2.02E+04	calc	7.70E+02	CFATE	1.16E+03	calc
Phenanthrene	178.23	SCDM	9.92E+01	SCDM	1.15E+00	SCDM	2.33E-05	9.52E-04	SCDM	5.43E-02	L90-calc	5.85E-06	L90-calc	2.97E+04	SCDM	4.46E+00	CFATE	1.33E+04	calc	6.13E+02	SCDM	9.20E+02	calc
Inorganics																							
Arsenic	74.922	RSL	1.88E+02	EPI	insoluble	HSDB	—	—	—	—	—	—	—	2.90E+01	Kd-SCDM	6.80E-01	SCDM	—	—	7.47E+02	EPI	1.12E+03	calc
Chromium	52	RSL	1.90E+03	SCDM	1.69E+06	RSL	—	—	—	—	—	—	—	1.90E+01	Kd-SCDM	—	—	—	—	2.92E+03	SCDM	4.37E+03	calc
Lead	207.2	RSL	3.27E+02	HSDB	insoluble	SCDM	—	—	—	—	—	—	—	9.00E+02	Kd-SCDM	7.30E-01	SCDM	—	—	2.01E+03	HSDB	3.02E+03	calc
Mercury	200.59	RSL	-3.88E+01	RAIS	6.00E-02	RSL	1.14E-02	4.67E-01	RSL	3.07E-02	RSL	6.30E-06	RSL	5.20E+01	J&E	6.20E-01	RAIS	1.41E+04	J&E	6.30E+02	RAIS	1.75E+03	J&E

References [ref]:

Parameters were obtained from USEPA Regional Screening Level (RSL) Table (USEPA 2013e) where available, otherwise, they were obtained from literature sources cited as follows:
CFATE (SRC 2013); HSDB (NLM 2013); EPISuite (USEPA 2011a); J&E (USEPA 2004a); Lyman, et al. (L90, 1990); RAIS (ORNL 2013); SCDM (USEPA 2013c).

—	Not applicable.
°C	Degrees Celsius.
cal/mol	Calorie per mole.
cm²/sec	Square centimeters per second.
calc'd	Calculated.
g/mol	Grams per mole.
K	Kelvin
Kd	Soil-water distribution coefficient (inorganics).
Koc	Organic carbon partition coefficient (organics).
Kow	Octanol-water partition coefficient.
L/kg	Liters per kilogram.
mg/L	Milligrams per liter.
mL/g	Milliliters per gram.

Table 6-9
Risk and Hazard Equations for a Current and Hypothetical Future Site Worker and Hypothetical Consturcion Worker Exposure to Soil
SWMU 39
Fort Stewart, Georgia

ROUTE-SPECIFIC RISK/HAZARD:

Oral: $ELCR_o$ *or* HQ_o $= \dfrac{EPCs \times RAF \times FI \times IRs \times EF \times ED}{(10^6\ mg/kg) \times BW \times (AT_C\ \textit{or}\ AT_{NC}) \times ([1/CSF_o]\ \textit{or}\ RfD_o)}$

Dermal: $ELCR_d$ *or* HQ_d $= \dfrac{EPCs \times SSAs \times SAR \times ABSd \times EF \times ED}{(10^6\ mg/kg) \times BW \times (AT_C\ \textit{or}\ AT_{NC}) \times ([1/CSF_a]\ \textit{or}\ RfD_a)}$

Inhalation: $ELCR_i$ *or* HQ_i $= \dfrac{EPC_i \times ET \times CF \times EF \times ED}{(VF\ \text{or}\ PEF) \times (AT_C\ \textit{or}\ AT_{NC}) \times ([1/IUR]\ \textit{or}\ RfC)}$

$$VF = \frac{Q/C_{vol} \times [3.14 \times D_A \times T]^{1/2}}{2 \times \rho_b \times D_A \times (10{,}000\ cm^2/m^2)}$$

used for volatiles

$$PEF = \frac{Q/C_{wind} \times (3{,}600\ sec/hr)}{RPF \times (1\text{-}V) \times (Um/Ut)^3 \times Fx}$$

used for non-volatiles

$$D_A = \frac{[(\theta_{as}^{10/3} \times D_{air} \times H_o) + (\theta_{ws}^{10/3} \times D_{wat})] / \theta_T^2}{(\rho_b \times Koc \times Foc) + \theta_{ws} + (\theta_{as} \times H_o)}$$

EPC_i = MINIMUM [EPCs, C_{sat}] <u>OR</u> = EPCs when C_{sat} is not relevant

$$C_{sat} = \frac{S}{\rho_b} \times [(Koc \times Foc \times \rho_b) + \theta_{ws} + (H_o \times \theta_{as})]$$

C_{sat} is relevant only for organic constituents with melting point below 30ºC.

TOTAL CANCER RISK: $ELCR = ELCR_o + ELCR_d + ELCR_i$

TOTAL NON-CANCER HAZARD: $HI = HQ_o + HQ_d + HQ_i$

Variable Definitions:

θ_{as}	Air-filled porosity of the soil (unitless).
θ_T	Total soil porosity (unitless).
θ_{ws}	Water-filled porosity of the soil (unitless).
ρ_b	Dry soil bulk density (g/cm³).
ABSd	Dermal absorption efficiency (unitless).
AT_C	Averaging time for cancer effects (days) (Table 6-16).
AT_{NC}	Averaging time for noncancer effects (days) (Table 6-16).
BW	Body weight (kg) (Table 6-16).
CF	Conversion Factor 0.042 day/hour.
C_{sat}	Constituent saturation limit in soil (mg/kg).
CSF	Cancer slope factor for oral (CSFo) or dermal (adjusted to an absorbed dose, CSFa) exposure (kg-day/mg [inverse mg/kg/day]) (Table 6-19).
D_A	Apparent diffusivity in soil (cm²/sec).
D_{air}	Constituent diffusivity in air (cm²/sec) (Table 6-8).
D_{wat}	Constituent diffusivity in water (cm²/sec) (Table 6-8).
ED	Exposure duration (years) (Table 6-16).

Table 6-9
Risk and Hazard Equations for a Current and Hypothetical Future Site Worker and Hypothetical Consturcion Worker Exposure to Soil
SWMU 39
Fort Stewart, Georgia

EF	Exposure frequency (days/year) (Table 6-16).
ELCR	Excess lifetime cancer risk (unitless).
EPCs	Exposure point concentration in soil (mg/kg).
EPC_i	Exposure point concentration relevant to inhalation (mg/kg) (minimum of EPCs and C_{sat}).
ET	Exposure time (hrs/day) (Table 6-16).
FI	Fraction ingested from area of concern (unitless) (Table 6-16).
Foc	Fraction organic carbon in the soil (unitless).
Fx	Function of Ut/Um (unitless); $Fx = 0.18 \times (8x^3 + 12x) \times \exp[-(x^2)]$, where $x = 0.886 \times (Ut/Um)$.
H	Henry's law constant (atm-m³/mol) (Table 6-8).
HI	Hazard index for non-cancer effects (unitless); sum of the HQs.
H_o	Dimensionless Henry's law constant (unitless); calculated as $H_o = H / RT$.
HQ	Hazard quotient for non-cancer effects (unitless).
IRs	Ingestion rate of soil (mg/day) (Table 6-16).
IUR	Inhalation Unit Risk (m³/mg) (Table 6-20).
Koc	Organic carbon partition coefficient (cm³/g = mL/g = L/kg) (Table 6-8).
PEF	Particulate emission factor (m³/kg).
Q/C_{vol}	Volatile emission flux per unit concentration [(g/m²/sec)/(kg/m³)].
Q/C_{wind}	Particulate emission flux per unit concentration [(g/m²/sec)/(kg/m³)].
RAF	Relative absorption factor for soil ingestion (unitless).
RfC	Reference concentration (mg/m³) (Table 6-18).
RfD	Reference dose for oral (RfDo) and dermal (adjusted to an absorbed dose, RfDa), exposure (mg/kg/day) (Table 6-17).
RPF	Respirable particle fraction (0.036 g/m²/hr).
RT	Product of the universal gas constant ($R = 8.206 \times 10^{-5}$ atm-m^3/mol/K) and the relevant Kelvin temperature (T = 298.15 K); RT = 0.02447 atm-m^3/mol.
S	Constituent solubility limit in water (mg/L).
SAR	Soil-to-skin adherence rate (mg/cm²/day) (Table 6-16).
SSAs	Exposed skin surface area for soil contact (cm²) (Table 6-16).
T	Exposure interval (sec).
Um	Mean annual wind speed (m/sec).
Ut	Equivalent threshold value of windspeed at 7 meters (11.32 m/sec).
V	Fraction of vegetative cover (unitless).
VF	Volatilization factor (m³/kg).
x	Intermediate value in the calculation of PEF; $x = 0.886 \times (Ut/Um)$.

Table 6-10
Risk and Hazard Equations for a Hypothetical Adolescent Trespasser and Future Resident Exposure to Soil
SWMU 39
Fort Stewart, Georgia

ROUTE-SPECIFIC RISK/HAZARD:

Oral: $ELCR_o$ *or* HQ_o $= \dfrac{EPCs \times RAF \times FI \times IRs \times EF \times ED \times ADAF}{(10^6\ mg/kg) \times BW \times (AT_C\ \textit{or}\ AT_{NC}) \times ([1/CSF_o]\ \textit{or}\ RfD_o)}$

Dermal: $ELCR_d$ *or* HQ_d $= \dfrac{EPCs \times SSAs \times SAR \times ABSd \times EF \times ED \times ADAF}{(10^6\ mg/kg) \times BW \times (AT_C\ \textit{or}\ AT_{NC}) \times ([1/CSF_a]\ \textit{or}\ RfD_a)}$

Inhalation: $ELCR_i$ *or* HQ_i $= \dfrac{EPC_i \times ET \times CF \times EF \times ED \times ADAF}{(VF\ \text{or}\ PEF) \times (AT_C\ \textit{or}\ AT_{NC}) \times ([1/IUR]\ \textit{or}\ RfC)}$

$$VF = \frac{Q/C_{vol} \times [3.14 \times D_A \times T]^{1/2}}{2 \times \rho_b \times D_A \times (10{,}000\ cm^2/m^2)}$$

used for volatiles

$$PEF = \frac{Q/C_{sr} \times (1/F_D) \times T \times A_R}{556 \times (W/3)^{0.4} \times [(365 - p)/365] \times \Sigma VKT}$$

used for non-volatiles

EPC_i = MINIMUM [EPCs, C_{sat}] <u>OR</u> = EPCs when C_{sat} is not relevant

$$C_{sat} = \frac{S}{\rho_b} \times [(Koc \times Foc \times \rho_b) + \theta_{ws} + (H_o \times \theta_{as})]$$

C_{sat} is relevant only for organic constituents with melting point below 30ºC.

TOTAL CANCER RISK: $ELCR = ELCR_o + ELCR_d + ELCR_i$

TOTAL NON-CANCER HAZARD: $HI = HQ_o + HQ_d + HQ_i$

Variable Definitions:

θ_{as}	Air-filled porosity of the soil (unitless).
θ_T	Total soil porosity (unitless).
θ_{ws}	Water-filled porosity of the soil (unitless).
ρ_b	Dry soil bulk density (g/cm³).
ABSd	Dermal absorption efficiency (unitless).
ADAF	Age-Dependent Adjustment Factor for evaluation of risk from constituents with a mutagenicity mode of action.
AT_C	Averaging time for cancer effects (days) (Table 6-16).
AT_{NC}	Averaging time for noncancer effects (days) (Table 6-16).
A_R	Surface area of contaminated road (m^2).
BW	Body weight (kg) (Table 6-16).
CF	Conversion Factor 0.042 day/hour.
C_{sat}	Constituent saturation limit in soil (mg/kg).
CSF	Cancer slope factor for oral (CSFo) or dermal (adjusted to an absorbed dose, CSFa) exposure (kg-day/mg [inverse mg/kg/day]) (Table 6-19).
D_A	Apparent diffusivity in soil (cm²/sec).
D_{air}	Constituent diffusivity in air (cm²/sec) (Table 6-8).
D_{wat}	Constituent diffusivity in water (cm²/sec) (Table 6-8).
ED	Exposure duration (years) (Table 6-16).
EF	Exposure frequency (days/year) (Table 6-16).
ELCR	Excess lifetime cancer risk (unitless).
EPCs	Exposure point concentration in soil (mg/kg) (Table 6-7).
EPC_i	Exposure point concentration relevant to inhalation (mg/kg) (minimum of EPCs and C_{sat}).
ET	Exposure time (hrs/day) (Table 6-16).

Table 6-10
Risk and Hazard Equations for a Hypothetical Adolescent Trespasser and Future Resident Exposure to Soil
SWMU 39
Fort Stewart, Georgia

FD	Dispersion correction factor (unitless).
FI	Fraction ingested from area of concern (unitless) (Table 6-16).
Foc	Fraction organic carbon in the soil (unitless).
Fx	Function of Ut/Um (unitless); $Fx = 0.18 \times (8x^3 + 12x) \times \exp[-(x^2)]$, where $x = 0.886 \times (Ut/Um)$.
H	Henry's law constant (atm-m³/mol) (Table 6-8).
HI	Hazard index for non-cancer effects (unitless); sum of the HQs.
H_o	Dimensionless Henry's law constant (unitless); calculated as $H_o = H / RT$.
HQ	Hazard quotient for non-cancer effects (unitless).
IRs	Ingestion rate of soil (mg/day) (Table 6-16).
IUR	Inhalation Unit Risk (m³/mg) (Table 6-20).
Koc	Organic carbon partition coefficient (cm³/g = mL/g = L/kg) (Table 6-8).
p	Number of days with 0.01 inches of precipitation (days/year).
PEF	Particulate emission factor (m³/kg).
Q/C_{vol}	Volatile emission flux per unit concentration [(g/m²/sec)/(kg/m³)].
Q/C_{sr}	Particulate emission flux per unit concentration for construction scenario [(g/m²/sec)/(kg/m³)].
RAF	Relative absorption factor for soil ingestion (unitless).
RfC	Reference concentration (mg/m³) (Table 6-18).
RfD	Reference dose for oral (RfDo) and dermal (adjusted to an absorbed dose, RfDa), exposure (mg/kg/day) (Table 6-17).
RPF	Respirable particle fraction (0.036 g/m²/hr).
RT	Product of the universal gas constant ($R = 8.206 \times 10^{-5}$ atm-m^3/mol/K) and the relevant Kelvin temperature (T = 298.15 K); RT = 0.02447 atm-m^3/mol.
S	Constituent solubility limit in water (mg/L).
SAR	Soil-to-skin adherence rate (mg/cm²/day) (Table 6-16).
SSAs	Exposed skin surface area for soil contact (cm²) (Table 6-16).
T	Exposure interval (sec).
Um	Mean annual wind speed (m/sec).
Ut	Equivalent threshold value of windspeed at 7 meters (11.32 m/sec).
V	Fraction of vegetative cover (unitless).
VF	Volatilization factor (m³/kg).
ΣVKT	Sum of fleet vehicle kilometers traveled during construction (Number of vehicles x LR x Number of Construction Days per year) (km).
W	Mean vehicle weight (tons).
x	Intermediate value in the calculation of PEF; $x = 0.886 \times (Ut/Um)$.

Table 6-11
Soil Particulate Emission Factors
SWMU 39
Fort Stewart, Georgia

Particulate Emission Factor:

PEFcw =		1.46E+07	m³/kg	Particulate emission factor (m³/kg) during soil invasive actvities scenarios; Site specific using USEPA 2002b model.
PEF	=	3.69E+10	m³/kg	Particulate emission factor (m³/kg) under passive conditions; Site specific using USEPA 2002b model.

Particulate Emission Factor for Wind-Blown Fugitive Dust

$$PEF_{wind} = Q/C_{wind} \times \left[\frac{3600}{0.036 \times (1-V) \times \left(\frac{U_m}{U_t}\right)^3 \times F(x)} \right]$$

x	=	2.786	unitless	Function of Ut/Um; x = 0.886 × (Ut/Um)
Fx	=	0.0158	unitless	Function of x; Fx = 0.18 × (8x³ + 12x) × exp(-x²)
Q/Cwind	=	93.77	(g/m²/sec)/(kg/m³)	Wind-related particulate emission flux per unit concentration (USEPA 2002b default)
RPF	=	0.036	g/m²/hour	Respirable particle fraction (USEPA 2002b).
Um	=	3.6	m/sec	Mean annual wind speed for Savannah, Georgia (NOAA 1998)
Ut	=	11.32	m/sec	Equivalent threshold value of windspeed at 7 meters (USEPA 2002b)
V	=	0.5	unitless	Fraction vegetative cover (USEPA 2002b default)

See footnotes on the last page.

Table 6-11
Soil Particulate Emission Factors
SWMU 39
Fort Stewart, Georgia

Particulate Emission Factor for Construction Soil Invasive Activities

$$PEF_{sc} = Q/C_{sr} \times \frac{1}{F_D} \times \left[\frac{T \times A_R}{556 \times \left(\frac{W}{3}\right)^{0.4} \times \frac{365 - p}{365} \times \sum VKT} \right]$$

Q/C_{sr}	=	20.5	(g/m²/sec)/(kg/m³)	Inverse of 1-hr avg. air concentration at center of the square emission source where $Q/C_{sr} = A * \exp[(\ln A_c - B)^2/C]$
A	=	12.9351		Constant (USEPA 2002b)
B	=	5.7383		Constant (USEPA 2002b)
C	=	71.7711		Constant (USEPA 2002b)
A_c	=	1	acre	Areal extent of site soil contamination
F_D	=	1.90E-01	unitless	Dispersion correction factor
		1.90E-01		where $F_D = 0.1852+(5.3537/t_c)+(-9.6318/t_c^2)$
t_c	=	1040	hour	Duration of construction
	=	130	days	Number of days per construction event
T	=	3.74E+06	seconds	Construction time
A_R	=	388	m^2	Surface area of contaminated road ($A_R = L_R$ x W_R)
L_R	=	64	meters	$L_R = (A_c$ acres x 4047 m^2/acre$)^{0.5}$
W_R	=	6.1	meters	
W	=	12	tons	Mean vehicle weight
p	=	121	days/year	Number of days with 0.01 inces of precipitation
ΣVKT	=	17	km	Sum of fleet vehicle kilometers traveled during construction (Number of vehicles x L_R x Number of Construction Days per year)
	where:	2	unitless	Number of vehicles

g/m^2/hour	Gram per meter cubed per hour.	m^3/kg	Meters cubed per kilogram.
$(g/m^2/sec)/(kg/m^3)$	Gram per meter cubed per second divided by kilogram per meter cubed.	m/sec	Meter per second.
km	Kilometers.		
m^2	Meter squared.		

Table 6-12
Soil Volatilization Factors
Human Health Risk Assessment
SWMU 39
Fort Stewart, Georgia

Constituent	Melting Point (°C)	Solubility in Water (mg/L) (S)	Henry's Law Constant (atm-m³/mol) (H)	Henry's Law Constant (unitless) (H_o)	Partition Coefficient (mL/g) (Koc)	Saturation Limit in Soil [a] (mg/kg) (Csat)	Diffusivity in Air (cm²/sec) (D_{air})	Diffusivity in Water (cm²/sec) (D_{wat})	Apparent Diffusivity (cm²/sec) (D_A)	Volatilization Factor [a] (VF) (m³/kg) Passive	Volatilization Factor [a] (VF) (m³/kg) Soil Invasive
Volatile Organic Compounds											
Methylcyclohexane	-127	1.40E+01	1.03E-01	4.20E+00	7.85E+01	1.17E+02	7.35E-02	8.52E-06	1.44E-02	1.06E+04	1.40E+02
Semi Volatile Organic Compounds											
Acenaphthylene	92.5	1.61E+01	1.13E-04	4.62E-03	3.09E+03	—	4.39E-02	7.53E-06	4.05E-06	6.33E+05	8.34E+03
Phenanthrene	99.2	1.15E+00	2.33E-05	9.52E-04	2.97E+04	—	5.43E-02	5.85E-06	1.14E-07	3.77E+06	4.97E+04

Model Input Parameters:

Soil =	SCL	Sandy Clay Loam	Soil type.
Ts =	25	°C	Average soil temperature (USEPA 2004a).
Foc =	0.006	unitless	Fraction organic carbon (USEPA 2002b default).
ρ_b =	0.146	g/cm³	Soil dry bulk density for Sandy Clay soil (USEPA 2004a).
θ_T =	0.384	unitless	Total soil porosity for Sandy Clay soil (USEPA 2004a).
θ_{as} =	0.238	unitless	Air-filled soil porosity [= qT - qws].
θ_{ws} =	0.146	unitless	Water-filled soil porosity for Sandy Clay soil (USEPA 2004a).
Q/C_{vol} =	68.18	(g/m²/sec)/(kg/m³)	Volatilization flux per unit concentration under passive conditions (USEPA 2002b default).
Q/C_{vol_cwuw} =	14.31	(g/m²/sec)/(kg/m³)	Volatilization flux per unit concentration under soil invasive conditions (USEPA 2002b default).
T =	9.5E+08	sec	Exposure interval (USEPA 2002b).
T_{cwuw} =	3.7E+06	sec	Exposure interval for the construction worker scenarion (USEPA 2002b).

—	Not available.						
atm-m^3/mol	Atmosphere-meters cubed per mol.	g/m^2/sec	Grams per meters sqaured per second.	mg/kg	Milligram per kilogram.	sec	Second.
°C	Degrees Celsius.	kg/m^3	Kilogram per meters squared.	mg/L	Milligrams per liter.		
cm^2/sec	Centimeter squared per second.	m^3/kg	Meters cubed per kilogram.	mL/g	Milliliter per gram.		

[a] Csat and VF calculated per methods in USEPA 2002b.
Csat was calculated for constituents that might potentially be liquid at soil temperature of 30°C (i.e. for constituents whose melting point is less than 30°C).
VF was only calculated for constituents that have a volatilization potential (i.e, molecular weight less than 200 and Henry's Law Constant greater than 1 x 10^{-5}).

Table 6-13a
Risk and Hazard Equations for Wadding Exposure to Surface Water
SWMU 39
Fort Stewart, Georgia

ROUTE-SPECIFIC RISK/HAZARD:

Oral:

$$ELCR_o \text{ or } HQ_o = \frac{EPCsw \times IRsw \times ETsw \times EF \times ED}{BW \times (AT_C \text{ or } AT_{NC}) \times ([1/CSF_o] \text{ or } RfD_o)}$$

Dermal:

$$ELCR_d \text{ or } HQ_d = \frac{EPCsw \times DA \times SSAsw \times EF \times ED \times ADAF}{BW \times (AT_C \text{ or } AT_{NC}) \times ([1/CSF_a] \text{ or } RfD_a)}$$

Inorganics:

$$DA\,[0] = \frac{K_p \times ETsw}{1000\ cm^3/L}$$

Organics:

$$DA\,[1] = \frac{2\,FA \times K_p}{1000\ cm^3/L} \times \sqrt{(6\,\tau \times ETsw)/\pi} \qquad \text{if } ETsw \le t^*$$

or

$$DA\,[2] = \frac{FA \times K_p}{1000\ cm^3/L} \times \frac{ETsw}{1+B} + \frac{2\,\tau\,(1 + 3\,B + 3\,B^2)}{(1+B)^2} \qquad \text{if } ETsw > t^*$$

Inhalation:

$$ELCR_i \text{ or } HQ_i = \frac{EPCsw \times VFsw \times ETsw \times CF \times EF \times ED \times ADAF}{(AT_C \text{ or } AT_{NC}) \times ([1/IUR] \text{ or } RfC)}$$

where:

$$VFsw = \frac{(1000\ L/m^3)}{(1/k_l) + [1/(H_o \times k_g)]} \times \frac{SA}{Hb \times Wb \times Um \times 100\ cm/m} \qquad \text{(USEPA 1988)}$$

TOTAL CANCER RISK: $ELCR = ELCR_o + ELCR_d + ELCR_i$

TOTAL NON-CANCER HAZARD: $HI = HQ_o + HQ_d + HQ_i$

Variable Definitions:

τ	(tau) Lag time for dermal absorption through the skin (hour) (Table 6-13b).
AT_C	Averaging time for cancer effects (days) (Table 6-16).
AT_{NC}	Averaging time for non-cancer effects (days) (Table 6-16).
B	Dimensionless ratio of the permeability coefficient of a compound through the stratum corneum relative to its permeability coefficient across the viable epidermis (unitless) (Table 6-13b).
BW	Body weight (kg) (Table 6-16).
CF	Conversion Factor 0.042 day/hour.
CSF	Cancer slope factor for oral (CSFo) or dermal (adjusted to an absorbed dose, CSFa) exposure (kg-day/mg [inverse mg/kg/day]) (Table 6-19).
DA	Dermal absorption factor (L/cm²/day), calculated using Equation [0].
ED	Exposure duration (years) (Table 6-16).
EF	Exposure frequency (days/year) (Table 6-16).
ELCR	Excess lifetime cancer risk (unitless).
EPCsw	Exposure point concentration in surface water (mg/L).
ETsw	Exposure time for surface water (hours/day) (Table 6-16).
FA	Fraction of absorbed water (unitless) (Table 6-13b).
H	Henry's law constant (atm-m³/mol) (Table 6-8).
Hb	Height of mixing zone (2 m).
HI	Hazard index for non-cancer effects (unitless); sum of the HQs.
H_o	Dimensionless Henry's law constant (unitless); calculated as $H_o = H/RT$.
HQ	Hazard quotient for non-cancer effects (unitless).
IRsw	Incidental ingestion rate of surface water (L/day) (Table 6-16).
IUR	Inhalation Unit Risk (m³/mg) (Table 6-20).
k_g	Gas-phase mass transfer coefficient (cm/sec) ≈ (0.833 cm/sec) × $[(18\ g/mol)/MW]^{0.335} \times (T/298)^{1.005}$.
k_l	Liquid-phase mass transfer coefficient (cm/sec) ≈ (0.002 cm/sec) × (T/298) × $[(32\ g/mol)/MW]^{1/2}$.
K_p	Permeability coefficient (cm/hour) (Table 6-13b).
MW	Molecular weight (g/mol) (Table 6-8).
RfC	Reference concentration (mg/m³) (Table 6-18).
RfD	Reference dose for oral (RfDo) and dermal (adjusted to an absorbed dose, RfDa), exposure (mg/kg/day) (Table 6-17).
RT	Product of the universal gas constant ($R = 8.206 \times 10^{-5}$ atm-m³/mol/K) and the relevant Kelvin temperature (T = 298.15 K); RT = 0.02447 atm-m³/mol.
SA	Source area (1 m²).
SSAgw	Exposed skin surface area for surface water contact (cm²) (Table 6-16).
t*	Time required to reach steady state (hour) (Table 6-13b).
Um	Mean wind speed (m/sec).
VFsw	Volatilization factor from surface water (L/m³).
Wb	Width of mixing zone (1 m).

Table 6-13b
Dermal Absorption Parameters
SWMU 39
Fort Stewart, Georgia

Constituent	ABSd [a]	Permeability Constant Kp (cm/hour) [b]		Non-Steady State Dermal Absorption Parameters [c]					DA_2hr [d]	
		Value	[Ref]	FA (unitless)	τ (hour)	t* (hour)	B (unitless)	Source	(mg/cm²/event)	
Volatile Organic Compounds										
Acetone	0	5.1E-04	RSL	1.0	0.22	0.53	0.0015	calc	1.25E-06	[2]
cis-1,2-Dichloroethene	0	1.1E-02	RSL	1.0	0.37	0.89	0.029	calc	2.98E-05	[2]
Methylcyclohexane	0	1.1E-01	RAIS	1.0	0.37	0.90	0.42	calc	2.68E-04	[2]
Semi Volatile Organic Compounds										
Acenaphthylene	0.13	1.4E-01	EPI	1.0	0.75	2.94	0.67	calc	4.77E-04	[1]
Benz(a)anthracene	0.13	5.5E-01	RSL	1.0	2.03	8.53	2.8	DRA	3.07E-03	[1]
Benzo(a)pyrene	0.13	7.1E-01	RSL	1.0	2.69	11.67	4.3	DRA	4.57E-03	[1]
Benzo(b)fluoranthene	0.13	4.2E-01	RSL	1.0	2.77	12.03	4.3	DRA	2.71E-03	[1]
Benzo(g,h,i)perylene	0.13	1.9E+00	EPI	0.6	3.70	16.86	12	calc	8.35E-03	[1]
Caprolactam	0.1	1.0E-03	RSL	1.0	0.45	1.09	0.0041	calc	2.90E-06	[2]
Dibenz(a,h)anthracene	0.13	9.5E-01	RSL	0.6	3.88	17.57	9.7	DRA	4.40E-03	[1]
Indeno(1,2,3-cd)pyrene	0.13	1.0E+00	RSL	0.6	3.78	16.83	6.7	DRA	4.75E-03	[1]
Phenanthrene	0.13	1.4E-01	DRA	1.0	1.06	4.11	0.72	DRA	5.63E-04	[1]
Inorganics										
Arsenic	0.03	1.0E-03	RSL	1.0	—	—	—	NA	2.00E-06	[0]
Chromium	0	2.0E-03	RSL	1.0	—	—	—	NA	4.00E-06	[0]
Lead	0	1.0E-04	RSL	1.0	—	—	—	NA	2.00E-07	[0]
Mercury	0	1.0E-03	RSL	1.0	—	—	—	NA	2.00E-06	[0]

References [ref]:

calc — Calculated value (USEPA 2004b).

DRA — Dermal Risk Assessment Guidance (USEPA 2004b). The B values are calculated but are consistent with values presented in the guidance manual.

EPI — USEPA 2011a

RAIS — Risk Assessment Information System (RAIS) (ORNL 2009).

cm^2 — Centimeter squared.

mg — Milligram.

NA — Not applicable.

[a] — Dermal absorption efficiency for uptake of constituents (ABSd) from a soil matrix (unitless) (USEPA 2004b).

[b] — Permeability coefficient for dermal contact with constituents in water (centimeters per hour).

[c] — Absorption parameters for use in the non-steady state model for dermal contact with constituents in water.
τ = Lag time for dermal absorption through the skin.
t* = Time required to reach steady state.
B = Ratio of the permeability coefficient through the stratus corneum relative to the permeability coefficient across the viable epidermis.
FA = Fraction of absorbed water.

[d] — Dermal absorption factor (DA) calculated according to equations presented in USEPA 2004 (using Equation [0], [1], or [2], as indicated), and on Table 6-13a based on exposure time (ET) = 2 hours.

Table 6-14
Surface Water Volatilization Factors
SWMU 39
Fort Stewart, Georgia

Constituent	Molecular Weight (g/mol) (MW)	Henry's Law Constant (atm-m³/mol) (H)	Henry's Law Constant (unitless) (H_o)	Gas-Phase Mass Transfer Coefficient (cm/s) (K_g)	Liquid-Phase Mass Transfer Coefficient (cm/s) (K_L)	Exposed Water Volatilization Factor [a] (L/m³) (VF)
Volatile Organic Compounds						
Acetone	5.81E+01	3.50E-05	1.43E-03	5.6E-01	1.5E-03	7.30E-04
cis-1,2-Dichloroethene	9.69E+01	4.08E-03	1.67E-01	4.7E-01	1.1E-03	1.58E-03
Semi Volatile Organic Compounds						
Caprolactam	1.13E+02	2.53E-08	1.03E-06	4.5E-01	1.1E-03	6.50E-07
Inorganics						
Mercury	2.01E+02	1.14E-02	4.67E-01	3.7E-01	8.0E-04	1.11E-03

Trench Model Input Parameters:

Default input parameters, as presented in the table beneath, were used.

Parameter	Unit	Value	Definition
A	m^2	2.23	Area of trench (length x width)
Dtrench	m	2.44	Depth of trench
F	unitless	1	Fraction of trench floor through which contaminant can enter
R	atm-m^3/mole-K	0.000082	Ideal gas constant
T	K	298	Average system absolute temperature
V	m^3	5.44	Volume of trench
ACH	h^{-1}	2	Air changes per hour
MWH_20	g/mol	18.02	Molecular weight of water
MWO_2	g/mol	32.00	Molecular weight of oxygen
K_L,O_2	cm/s	0.002	Liquid-phase mass transfer coefficient of oxygen at 25C
K_g,H_2O	cm/s	0.833	Gas-phase mass transfer coefficient of water vapor at 25C

atm-m^3/mol	Atmospheres-cubic meters per mole.
cm/s	Centimeter per second.
g/mol	Grams per mole.
L/m^3	Liters per cubic meter.

[a] Volatilization factors for exposed water were calculated using equations from USEPA 1988.
Mean annual wind speed (m/sec) for Savannah, Georgia (NOAA 1998). 3.6
Assuming dispersion is occuring within a box that is a square meter in area and 2 meters high.

Table 6-15
Risk and Hazard Equations for Exposure to Sediment
SWMU 39
Fort Stewart, Georgia

ROUTE-SPECIFIC RISK/HAZARD:

Oral:

$$ELCR_o \text{ or } HQ_o = \frac{EPCsed \times RAFsed \times IRsed \times EF \times ED \times ADAF}{(10^6 \text{ mg/kg}) \times BW \times (AT_C \text{ or } AT_{NC}) \times ([1/CSF_o] \text{ or } RfD_o)}$$

Dermal:

$$ELCR_d \text{ or } HQ_d = \frac{EPCsed \times SSAsed \times SedAR \times ABSd \times EF \times ED \times ADAF}{(10^6 \text{ mg/kg}) \times BW \times (AT_C \text{ or } AT_{NC}) \times ([1/CSF_a] \text{ or } RfD_a)}$$

TOTAL CANCER RISK: $ELCR = ELCR_o + ELCR_d$

TOTAL NON-CANCER HAZARD: $HI = HQ_o + HQ_d$

Variable Definitions:

ABSd	Dermal absorption efficiency (unitless) (Table 6-13b).
ADAF	Age-Dependent Adjustment Factor for evaluation of risk from constituents with a mutagenicity mode of action.
AT_C	Averaging time for cancer effects (days) (Table 6-16).
AT_{NC}	Averaging time for non-cancer effects (days) (Table 6-16).
BW	Body weight (kg) (Table 6-16).
CSF	Cancer slope factor for oral (CSFo) or dermal (adjusted to an absorbed dose, CSFa) exposure (kg-day/mg [inverse mg/kg/day]) (Table 6-19).
ED	Exposure duration (years) (Table 6-16).
EF	Exposure frequency (days/year) (Table 6-16).
ELCR	Excess lifetime cancer risk (unitless).
EPCsed	Exposure point concentration in sediment (mg/kg).
HI	Hazard index for non-cancer effects (unitless); sum of the HQs.
HQ	Hazard quotient for non-cancer effects (unitless).
IRsed	Ingestion rate of sediment (mg/day) (Table 6-16).
RAFsed	Relative absorption factor for sediment ingestion (unitless).
RfD	Reference dose for oral (RfDo) and dermal (adjusted to an absorbed dose, RfDa), exposure (mg/kg/day) (Table 6-17).
SedAR	Sediment-to-skin adherence rate (mg/cm²/day) (Table 6-16).
SSAsed	Exposed skin surface area for sediment contact (cm²) (Table 6-16).

Table 6-16
Receptor Exposure Parameters
SWMU 39
Fort Stewart, Georgia

Parameter	Symbol	Units	Resident								Adolescent Trespasser (6-16 years)		Outdoor Site Worker		Construction Worker	
			0-2 Years		2-6 Years		Child (0-6 Years)		Adult (30 Years)							
General Factors																
Averaging Time	ATc	days	25,550	[a]	25,550	[a]	25,550	[a]	25,550	[a]	25,550	[a]	25,550	[a]	25,550	[a]
Averaging Time (noncancer)	ATnc	days	730	[a]	1,460	[a]	2,190	[a]	8,760	[a]	3,650	[a]	9,125	[a]	365	[a]
Body Weight	BW	kg	15	[2]	15	[2]	15	[2]	70	[2]	45	[6]	70	[1,2]	70	[1,2]
Exposure Frequency	EF	days/year	350	[1,2]	350	[1,2]	350	[1,2]	350	[1,2]	100	[6]	250	[1,2]	130	PJ
Exposure Duration	ED	years	2	[4]	4	[4]	6	[1,2]	30	[1,2]	10	[4]	25	[1,2]	1	PJ
Age-Dependent Adjustment Factor	ADAF	unitless	10	[4]	3	[4]	–		–		3	[4]	–		–	
Inhalation																
Exposure Time	ET	hour/day	24	PJ	24	PJ	24	PJ	24	PJ	1	PJ	8	PJ	8	PJ
Conversion Factor		day/hour	0.042		0.042		0.042		0.042		0.042		0.042		0.042	
Soil - Ingestion (Oral)																
Age-Adjusted Intake Factor, Soil Oral	IFso	mg-yr/kg/day	–		–		–		–		–		–		–	
Incidental Soil Ingestion Rate	IRs	mg/day	200	[2]	200	[2]	200.0	[2]	100	[2]	50	PJ	100	[2]	330	[2]
Fraction Ingested from Souce	FI	unitless	1		1		1	–	1		1		1		1	
Soil - Dermal Contact																
Age-adjusted Intake Factor, Soil Dermal	IFsd	mg-yr/kg/day	–		–		–		–		–		–		–	
Exposed Skin Surface Area	SSAs	cm²	2,800	[3]	2,800	[3]	2,800	[3]	5,700	[3]	4,169	[5,b]	3,300	[2]	3,300	[3]
Soil-to-Skin Adherence Rate	SAR	mg/cm²/day	0.2	[3]	0.2	[3]	0.2	[3]	0.07	[3]	0.2	[3,c]	0.2	[2]	0.3	[2]
Sediment - Ingestion (Oral)																
Incidental Sediment Ingestion Rate	IRsed	mg/day	–		–		–		–		50	PJ	–		–	
Sediment - Dermal Contact																
Exposed Skin Surface Area	SSAsed	cm²	–		–		–		–		4,169	[5,b]	–		–	
Exposure Frequency	EFsed	days/year	–		–		–		–		100	[6]	–		–	
Sediment-to-Skin Adherence Rate	SedAR	mg/cm²/day	–		–		–		–		0.2	[3,c]	–		–	
Surface Water - Ingestion (Oral) and Dermal Contact																
Surface Water Ingestion Rate	IRsw	L/hour	–		–		–		–		0.005	PJ	–		–	
Exposed Skin Surface Area	SSAsw	cm²	–		–		–		–		4,169	[5,b]				
Exposure Frequency	EFsw	days/year	–		–		–		–		100	[6]	–		–	
Exposure Time	ETsw	hours/day	–		–		–		–		2	[6]	–		–	

References:

[1] USEPA 1989
[2] USEPA 1991
[3] USEPA 2002b
[4] USEPA 2005a
[5] USEPA 2011b
[6] GAEPD 2014

[a] The averaging time for cancer risk is the expected lifespan of 70 years expressed in days.
[b] SSAsed and SSAsw assumes that a receptor is wearing a short-sleeved shirt and shorts but not shoes therefore the SSAsed and SSAsw is the average surface area of hands,forarms,feet and lower legs.
[c] Soil adherence factor based on a child playing in wet soil of the geometric mean.

– Not applicable.
cm^2 Centimeter squared.
kg Kilogram.
L/hour Liter per hour.
$mg/cm^2/day$
mg-yr/kg/day
PJ Professional judgment.

Table 6-17
Noncarcinogenic Toxicity Values for Oral and Dermal Exposure
SWMU 39
Fort Stewart, Georgia

Constituent		Oral RfD (mg/kg/day) [a] Subchronic	[ref]	Chronic	[ref]	Adjustment Factor [a]	Dermal RfD (mg/kg/day) [b] Subchronic	Chronic	Target Site/ Critical Effect	Confidence Level/ Uncertainty Factor
Volatile Organic Compounds										
Acetone		3.0E-01	cx	9.0E-01	I	1	3.0E-01	9.0E-01	liver, kidney	medium/1000
cis-1,2-Dichloroethene		2.0E-02	P	2.0E-03	I	1	2.0E-02	2.0E-03	blood	low/3000
Methylcyclohexane		NA		NA		1	NA	NA	NA	NA
Semi Volatile Organic Compounds										
Acenaphthylene	[c]	3.0E-01	csx	3.0E-02	Is	1	3.0E-01	3.0E-02	kidney	medium/3000
Benz(a)anthracene		NA		NA		1	NA	NA	NA	NA
Benzo(a)pyrene		NA		NA		1	NA	NA	NA	NA
Benzo(b)fluoranthene		NA		NA		1	NA	NA	NA	NA
Benzo(g,h,i)perylene	[c]	3.0E-01	csx	3.0E-02	Is	1	3.0E-01	3.0E-02	kidney	medium/3000
Caprolactam		5.0E-01	c	5.0E-01	I	1	5.0E-01	5.0E-01	decreased body weight	high/100
Dibenz(a,h)anthracene		NA		NA		1	NA	NA	NA	NA
Indeno(1,2,3-cd)pyrene		NA		NA		1	NA	NA	NA	NA
Phenanthrene	[c]	3.0E-01	csx	3.0E-02	Is	1	3.0E-01	3.0E-02	kidney	medium/3000
Inorganics										
Arsenic		3.0E-04	c	3.0E-04	I	1	3.0E-04	3.0E-04	NA	medium/3
Chromium		2.0E-02	H	3.0E-03	I	0.025	5.0E-04	7.5E-05	NR	low/300
Mercury	[d]	3.0E-03	cx	3.0E-04	c	0.07	2.1E-04	2.1E-05	kidney	high/1000

References [ref]:

H	Health Effects Summary Table (HEAST) (USEPA 1997a).
I	Integrated Risk Information System (IRIS) (USEPA 2013a).
P	Provisional Peer Reviewed Toxicity Values (PPRTV) (USEPA 2013b).
c	The chronic value is used if available.
mg/kg/day	Milligrams per kilogram per day.
NA	Not available or applicable.
RfD	Reference dose.
s	Value is based on use of a surrogate compound, as indicated.
x	The uncertainty factor for subchronic to chronic extrapolation was removed.
[a]	Toxicity values were obtained following USEPA recommended hierarchy (USEPA 2003a).
[b]	The oral-to-dermal adjustment factor (oral absorption efficiency) as used to calculate the dermal RfD values (USEPA 2004b). RfD (dermal) = RfD (oral) × Adjustment Factor (oral absorption efficiency).
[c]	Pyrene is used as a surrogate.
[d]	The toxicity values for mercuric chloride were used.

Table 6-18
Noncarcinogenic Toxicity Values for Inhalation Exposure
SWMU 39
Fort Stewart, Georgia

Constituent		Inhalation RfC (mg/m^3) [a] Subchronic	[ref]	Chronic	[ref]	Target Site/ Critical Effect	Confidence Level/ Uncertainty Factor
Volatile Organic Compounds							
Acetone		3.1E+01	c	3.1E+01	A	NA	NA
cis-1,2-Dichloroethene		NA		NA		NA	NA
Methylcyclohexane	[b]	1.8E+01	P	6.0E+00	I	reproductive/developmental	low to moderate/300
Semi Volatile Organic Compounds							
Acenaphthylene	[c]	NA		NA		NA	NA
Benz(a)anthracene		NA		NA		NA	NA
Benzo(a)pyrene		NA		NA		NA	NA
Benzo(b)fluoranthene		NA		NA		NA	NA
Benzo(g,h,i)perylene	[c]	NA		NA		NA	NA
Caprolactam		NA		NA		NA	NA
Dibenz(a,h)anthracene		NA		NA		NA	NA
Indeno(1,2,3-cd)pyrene		NA		NA		NA	NA
Phenanthrene	[c]	NA		NA		NA	NA
Inorganics							
Arsenic		1.5E-05	c	1.5E-05	C	NA	NA
Chromium		1.0E-04	c	1.0E-04	I	lung	medium/300
Mercury	[d]	3.0E-04	c	3.0E-04	I	NS	medium/30

References [ref]:

C	CalEPA, Toxicity Criteria database (CalEPA 2013).
I	Integrated Risk Information System (IRIS) (USEPA 2013a).
P	Provisional Peer Reviewed Toxicity Values (PPRTV) (USEPA 2013b).
c	The chronic value is used if available.
mg/m^3	Milligrams per cubic meter.
NA	Not available or applicable.
NS	Nervous system.
RfC	Reference Concentration.
[a]	Toxicity values were obtained following USEPA recommended hierarchy (USEPA 2003a).
[b]	Cyclohexane is used as the surrogate.
[c]	Pyrene is used as a surrogate.
[d]	The toxicity values for mercuric chloride were used.

Table 6-19
Carcinogenic Toxicity Values for Oral and Dermal Exposure
Human Health Risk Assessment
SWMU 39
Fort Stewart, Georgia

Constituent	Oral CSF [a] $(mg/kg/day)^{-1}$	[ref]	Adjustment Factor [b]	Dermal CSF [b] $(mg/kg/day)^{-1}$	Mutagenic	Tumor Site	Weight of Evidence Classification [c]
Volatile Organic Compounds							
Acetone	NA		1	NA		–	D
cis-1,2-Dichloroethene	NA		1	NA		–	D
Methylcyclohexane	NA		1	NA		–	NA
Semi Volatile Organic Compounds							
Acenaphthylene	NA		1	NA		–	D
Benz(a)anthracene	7.3E-01	E	1	7.3E-01	M	stomach	B2
Benzo(a)pyrene	7.3E+00	I	1	7.3E+00	M	stomach	B2
Benzo(b)fluoranthene	7.3E-01	E	1	7.3E-01	M	stomach	B2
Benzo(g,h,i)perylene	NA		1	NA		–	D
Caprolactam	NA		1	NA		–	NA
Dibenz(a,h)anthracene	7.3E+00	E	1	7.3E+00	M	stomach	B2
Indeno(1,2,3-cd)pyrene	7.3E-01	E	1	7.3E-01	M	stomach	B2
Phenanthrene	NA		1	NA		–	D
Inorganics							
Arsenic	1.5E+00	I	1	1.5E+00		skin	A
Chromium	5.0E-01	J	0.025	2.0E+01	M	–	D/A
Mercury	NA		0.07	NA		–	C

References [ref]:

E Environmental Criteria and Assessment Office as referenced in the USEPA Regional Screening Level Table (USEPA 2013e).
I Integrated Risk Information System (IRIS) (USEPA 2013a).

– Not applicable.
CSF Cancer Slope Factor.
$(mg/kg/day)^{-1}$ Inverse milligrams per kilogram per day (risk per unit dose).
M Carcinogen with a mutagenic mode of action.
NA Not available.

[a] Toxicity values were obtained following USEPA recommended hierarchy (USEPA 2003a).
[b] The oral-to-dermal adjustment factor (oral absorption efficiency) as used to calculate the dermal CSFd values (USEPA 2004b).
CSF (dermal) = CSF (oral) / Adjustment Factor (oral absorption efficiency)
[c] USEPA cancer weight-of-evidence categories are as follows:
Group A: Human Carcinogen (sufficient evidence of carcinogenicity in humans)
Group B: Probable Human Carcinogen
B1 - limited evidence of carcinogenicity in humans
B2 - sufficient evidence of carcinogenicity in animals with inadequate or lack of evidence in humans
Group C: Possible Human Carcinogen (limited evidence of carcinogenicity in animals and inadequate or lack of human data)
Group D: Not Classifiable as to Human Carcinogenicity (inadequate or no evidence)
Group E: Evidence of Noncarcinogenicity for Humans (no evidence of carcinogenicity in adequate studies)

Table 6-20
Carcinogenic Toxicity Values for Inhalation Exposure
SWMU 39
Fort Stewart, Georgia

Constituent	Inhalation Unit Risk (IUR) [a] $(mg/m^3)^{-1}$	[ref]	Mutagenic	Tumor Site	Weight of Evidence Classification [b]
Volatile Organic Compounds					
Acetone	NA			–	D
cis-1,2-Dichloroethene	NA			–	D
Methylcyclohexane	NA			–	NA
Semi Volatile Organic Compounds					
Acenaphthylene	NA			–	D
Benz(a)anthracene	1.1E-01	C	M	respiratory	B2
Benzo(a)pyrene	1.1E+00	C	M	respiratory	B2
Benzo(b)fluoranthene	1.1E-01	C	M	respiratory	B2
Benzo(g,h,i)perylene	NA			–	D
Caprolactam	NA			–	NA
Dibenz(a,h)anthracene	1.2E+00	C	M	respiratory	B2
Indeno(1,2,3-cd)pyrene	1.1E-01	C	M	respiratory	B2
Phenanthrene	NA			–	D
Inorganics					
Arsenic	4.3E+00	I		lung	A
Chromium	8.4E+00	S	M	lung	D/A
Mercury	NA			–	C

References [ref]:

C CalEPA, Toxicity Criteria database (CalEPA 2013).
I Integrated Risk Information System (IRIS) (USEPA 2013a).
S This is the IRIS IUR divided by 7. See the USEPA Regional Screening Level User's Guide for additional detail (USEPA 2013e).

– Not applicable.
$(mg/m^3)^{-1}$ Inverse milligrams per cubic meter.
M Carcinogen with a mutagenic mode of action.
NA Not available.

[a] Toxicity values were obtained following USEPA recommended hierarchy (USEPA 2003a).
[c] USEPA cancer weight-of-evidence categories are as follows:

Group A: Human Carcinogen (sufficient evidence of carcinogenicity in humans)
Group B: Probable Human Carcinogen
B2 - sufficient evidence of carcinogenicity in animals with inadequate or lack of evidence in humans
Group C: Possible Human Carcinogen (limited evidence of carcinogenicity in animals and inadequate or lack of human data)
Group D: Not Classifiable as to Human Carcinogenicity (inadequate or no evidence)

Table 6-21
Risk and Hazard Calculations for a Current Site Worker Receptor for Exposure to Surface Soil (0-1 foot)
SWMU 39
Fort Stewart, Georgia

Constituent	EPCs (mg/kg)		RAF [a]	ABSd	VF or PEF [b] (m³/kg)		CANCER RISK Route-Specific Risk Oral	Dermal	Inhalation	Calculated Risk	Percent Total ELCR	NON-CANCER HAZARD Route-Specific Hazard Oral	Dermal	Inhalation	Calculated Hazard	Percent Total HI
							ELCRo	ELCRd	ELCRi	ELCR		HQo	HQd	HQi	HI	
Methylcyclohexane	–		1	0	–		–	–	–	–		–	–	–	–	
Semi Volatile Organic Compounds																
Acenaphthylene	4.00E-01	m	1	0.13	6.33E+05	V	NA	NA	NA	–		1.3E-05	1.1E-05	NA	2.4E-05	1%
Benz(a)anthracene	5.00E-01	m	1	0.13	3.69E+10	P	1.3E-07	1.1E-07	1.2E-13	2.4E-07	7%	NA	NA	NA	–	
Benzo(a)pyrene	3.13E-01		1	0.13	3.69E+10	P	8.0E-07	6.9E-07	7.6E-13	1.5E-06	43%	NA	NA	NA	–	
Benzo(b)fluoranthene	4.10E-01		1	0.13	3.69E+10	P	1.0E-07	9.0E-08	1.0E-13	1.9E-07	6%	NA	NA	NA	–	
Benzo(g,h,i)perylene	4.80E-01	m	1	0.13	3.69E+10	P	NA	NA	NA	–		1.6E-05	1.3E-05	NA	2.9E-05	1%
Dibenz(a,h)anthracene	6.80E-02	m	1	0.13	3.69E+10	P	1.7E-07	1.5E-07	1.8E-13	3.2E-07	9%	NA	NA	NA	–	
Indeno(1,2,3-cd)pyrene	4.20E-01	m	1	0.13	3.69E+10	P	1.1E-07	9.2E-08	1.0E-13	2.0E-07	6%	NA	NA	NA	–	
Phenanthrene	2.10E-01	m	1	0.13	3.77E+06	V	NA	NA	NA	–		6.8E-06	5.9E-06	NA	1.3E-05	<1%
Inorganics																
Chromium	5.90E+00	m	1	0.00	3.69E+10	P	1.0E-06	–	1.1E-10	1.0E-06	30%	1.9E-03	–	3.7E-07	1.9E-03	97%
Total Risk or Hazard							Total ELCR			3E-06	100%	Total HI			0.002	100%

[a] RAF = Relative absorption factor for soil ingestion.
[b] Minimum of the volatilization factor ([VF] identified with [V]) and the particulate emission factor ([PEF] identified with [P]), derived on (Table 6-12) and (Table 6-11).

–	Not applicable.	HI	Hazard index (sum of the HQs).	mg/kg	Milligrams per kilogram.
ABSd	Dermal absorption fraction from soil.	HQ	Hazard quotient.	NA	Toxicity value not available or not applicable.
ELCR	Excess lifetime cancer risk.	m	EPC based on maximum.	PEF	Particulate emission factor.
EPCs	Exposure point concentration in soil.	m^3/kg	Cubic meters per kilogram.	VF	Volatilization factor.

Equations are presented in Table 6-9.
Receptor-specific exposure parameters are presented in Table 6-16.
Constituent-specific toxicity values are presented in Table 6-17 through 6-20.

ELCRo = (EPCs × RAF × 1 × 100 × 250 × 25 × CSFo) / (1,000,000 × 70 × 25,550)
ELCRd = (EPCs × 3,300 × 0.2 × ABSd × 250 × 25 × CSFa) / (1,000,000 × 70 × 25,550)
ELCRi = (EPCs × 8 × 0.042 ×250 × 25 × URF) / ([VF or PEF] × 25,550)

HQo = (EPCs × RAF × 1 × 100 × 250 × 25) / (1,000,000 × 70 × 9,125 × RfDo)
HQd = (EPCs × 3,300 × 0.2 × ABSd × 250 × 25) / (1,000,000 × 70 × 9,125 × RfDa)
HQi = (EPCs × 8 × 0.042 × 250 × 25) / ([VF or PEF] × 9,125 × RfC)

Table 6-22
Risk and Hazard Calculations for a Hypothetical Future Site Worker Receptor for Exposure to Subsurface Soil (1-8 feet)
SWMU 39
Fort Stewart, Georgia

Constituent	EPCs (mg/kg)		RAF [a]	ABSd	VF or PEF [b] (m^3/kg)		CANCER RISK Route-Specific Risk Oral	Dermal	Inhalation	Calculated Risk	Percent Total ELCR	NON-CANCER HAZARD Route-Specific Hazard Oral	Dermal	Inhalation	Calculated Hazard	Percent Total HI
							ELCRo	ELCRd	ELCRi	ELCR		HQo	HQd	HQi	HI	
Volatile Organic Compounds																
Methylcyclohexane	1.00E-03	m	1	0	1.06E+04	V	NA	NA	NA	–		NA	NA	3.6E-09	3.6E-09	<1%
Semi Volatile Organic Compounds																
Acenaphthylene	2.00E-01	m	1	0.13	6.33E+05	V	NA	NA	NA	–		6.5E-06	5.6E-06	NA	1.2E-05	<1%
Benz(a)anthracene	4.30E-01	m	1	0.13	3.69E+10	P	1.1E-07	9.4E-08	1.0E-13	2.0E-07	4%	NA	NA	NA	–	
Benzo(a)pyrene	6.80E-01	m	1	0.13	3.69E+10	P	1.7E-06	1.5E-06	1.7E-12	3.2E-06	64%	NA	NA	NA	–	
Benzo(b)fluoranthene	1.88E-01		1	0.13	3.69E+10	P	4.8E-08	4.1E-08	4.6E-14	8.9E-08	2%	NA	NA	NA	–	
Benzo(g,h,i)perylene	3.70E-01	m	1	0.13	3.69E+10	P	NA	NA	NA	–		1.2E-05	1.0E-05	NA	2.2E-05	<1%
Dibenz(a,h)anthracene	1.00E-01	m	1	0.13	3.69E+10	P	2.6E-07	2.2E-07	2.7E-13	4.7E-07	9%	NA	NA	NA	–	
Indeno(1,2,3-cd)pyrene	3.30E-01	m	1	0.13	3.69E+10	P	8.4E-08	7.2E-08	8.0E-14	1.6E-07	3%	NA	NA	NA	–	
Phenanthrene	6.70E-02	m	1	0.13	3.77E+06	V	NA	NA	NA	–		2.2E-06	1.9E-06	NA	4.1E-06	<1%
Inorganics																
Arsenic	5.36E-01		0.6	0.03	3.69E+10	P	1.7E-07	5.6E-08	5.1E-12	2.2E-07	4%	1.0E-03	3.5E-04	2.2E-07	1.4E-03	51%
Chromium	3.96E+00		1	0	3.69E+10	P	6.9E-07	–	7.3E-11	6.9E-07	14%	1.3E-03	–	2.4E-07	1.3E-03	47%
Total Risk or Hazard							Total ELCR			5E-06	100%	Total HI			0.003	100%

[a] RAF = Relative absorption factor for soil ingestion.
[b] Minimum of the volatilization factor ([VF] identified with [V]) and the particulate emission factor ([PEF] identified with [P]), derived on (Table 6-12) and (Table 6-11).

–	Not applicable.	HQ	Hazard quotient.	PEF	Particulate emission factor.
ABSd	Dermal absorption fraction from soil.	m	EPC based on maximum.	VF	Volatilization factor.
ELCR	Excess lifetime cancer risk.	m^3/kg	Cubic meters per kilogram.		
EPCs	Exposure point concentration in soil.	NA	Toxicity value not available or not applicable.		

Equations are presented in Table 6-9.
Receptor-specific exposure parameters are presented in Table 6-16.
Constituent-specific toxicity values are presented in Table 6-17 through 6-20.

ELCRo = (EPCs × RAF × 1 × 100 × 250 × 25 × CSFo) / (1,000,000 × 70 × 25,550)
ELCRd = (EPCs × 3,300 × 0.2 × ABSd × 250 × 25 × CSFa) / (1,000,000 × 70 × 25,550)
ELCRi = (EPCs × 8 × 0.042 ×250 × 25 × URF) / ([VF or PEF] × 25,550)

HQo = (EPCs × RAF × 1 × 100 × 250 × 25) / (1,000,000 × 70 × 9,125 × RfDo)
HQd = (EPCs × 3,300 × 0.2 × ABSd × 250 × 25) / (1,000,000 × 70 × 9,125 × RfDa)
HQi = (EPCs × 8 × 0.042 × 250 × 25) / ([VF or PEF] × 9,125 × RfC)

Table 6-23
Risk and Hazard Calculations for a Hypothetical Future Construction Worker Receptor for Exposure to Soil (0-8 feet)
SWMU 39
Fort Stewart, Georgia

Constituent	EPCs (mg/kg)		RAF [a]	ABSd	VF or PEF [b] (m³/kg)		CANCER RISK Route-Specific Risk Oral	Dermal	Inhalation	Calculated Risk	Percent Total ELCR	NON-CANCER HAZARD Route-Specific Hazard Oral	Dermal	Inhalation	Calculated Hazard	Percent Total HI
							ELCRo	ELCRd	ELCRi	ELCR		HQo	HQd	HQi	HI	
Volatile Organic Compounds																
Methylcyclohexane	1.00E-03	m	1	0	1.40E+02	V	NA	NA	NA	–		NA	NA	4.7E-08	4.7E-08	<1%
Semi Volatile Organic Compounds																
Acenaphthylene	1.03E-01		1	0.13	8.34E+03	V	NA	NA	NA	–		5.8E-07	2.2E-07	NA	8.0E-07	<1%
Benz(a)anthracene	1.46E-01		1	0.13	1.46E+07	P	2.6E-09	1.0E-09	1.9E-12	3.6E-09	3%	NA	NA	NA	–	
Benzo(a)pyrene	1.76E-01		1	0.13	1.46E+07	P	3.1E-08	1.2E-08	2.2E-11	4.3E-08	32%	NA	NA	NA	–	
Benzo(b)fluoranthene	2.19E-01		1	0.13	1.46E+07	P	3.8E-09	1.5E-09	2.8E-12	5.3E-09	4%	NA	NA	NA	–	
Benzo(g,h,i)perylene	1.30E-01		1	0.13	1.46E+07	P	NA	NA	NA	–		7.3E-07	2.8E-07	NA	1.0E-06	<1%
Dibenz(a,h)anthracene	6.34E-02		1	0.13	1.46E+07	P	1.1E-08	4.3E-09	8.8E-12	1.5E-08	12%	NA	NA	NA	–	
Indeno(1,2,3-cd)pyrene	1.14E-01		1	0.13	1.46E+07	P	2.0E-09	7.8E-10	1.5E-12	2.8E-09	2%	NA	NA	NA	–	
Phenanthrene	6.86E-02		1	0.13	4.97E+04	V	NA	NA	NA	–		3.8E-07	1.5E-07	NA	5.3E-07	<1%
Inorganics																
Arsenic	5.26E-01		0.6	0.03	1.46E+07	P	1.1E-08	1.7E-09	2.6E-10	1.3E-08	10%	1.8E-03	2.6E-04	2.8E-04	2.3E-03	79%
Chromium	3.77E+00		1	0	1.46E+07	P	4.5E-08	–	3.7E-09	4.9E-08	37%	3.2E-04	–	3.1E-04	6.2E-04	21%
Total Risk or Hazard							Total ELCR			1E-07	100%	Total HI			0.003	100%

[a] RAF = Relative absorption factor for soil ingestion.
[b] Minimum of the volatilization factor ([VF] identified with [V]) and the particulate emission factor ([PEF] identified with [P]), derived on (Table 6-12) and (Table 6-11).

–	Not applicable.	HI	Hazard index (sum of the HQs).	mg/kg	Milligrams per kilogram.
ABSd	Dermal absorption fraction from soil.	HQ	Hazard quotient.	NA	Toxicity value not available or not applicable.
ELCR	Excess lifetime cancer risk.	m	EPC based on maximum.	PEF	Particulate emission factor.
EPCs	Exposure point concentration in soil.	m^3/kg	Cubic meters per kilogram.	VF	Volatilization factor.

Equations are presented in Table 6-9.
Receptor-specific exposure parameters are presented in Table 6-16.
Constituent-specific toxicity values are presented in Table 6-17 through 6-20.

ELCRo = (EPCs × RAF × 1 × 330 × 130 × 1 × CSFo) / (1,000,000 × 70 × 25,550)
ELCRd = (EPCs × 3,300 × 0.3 × ABSd × 130 × 1 × CSFa) / (1,000,000 × 70 × 25,550)
ELCRi = (EPCs × 8 × 0.042 ×130 × 1 × URF) / ([VF or PEF] × 25,550)

HQo = (EPCs × RAF × 1 × 330 × 130 × 1) / (1,000,000 × 70 × 365 × RfDo)
HQd = (EPCs × 3,300 × 0.3 × ABSd × 130 × 1) / (1,000,000 × 70 × 365 × RfDa)
HQi = (EPCs × 8 × 0.042 × 130 × 1) / ([VF or PEF] × 365 × RfC)

Table 6-24
Risk Calculations for a Hypothetical Adolescent Trespasser Receptor for Exposure to Surface Soil (0-1 foot)
SWMU 39
Fort Stewart, Georgia

							CANCER RISK						TOTAL CANCER RISK					NON-CANCER HAZARD				
							Age-Specific Risk for Constituents with a Mutagenic Mode of Action (MOA)			Age-Specific Risk for non-MOA Carcinogenic Constituents			Route-Specific Risk					Route-Specific Hazard				
	EPCs		RAF [a]	ABSd	PEF [b]		6 - 16 years			6 - 16 years			6 - 16 years			Total	Percent Total	6-16 years			Total	Percent Total
Constituent	(mg/kg)				(m^3/kg)		Oral	Dermal	Inhalation	Oral	Dermal	Inhalation	Oral	Dermal	Inhalation	ELCR	ELCR	Oral	Dermal	Inhalation	Hazard	HI
							ELCRo	ELCRd	ELCRi	ELCRo	ELCRd	ELCRi	ELCRo	ELCRd	ELCRi			HQo	HQd	HQi		
Semi Volatile Organic Compounds																						
Acenaphthylene	4.00E-01	m	1	0.13	6.33E+05	V	NA	NA	NA	NA	NA	NA	NA	NA	NA	NA		4.1E-06	8.8E-06	NA	1.3E-05	2%
Benz(a)anthracene	5.00E-01	m	1	0.13	3.69E+10	P	4.8E-08	1.0E-07	7.3E-15	NA	NA	NA	4.8E-08	1.0E-07	7.3E-15	1.5E-07	8%	NA	NA	NA	NA	
Benzo(a)pyrene	3.13E-01		1	0.13	3.69E+10	P	3.0E-07	6.5E-07	4.6E-14	NA	NA	NA	3.0E-07	6.5E-07	4.6E-14	9.4E-07	49%	NA	NA	NA	NA	
Benzo(b)fluoranthene	4.10E-01		1	0.13	3.69E+10	P	3.9E-08	8.5E-08	6.0E-15	NA	NA	NA	3.9E-08	8.5E-08	6.0E-15	1.2E-07	6%	NA	NA	NA	NA	
Benzo(g,h,i)perylene	4.80E-01	m	1	0.13	3.69E+10	P	NA	NA	NA	NA	NA	NA	NA	NA	NA	NA		4.9E-06	1.1E-05	NA	1.5E-05	2%
Dibenz(a,h)anthracene	6.80E-02	m	1	0.13	3.69E+10	P	6.5E-08	1.4E-07	1.1E-14	NA	NA	NA	6.5E-08	1.4E-07	1.1E-14	2.1E-07	11%	NA	NA	NA	NA	
Indeno(1,2,3-cd)pyrene	4.20E-01	m	1	0.13	3.69E+10	P	4.0E-08	8.7E-08	6.1E-15	NA	NA	NA	4.0E-08	8.7E-08	6.1E-15	1.3E-07	7%	NA	NA	NA	NA	
Phenanthrene	2.10E-01	m	1	0.13	3.77E+06	V	NA	NA	NA	NA	NA	NA	NA	NA	NA	NA		2.1E-06	4.6E-06	NA	6.8E-06	1%
Inorganics																						
Chromium	5.90E+00	m	1	0	3.69E+10	P	3.8E-07	NA	6.6E-12	NA	NA	NA	3.8E-07	NA	6.6E-12	3.8E-07	20%	6.0E-04	NA	1.8E-08	6.0E-04	94%
	Total by pathway						9E-07	1E-06	7E-12	NA	NA	NA	9E-07	1E-06	7E-12			0.0006	0.00002	2E-08		
													Total Resident Risk			**2E-06**		**Total Resident Hazard**			**0.0006**	

[a] RAF = Relative absorption factor for soil ingestion.
[b] Minimum of the volatilization factor ([VF] identified with [V]) and the particulate emission factor ([PEF] identified with [P]), derived on (Table 6-12) and (Table 6-11).

ELCR	Excess lifetime cancer risk.	m	EPC based on maximum.
EPCs	Exposure point concentration in soil.	m^3/kg	Meter cubed per kilogram.
HI	Hazard Index.	mg/kg	Milligram per kilogram.
HQ	Hazard Quotient.	NA	Not applicable.

Equations are presented in Table 6-10.
Receptor-specific exposure parameters are presented in Table 6-16.
Constituent-specific toxicity values are presented in Table 6-17 through 6-20.

Table 6-25
Risk Calculations for a Hypothetical Adolescent Trespasser Receptor for Exposure to Subsurface Soil (1-8 feet)
SWMU 39
Fort Stewart, Georgia

							CANCER RISK						TOTAL CANCER RISK					NON-CANCER HAZARD				
							Age-Specific Risk for Constituents with a Mutagenic Mode of Action (MOA)			Age-Specific Risk for non-MOA Carcinogenic Constituents			Route-Specific Risk					Route-Specific Hazard				
	EPCs		RAF [a]	ABSd	PEF [b]		6 - 16 years			6 - 16 years			6 - 16 years			Total	Percent Total	6-16 years			Total	Percent Total
Constituent	(mg/kg)				(m^3/kg)		Oral	Dermal	Inhalation	Oral	Dermal	Inhalation	Oral	Dermal	Inhalation	ELCR	ELCR	Oral	Dermal	Inhalation	Hazard	HI
							ELCRo	ELCRd	ELCRi	ELCRo	ELCRd	ELCRi	ELCRo	ELCRd	ELCRi			HQo	HQd	HQi		
Volatile Organic Compounds																						
Methylcyclohexane	1.00E-03	m	1	0	1.06E+04	V	NA	NA	NA	NA	NA	NA	NA	NA	NA	NA		NA	NA	1.8E-10	1.8E-10	<1%
Semi Volatile Organic Compounds																						
Acenaphthylene	2.00E-01	m	1	0.13	6.33E+05	V	NA	NA	NA	NA	NA	NA	NA	NA	NA	NA		2.0E-06	4.4E-06	NA	6.4E-06	<1%
Benz(a)anthracene	4.30E-01	m	1	0.13	3.69E+10	P	4.1E-08	8.9E-08	6.3E-15	NA	NA	NA	4.1E-08	8.9E-08	6.3E-15	1.3E-07	4%	NA	NA	NA	NA	
Benzo(a)pyrene	6.80E-01	m	1	0.13	3.69E+10	P	6.5E-07	1.4E-06	9.9E-14	NA	NA	NA	6.5E-07	1.4E-06	9.9E-14	2.1E-06	70%	NA	NA	NA	NA	
Benzo(b)fluoranthene	1.88E-01		1	0.13	3.69E+10	P	1.8E-08	3.9E-08	2.7E-15	NA	NA	NA	1.8E-08	3.9E-08	2.7E-15	5.7E-08	2%	NA	NA	NA	NA	
Benzo(g,h,i)perylene	3.70E-01	m	1	0.13	3.69E+10	P	NA	NA	NA	NA	NA	NA	NA	NA	NA	NA		3.8E-06	8.1E-06	NA	1.2E-05	1%
Dibenz(a,h)anthracene	1.00E-01	m	1	0.13	3.69E+10	P	9.5E-08	2.1E-07	1.6E-14	NA	NA	NA	9.5E-08	2.1E-07	1.6E-14	3.0E-07	10%	NA	NA	NA	NA	
Indeno(1,2,3-cd)pyrene	3.30E-01	m	1	0.13	3.69E+10	P	3.1E-08	6.8E-08	4.8E-15	NA	NA	NA	3.1E-08	6.8E-08	4.8E-15	1.0E-07	3%	NA	NA	NA	NA	
Phenanthrene	6.70E-02	m	1	0.13	3.77E+06	V	NA	NA	NA	NA	NA	NA	NA	NA	NA	NA		6.8E-07	1.5E-06	NA	2.2E-06	<1%
Inorganics																						
Arsenic	5.36E-01		0.6	0.03	3.69E+10	P	NA	NA	NA	2.1E-08	1.7E-08	1.0E-13	2.1E-08	1.7E-08	1.0E-13	3.8E-08	1%	3.3E-04	2.7E-04	1.1E-08	6.0E-04	59%
Chromium	3.96E+00		1	0	3.69E+10	P	2.6E-07	NA	4.4E-12	NA	NA	NA	2.6E-07	NA	4.4E-12	2.6E-07	9%	4.0E-04	NA	1.2E-08	4.0E-04	39%
	Total by pathway						1E-06	2E-06	5E-12	2E-08	2E-08	1E-13	1E-06	2E-06	5E-12			0.0007	0.0003	2E-08		
													Total Resident Risk			**3E-06**		**Total Resident Hazard**			**0.001**	

[a] RAF = Relative absorption factor for soil ingestion.
[b] Minimum of the volatilization factor ([VF] identified with [V]) and the particulate emission factor ([PEF] identified with [P]), derived on (Table 6-12) and (Table 6-11).

ELCR	Excess lifetime cancer risk.	m	EPC based on maximum.
EPCs	Exposure point concentration in soil.	m^3/kg	Meter cubed per kilogram.
HI	Hazard Index.	mg/kg	Milligram per kilogram.
HQ	Hazard Quotient.	NA	Not applicable.

Equations are presented in Table 6-10.
Receptor-specific exposure parameters are presented in Table 6-16.
Constituent-specific toxicity values are presented in Table 6-17 through 6-20.

Table 6-26
Risk and Hazard Calculations for a Hypothetical Adolescent Trespasser Receptor for Exposure to Sediment while Wading
SWMU 39
Fort Stewart, Georgia

Constituent	EPCs (mg/kg)		RAF [a]	ABSd	Cancer Risk: Route-Specific Risk: Oral (ELCRo)	Cancer Risk: Route-Specific Risk: Dermal (ELCRd)	Cancer Risk: Total ELCR	Percent Total ELCR	NON-CANCER HAZARD: Route-Specific Hazard: Oral (HQo)	NON-CANCER HAZARD: Route-Specific Hazard: Dermal (HQd)	NON-CANCER HAZARD: Total Hazard (HI)	Percent Total HI
Semi Volatile Organic Compounds												
Phenanthrene	1.40E-01	m	1	0.13	NA	NA	NA		1.4E-06	3.1E-06	4.5E-06	<1%
Inorganics												
Arsenic	9.42E+00		0.6	0.03	3.7E-07	3.1E-07	6.8E-07	73%	5.7E-03	4.8E-03	1.1E-02	96%
Chromium	3.88E+00		1	0	2.5E-07	NA	2.5E-07	27%	3.9E-04	NA	3.9E-04	4%
Total Risk or Hazard					Total ELCR		9E-07	100%	Total HI		0.01	100%

[a] RAF = Relative absorption factor for soil ingestion.

ELCR	Excess lifetime cancer risk.	HQ	Hazard Quotient.	NA	Toxicity value not available.
EPCs	Exposure point concentration in sediment.	m	EPC based on maximum.		
HI	Hazard Index.	mg/kg	Milligram per kilogram.		

Equations are presented in Table 6-15.
Receptor-specific exposure parameters are presented in Table 6-16.
Constituent-specific toxicity values are presented in Table 6-17 through 6-20.

Table 6-27a
Risk and Hazard Calculations for a Hypothetical Adolescent Tresspasser Receptor for Exposure to Surface Water while Wading
SWMU 39
Fort Stewart, Georgia

Constituent	EPCsw (mg/L)		DA [a] (L/cm²/day)		VFsw (L/m³)	CANCER RISK Route-Specific Risk Oral	Dermal	Inhalation	Calculated Risk	NON-CANCER HAZARD Route-Specific Hazard Oral	Dermal	Inhalation	Calculated Hazard	Percent Total HI
						ELCRo	ELCRd	ELCRi	ELCR	HQo	HQd	HQi	HI	
Volatile Organic Compounds														
Acetone	1.40E-02	m	1.25E-06	[2]	7.30E-04	NA	NA	NA	NA	9.5E-07	4.9E-07	7.5E-09	1.4E-06	<1%
cis-1,2-Dichloroethene	1.10E-03	m	2.98E-05	[2]	1.58E-03	NA	NA	NA	NA	3.3E-05	4.2E-04	NA	4.5E-04	66%
Semi Volatile Organic Compounds														
Caprolactam	2.60E-03	m	2.90E-06	[2]	6.50E-07	NA	NA	NA	NA	3.2E-07	3.8E-07	NA	7.0E-07	<1%
Inorganics														
Mercury	8.40E-05	m	2.00E-06	[0]	1.11E-03	NA	NA	NA	NA	1.7E-05	2.0E-04	7.1E-06	2.3E-04	34%
Total Risk or Hazard						Total ELCR			NA	Total HI			0.0007	100%

[a] The dermal absorption factor (DA) was calculated using Equation [0], [1], or [2] as indicated, from Table 6-13a.

avg	Average.	HI	Hazard index (sum of the HQs).	m	EPC based on maximum.
cm/hr	Centimeters per hour.	HQ	Hazard quotient.	mg/L	Milligrams per liter.
ELCR	Excess lifetime cancer risk.	L/cm²/day	Liters per square centimeter per day.	NA	Toxicity value not available or not applicabl
EPCsw	Exposure point concentration in surface water.	L/m^3	Liters per cubic meter.	VFsw	Volatilization factor for surface water.

Equations are presented in Table 6-13a.
Receptor-specific exposure parameters are presented in Table 6-16 and Table 6-13b.
Constituent-specific toxicity values are presented in Table 6-17 through 6-20.
Mean annual wind speed (m/sec) for Savannah, Georgia (NOAA 1998). 3.6

ELCRo = (EPCsw × 0.005 × 2 × 100 × 10 × CSFo) / (45 × 25,550)
ELCRd = (EPCsw × DA × 4,169 × 100 × 10 × CSFa) / (45 × 25,550)
ELCRi = (EPCsw × VFsw × 2 × 0.042 × 100 × 10 × IUR) / (25,550)

HQo = (EPCsw × 0.005 × 2 × 100 × 10) / (45 × 3,650 × RfDo)
HQd = (EPCsw × DA × 4,169 × 100 × 10) / (45 × 3,650 × RfDa)
HQi = (EPCsw × VFsw × 2 × 0.042 × 100 × 10) / (3,650 × RfC)

Table 6-27b
Hypothetical Adolescent Trespasser Exposure Associated with Lead in Surface Water
SWMU 39
Fort Stewart, Georgia

Receptor	Maximum Lead Concentration (PbW)(1)	Water Ingestion Rate (IRw)	Exposure Frequency (EF)	Predicted Blood Lead Level (2)	Predicted Fetal Blood Lead Level (3)	Target PbB Level of Concern (4)	Probability Blood Level >10 µg/dL
	µg/L	L/day	days/year	µg/dL	µg/dL	µg/dL	%
Hypothetical Adolescent Trespasser	6.24	0.010	100	1.0	2.4	10	0.002%

Notes:

(1) Maximum lead concentration used as the exposure point concentration in groundwater(USEPA 2003b).

(2) $PbB_{receptor,central}$ = Predicted receptor blood lead level (µg/dL)

$PbB_{recptor,central} = (PbB_{receptor,baseline} + [(PbW \times BKSF \times IRw \times AFw \times EF)/AT])$

$PbB_{receptor,baseline}$ = Typical blood lead concentration in adults (µg/dL) =	1.0	(USEPA 2009)
GSDi = Geometric standard deviation of the PbB =	1.8	(USEPA 2009)
BKSF = Biokinetic slope factor (µg/dL per µg/day) =	0.4	(USEPA 2003b)
IRw = Average water ingestion rate (L/day) =	0.010	Professional judgment
AFw = Absorption fraction from water (unitless) =	0.2	(USEPA 2003b)
EF = Exposure frequency (days/year) =	100	(GAEPD 2014)
AT = Averaging time (days/year) =	365	(USEPA 1989;1991)

(3) $PbB_{fetal,0.95}$ = Predicted fetal blood lead level (µg/dL)

$PbB_{fetal,0.95} = R_{f/m} \times (GSD_i)^{1.645} \times PbB_{reptor,central}$

$R_{f/m}$ = fetal/maternal blood lead level ratio (unitless) =	0.9	(USEPA 2009)

(4) Childhood exposure is limited to a blood lead concentration no greater than 10 µg/dL (USEPA 2003b).

L/day	Liter per day.
µg/day	Microgram per day.
µg/dL	Microgram per deciliter.
µg/dL	Microgram per liter.

Table 6-28
Risk Calculations for a Hypothetical Future Child Resident Receptor for Exposure to Surface Soil (0-1 foot)
SWMU 39
Fort Stewart, Georgia

							CANCER RISK									TOTAL CANCER RISK				Percent	NON-CANCER HAZARD				Percent
							Age-Specific Risk for Constituents with a Mutagenic Mode of Action (MOA)						Age-Specific Risk for non-Mutagenic MOA Carcinogenic Constituents			Route-Specific Risk			Total	Total	Route-Specific Hazard			Total	Total
							0 - 2 years			2 - 6 years			0 - 6 years			0 - 6 years					0 - 6 years				
Constituent	EPCs (mg/kg)		RAF [a]	ABSd	PEF [b] (m^3/kg)		Oral	Dermal	Inhalation	Oral	Dermal	Inhalation	Oral	Dermal	Inhalation	Oral	Dermal	Inhalation	ELCR	ELCR	Oral	Dermal	Inhalation	Hazard	HI
							ELCRo	ELCRd	ELCRi	ELCRo	ELCRd	ELCRi	ELCRo	ELCRd	ELCRi	ELCRo	ELCRd	ELCRi			HQo	HQd	HQi		
Semi Volatile Organic Compounds																									
Acenaphthylene	4.00E-01	m	1	0.13	6.33E+05	V	NA	NA	NA	NA	NA	NA	NA	NA	NA	NA	NA	NA	NA		1.7E-04	6.2E-05	NA	2.3E-04	<1%
Benz(a)anthracene	5.00E-01	m	1	0.13	3.69E+10	P	1.3E-06	4.9E-07	4.1E-13	8.0E-07	2.9E-07	2.4E-13	NA	NA	NA	2.1E-06	7.8E-07	6.5E-13	2.9E-06	6%	NA	NA	NA	NA	
Benzo(a)pyrene	3.13E-01		1	0.13	3.69E+10	P	8.3E-06	3.0E-06	2.6E-12	5.0E-06	1.8E-06	1.5E-12	NA	NA	NA	1.3E-05	4.9E-06	4.1E-12	1.8E-05	39%	NA	NA	NA	NA	
Benzo(b)fluoranthene	4.10E-01		1	0.13	3.69E+10	P	1.1E-06	4.0E-07	3.3E-13	6.6E-07	2.4E-07	2.0E-13	NA	NA	NA	1.7E-06	6.4E-07	5.4E-13	2.4E-06	5%	NA	NA	NA	NA	
Benzo(g,h,i)perylene	4.80E-01	m	1	0.13	3.69E+10	P	NA	NA	NA	NA	NA	NA	NA	NA	NA	NA	NA	NA	NA		2.0E-04	7.4E-05	NA	2.8E-04	<1%
Dibenz(a,h)anthracene	6.80E-02	m	1	0.13	3.69E+10	P	1.8E-06	6.6E-07	6.1E-13	1.1E-06	4.0E-07	3.6E-13	NA	NA	NA	2.9E-06	1.1E-06	9.7E-13	4.0E-06	8%	NA	NA	NA	NA	
Indeno(1,2,3-cd)pyrene	4.20E-01	m	1	0.13	3.69E+10	P	1.1E-06	4.1E-07	3.4E-13	6.7E-07	2.4E-07	2.1E-13	NA	NA	NA	1.8E-06	6.5E-07	5.5E-13	2.4E-06	5%	NA	NA	NA	NA	
Phenanthrene	2.10E-01	m	1	0.13	3.77E+06	V	NA	NA	NA	NA	NA	NA	NA	NA	NA	NA	NA	NA	NA		8.9E-05	3.3E-05	NA	1.2E-04	<1%
Inorganics																									
Chromium	5.90E+00	m	1	0	3.69E+10	P	1.1E-05	NA	3.7E-10	6.5E-06	NA	2.2E-10	NA	NA	NA	1.7E-05	NA	5.9E-10	1.7E-05	37%	2.5E-02	NA	1.5E-06	2.5E-02	84%
	Total by pathway						2E-05	5E-06	4E-10	1E-05	3E-06	2E-10	NA	NA	NA	4E-05	8E-06	6E-10			0.03	0.0002	0.000002		
				Total by Age				3E-05			2E-05			NA										0.03	
																Total Child Resident Risk			**5E-05**		**Total Child Resident Hazard**			**0.03**	

[a] RAF = Relative absorption factor for soil ingestion.
[b] Minimum of the volatilization factor ([VF] identified with [V]) and the particulate emission factor ([PEF] identified with [P]), derived on (Table 6-12) and (Table 6-11).

ELCR	Excess lifetime cancer risk.	m	EPC based on maximum.
EPCs	Exposure point concentration in soil.	m^3/kg	Meter cubed per kilogram.
HI	Hazard Index.	mg/kg	Milligram per kilogram.
HQ	Hazard Quotient.	NA	Not applicable.

Equations are presented in Table 6-10.
Receptor-specific exposure parameters are presented in Table 6-16.
Constituent-specific toxicity values are presented in Table 6-17 through 6-20.

Table 6-29
Risk and Hazard Calculations for a Hypothetical Future Child Resident Receptor for Exposure to Subsurface Soil (1-8 feet)
SWMU 39
Fort Stewart, Georgia

							CANCER RISK									TOTAL CANCER RISK				Percent	NON-CANCER HAZARD				Percent
							Age-Specific Risk for Constituents with a Mutagenic Mode of Action (MOA)						Age-Specific Risk for non-Mutagenic MOA Carcinogenic Constituents			Route-Specific Risk			Total	Total	Route-Specific Hazard			Total	Total
							0 - 2 years			2 - 6 years			0 - 6 years			0 - 6 years					0 - 6 years				
Constituent	EPCs (mg/kg)		RAF [a]	ABSd	PEF [b] (m^3/kg)		Oral	Dermal	Inhalation	Oral	Dermal	Inhalation	Oral	Dermal	Inhalation	Oral	Dermal	Inhalation	ELCR	ELCR	Oral	Dermal	Inhalation	Hazard	HI
							ELCRo	ELCRd	ELCRi	ELCRo	ELCRd	ELCRi	ELCRo	ELCRd	ELCRi	ELCRo	ELCRd	ELCRi			HQo	HQd	HQi		
Volatile Organic Compounds																									
Methylcyclohexane	1.00E-03	m	1	0	1.06E+04	V	NA	NA	NA	NA	NA	NA	NA	NA	NA	NA	NA	NA	NA		NA	NA	1.5E-08	1.5E-08	<1%
Semi Volatile Organic Compounds																									
Acenaphthylene	2.00E-01	m	1	0.13	6.33E+05	V	NA	NA	NA	NA	NA	NA	NA	NA	NA	NA	NA	NA	NA		8.5E-05	3.1E-05	NA	1.2E-04	<1%
Benz(a)anthracene	4.30E-01	m	1	0.13	3.69E+10	P	1.1E-06	4.2E-07	3.5E-13	6.9E-07	2.5E-07	2.1E-13	NA	NA	NA	1.8E-06	6.7E-07	5.6E-13	2.5E-06	4%	NA	NA	NA	NA	
Benzo(a)pyrene	6.80E-01	m	1	0.13	3.69E+10	P	1.8E-05	6.6E-06	5.6E-12	1.1E-05	4.0E-06	3.3E-12	NA	NA	NA	2.9E-05	1.1E-05	8.9E-12	4.0E-05	63%	NA	NA	NA	NA	
Benzo(b)fluoranthene	1.88E-01		1	0.13	3.69E+10	P	5.0E-07	1.8E-07	1.5E-13	3.0E-07	1.1E-07	9.2E-14	NA	NA	NA	8.0E-07	2.9E-07	2.5E-13	1.1E-06	2%	NA	NA	NA	NA	
Benzo(g,h,i)perylene	3.70E-01	m	1	0.13	3.69E+10	P	NA	NA	NA	NA	NA	NA	NA	NA	NA	NA	NA	NA	NA		1.6E-04	5.7E-05	NA	2.2E-04	<1%
Dibenz(a,h)anthracene	1.00E-01	m	1	0.13	3.69E+10	P	2.7E-06	9.7E-07	8.9E-13	1.6E-06	5.8E-07	5.3E-13	NA	NA	NA	4.3E-06	1.6E-06	1.4E-12	5.8E-06	9%	NA	NA	NA	NA	
Indeno(1,2,3-cd)pyrene	3.30E-01	m	1	0.13	3.69E+10	P	8.8E-07	3.2E-07	2.7E-13	5.3E-07	1.9E-07	1.6E-13	NA	NA	NA	1.4E-06	5.1E-07	4.3E-13	1.9E-06	3%	NA	NA	NA	NA	
Phenanthrene	6.70E-02	m	1	0.13	3.77E+06	V	NA	NA	NA	NA	NA	NA	NA	NA	NA	NA	NA	NA	NA		2.9E-05	1.0E-05	NA	3.9E-05	<1%
Inorganics																									
Arsenic	5.36E-01		0.6	0.03	3.69E+10	P	NA	NA	NA	NA	NA	NA	5.3E-07	7.4E-08	5.1E-12	5.3E-07	7.4E-08	5.1E-12	6.0E-07	<1%	1.4E-02	1.9E-03	9.3E-07	1.6E-02	52%
Chromium	3.96E+00		1	0	3.69E+10	P	7.2E-06	NA	2.5E-10	4.3E-06	NA	1.5E-10	NA	NA	NA	1.2E-05	NA	3.9E-10	1.2E-05	18%	1.7E-02	NA	1.0E-06	1.7E-02	56%
	Total by pathway						3E-05	8E-06	3E-10	2E-05	5E-06	2E-10	5E-07	7E-08	5E-12	5E-05	1E-05	4E-10			0.03	0.002	0.000002		
				Total by Age				4E-05			2E-05			6E-07										0.03	
																Total Child Resident Risk			**6E-05**		**Total Child Resident Hazard**			**0.03**	

[a] RAF = Relative absorption factor for soil ingestion.
[b] Minimum of the volatilization factor ([VF] identified with [V]) and the particulate emission factor ([PEF] identified with [P]), derived on (Table 6-12) and (Table 6-11).

ELCR	Excess lifetime cancer risk.	m	EPC based on maximum.
EPCs	Exposure point concentration in soil.	m^3/kg	Meter cubed per kilogram.
HI	Hazard Index.	mg/kg	Milligram per kilogram.
HQ	Hazard Quotient.	NA	Not applicable.

Equations are presented in Table 6-9.
Receptor-specific exposure parameters are presented in Table 6-16.
Constituent-specific toxicity values are presented in Table 6-17 through 6-20.

Table 6-30
Risk and Hazard Calculations for a Hypothetical Future Adult Resident Receptor for Exposure to Surface Soil (0-1 foot)
SWMU 39
Fort Stewart, Georgia

Constituent	EPCs (mg/kg)		RAF [a]	ABSd	PEF [b] (m^3/kg)		TOTAL CANCER RISK Route-Specific Risk 30 years Oral	Dermal	Inhalation	Total ELCR	Percent Total ELCR	NON-CANCER HAZARD Route-Specific Hazard 30 years Oral	Dermal	Inhalation	Total Hazard	Percent Total HI
							ELCRo	ELCRd	ELCRi			HQo	HQd	HQi		
Semi Volatile Organic Compounds												0.0E+00	0.0E+00			
Acenaphthylene	4.00E-01	m	1	0.13	2.70E+05	V	NA	NA	NA	NA		2.3E-05	1.2E-05	NA	3.5E-05	1%
Benz(a)anthracene	5.00E-01	m	1	0.13	2.79E+12	P	2.1E-07	1.1E-07	8.1E-15	3.3E-07	6%	NA	NA	NA	NA	
Benzo(a)pyrene	3.13E-01		1	0.13	2.79E+12	P	1.3E-06	7.0E-07	5.1E-14	2.0E-06	40%	NA	NA	NA	NA	
Benzo(b)fluoranthene	4.10E-01		1	0.13	2.79E+12	P	1.8E-07	9.1E-08	6.6E-15	2.7E-07	5%	NA	NA	NA	NA	
Benzo(g,h,i)perylene	4.80E-01	m	1	0.13	2.79E+12	P	NA	NA	NA	NA		2.7E-05	1.4E-05	NA	4.2E-05	1%
Dibenz(a,h)anthracene	6.80E-02	m	1	0.13	2.79E+12	P	2.9E-07	1.5E-07	1.2E-14	4.4E-07	9%	NA	NA	NA	NA	
Indeno(1,2,3-cd)pyrene	4.20E-01	m	1	0.13	2.79E+12	P	1.8E-07	9.3E-08	6.8E-15	2.7E-07	5%	NA	NA	NA	NA	
Phenanthrene	2.10E-01	m	1	0.13	1.59E+06	V	NA	NA	NA	NA		1.2E-05	6.2E-06	NA	1.8E-05	<1%
Inorganics																
Chromium	5.90E+00	m	1	0.00	2.79E+12	P	1.7E-06	NA	7.3E-12	1.7E-06	34%	3.4E-03	NA	2.5E-08	3.4E-03	97%
							4E-06	1E-06	7E-12			0.003	0.00003	3E-08		
Total															0.003	
							Total Adult Resident Risk			**5E-06**		**Total Adult Resident Hazard**			**0.003**	

[a] RAF = Relative absorption factor for soil ingestion.
[b] Minimum of the volatilization factor ([VF] identified with [V]) and the particulate emission factor ([PEF] identified with [P]), derived on (Table 6-12) and (Table 6-11).

ELCR Excess lifetime cancer risk.
EPCs Exposure point concentration in soil.
HI Hazard Index.
HQ Hazard Quotient.

Equations are presented in Table 6-10.
Receptor-specific exposure parameters are presented in Table 6-16.
Constituent-specific toxicity values are presented in Table 6-17 through 6-20.

Table 6-31
Risk and Hazard Calculations for a Hypothetical Future Adult Resident Receptor for Exposure to Subsurface Soil (1-8 feet)
SWMU 39
Fort Stewart, Georgia

Constituent	EPCs (mg/kg)		RAF [a]	ABSd	PEF [b] (m³/kg)		TOTAL CANCER RISK Route-Specific Risk 30 years Oral	Dermal	Inhalation	Total ELCR	Percent Total ELCR	NON-CANCER HAZARD Route-Specific Hazard 30 years Oral	Dermal	Inhalation	Total Hazard	Percent Total HI
							ELCRo	ELCRd	ELCRi			HQo	HQd	HQi		
Volatile Organic Compounds																
Methylcyclohexane	1.00E-03	m	1	0.00	3.69E+10	P	NA	NA	NA	NA		NA	NA	5.4E-15	5.4E-15	<1%
Semi Volatile Organic Compounds												0.0E+00	0.0E+00			
Acenaphthylene	2.00E-01	m	1	0.13	2.70E+05	V	NA	NA	NA	NA		1.1E-05	5.9E-06	NA	1.7E-05	<1%
Benz(a)anthracene	4.30E-01	m	1	0.13	3.69E+10	P	1.8E-07	9.6E-08	5.3E-13	2.8E-07	4%	NA	NA	NA	NA	
Benzo(a)pyrene	6.80E-01	m	1	0.13	3.69E+10	P	2.9E-06	1.5E-06	8.3E-12	4.4E-06	62%	NA	NA	NA	NA	
Benzo(b)fluoranthene	1.88E-01		1	0.13	3.69E+10	P	8.1E-08	4.2E-08	2.3E-13	1.2E-07	2%	NA	NA	NA	NA	
Benzo(g,h,i)perylene	3.70E-01	m	1	0.13	3.69E+10	P	NA	NA	NA	NA		2.1E-05	1.1E-05	NA	3.2E-05	<1%
Dibenz(a,h)anthracene	1.00E-01	m	1	0.13	3.69E+10	P	4.3E-07	2.2E-07	1.3E-12	6.5E-07	9%	NA	NA	NA	NA	
Indeno(1,2,3-cd)pyrene	3.30E-01	m	1	0.13	3.69E+10	P	1.4E-07	7.3E-08	4.0E-13	2.1E-07	3%	NA	NA	NA	NA	
Phenanthrene	6.70E-02	m	1	0.13	1.59E+06	V	NA	NA	NA	NA		3.8E-06	2.0E-06	NA	5.8E-06	<1%
Inorganics																
Arsenic	5.36E-01		0.6	0.03	3.69E+10	P	2.8E-07	5.7E-08	2.6E-11	3.4E-07	5%	1.8E-03	3.7E-04	1.2E-06	2.2E-03	49%
Chromium	3.96E+00		1	0.00	3.69E+10	P	1.2E-06	NA	3.7E-10	1.2E-06	16%	2.3E-03	NA	1.3E-06	2.3E-03	50%
							5E-06	2E-06	4E-10			0.004	0.0004	0.000002		
Total															0.005	
							Total Adult Resident Risk			**7E-06**		**Total Adult Resident Hazard**			**0.005**	

[a] RAF = Relative absorption factor for soil ingestion.
[b] Minimum of the volatilization factor ([VF] identified with [V]) and the particulate emission factor ([PEF] identified with [P]), derived on (Table 6-12) and (Table 6-11).

ELCR Excess lifetime cancer risk.
EPCs Exposure point concentration in soil.
HI Hazard Index.
HQ Hazard Quotient.

Equations are presented in Table 6-10.
Receptor-specific exposure parameters are presented in Table 6-16.
Constituent-specific toxicity values are presented in Table 6-17 through 6-20.

Table 6-32
Summary of Calculated Human Health Risks and Hazards
SWMU 39
Fort Stewart, Georgia

Excess Lifetime Cancer Risk and Total non-cancer Hazard Index [a]

RECEPTOR	Exposure Medium - Scenario	Table	Total Excess Lifetime Cancer Risk	Total Non-Cancer Hazard
Site Worker				
Current	Direct Contact with Surface Soil (0-1 foot)	Table 6-21	3E-06	0.002
	Vapor Migration to Indoor Air	Table I-4	2E-07	0.03
	Total Site Risk		4E-06	0.03
Future	Direct Contact with Subsurface Soil (1-8 feet)	Table 6-22	5E-06	0.003
	Vapor Migration to Indoor Air	Table I-4	2E-07	0.03
	Total Site Risk		5E-06	0.03
Current and Hypothetical Future Adolescent Trespasser				
	Direct Contact with Surface Soil (0-1 foot)	Table 6-24	2E-06	0.0006
	Direct Contact with Subsurface Soil (1-8 feet)	Table 6-25	3E-06	0.001
	Sediment - Wading	Table 6-26	9E-07	0.01
	Surface Water - Wading	Table 6-27a	NA	0.0007
	Total Site Risk		6E-06	0.01
Hypothetical Construction Worker				
	Direct Contact with Soil (0-8 feet)	Table 6-23	1E-07	0.003
	Total Site Risk		1E-07	0.003
Hypothetical Future Resident				
Child	Direct Contact with Surface Soil (0-1 foot)	Table 6-28	**5E-05**	0.03
	Direct Contact with Subsurface Soil (1-8 feet)	Table 6-29	**6E-05**	0.03
	Vapor Migration to Indoor Air	Table J-4	2E-07	0.1
	Total Site Risk for Future Hypothetical Child Residents		**1E-04**	0.2
Adult	Direct Contact with Surface Soil (0-1 foot)	Table 6-30	5E-06	0.003
	Direct Contact with Subsurface Soil (1-8 feet)	Table 6-31	7E-06	0.005
	Vapor Migration to Indoor Air	Table J-8	8E-07	0.1
	Total Site Risk for Future Hypothetical Adult Residents		1E-05	0.1

[a] Cancer risk estimates exceeding $1x10^{-5}$ and non-cancer hazard estimates exceeding one are in bold.

Table 6-33
Calculation of Remedial Goal Options
Site Worker Receptor Exposed to Soil
SWMU 39
Fort Stewart, Georgia

Constituent of Concern	Soil EPC (mg/kg)	Calculated ELCR (Soil) (Table 6-21)	TCR =	RGO - Site Worker Exposure to Soil (mg/kg) [a]		
				1.00E-06	1.00E-05	1.00E-04
Semi Volatile Organic Compounds						
Benzo(a)pyrene	0.31	1.5E-06		2.1E-01	2.1E+00	2.1E+01

[a] Calculated RGO is applicable for surface and subsurface soil.

ELCR	Excess lifetime cancer risk.
EPC	Exposure point concentration.
mg/kg	Milligram per kilogram.
RGO	Remedial goal option.
TCR	Target cancer risk.

A target cancer risk of $1x10^{-5}$ was selected for the site because it is industrial.

Table 6-34
Calculation of Remedial Goal Options
Hypothetical Adolescent Trespasser Receptor Exposed to Soil
SWMU 39
Fort Stewart, Georgia

Constituent of Concern	Soil EPC (mg/kg)	Calculated ELCR (Soil) (Table 6-25)	TCR =	RGO - Adolescent Trespasser Exposure to Soil (mg/kg) [a]		
				1.00E-06	1.00E-05	1.00E-04
Semi Volatile Organic Compounds						
Benzo(a)pyrene	0.31	2.1E-06		1.5E-01	1.5E+00	1.5E+01

[a] Calculated RGO is applicable for surface and subsurface soil.

ELCR	Excess lifetime cancer risk.
EPC	Exposure point concentration.
mg/kg	Milligram per kilogram.
RGO	Remedial goal option.
TCR	Target cancer risk.

A target cancer risk of $1x10^{-5}$ was selected for the site because it is industrial.

Table 6-35
Calculation of Remedial Goal Options
Hypothetical Future Child Resident Receptor Exposed to Soil
SWMU 39
Fort Stewart, Georgia

Constituent of Concern	Soil EPC (mg/kg)	Calculated ELCR (Soil) (Table 6-28)	TCR =	RGOs - Child Resident Exposure to Soil (mg/kg) [a]		
				1.00E-06	1.00E-05	1.00E-04
Semi Volatile Organic Compounds						
Benz(a)anthracene	0.5	2.9E-06		1.7E-01	1.7E+00	1.7E+01
Benzo(a)pyrene	0.31	1.8E-05		1.7E-02	1.7E-01	1.7E+00
Benzo(b)fluoranthene	0.41	2.4E-06		1.7E-01	1.7E+00	1.7E+01
Dibenz(a,h)anthracene	0.068	4.0E-06		1.7E-02	1.7E-01	1.7E+00
Indeno(1,2,3-cd)pyrene	0.42	2.4E-06		1.7E-01	1.7E+00	1.7E+01
Metals						
Chromium	5.9	1.7E-05		3.4E-01	3.4E+00	3.4E+01

[a] Calculated RGOs are applicable for surface and subsurface soil.

ELCR	Excess lifetime cancer risk.
EPC	Exposure point concentration.
mg/kg	Milligram per kilogram.
RGO	Remedial goal option.
TCR	Target cancer risk.

A target cancer risk of $1x10^{-5}$ was selected for the site because it is industrial.

Table 6-36
Calculation of Remedial Goal Options
Hypothetical Future Adult Resident Receptor Exposed to Soil
SWMU 39
Fort Stewart, Georgia

Constituent of Concern	Soil EPC (mg/kg)	Calculated ELCR (Soil) (Table 6-30)	TCR =	RGOs - Adult Resident Exposure to Soil (mg/kg) [a]		
				1.00E-06	1.00E-05	1.00E-04
Semi Volatile Organic Compounds						
Benzo(a)pyrene	0.31	2.0E-06		1.5E-01	1.5E+00	1.5E+01
Metals						
Chromium	5.9	1.7E-06		3.4E+00	3.4E+01	3.4E+02

[a] Calculated RGOs are applicable for surface and subsurface soil.

ELCR	Excess lifetime cancer risk.
EPC	Exposure point concentration.
mg/kg	Milligram per kilogram.
RGO	Remedial goal option.
TCR	Target cancer risk.

A target cancer risk of $1x10^{-5}$ was selected for the site because it is industrial.

Table 7-1
Selection of Constituents of Potential Ecological Concern for Surface Soil (0-1 feet)
SWMU 39
Fort Stewart, Georgia

Constituent [a]	Frequency of Detection (FOD) number of detects/	number of samples	(%)	Detection Limits Min (mg/kg)	-	Max (mg/kg)	Detected Concentrations Min (mg/kg)	-	Max (mg/kg)	Location of Maximum Concentration (Depth in feet)	Soil Ecological Screening Value (ESV) [b] Value (mg/kg)	Source	Is Constituent a COPEC? [c] (YES, no)	Rationale
Volatile Organic Compound														
Acetone	3	-	4	75	0.021	-	0.021	0.015	-	0.024	F39SB011(0.5)	2.5	R5	no	BSV
Semi Volatile Organic Compounds														
Acenaphthene	1	-	10	10	0.069	-	0.078	0.02	-	0.02	FS39SB013(0.5)	20	R4	no	BSV
Acenaphthylene	4	-	10	40	0.069	-	0.078	0.029	-	0.4	F39SB010(0.5)	682	R5	no	BSV
Anthracene	4	-	10	40	0.069	-	0.078	0.015	-	0.25	F39SB010(0.5)	0.1	R4	**YES**	ASV
Benz(a)anthracene	4	-	10	40	0.069	-	0.078	0.07	-	0.5	F39SB010(0.5)	5.21	R5	no	BSV
Benzo(a)pyrene	5	-	10	50	0.069	-	0.078	0.011	-	0.82	F39SB010(0.5)	0.1	R4	**YES**	ASV
Benzo(b)fluoranthene	5	-	10	50	0.069	-	0.078	0.015	-	1.1	F39SB010(0.5)	59.8	R5	no	BSV
Benzo(g,h,i)perylene	4	-	10	40	0.069	-	0.078	0.041	-	0.48	F39SB010(0.5)	119	R5	no	BSV
Benzo(k)fluoranthene	4	-	10	40	0.069	-	0.078	0.046	-	0.38	F39SB010(0.5)	148	R5	no	BSV
1,1'-Biphenyl	1	-	10	10	0.069	-	0.078	0.012	-	0.012	F39SB017(0)	60	R4	no	BSV
4-Chlorobenzenamine	2	-	10	20	0.069	-	0.078	0.015	-	0.068	F39SB015(0)	1.1	R5	no	BSV
Chrysene	4	-	10	40	0.069	-	0.078	0.094	-	0.57	F39SB010(0.5)	4.73	R5	no	BSV
Dibenz(a,h)anthracene	3	-	10	30	0.069	-	0.078	0.012	-	0.068	FS39SB013(0.5)	18.4	R5	no	BSV
Di-n-octylphthalate	1	-	10	10	0.069	-	0.078	0.039	-	0.039	F39SB010(0.5)	709	R5	no	BSV
Fluoranthene	5	-	10	50	0.069	-	0.078	0.013	-	0.28	F39SB010(0.5)	0.1	R4	**YES**	ASV
Fluorene	1	-	10	10	0.069	-	0.078	0.11	-	0.11	FS39SB013(0.5)	30	R4	no	BSV
Indeno(1,2,3-cd)pyrene	4	-	10	40	0.069	-	0.078	0.036	-	0.42	F39SB010(0.5)	109	R5	no	BSV
2-Methylnaphthalene	1	-	10	10	0.069	-	0.078	0.015	-	0.015	F39SB017(0)	3.24	R5	no	BSV
Phenanthrene	3	-	10	30	0.069	-	0.078	0.023	-	0.21	FS39SB013(0.5)	0.1	R4	**YES**	ASV
Pyrene	5	-	10	50	0.069	-	0.078	0.019	-	0.64	F39SB010(0.5)	0.1	R4	**YES**	ASV
Metals														
Arsenic	1	-	4	25	0.5	-	0.56	0.56	-	0.56	F39SB009(0.5)	10	R4	no	BSV
Barium	4	-	4	100	–	-	–	1.1	-	10	F39SB009(0.5)	165	R4	no	BSV
Cadmium	1	-	4	25	0.014	-	0.054	0.36	-	0.36	F39SB009(0.5)	1.6	R4	no	BSV
Chromium	3	-	4	75	0.38	-	0.38	2.7	-	5.9	F39SB009(0.5)	0.4	R4	**YES**	ASV
Lead	4	-	4	100	–	-	–	0.81	-	43	F39SB009(0.5)	50	R4	no	BSV
Mercury	3	-	4	75	0.086	-	0.086	0.015	-	0.03	F39SB010(0.5)	0.1	R4	no	BSV

COPEC Constituent of Potential Ecological Concern.
mg/kg Milligrams per kilogram.
max maximum.
min minimum.

[a] Only constituents detected at least once are presented.
[b] Ecological screening values (ESVs) were identified from USEPA Region IV Ecological Screening Values (USEPA 2001b; R4), and USEPA Region V Ecological Screening Levels (USEPA 2003; R5), and USEPA Ecological Soil Screening Levels for Polycyclic Aromatic Hydrocarbons (EcoSSL; USEPA 2007) in order of priority.
[c] Constituents were identified as COPECs if they were present at maximum concentrations above their ESVs (ASV).
Constituents were not identified as COPECs if they were present at maximum concentrations below their ESVs (BSVs).

Table 7-2
Selection of Constituents of Potential Ecological Concern for Sediment
SWMU 39
Fort Stewart, Georgia

Constituent [a]	Frequency of Detection (FOD) number of detects/	number of samples		(%)	Detection Limits Min (mg/kg)	-	Max (mg/kg)	Detected Concentrations Min (mg/kg)	-	Max (mg/kg)	Location of Maximum Concentration	Sediment Ecological Screening Value (ESV) [b] Value (mg/kg)	Source	Is Constituent a COPEC? [c] (YES, no)	Rationale
Volatile Organic Compounds															
Acetone	6	-	8	75	0.038	-	0.12	0.02	-	0.13	F39SED007(4/8/2010)	0.0099	R5	**YES**	ASV
cis-1,2-Dichloroethene	3	-	8	37.5	0.005	-	0.031	0.0015	-	0.003	F39SED005(4/8/2010)	NA		**YES**	NSV
Tetrachloroethene	2	-	8	25	0.0048	-	0.031	0.011	-	0.019	F39SED005(4/8/2010)	0.99	R5	no	BSV
Trichloroethene	5	-	8	62.5	0.005	-	0.031	0.0029	-	0.038	F39SED005(4/8/2010)	0.112	R5	no	BSV
Semi Volatile Organic Compounds															
Benzaldehyde	1	-	8	12.5	0.083	-	0.093	0.61	-	0.61	F39SED008(4/8/2010)	NA		**YES**	NSV
Benzo(b)fluoranthene	1	-	8	12.5	0.083	-	0.093	0.14	-	0.14	F39SED008(4/8/2010)	0.33	R4	no	BSV
Bis(2-ethylhexyl)phthalate	1	-	8	12.5	0.083	-	0.11	0.093	-	0.093	F39SED002(4/8/2010)	0.182	R4	no	BSV
2-Methylnaphthalene	1	-	8	12.5	0.083	-	0.093	0.14	-	0.14	F39SED008(4/8/2010)	0.33	R4	no	BSV
4-Methylphenol	1	-	8	12.5	0.16	-	0.21	0.16	-	0.16	F39SED002(4/8/2010)	0.0202	R5	**YES**	ASV
Phenanthrene	1	-	8	12.5	0.083	-	0.093	0.14	-	0.14	F39SED008(4/8/2010)	0.33	R4	no	BSV
Metals															
Arsenic	8	-	8	100	–	-	–	0.5	-	17	F39SED008(4/8/2010)	7.24	R4	**YES**	ASV
Barium	8	-	8	100	–	-	–	0.8	-	16	F39SED008(4/8/2010)	NA		**YES**	NSV
Cadmium	2	-	8	25	0.033	-	0.11	0.14	-	0.6	F39SED008(4/8/2010)	0.676	R4	no	BSV
Chromium	8	-	8	100	–	-	–	0.85	-	6.3	F39SED003(4/8/2010)	52.3	R4	no	BSV
Lead	8	-	8	100	–	-	–	0.64	-	9.3	F39SED003(4/8/2010)	30.2	R4	no	BSV
Mercury	3	-	8	37.5	0.095	-	0.11	0.0098	-	0.062	F39SED003(4/8/2010)	0.13	R4	no	BSV

COPEC Constituent of Potential Ecological Concern.
max maximum.
min minimum.
mg/kg Milligrams per kilogram.
NA Not available.

[a] Only constituents detected at least once are presented.
[b] Ecological screening values (ESVs) were identified from USEPA Region IV Ecological Screening Values (USEPA 2001b; R4), and USEPA Region V Ecological Screening Levels (USEPA 2003; R5) in order of priority.
[c] Constituents were identified as COPECs if they were present at maximum concentrations above their ESVs (ASV) or if they had no ESVs (NSV).
Constituents were not identified as COPECs if they were present at maximum concentrations below their ESVs (BSV).

Table 7-3
Selection of Constituents of Potential Ecological Concern for Surface Water
SWMU 39
Fort Stewart, Georgia

Constituent [a]	Frequency of Detection (FOD) number of detects/ number of samples			(%)	Detection Limits Min (mg/L)	-	Max (mg/L)	Detected Concentrations Min (mg/L)	-	Max (mg/L)	Surface Water Ecological Screening Value (ESV) [b] Value (mg/L)	Source	Is Constituent a COPEC? [c] (YES, no)	Rationale
Volatile Organic Compounds														
Acetone	2	-	7	28.6	0.0038	-	0.0076	0.0031	-	0.014	1.7	R5	no	BSV
cis-1,2-Dichloroethene	7	-	7	100	–	-	–	0.0002	-	0.0011	0.97	R5*	no	BSV
trans-1,2-Dichloroethene	2	-	7	28.6	0.0005	-	0.0005	0.0001	-	0.0001	0.97	R5	no	BSV
Methylene chloride	1	-	7	14.3	0.0002	-	0.0003	0.0002	-	0.0002	0.59	GA	no	BSV
Tetrachloroethene	7	-	7	100	–	-	–	0.0001	-	0.0013	0.0033	GA	no	BSV
Trichloroethene	7	-	7	100	–	-	–	0.0015	-	0.0048	0.03	GA	no	BSV
Semi Volatile Organic Compound														
Caprolactam	5	-	7	71.4	0.005	-	0.005	0.0016	-	0.0026	NA		**YES**	NSV
Metals														
Arsenic	1	-	7	14.3	0.006	-	0.019	0.022	-	0.022	0.15	GA	no	BSV
Barium	7	-	7	100	–	-	–	0.038	-	0.049	0.22	R5	no	BSV
Chromium	4	-	7	57.1	0.005	-	0.005	0.0022	-	0.0042	0.011	R4	no	BSV
Lead	7	-	7	100	–	-	–	0.0039	-	0.0092	0.0012	GA	**YES**	ASV
Mercury	1	-	7	14.3	0.0001	-	0.0001	8E-05	-	8E-05	0.000012	GA	**YES**	ASV

COPEC Constituent of Potential Ecological Concern.
mg/L Milligrams per liter.
NA Not available.

[a] Only chemicals detected at least once are presented.
[b] Ecological screening values (ESVs) were identified from Georgia Instream Water Quality Standards (GA, GAEPD 2011), USEPA Region IV Ecological Screening Values (USEPA 2001b; R4), and USEPA Region V Ecological Screening Levels (USEPA 2003; R5) in order of priority.
* trans-1,2-dichloroethene was used as a surrogate for cis-1,2,-dichloroethene.
[c] Constituents were identified as COPECs if they were present at maximum concentrations above their ESVs (ASV) or if they had no ESVs (NSV).
Constituents were not identified as COPECs if they were present at maximum concentrations below their ESVs (BSV).

Table 7-4
Risk Characterization for Surface Soil (0-1 feet)
SWMU 39
Fort Stewart, Georgia

Constituent of Potential Ecological Concern	Exposure Point Concentration (EPC) [a] (mg/kg)		Soil ESV [b] Soil Inverts (mg/kg)	Plants	Avian (mg/kg)	Mammalian (mg/kg)	Source	Hazard Quotient (HQ) [c] Soil Inverts	Plants	Avian	Mammalian
Polycyclic Aromatic Hydrocarbons (PAHs)											
Total LPAH	0.825		29	NA	NA	100	EcoSSL	0.03	NA	NA	0.008
Total HPAH	1.87		18	NA	NA	1.1	EcoSSL	0.1	NA	NA	2
Metals											
Chromium [d]	5.9	m	NA	NA	26	34	EcoSSL	NA	NA	0.2	0.2

HAPH High molecular weight Polycyclic Aromatic Hydrocarbons.
LPAH Low molecular weight Polycyclic Aromatic Hydrocarbons.
mg/kg Milligrams per kilogram.
NA Not available.

[a] The EPC is the upper confidence level on the mean (UCL) or the maximum concentration where the UCL was incalculable.
UCLs were calculated using ProUCL 4.1. The UCL presented is the one recommended by the software.
EPCs marked with "m" are based on the maximum detected concentration.
[b] EcoSSL: USEPA Ecological Soil Screening Levels (USEPA 2005b, 2007).
[*] The lower of the values for the protection of avian and mammalian receptors for Chromium III.
[c] The HQ is the ratio of the EPC to the ESV. HQs are rounded to the nearest whole number.
[d] Values for Chromium III.

Figures

Appendix A

Soil Background Study

APPENDIX F

BACKGROUND DATA SUMMARY

THIS PAGE INTENTIONALLY LEFT BLANK.

FIGURES

F-1 Location Map for Background Sample Stations (SWMUs 1, 2, 3, 4A through 4F, 12A, and 29), Fort Stewart, Georgia F-9
F-2 Location Map for Background Sample Stations (SWMUs 14, 17, 18, 26, 31, 32, 34, and 35), Fort Stewart, Georgia F-10

TABLES

F-1 Background Media Summary F-6
F-2 Surface Soil Background F-11
F-3 Subsurface Soil Background F-13
F-4 Groundwater Background F-19
F-5 Surface Water Background F-23
F-6 Sediment Background F-25
F-7 Statistical Analysis of Surface Soil Background Data F-29
F-8 Statistical Analysis of Subsurface Soil Background Data F-34
F-9 Statistical Analysis of Groundwater Background Data F-39

THIS PAGE INTENTIONALLY LEFT BLANK.

BACKGROUND DATA ANALYSIS

The reference background criteria have been developed based on data from background samples collected across the Fort Stewart Military Reservation (FSMR) for Solid Waste Management Units (SWMUs) under Phase II Resource Conservation and Recovery Act Facility Investigation (RFI). In general, reference background samples were collected in each medium at locations upgradient or upstream of each site so as to be representative of naturally occurring conditions at SWMUs under investigation. In addition, soil samples collected during Phase I RFI activities [i.e., Burn Pits (SMWUs 4A, 4B, 4D, 4E, and 4F), Active Explosive Ordnance Disposal Area (SWMU 12A), etc.] were included in the set of reference background samples if they were determined to be upgradient of the site and if the data were of sufficient quality to be representative of natural background conditions at the FSMR. A summary of the sample locations and the source of the data (Phase I or II RFI) for each medium are presented in Table F-1. Figures F-1 and F-2 show the sites of the background locations.

U.S. Environmental Protection Agency (EPA) Region IV methodology (Soil Screening Guidance: Technical Background Document, EPA 540/R-94/106) was used as guidance for the development of the background data set for screening metals data. In cases where enough samples (e.g., more than 20) are collected to define background, a background upper tolerance level can be calculated. In cases where fewer samples (e.g., fewer than 20) are collected to define background, background can be calculated as two times the mean background concentration (EPA 540/R-94/106). Given that fewer than 20 background samples were collected for the FSMR, the latter method was used for calculating reference background concentrations for metals.

Tables F-2 through F-6 present the summary of background data and the two-times-mean background concentrations for surface soil, subsurface soil, groundwater, surface water, and sediment, respectively. If a chemical was not detected at a site, then one-half the detection limit was used as the concentration when calculating the mean background concentration. Given the limited number of background samples, the mean concentration for soils in the eastern United States is also presented for comparative purposes only. A statistical analysis of the surface soil, subsurface soil, and groundwater data is presented in Tables F-7, F-8, and F-9, respectively. Since the surface water and sediment backgrounds were based on one site-specific sample, no statistical analysis was performed.

The use of background data from multiple SWMUs across the FSMR is appropriate for soil and groundwater for the following reasons:

1. The soil types for both surface and subsurface soils consist of similar Coastal Plain deposits (both former barrier island and backwater marsh deposits) with varying amounts of sands, silts, and clays. The variation in soil types occurs vertically at a given site to the same extent that it occurs across the Installation. No correlation between the metal concentration and either soil type or geological facies is apparent. The range of variation in the concentration of any given analyte across the background samples is relatively narrow, and generally significantly less than the mean concentration for soils in the eastern United States.

2. The turbidity of groundwater samples was minimized through the use of low-flow micropurging techniques during sample collection. The turbidity values ranged from 1.8 to 136 across all samples. No correlation between the metal concentration and turbidity is apparent. All samples were collected at the water table in the same type of aquifer unit.

Table F-1. Background Media Summary

SWMU Number	SWMU Name on Hazardous Waste Permit HW-045	Surface Soil	Subsurface Soil	Groundwater	Surface Water	Sediment
1	South Central Landfill	SC-M17[a]	SC-M17[a]	MW10[a]	SW/SED1	SW/SED1
2	Camp Oliver Landfill	**MW5**[b]	**MW5**[b]	**MW5**[b]	SWS2	SWS2
3	TAC-X Landfill	**MW5**[b]	**MW5**[b]	**MW5**[b]	NB	NB
4A	Burn Pit A		**MW1**[c] (Phase I)	**MW1**[d]	NP	NP
4B	Burn Pit B		**MW3**[c] (Phase I)	**MW3**[d]	NP	NP
4C	Burn Pit C	**MW7**[d]	**MW7**[d]	**MW7**[d]	NP	NP
4D	Burn Pit D		**MW2**[c] (Phase I)	**MW2**[d]	NP	NP
4E	Burn Pit E		**MW3**[c] (Phase I)	**MW3**[d]	NP	NP
4F	Burn Pit F		**MW1**[c] (Phase I)	**MW1**[d]	NP	NP
10	Inactive EOD Area				SWS1	SWS1
12A	Active EOD Containing Open Detonation Unit and Open Burn Unit	**MW1**[e]	**MW1**[e]	**MW1**[b]	SWS1	SWS1
14	Old Fire Training Area			MW8[b]	NP	NP
17	DRMO Hazardous Waste Storage Area	**MW1**[b]	**MW1**[b]	**MW1**[b]	SWS1	SWS1
18	Industrial Wastewater Treatment Plant	**MW1**[b]	**MW1**[b]	**MW1**[b]	SWS1	SWS1
26	Former 724th Tanker Purging Station	**MW1**[b]	**MW1**[b]	**MW1**[b]	SWS1	SWS1
29	Evans Army Heliport POL Storage Facility	**MW5**[b]	**MW5**[b]	**MW5**[b]	NP	NP
31	DEH Asphalt Tanks	**MW1**[b]	**MW1**[b]	**MW1**[b]	NP	NP
32	Supply Diesel Tank	**MW1**[b]	**MW1**[b]	**MW1**[b]	NP	NP
34	DEH Equipment Wash Rack	**MW1**[b]	**MW1**[b]	**MW1**[b]	NP	NP
35	Wright Army Airfield Bulk Fuel System	HA-05[f] (Phase I)	HA-05[f] (Phase I)		NA	NA

[a]SAIC (Science Applications International Corporation) 1998. Phase II RCRA Facility Investigations Report for the South Central Landfill (SWMU 1), Fort Stewart, Georgia (Final Report), September.

[b]Information provided in Chapters 9.0 and 10.0 under the respective Phase II RFI SWMUs.

[c]Rust Environment and Infrastructure 1996. Phase I RCRA Facility Investigation Report for 24 Solid Waste Management Units at Fort Stewart, Georgia, Volume I of III (Corrected Final Report), May.

[d]SAIC 1998. Phase II RCRA Facility Investigation Report for the Burn Pits (SWMUs 4A–4F) at Fort Stewart, Georgia (Final Report), March.

[e]Radian International LLC 1997. Site Characterization Report, Open Burn/Open Detonation Units, Fort Stewart, Georgia (Draft Report), January.

[f]Metcalf & Eddy, Inc. 1996. Final Phase I RFI Report for Bulk Fuel Storage System at Wright Army Airfield, Fort Stewart, Georgia, December.

NA = Not applicable.

NB = No site-specific background sample available; results from Former 724th Tanker Purging Station (SWMU 26) used.

NP = No surface water/sediment pathway exists.

Bold indicates background groundwater sample collected from the same borehole as sample for soil (i.e., monitoring well was constructed in the borehole).

Definitions of acronyms and abbreviations used in Appendix F tables include:

CV	coefficient of variation
Det. Limit	detection limit reported by the analytical laboratory
Distr.	distribution of data (normal, lognormal)
Min. Detect	minimum detected value
Sample ID	sample identification number on chain of custody
Site-specific background criteria	Surface water and sediment background samples were collected upgradient of this particular SWMU and are specific to this site only. No Installation-wide background data set has been established for surface water or sediment.
SWMU	Solid Waste Management Unit
USGS	U.S. Geological Survey

THIS PAGE INTENTIONALLY LEFT BLANK.

Table F-2. Surface Soil Background

Location	Mean Background	2 × Mean Background	USGS Eastern U.S. Reference Value	SWMU 2	SWMU 3	SWMU 17	SWMU 18	SWMU 29	SWMU 31	SWMU 32
Station				02-MW5	03-MW5	17-MW1	18-MW1	29-MW5	31-MW1	32-MW1
Sample ID				021511	031511	171111	181111	291511	311111	321111
Date				01/14/98	01/16/98	01/30/98	02/01/98	01/29/98	01/28/98	01/30/98
Depth (feet)				0 to 2	0 to 2	1 to 2	0 to 1	0 to 1	0 to 1	0 to 1
Volatile Organic Compounds (mg/kg)										
1,1-Dichloroethene	0.00	0.00		<0.0057	<0.0059	0.00037	<0.006	<0.006	<0.0055	0.0003
2-Butanone	0.01	0.01		<0.0114	<0.0118			0.0016	<0.011	
2-Hexanone	0.01	0.01		<0.0114	<0.0118	<0.0103	<0.0119	0.0011	<0.011	<0.011
4-Methyl-2-pentanone	0.01	0.01		<0.0114	<0.0118	<0.0103	<0.0119	0.0011	<0.011	<0.011
Acetone	0.01	0.01		<0.0114	<0.0118			0.0053	<0.0325	
Benzene	0.00	0.01		<0.0057	<0.0059	<0.0052	<0.006	<0.006	<0.0055	<0.0055
Bromomethane	0.01	0.01		<0.0114	<0.0118	<0.0103	<0.0119	0.0018	<0.011	<0.011
Carbon disulfide	0.00	0.01		<0.0057	<0.0059	<0.0052	<0.006	0.0016	<0.0055	<0.0055
Ethylbenzene	0.00	0.01		<0.0057	<0.0059	0.00044	<0.006	<0.006	<0.0055	<0.0055
Toluene	0.01	0.01		<0.0057	0.00043	0.0266	<0.006	0.0114	0.004	0.0067
Trichloroethene	0.00	0.01		<0.0057	<0.0059	0.00035	<0.006	<0.006	<0.0055	<0.0055
Pesticides/PCBs (mg/kg)										
4,4'-DDE	0.00	0.00		0.0011	<0.0015					
4,4'-DDT	0.00	0.00		0.0024	<0.0015					
Methoxychlor	0.00	0.01		0.0029	<0.0077					
Metals (mg/kg)										
Arsenic	1.05	2.10	7.4	2.2	<0.35	<0.33	<0.38	0.45	5.1	0.62
Barium	7.37	14.70	420	21.9	7.1	2.3	0.77	3.7	7	8.4
Cadmium	0.09	0.18	2	<0.05	<0.04	<0.04	<0.05	0.05	0.1	0.33
Chromium	3.10	6.21	52	12.1	2.5	0.98	0.21	1	1.5	3.1
Lead	4.41	8.81	17	6.8	1.6	0.91	0.48	11	2.6	7.4
Mercury	0.02	0.03	0.12	0.04	<0.02	<0.02	<0.01	0.02	<0.02	0.03
Selenium	0.20	0.41	0.45	<0.16	<0.15	<0.14	<0.16		<0.16	
Silver	0.08	0.15	2.8	<0.07	<0.07	<0.06		<0.07	<0.06	<0.07
Radionuclides (pCi/g)										
Radium-226	0.43	0.86								
Radium-228	0.85	1.70								

Table F-2. Surface Soil Background (continued)

Location	Mean Background	2 × Mean Background	USGS Eastern U.S. Reference Value	SWMU 34	SWMU 35	Burn Pit C	Former 724th Tanker Purging Station	SWMU 12A	SWMU 1
Station				34-MW1	HA-05	MW-7	MW1	SB01-MW-1	SC-M17
Sample ID				341111	WAHA-0501	4C1711	261111	SBSL1	011711
Date				01/30/98	03/20/96	07/11/97	07/23/97	9/24/96	11/16/97
Depth (feet)				0 to 1	0 to 2	0 to 1	0 to 2	0 to 2	0 to 1
Volatile Organic Compounds (mg/kg)									
1,1-Dichloroethene	0.00	0.00					<0.0023		<0.0114
2-Butanone	0.01	0.01		<0.0054			<0.0057		<0.0227
2-Hexanone	0.01	0.01					<0.0057		<0.0227
4-Methyl-2-pentanone	0.01	0.01		<0.0109			<0.0057		<0.0227
Acetone	0.01	0.01		<0.0109			<0.0057		<0.0227
Benzene	0.00	0.01		0.0036	<0.0055		<0.0023		<0.0114
Bromomethane	0.01	0.01		0.00042			<0.0023		<0.0227
Carbon disulfide	0.00	0.01		<0.0109			<0.0057		<0.0114
Ethylbenzene	0.00	0.01		<0.0054	<0.0055		<0.0023		<0.0114
Toluene	0.01	0.01		<0.0054	<0.0055		<0.0023		<0.0114
Trichloroethene	0.00	0.01		0.0024			<0.0023		<0.0114
Pesticides/PCBs (mg/kg)									
4,4'-DDE	0.00	0.00							<0.0015
4,4'-DDT	0.00	0.00							<0.0015
Methoxychlor	0.00	0.01							<0.0074
Metals (mg/kg)									
Arsenic	1.05	2.10	7.4	0.43	1.2	<0.32	<0.17		1.8
Barium	7.37	14.70	420	9.8	12	5.2	0.94		9.3
Cadmium	0.09	0.18	2	0.12	<0.5	<0.11	<0.06		<0.05
Chromium	3.10	6.21	52	2.2	3.5	0.67	<0.38	3	9.4
Lead	4.41	8.81	17	7.5	7.5	3.1	1.3	3.8	3.3
Mercury	0.02	0.03	0.12	0.04	<0.03	<0.02	<0.01		0.01
Selenium	0.20	0.41	0.45		<1	<0.21	0.63		<0.41
Silver	0.08	0.15	2.8	<0.07	<1	<0.04	<0.02		0.06
Radionuclides (pCi/g)									
Radium-226	0.43	0.86							0.428
Radium-228	0.85	1.70							0.851

Table F-3. Subsurface Soil Background

Location	Mean Background	2 × Mean Background	USGS Eastern U.S. Reference Values	SWMU 2	SWMU 3	SWMU 17	SWMU 18	SWMU 29	SWMU 31	SWMU 32
Station				02-MW5	03-MW5	17-MW1	18-MW1	29-MW5	31-MW1	32-MW1
Sample ID				021512	031512	171112	181112	291512	311112	321112
Date				01/14/98	01/16/98	01/30/98	02/01/98	01/29/98	01/28/98	01/30/98
Depth (feet)				13 to 15	3 to 5	8 to 9	3 to 3	3 to 4	5 to 6	3 to 4
Volatile Organic Compounds (mg/kg)										
2-Butanone	0.01	0.01		<0.0116	<0.0118			0.0012	<0.0115	
2-Hexanone	0.01	0.01		<0.0116	<0.0118	<0.0128	<0.0119	0.0011	<0.0115	<0.011
4-Methyl-2-pentanone	0.01	0.01		<0.0116	<0.0118	<0.0128	<0.0119	0.0011	<0.0115	<0.011
Acetone	0.02	0.05		<0.015	<0.0118	0.0495		0.005	<0.0598	0.0062
Bromomethane	0.01	0.01		<0.0116	<0.0118	<0.0128	<0.0119	0.002	<0.0115	<0.011
Carbon disulfide	0.00	0.01		<0.0058	<0.0059	<0.0064	<0.006	0.0018	<0.0057	<0.0055
Methylene chloride	0.00	0.01		<0.0058	<0.0059	<0.0064	<0.006	<0.006	<0.0069	<0.0055
Tetrachloroethene	0.00	0.01		<0.0058	<0.0059	<0.0064	<0.006	<0.006	<0.0057	<0.0055
Toluene	0.00	0.01		<0.0058	<0.0059	<0.0064	<0.006	0.00048	0.0012	<0.0055
Xylenes, total	0.00	0.01		<0.0058	<0.0059	<0.0064	<0.006	<0.006	<0.0057	<0.0055
Semivolatile Organic Compounds (mg/kg)										
1,2,4-Trichlorobenzene	0.24	0.48		<0.388	<0.391	<0.427	<0.397	<1.59	<0.383	<0.366
Bis(2-ethylhexyl)phthalate	0.32	0.64		<0.388	<0.391	<0.427	<0.397	<1.59	<0.383	<0.366
Di-*N*-butyl phthalate	0.26	0.52		<0.388	<0.391	<0.427	<0.397	<1.59	<0.383	<0.366
Fluoranthene	7.14	14.30		<0.388	<0.391	<0.427	<0.397	<1.59	<0.383	<0.366
Pyrene	7.31	14.60		<0.388	<0.391	<0.427	<0.397	<1.59	<0.383	<0.366
Pesticides/PCBs (mg/kg)										
alpha-BHC	0.00	0.00		0.00093	<0.00078					

Table F-3. Subsurface Soil Background (continued)

Location	Mean Background	2 × Mean Background	USGS Eastern U.S. Reference Values	SWMU 2	SWMU 3	SWMU 17	SWMU 18	SWMU 29	SWMU 31	SWMU 32
Station				02-MW5	03-MW5	17-MW1	18-MW1	29-MW5	31-MW1	32-MW1
Sample ID				021512	031512	171112	181112	291512	311112	321112
Date				01/14/98	01/16/98	01/30/98	02/01/98	01/29/98	01/28/98	01/30/98
Depth (feet)				13 to 15	3 to 5	8 to 9	3 to 3	3 to 4	5 to 6	3 to 4
Metals (mg/kg)										
Arsenic	4.02	8.04	7.4	1.3	2.8	0.78	1.6	0.44	1.5	<0.36
Barium	8.49	17.00	420	1.8	4.5	9.2	6.1	3.7	3.1	3.1
Cadmium	0.12	0.24	2	<0.05	<0.04	<0.05	<0.05	<0.05	<0.04	<0.04
Chromium	5.81	11.60	52	6.4	4.1	16.2	5.4	1.6	0.76	1.5
Lead	5.56	11.10	17	2.2	1.1	10.4	4.5	1.8	1.3	1.1
Mercury	0.02	0.05	0.12	<0.02	<0.02	0.03	<0.02	0.04	<0.02	0.04
Selenium	0.56	1.12	0.45	<0.16	<0.16	<0.18	<0.79		<0.2	
Silver	0.23	0.46	2.8	<0.07	<0.07	<0.08		<0.07	<0.07	<0.07
Radionuclides (pCi/g)										
Radium-226	0.55	1.09								
Radium-228	0.45	0.89								
Other Analytes (mg/kg)										
Total organic carbon	1,100.00	2,200.00								

Table F-3. Subsurface Soil Background (continued)

Location	Mean Background	2 × Mean Background	USGS Eastern U.S. Reference Values	SWMU 34	SWMU 35	Burn Pit C	Former 724th Tanker Purging Station	Burn Pit A	Burn Pit F
Station				34-MW1	HA-05	MW-7	MW1	MW1	MW1
Sample ID				341112	WAHA-0502	4C1712	261112	FST004A-SL	FST004F-SL
Date				01/30/98	03/20/96	07/11/97	07/23/97	06/25/93	06/29/93
Depth (feet)				5 to 8	5 to 7	3 to 5	2 to 3	4 to 6	6 to 8
Volatile Organic Compounds (mg/kg)									
2-Butanone	0.01	0.01				<0.0054	<0.0058		
2-Hexanone	0.01	0.01		<0.0115		<0.0054	<0.0058		
4-Methyl-2-pentanone	0.01	0.01		<0.0115		<0.0054	<0.0058		
Acetone	0.02	0.05		<0.0115		<0.0054	0.0108	<0.057	<0.057
Bromomethane	0.01	0.01		<0.0115		<0.0022	<0.0023		
Carbon disulfide	0.00	0.01		<0.0057		<0.0054	<0.0058	<0.0057	<0.0057
Methylene chloride	0.00	0.01		<0.0057		<0.0022	<0.006	<0.0057	0.006
Tetrachloroethene	0.00	0.01		<0.0057		<0.0022	<0.0023	0.0061	<0.0057
Toluene	0.00	0.01		<0.0057	<0.0056	<0.0022	0.0026	0.0081	<0.0057
Xylenes, total	0.00	0.01		<0.0057	<0.0056	<0.0022	<0.0023	0.0061	<0.0057
Semivolatile Organic Compounds (mg/kg)									
1,2,4-Trichlorobenzene	0.24	0.48		<0.383					
Bis(2-ethylhexyl)phthalate	0.32	0.64		0.712					
Di-*N*-butyl phthalate	0.26	0.52		0.193					
Fluoranthene	7.14	14.30		<0.383	<0.37		<0.376		
Pyrene	7.31	14.60		<0.383	<0.37		<0.376		
Pesticides/PCBs (mg/kg)									
alpha-BHC	0.00	0.00							

Table F-3. Subsurface Soil Background (continued)

Location	Mean Background	2 × Mean Background	USGS Eastern U.S. Reference Values	SWMU 34	SWMU 35	Burn Pit C	Former 724th Tanker Purging Station	Burn Pit A	Burn Pit F
Station				34-MW1	HA-05	MW-7	MW1	MW1	MW1
Sample ID				341112	WAHA-0502	4C1712	261112	FST004A-SL	FST004F-SL
Date				01/30/98	03/20/96	07/11/97	07/23/97	06/25/93	06/29/93
Depth (feet)				5 to 8	5 to 7	3 to 5	2 to 3	4 to 6	6 to 8
Metals (mg/kg)									
Arsenic	4.02	8.04	7.4	<0.37	56	<0.3	0.56	<1.1	<1.1
Barium	8.49	17.00	420	5.2	30	1.1	6.4	5.7	6.2
Cadmium	0.12	0.24	2	<0.05	<0.5	<0.1	<0.06	<0.57	<0.57
Chromium	5.81	11.60	52	2.8	19	1.2	4.3	9	5.1
Lead	5.56	11.10	17	2.1	23	1.6	4.7	9.4	16
Mercury	0.02	0.05	0.12	0.05	<0.03	0.03	<0.01	0.059	<0.011
Selenium	0.56	1.12	0.45		<1	<0.2	0.67	<5.7	<1.1
Silver	0.23	0.46	2.8	<0.07	<1	<0.07	<0.06	<1.1	<1.1
Radionuclides (pCi/g)									
Radium-226	0.55	1.09							
Radium-228	0.45	0.89							
Other Analytes (mg/kg)									
Total organic carbon	1,100.00	2,200.00					1,100		

Table F-3. Subsurface Soil Background (continued)

Location	Mean Background	2 × Mean Background	USGS Eastern U.S. Reference Values	Burn Pit D	Burn Pit B	Burn Pit E	SWMU 12A	SWMU 12A	SWMU 1
Station				MW2	MW3	MW3	SB01-MW-1	SB01-MW-1	SC-M17
Sample ID				FST004D-SL	FST004B-SL	FST004E-SL	SB1SL2	SB1SL3	011712
Date				06/24/93	06/28/93	06/30/93	9/24/96	9/24/96	11/16/97
Depth (feet)				4 to 6	6 to 8	6 to 8	2 to 4	4 to 6	5 to 8
Volatile Organic Compounds (mg/kg)									
2-Butanone	0.01	0.01							<0.0222
2-Hexanone	0.01	0.01							<0.0222
4-Methyl-2-pentanone	0.01	0.01							<0.0222
Acetone	0.02	0.05		0.11	<0.057	<0.058			0.0254
Bromomethane	0.01	0.01							<0.0222
Carbon disulfide	0.00	0.01		<0.0056	<0.0057	<0.0058			<0.0111
Methylene chloride	0.00	0.01		<0.0056	<0.0057	<0.0058			<0.0111
Tetrachloroethene	0.00	0.01		<0.0056	<0.0057	<0.0058			<0.0111
Toluene	0.00	0.01		0.021	<0.0057	<0.0058			<0.0111
Xylenes, total	0.00	0.01		0.022	<0.0057	<0.0058			<0.0111
Semivolatile Organic Compounds (mg/kg)									
1,2,4-Trichlorobenzene	0.24	0.48							0.0022
Bis(2-ethylhexyl)phthalate	0.32	0.64							<0.363
Di-*N*-butyl phthalate	0.26	0.52							<0.363
Fluoranthene	7.14	14.30					83		<0.363
Pyrene	7.31	14.60					85		<0.363
Pesticides/PCBs (mg/kg)									
alpha-BHC	0.00	0.00							<0.00073

Table F-3. Subsurface Soil Background (continued)

Location	Mean Background	2 × Mean Background	USGS Eastern U.S. Reference Values	Burn Pit D	Burn Pit B	Burn Pit E	SWMU 12A	SWMU 12A	SWMU 1
Station				MW2	MW3	MW3	SB01-MW-1	SB01-MW-1	SC-M17
Sample ID				FST004D-SL	FST004B-SL	FST004E-SL	SB1SL2	SB1SL3	011712
Date				06/24/93	06/28/93	06/30/93	9/24/96	9/24/96	11/16/97
Depth (feet)				4 to 6	6 to 8	6 to 8	2 to 4	4 to 6	5 to 8
Metals (mg/kg)									
Arsenic	4.02	8.04	7.4	<1.1	<1.1	<1.2			<0.13
Barium	8.49	17.00	420	5.9	3.7	8.5	20	30	7.1
Cadmium	0.12	0.24	2	<0.56	<0.57	<0.58			<0.04
Chromium	5.81	11.60	52	3.3	4.5	9.5	4	9	2.8
Lead	5.56	11.10	17	3.7	2.7	5.2	4.1	7.5	3.2
Mercury	0.02	0.05	0.12	0.016	<0.011	0.062			0.01
Selenium	0.56	1.12	0.45	<1.1	<1.1	<2.3			<0.29
Silver	0.23	0.46	2.8	<1.1	<1.1	<1.2			<0.02
Radionuclides (pCi/g)									
Radium-226	0.55	1.09							0.547
Radium-228	0.45	0.89							0.445
Other Analytes (mg/kg)									
Total organic carbon	1,100.00	2,200.00							

Table F-4. Groundwater Background

Location	Mean Background	2 × Mean Background	SWMU 2	SWMU 3	SWMU 12A	SWMU 14	SWMU 17	SWMU 18	SWMU 29	SWMU 31	SWMU 32
Station			02-MW5	03-MW5	12A-MW1	14-MW8	17-MW1	18-MW1	29-MW5	31-MW1	32-MW1
Sample ID			024511	034511	124111	144811	174111	184111	294511	314111	324111
Date			35841	35842	35851	35840	35844	35851	35852	35850	35844
Volatile Organic Compounds (µg/L)											
1,1,1-Trichloroethane	1.75	3.50	<5	0.23		<5	<5	<5	<5	<5	<5
1,1-Dichloroethane	1.77	3.53	<5	<5		<5	<5	<5	<5	<5	0.53
1,3-*trans*-Dichloropropene	1.75	3.50	<5	<5		<5	<5	0.24	<5	<5	<5
Acetone	3.61	7.21	<10	3.6		<10	<10	5.2	<10	1.7	
Chloromethane	3.71	7.42	<10	<10		<10	<10	<10	<10	<10	<10
Ethylbenzene	1.49	2.97	<5	<5		<5	<5	0.23	0.21	0.34	<5
Methylene chloride	2.04	4.07	<5	<5		<5	<5	<5	<5	<5	<5
Toluene	0.97	1.94	<2	0.26		<2	<2	0.35	<5	0.35	<2
Trichloroethene	1.75	3.50	<5	<5		<5	<5	0.29	<5	<5	<5
Xylenes, total	1.55	3.10	<5	<5		<5	<5	0.42	0.69	0.71	<5
Metals (µg/L)											
Aluminum	1,200.00	2,400.00			1200						
Arsenic	1.51	3.02	<3	<3	<3	<3	<3	<3	<3	<3	<3
Barium	35.86	71.72	3.8	18.8	35.5	41.8	27.5	32.1	177	57.4	7.8
Cadmium	0.21	0.43		<0.21	<0.21		<0.21	0.32	<0.21	<0.21	<0.21
Calcium	1,630.00	3,260.00			1,630						
Chromium	1.78	3.56	<0.42	0.85	2.6	0.53	0.52	1.9	2.2	1.1	<0.42
Copper	2.00	4.00			2						
Iron	2,189.00	4,378.00			598						
Lead	2.35	4.69	25.5	<0.96	<0.96	<0.96	<0.96	<0.96	<0.96	<0.96	1.6
Magnesium	814.00	1,628.00			814						
Manganese	17.30	34.60			17.3						
Mercury	0.07	0.14	0.2	<0.1	<0.1	<0.1	<0.1	<0.1	<0.1	<0.1	<0.1
Nickel	1.90	3.80			1.9						
Potassium	643.00	1,286.00			643						
Selenium	0.95	1.90	<2.5	<2.5	<2.5	<3.3	<2.5	<2.5	<2.5	<2.5	<2.5
Silver	0.56	1.12	<0.86	<0.86	<0.86	<0.86	<0.86	<0.86	<0.86	<0.86	<0.86
Sodium	3,520.00	7,040.00			3,520						
Vanadium	2.00	4.00			2						

Table F-4. Groundwater Background (continued)

Location	Mean Background	2 × Mean Background	SWMU 2	SWMU 3	SWMU 12A	SWMU 14	SWMU 17	SWMU 18	SWMU 29	SWMU 31	SWMU 32
Station			02-MW5	03-MW5	12A-MW10	14-MW8	17-MW1	18-MW1	29-MW5	31-MW1	32-MW1
Sample ID			024511	034511	124111	144811	174111	184111	294511	314111	324111
Date			35841	35842	35851	35840	35844	35851	35852	35850	35844
Radionuclides (pCi/L)											
Radium-226	0.58	1.16									
Radium-228	1.71	3.42									
Anions (mg/L)											
Alkalinity	45,100.00	90,200.00									
Sulfate	13,358.75	26,717.50			1,100		4,200	38,900		32,900	10,600
Other Analytes (mg/L)											
Methane	53.70	107.40									
Total organic carbon	3,160.00	6,320.00			3,160						

Table F-4. Groundwater Background (continued)

Location	Mean Background	2 × Mean Background	SWMU 34	Burn Pit A	Burn Pit F	Burn Pit D	Burn Pit B	Burn Pit E	Burn Pit C	Former 724th Tanker Purging Station	SWMU 1
Station			34-MW1	MW-1	MW-1	MW-2	MW-3	MW-3	MW-7	MW1	SC-M10
Sample ID			344111	4A4111	4F4111	4D4211	4B4311	4E4311	4C4711	264111	012T11
Date			35844	08/08/97	07/30/97	07/29/97	08/09/97	07/29/97	08/07/97	08/13/97	12/11/97
Volatile Organic Compounds (µg/L)											
1,1,1-Trichloroethane	1.75	3.50	<5	<2	<2	<2	<2	<2	<2	<2	<5
1,1-Dichloroethane	1.77	3.53	<5	<2	<2	<2	<2	<2	<2	<2	<5
1,3-*trans*-Dichloropropene	1.75	3.50	<5	<2	<2	<2	<2	<2	<2	<2	<5
Acetone	3.61	7.21	<10	<5	<5	<5	<5	<5	<5		
Chloromethane	3.71	7.42	<10	<2	<2	<2	<2	<2	<2	7.1	<10
Ethylbenzene	1.49	2.97	<5	<2	<2	<2	<2	<2	<2	<2	<5
Methylene chloride	2.04	4.07	<5	<2	<2	<2	<5	<2	<5	2.1	<2
Toluene	0.97	1.94	<2	<2	<2	<2	<2	<2	<2	<2	<2
Trichloroethene	1.75	3.50	<5	<2	<2	<2	<2	<2	<2	<2	<5
Xylenes, total	1.55	3.10	<5	<2	<2	<2	<2	<2	<2	<2	<5
Metals (µg/L)											
Aluminum	1,200.00	2,400.00									
Arsenic	1.51	3.02	<3	<0.6	<0.6	<0.6	<0.6	<0.6	<0.6	10.1	<0.6
Barium	35.86	71.72	15	18.5	22.8	58	<14.6	6.9	26.6	50.7	38
Cadmium	0.21	0.43	<0.21	0.34	1.1	0.43	<0.2	<0.2	<0.2	<0.2	<0.2
Calcium	1,630.00	3,260.00									
Chromium	1.78	3.56	1.1	2.4	<0.6	<0.6	3.7	1.5	<0.6	<10	7.3
Copper	2.00	4.00									
Iron	2,189.00	4,378.00									3,780
Lead	2.35	4.69	<0.96	1.1	0.08	0.2	2.2	<1	<0.06	3.3	3.9
Magnesium	814.00	1,628.00									
Manganese	17.30	34.60									
Mercury	0.07	0.14	<0.1	<0.06	<0.04	<0.04	<0.05	<0.04	0.28	0.2	<0.03
Nickel	1.90	3.80									
Potassium	643.00	1,286.00									
Selenium	0.95	1.90	2.5	<0.4	<0.4	<0.82	<0.4	<0.4	<0.4	0.62	
Silver	0.56	1.12	<0.86	0.14	<0.07	0.37	0.14	<0.07	0.08	4.9	<0.07
Sodium	3,520.00	7,040.00									
Vanadium	2.00	4.00									

Table F-4. Groundwater Background (continued)

Location	Mean Background	2 × Mean Background	SWMU 34	Burn Pit A	Burn Pit F	Burn Pit D	Burn Pit B	Burn Pit E	Burn Pit C	Former 724th Tanker Purging Station	SWMU 1
Station			34-MW1	MW-1	MW-1	MW-2	MW-3	MW-3	MW-7	MW1	SC-M10
Sample ID			344111	4A4111	4F4111	4D4211	4B4311	4E4311	4C4711	264111	012T11
Date			35844	08/08/97	07/30/97	07/29/97	08/09/97	07/29/97	08/07/97	08/13/97	12/11/97
Radionuclides (pCi/L)											
Radium-226	0.58	1.16									0.581
Radium-228	1.71	3.42									1.71
Anions (mg/L)											
Alkalinity	45,100.00	90,200.00								45,100	
Sulfate	13,358.75	26,717.50	14,100							3,070	2,000
Other Analytes (mg/L)											
Methane	53.70	107.40								53.7	
Total organic carbon	3,160.00	6,320.00									

Table F-5. Surface Water Background

Location	SWMU 2			SWMU 10			SWMU 12A		
Station	02-SWS2			10-SWS1			12A-SWS1		
Sample ID	023211	Mean Background	2 × Mean Background	103111	Mean Background	2 × Mean Background	123111	Mean Background	2 × Mean Background
Date	01/14/98			02/01/98			01/27/98		
Metals (mg/L)									
Aluminum							844	844	1,688
Barium	23.4	23.4	46.8	16	16	32	13.9	13.9	27.8
Cadmium	<0.4			<0.4			<0.4		
Calcium							2,500	2,500	5,000
Chromium	0.93	0.93	1.86	0.69	0.69	1.38	0.7	0.7	1.4
Iron							832	832	1,664
Lead	<0.73			<0.73			1.3	1.3	2.6
Magnesium							749	749	1,498
Manganese							25.5	25.5	51
Mercury	<0.1			<0.1			<0.1		
Potassium							458	458	916
Silver	<0.63			<0.63			<0.63		
Sodium							3,220	3,220	6,440
Vanadium							2.1	2.1	4.2
Zinc							8.1	8.1	16.2

Table F-5. Surface Water Background (continued)

Location	SWMU 17			SWMU 18				Former 724th Tanker Purging Station	SWMUs 3 and 27	
Station	17-SWS1	Mean Background	2 × Mean Background	18-SWS1	18-SWS1	Mean Background	2 × Mean Background	SWS1	Mean Background	2 × Mean Background
Sample ID	173111			183111	183112			263111		
Date	01/28/95			01/31/98	03/03/98			08/13/97		
Metals (mg/L)										
Aluminum										
Barium	26.8	26.8	53.6	39.6	43.9	41.8	83.5	22.4	22.4	44.8
Cadmium	15.7	15.7	31.4	2.9	<0.36	1.54	3.08	<0.2		
Calcium										
Chromium	0.89	0.89	1.78	2	0.73	1.37	2.73	<0.6		
Iron										
Lead	2.5	2.5	5	<1.6	<1.3			2.6	2.6	5.2
Magnesium										
Manganese										
Mercury	0.12	0.12	0.24	0.37	<0.1	0.21	0.42	0.09	0.09	0.18
Potassium										
Silver	<0.63			<0.63	<0.86			0.15	0.15	0.3
Sodium										
Vanadium										
Zinc										

Table F-6. Sediment Background

Location	SWMU 2			SWMU 3			SWMU 10		
Station	02-SWS-2	Mean	2 × Mean	MC-SWS1	Mean	2 × Mean	10-SWS-1	Mean	2 × Mean
Sample ID	022211	Background	Background	262111	Background	Background	102111	Background	Background
Volatile Organic Compounds (mg/kg)									
2-Butanone	0.0272	0.0272	0.0544	<0.0063	0.00315	0.0063			
Acetone	0.149	0.149	0.298	<0.0063	0.00315	0.0063			
Toluene	0.0072	0.0072	0.0144	<0.0025	0.00125	0.0025			
Semivolatile Organic Compounds (mg/kg)									
Benzo(*b*)fluoranthene	<0.49	0.245	0.49	<0.42	0.21	0.42			
Bis(2-ethylhexyl)phthalate	0.388	0.388	0.776						
Fluoranthene	<0.49	0.245	0.49	<0.42	0.21	0.42			
Pyrene	<0.49	0.245	0.49	<0.42	0.21	0.42			
Pesticides/PCBs (mg/kg)									
4,4'-DDE	0.0021	0.0021	0.0042						
alpha-Chlordane	0.0013	0.0013	0.0026						
beta-BHC	0.0022	0.0022	0.0044						
delta-BHC	0.0034	0.0034	0.0068						
Endosulfan sulfate	0.0115	0.0115	0.023						
Endrin ketone	0.0027	0.0027	0.0054						
gamma-BHC (Lindane)	0.001	0.001	0.002						

Table F-6. Sediment Background (continued)

Location	SWMU 2			SWMU 3			SWMU 10		
Station	02-SWS-2	Mean Background	2 × Mean Background	MC-SWS1	Mean Background	2 × Mean Background	10-SWS-1	Mean Background	2 × Mean Background
Sample ID	022211			262111			102111		
Metals (mg/kg)									
Aluminum									
Arsenic	1.2	1.2	2.4	<0.37	0.185	0.37	0.49	0.49	0.98
Barium	11.2	11.2	22.4	1.5	1.5	3	5.5	5.5	11
Beryllium									
Cadmium	<0.06	0.03	0.06	<0.12	0.06	0.12	0.09	0.09	0.18
Calcium									
Chromium	8.1	8.1	16.2	<0.37	0.185	0.37	3.3	3.3	6.6
Cobalt									
Copper									
Iron									
Lead	4.3	4.3	8.6	0.69	0.69	1.38	4.5	4.5	9
Magnesium									
Manganese									
Mercury	<0.02	0.01	0.02	<0.02	0.01	0.02	<0.02	0.01	0.02
Nickel									
Potassium									
Selenium	<0.2	0.1	0.2	<0.24	0.12	0.24	<0.31	0.155	0.31
Silver	<0.09	0.045	0.09	<0.17	0.085	0.17	<0.08	0.04	0.08
Vanadium									
Zinc									

Table F-6. Sediment Background (continued)

Location	SWMU 12A			SWMU 17			SWMU 18		
Station	12A-SWS-1	Mean	2 × Mean	17-SWS-1	Mean	2 × Mean	18-SWS-1	Mean	2 × Mean
Sample ID	122111	Background	Background	172111	Background	Background	182111	Background	Background
Volatile Organic Compounds (mg/kg)									
2-Butanone				<0.013	0.0065	0.013	<0.0128	0.0064	0.0128
Acetone				<0.0194	0.0097	0.0194			
Toluene				0.00032	0.00032	0.00064	<0.0064	0.0032	0.0064
Semivolatile Organic Compounds (mg/kg)									
Benzo(*b*)fluoranthene	<1.02	0.51	1.02	0.315	0.315	0.63	<0.427	0.2135	0.427
Bis(2-ethylhexyl)phthalate	<1.02	0.51	1.02	2.82	2.82	5.64	<0.427	0.2135	0.427
Fluoranthene	<1.02	0.51	1.02	0.315	0.315	0.63	<0.427	0.2135	0.427
Pyrene	<1.02	0.51	1.02	0.329	0.329	0.658	<0.427	0.2135	0.427
Pesticides/PCBs (mg/kg)									
4,4'-DDE									
alpha-Chlordane									
beta-BHC									
delta-BHC									
Endosulfan sulfate									
Endrin ketone									
gamma-BHC (Lindane)									

Table F-6. Sediment Background (continued)

Location	SWMU 12A			SWMU 17			SWMU 18		
Station	12A-SWS-1	Mean	2 × Mean	17-SWS-1	Mean	2 × Mean	18-SWS-1	Mean	2 × Mean
Sample ID	122111	Background	Background	172111	Background	Background	182111	Background	Background
Metals (mg/kg)									
Aluminum	6,490	6,490	12,980						
Arsenic	0.94	0.94	1.88	3.2	3.2	6.4	<0.39	0.195	0.39
Barium	19.1	19.1	38.2	32.7	32.7	65.4	4.4	4.4	8.8
Beryllium	0.13	0.13	0.26						
Cadmium	0.17	0.17	0.34	8	8	16	0.12	0.12	0.24
Calcium	183	183	366						
Chromium	5.3	5.3	10.6	34.8	34.8	69.6	0.96	0.96	1.92
Cobalt	0.37	0.37	0.74						
Copper	3.6	3.6	7.2						
Iron	3,180	3,180	6,360						
Lead	10	10	20	95.3	95.3	190.6	1.5	1.5	3
Magnesium	173	173	346						
Manganese	8.6	8.6	17.2						
Mercury	0.05	0.05	0.1	0.05	0.05	0.1	<0.02	0.01	0.02
Nickel	1.8	1.8	3.6						
Potassium	119	119	238						
Selenium	0.41	0.41	0.82	<0.57	0.285	0.57	<0.17	0.085	0.17
Silver	<0.1	0.05	0.1	0.23	0.23	0.46			
Vanadium	10	10	20						
Zinc	5.6	5.6	11.2						

Table F-7. Statistical Analysis of Surface Soil Background Data

Analyte	USGS Eastern U.S. Reference	Results >Det. Limit	%Results >Det. Limit	Average Result	CV	Min Detect	Max Detect	Dist.[a]	Reference Background Criteria[b]
Metals (mg/kg)									
Arsenic	7.4	7/12	58.33	1.05	139	0.43	5.10	L	2.1
Barium	420	12/12	100.00	7.37	79	0.77	21.90	L	14.7
Cadmium	2	4/12	33.33	0.0875	116	0.05	0.33	D	0.175
Chromium	52	12/13	92.31	3.1	116	0.21	12.10	L	6.21
Lead	17	13/13	100.00	4.41	74.4	0.48	11.00	L	8.81
Mercury	0.12	5/12	41.67	0.0171	74.3	0.01	0.04	D	0.0342
Selenium	0.45	1/9	11.11	0.203	105	0.63	0.63	D	0.406
Silver	2.8	1/11	9.09	0.075	189	0.06	0.06	D	0.15
Pesticides/PCBs (mg/kg)									
4,4'-DDD		0/3	0.00	0.00075	0			O	0.0015
4,4'-DDE		1/3	33.33	0.000867	23.3	0.00	0.00	D	0.00173
4,4'-DDT		1/3	33.33	0.0013	73.3	0.00	0.00	D	0.0026
Aldrin		0/3	0.00	0.000375	2.31			O	0.00075
alpha-Chlordane		0/3	0.00	0.000375	2.31			O	0.00075
alpha-BHC		0/3	0.00	0.000375	2.31			O	0.00075
Aroclor-1016		0/3	0.00	0.00187	1.55			O	0.00373
Aroclor-1221		0/3	0.00	0.00187	1.55			O	0.00373
Aroclor-1232		0/3	0.00	0.00187	1.55			O	0.00373
Aroclor-1242		0/3	0.00	0.00187	1.55			O	0.00373
Aroclor-1248		0/3	0.00	0.00187	1.55			O	0.00373
Aroclor-1254		0/3	0.00	0.00187	1.55			O	0.00373
Aroclor-1260		0/3	0.00	0.00187	1.55			O	0.00373
beta-BHC		0/3	0.00	0.000375	2.31			O	0.00075
delta-BHC		0/3	0.00	0.000375	2.31			O	0.00075
Dieldrin		0/3	0.00	0.00075	0			O	0.0015
Endosulfan I		0/3	0.00	0.000375	2.31			O	0.00075
Endosulfan II		0/3	0.00	0.00075	0			O	0.0015
Endosulfan sulfate		0/3	0.00	0.00075	0			O	0.0015
Endrin		0/3	0.00	0.00075	0			O	0.0015
Endrin ketone		0/3	0.00	0.00075	0			O	0.0015

Note: Footnotes appear on page F-33.

Table F-7. Statistical Analysis of Surface Soil Background Data (continued)

Analyte	USGS Eastern U.S. Reference	Results >Det. Limit	%Results >Det. Limit	Average Result	CV	Min Detect	Max Detect	Dist.[a]	Reference Background Criteria[b]
gamma-Chlordane		0/3	0.00	0.000375	2.31			O	0.00075
gamma-BHC (Lindane)		0/3	0.00	0.000375	2.31			O	0.00075
Heptachlor		0/3	0.00	0.000375	2.31			O	0.00075
Heptachlor epoxide		0/3	0.00	0.000375	2.31			O	0.00075
Methoxychlor		1/3	33.33	0.00348	14.7	0.00	0.00	D	0.00697
Toxaphene		0/3	0.00	0.0188	1.93			O	0.0376
Semivolatile Organic Compounds (mg/kg)									
1,2,4-Trichlorobenzene		0/10	0.00	0.245	69.1			O	0.49
1,2-Dichlorobenzene		0/10	0.00	0.245	69.1			O	0.49
1,3-Dichlorobenzene		0/10	0.00	0.245	69.1			O	0.49
1,4-Dichlorobenzene		0/10	0.00	0.245	69.1			O	0.49
1-Methylnaphthalene		0/1	0.00	0.18				O	0.36
2,2'-Oxybis (1-chloropropane)		0/9	0.00	0.251	70.9			O	0.503
2,4,5-Trichlorophenol		0/10	0.00	0.554	82.7			O	1.11
2,4,6-Trichlorophenol		0/10	0.00	0.245	69.1			O	0.49
2,4-Dichlorophenol		0/10	0.00	0.245	69.1			O	0.49
2,4-Dimethylphenol		0/10	0.00	0.245	69.1			O	0.49
2,4-Dinitrophenol		0/10	0.00	0.593	72.7			O	1.19
2,4-Dinitrotoluene		0/10	0.00	0.245	69.1			O	0.49
2,6-Dinitrotoluene		0/10	0.00	0.245	69.1			O	0.49
2-Chloronaphthalene		0/11	0.00	0.24	67.5			O	0.479
2-Chlorophenol		0/10	0.00	0.245	69.1			O	0.49
2-Methylnaphthalene		0/11	0.00	0.239	67.7			O	0.478
2-Methylphenol		0/10	0.00	0.245	69.1			O	0.49
2-Nitroaniline		0/10	0.00	0.554	82.7			O	1.11
2-Nitrophenol		0/10	0.00	0.245	69.1			O	0.49
3,3'-Dichlorobenzidine		0/10	0.00	0.605	63.4			O	1.21
3-Nitroaniline		0/10	0.00	0.554	82.7			O	1.11
4,6-Dinitro-o-cresol		0/10	0.00	0.593	72.7			O	1.19
4-Bromophenyl-phenyl ether		0/10	0.00	0.245	69.1			O	0.49

Note: Footnotes appear on page F-33.

Table F-7. Statistical Analysis of Surface Soil Background Data (continued)

Analyte	USGS Eastern U.S. Reference	Results >Det. Limit	%Results >Det. Limit	Average Result	CV	Min Detect	Max Detect	Dist.[a]	Reference Background Criteria[b]
4-Chloroaniline		0/10	0.00	0.245	69.1			O	0.49
4-Chlorophenyl-phenyl ether		0/10	0.00	0.245	69.1			O	0.49
4-Methylphenol		0/10	0.00	0.245	69.1			O	0.49
4-Nitroaniline		0/10	0.00	0.554	82.7			O	1.11
4-Nitrophenol		0/10	0.00	0.593	72.7			O	1.19
4-Chloro-3-methylphenol		0/10	0.00	0.245	69.1			O	0.49
Acenaphthene		0/12	0.00	0.235	66.1			O	0.469
Acenaphthylene		0/12	0.00	0.235	66.1			O	0.469
Anthracene		0/12	0.00	0.235	66.1			O	0.469
Benzo(*a*)anthracene		0/12	0.00	0.235	66.1			O	0.469
Benzo(*a*)pyrene		0/12	0.00	0.235	66.1			O	0.469
Benzo(*b*)fluoranthene		0/13	0.00	0.23	64.8			O	0.461
Benzo(*g,h,i*)perylene		0/12	0.00	0.235	66.1			O	0.469
Benzo(*k*)fluoranthene		0/12	0.00	0.235	66.1			O	0.469
Benzoic acid		0/1	0.00	0.373				O	0.746
Benzyl alcohol		0/1	0.00	0.187				O	0.373
Bis(2-chloroisopropyl)ether		0/1	0.00	0.187				O	0.373
Bis(2-chloroethoxy)methane		0/10	0.00	0.245	69.1			O	0.49
Bis(2-chloroethyl)ether		0/10	0.00	0.245	69.1			O	0.49
Bis(2-ethylhexyl)phthalate		0/10	0.00	0.245	69.1			O	0.49
Butyl benzyl phthalate		0/10	0.00	0.245	69.1			O	0.49
Carbazole		0/10	0.00	0.245	69.1			O	0.49
Chrysene		0/12	0.00	0.235	66.1			O	0.469
Di-*N*-butyl phthalate		0/10	0.00	0.245	69.1			O	0.49
Di-*N*-octyl phthalate		0/10	0.00	0.245	69.1			O	0.49
Dibenzo(*a,h*)anthracene		0/12	0.00	0.235	66.1			O	0.469
Dibenzofuran		0/10	0.00	0.245	69.1			O	0.49
Diethyl phthalate		0/10	0.00	0.245	69.1			O	0.49
Dimethyl phthalate		0/10	0.00	0.245	69.1			O	0.49
Fluoranthene		0/12	0.00	0.235	66.1			O	0.469
Fluorene		0/12	0.00	0.235	66.1			O	0.469

Note: Footnotes appear on page F-33.

Table F-7. Statistical Analysis of Surface Soil Background Data (continued)

Analyte	USGS Eastern U.S. Reference	Results >Det. Limit	%Results >Det. Limit	Average Result	CV	Min Detect	Max Detect	Dist.[a]	Reference Background Criteria[b]
Hexachlorobenzene		0/10	0.00	0.245	69.1			O	0.49
Hexachlorobutadiene		0/10	0.00	0.245	69.1			O	0.49
Hexachlorocyclopentadiene		0/10	0.00	0.245	69.1			O	0.49
Hexachloroethane		0/10	0.00	0.245	69.1			O	0.49
Indeno(*1,2,3-cd*)pyrene		0/12	0.00	0.235	66.1			O	0.469
Isophorone		0/10	0.00	0.245	69.1			O	0.49
N-Nitroso-di-*N*-propylamine		0/10	0.00	0.245	69.1			O	0.49
N-Nitrosodiphenylamine		0/10	0.00	0.245	69.1			O	0.49
Naphthalene		0/12	0.00	0.235	66.1			O	0.469
Nitrobenzene		0/10	0.00	0.245	69.1			O	0.49
Pentachlorophenol		0/10	0.00	0.554	82.7			O	1.11
Phenanthrene		0/12	0.00	0.235	66.1			O	0.469
Phenol		0/10	0.00	0.245	69.1			O	0.49
Pyrene		0/12	0.00	0.235	66.1			O	0.469
Volatile Organic Compounds (mg/kg)									
1,1,1-Trichloroethane		0/10	0.00	0.00295	37.7			O	0.00589
1,1,2,2-Tetrachloroethane		0/10	0.00	0.00295	37.7			O	0.00589
1,1,2-Trichloroethane		0/10	0.00	0.00295	37.7			O	0.00589
1,1-Dichloroethane		0/10	0.00	0.00295	37.7			O	0.00589
1,1-Dichloroethene		2/10	20.00	0.00248	63.6	0.00	0.00	D	0.00495
1,2-Dichloroethane		0/10	0.00	0.00295	37.7			O	0.00589
1,2-Dichloroethene		0/8	0.00	0.00283	5.27			O	0.00565
1,2-Dichloropropane		0/10	0.00	0.00295	37.7			O	0.00589
1,2-*cis*-Dichloroethene		0/2	0.00	0.00343	93.9			O	0.00685
1,2-*trans*-Dichloroethene		0/2	0.00	0.00343	93.9			O	0.00685
1,3-*cis*-Dichloropropene		0/10	0.00	0.00295	37.7			O	0.00589
1,3-*trans*-Dichloropropene		0/10	0.00	0.00295	37.7			O	0.00589
2-Butanone		1/6	16.67	0.00548	61.4	0.00	0.00	D	0.011
2-Hexanone		1/10	10.00	0.00545	47.9	0.00	0.00	D	0.0109
4-Methyl-2-pentanone		1/10	10.00	0.00545	47.9	0.00	0.00	D	0.0109
Acetone		2/7	28.57	0.00728	66	0.00	0.01	D	0.0146

Note: Footnotes appear on page F-33.

Table F-7. Statistical Analysis of Surface Soil Background Data (continued)

Analyte	USGS Eastern U.S. Reference	Results >Det. Limit	%Results >Det. Limit	Average Result	CV	Min Detect	Max Detect	Dist.[a]	Reference Background Criteria[b]
Benzene		1/11	9.09	0.00272	47.8	0.00	0.00	D	0.00544
Bromodichloromethane		0/10	0.00	0.00295	37.7			O	0.00589
Bromoform		0/10	0.00	0.00295	37.7			O	0.00589
Bromomethane		1/10	10.00	0.00535	51.1	0.00	0.00	D	0.0107
Carbon disulfide		1/10	10.00	0.00298	34.8	0.00	0.00	D	0.00595
Carbon tetrachloride		0/10	0.00	0.00295	37.7			O	0.00589
Chlorobenzene		0/10	0.00	0.00295	37.7			O	0.00589
Chloroethane		0/10	0.00	0.00576	42.2			O	0.0115
Chloroform		0/10	0.00	0.00295	37.7			O	0.00589
Chloromethane		0/10	0.00	0.00576	42.2			O	0.0115
Dibromochloromethane		0/10	0.00	0.00295	37.7			O	0.00589
Ethylbenzene		1/11	9.09	0.00273	47.4	0.00	0.00	D	0.00546
Methylene chloride		0/10	0.00	0.0037	45.8			O	0.00739
Styrene		0/10	0.00	0.00295	37.7			O	0.00589
Tetrachloroethene		0/10	0.00	0.00295	37.7			O	0.00589
Toluene		6/11	54.55	0.00609	122	0.00	0.03	L	0.0122
Trichloroethene		1/10	10.00	0.00272	50.8	0.00	0.00	D	0.00544
Vinyl chloride		0/10	0.00	0.00576	42.2			O	0.0115
Xylenes, total		0/11	0.00	0.00293	36			O	0.00585
Radionuclides (pCi/g)									
Radium-226		1/1	100.00	0.428		0.43	0.43	X	0.856
Radium-228		1/1	100.00	0.851		0.85	0.85	X	1.7

[a]Results less than the detection limit were set to one-half the reported detection limit. For radionuclides, the reported result was used to calculate the mean.
Distribution codes:
D = Distribution not determined because fewer than 5 detects or less than 50 percent detects (t-distribution).
L = Distribution most similar to lognormal [land statistic used for upper confidence limit (UCL)].
N = Distribution most similar to normal (t-distribution used for UCL).
O = Analyte not detected in any sample.
X = Distribution significantly different from normal and lognormal (t-distribution used for UCL).
[b]If a chemical was not detected, the reference background criterion was the mean of the detection limit. However, organic constituents were screened against zero because they are considered man-made.

Table F-8. Statistical Analysis of Subsurface Soil Background Data

Analyte	USGS Eastern U.S. Reference	Results >Det. Limit	%Results >Det. Limit	Average Result	CV	Min Detect	Max Detect	Dist.[a]	Reference Background Criteria[b]
Metals (mg/kg)									
Arsenic	7.40	8/17	47.06	4.02	334	0.44	56.00	D	8.04
Barium	420.00	19/19	100.00	8.49	101	1.10	30.00	L	17
Cadmium	2.00	0/17	0.00	0.115	109			O	0.231
Chromium	52.00	19/19	100.00	5.81	84.5	0.76	19.00	L	11.6
Lead	17.00	19/19	100.00	5.56	103	1.10	23.00	L	11.1
Mercury	0.12	9/17	52.94	0.024	81.4	0.01	0.06	L	0.048
Selenium	0.45	1/14	7.14	0.558	131	0.67	0.67	D	1.12
Silver	2.80	0/16	0.00	0.227	115			O	0.453
Other Analytes									
Total organic carbon		1/1	100.00	1100		1,100.00	1,100.00	X	2200
Pesticides/PCBs (mg/kg)									
4,4'-DDD		0/3	0.00	0.00075	6.67			O	0.0015
4,4'-DDE		0/3	0.00	0.00075	6.67			O	0.0015
4,4'-DDT		0/3	0.00	0.00075	6.67			O	0.0015
Aldrin		0/3	0.00	0.000378	3.33			O	0.000757
alpha-Chlordane		0/3	0.00	0.000378	3.33			O	0.000757
alpha-BHC		1/3	33.33	0.000562	56.8	0.00	0.00	D	0.00112
Aroclor-1016		0/3	0.00	0.00188	4.06			O	0.00377
Aroclor-1221		0/3	0.00	0.00188	4.06			O	0.00377
Aroclor-1232		0/3	0.00	0.00188	4.06			O	0.00377
Aroclor-1242		0/3	0.00	0.00188	4.06			O	0.00377
Aroclor-1248		0/3	0.00	0.00188	4.06			O	0.00377
Aroclor-1254		0/3	0.00	0.00188	4.06			O	0.00377
Aroclor-1260		0/3	0.00	0.00188	4.06			O	0.00377
beta-BHC		0/3	0.00	0.000378	3.33			O	0.000757
delta-BHC		0/3	0.00	0.000378	3.33			O	0.000757
Dieldrin		0/3	0.00	0.00075	6.67			O	0.0015
Endosulfan I		0/3	0.00	0.000378	3.33			O	0.000757
Endosulfan II		0/3	0.00	0.00075	6.67			O	0.0015
Endosulfan sulfate		0/3	0.00	0.00075	6.67			O	0.0015

Note: Footnotes appear on page F-38.

Table F-8. Statistical Analysis of Subsurface Soil Background Data (continued)

Analyte	USGS Eastern U.S. Reference	Results >Det. Limit	%Results >Det. Limit	Average Result	CV	Min Detect	Max Detect	Dist.[a]	Reference Background Criteria[b]
Endrin		0/3	0.00	0.00075	6.67			O	0.0015
Endrin ketone		0/3	0.00	0.00075	6.67			O	0.0015
Gamma chlordane		0/3	0.00	0.000378	3.33			O	0.000757
gamma-BHC (Lindane)		0/3	0.00	0.000378	3.33			O	0.000757
Heptachlor		0/3	0.00	0.000378	3.33			O	0.000757
Heptachlor epoxide		0/3	0.00	0.000378	3.33			O	0.000757
Methoxychlor		0/3	0.00	0.00378	3.33			O	0.00757
Toxaphene		0/3	0.00	0.0189	3.58			O	0.0378
Semivolatile Organic Compounds (mg/kg)									
1,2,4-Trichlorobenzene		1/9	11.11	0.241	90.5	0.00	0.00	D	0.481
1,2-Dichlorobenzene		0/9	0.00	0.26	77.1			O	0.521
1,3-Dichlorobenzene		0/9	0.00	0.26	77.1			O	0.521
1,4-Dichlorobenzene		0/9	0.00	0.26	77.1			O	0.521
1-Methylnaphthalene		0/1	0.00	0.185				O	0.37
2,2'-Oxybis (1-chloropropane)		0/9	0.00	0.26	77.1			O	0.521
2,4,5-Trichlorophenol		0/9	0.00	0.618	84.4			O	1.24
2,4,6-Trichlorophenol		0/9	0.00	0.26	77.1			O	0.521
2,4-Dichlorophenol		0/9	0.00	0.26	77.1			O	0.521
2,4-Dimethylphenol		0/9	0.00	0.26	77.1			O	0.521
2,4-Dinitrophenol		0/9	0.00	0.64	79			O	1.28
2,4-Dinitrotoluene		0/9	0.00	0.26	77.1			O	0.521
2,6-Dinitrotoluene		0/9	0.00	0.26	77.1			O	0.521
2-Chloronaphthalene		0/10	0.00	0.253	75.3			O	0.506
2-Chlorophenol		0/9	0.00	0.26	77.1			O	0.521
2-Methylnaphthalene		0/10	0.00	0.253	75.4			O	0.506
2-Methylphenol		0/9	0.00	0.26	77.1			O	0.521
2-Nitroaniline		0/9	0.00	0.618	84.4			O	1.24
2-Nitrophenol		0/9	0.00	0.26	77.1			O	0.521
3,3'-Dichlorobenzidine		0/9	0.00	0.586	72.5			O	1.17
3-Nitroaniline		0/9	0.00	0.618	84.4			O	1.24

Note: Footnotes appear on page F-38.

Table F-8. Statistical Analysis of Subsurface Soil Background Data (continued)

Analyte	USGS Eastern U.S. Reference	Results >Det. Limit	%Results >Det. Limit	Average Result	CV	Min Detect	Max Detect	Dist.[a]	Reference Background Criteria[b]
4,6-Dinitro-o-cresol		0/9	0.00	0.64	79			O	1.28
4-Bromophenyl-phenyl ether		0/9	0.00	0.26	77.1			O	0.521
4-Chloroaniline		0/9	0.00	0.26	77.1			O	0.521
4-Chlorophenyl-phenyl ether		0/9	0.00	0.26	77.1			O	0.521
4-Methylphenol		0/9	0.00	0.26	77.1			O	0.521
4-Nitroaniline		0/9	0.00	0.618	84.4			O	1.24
4-Nitrophenol		0/9	0.00	0.64	79			O	1.28
4-Chloro-3-methylphenol		0/9	0.00	0.26	77.1			O	0.521
Acenaphthene		0/11	0.00	0.247	73.7			O	0.494
Acenaphthylene		0/11	0.00	0.247	73.7			O	0.494
Anthracene		0/11	0.00	0.247	73.7			O	0.494
Benzo(*a*)anthracene		0/11	0.00	0.247	73.7			O	0.494
Benzo(*a*)pyrene		0/11	0.00	0.247	73.7			O	0.494
Benzo(*b*)fluoranthene		0/11	0.00	0.247	73.7			O	0.494
Benzo(*g,h,i*)perylene		0/11	0.00	0.247	73.7			O	0.494
Benzo(*k*)fluoranthene		0/11	0.00	0.247	73.7			O	0.494
Benzoic acid		0/9	0.00	0.26	77.1			O	0.521
Benzyl alcohol		0/9	0.00	0.26	77.1			O	0.521
Bis(2-chloroisopropyl)ether		1/9	11.11	0.318	77.9	0.71	0.71	D	0.637
Bis(2-chloroethoxy)methane		0/9	0.00	0.26	77.1			O	0.521
Bis(2-chloroethyl)ether		0/9	0.00	0.26	77.1			O	0.521
Bis(2-ethylhexyl)phthalate		0/11	0.00	0.247	73.7			O	0.494
Butyl benzyl phthalate		1/9	11.11	0.261	77	0.19	0.19	D	0.521
Carbazole		0/9	0.00	0.26	77.1			O	0.521
Chrysene		0/11	0.00	0.247	73.7			O	0.494
Di-*N*-butyl phthalate		0/9	0.00	0.26	77.1			O	0.521
Di-*N*-octyl phthalate		0/9	0.00	0.26	77.1			O	0.521
Dibenzo(*a,h*)anthracene		0/9	0.00	0.26	77.1			O	0.521
Dibenzofuran		1/12	8.33	7.14	334	83.00	83.00	D	14.3
Diethyl phthalate		0/11	0.00	0.247	73.7			O	0.494
Dimethyl phthalate		0/9	0.00	0.26	77.1			O	0.521

Note: Footnotes appear on page F-38.

Table F-8. Statistical Analysis of Subsurface Soil Background Data (continued)

Analyte	USGS Eastern U.S. Reference	Results >Det. Limit	%Results >Det. Limit	Average Result	CV	Min Detect	Max Detect	Dist.[a]	Reference Background Criteria[b]
Fluoranthene		0/9	0.00	0.26	77.1			O	0.521
Fluorene		0/9	0.00	0.26	77.1			O	0.521
Hexachlorobenzene		0/9	0.00	0.26	77.1			O	0.521
Hexachlorobutadiene		0/11	0.00	0.247	73.7			O	0.494
Hexachlorocyclopentadiene		0/9	0.00	0.26	77.1			O	0.521
Hexachloroethane		0/9	0.00	0.26	77.1			O	0.521
Indeno(*1,2,3-cd*)pyrene		0/9	0.00	0.26	77.1			O	0.521
Isophorone		0/11	0.00	0.247	73.7			O	0.494
N-Nitroso-di-*N*-propylamine		0/9	0.00	0.26	77.1			O	0.521
N-Nitrosodiphenylamine		0/9	0.00	0.618	84.4			O	1.24
Naphthalene		0/11	0.00	0.247	73.7			O	0.494
Nitrobenzene		0/9	0.00	0.26	77.1			O	0.521
Pentachlorophenol		1/12	8.33	7.31	335	85.00	85.00	D	14.6
Phenanthrene		0/16	0.00	0.00285	33.2			O	0.00569
Phenol		0/10	0.00	0.00285	42.9			O	0.00569
Pyrene		0/11	0.00	0.00285	40.7			O	0.00569
Volatile Organic Compounds (mg/kg)									
1,1-Dichloroethane		0/11	0.00	0.00285	40.7			O	0.00569
1,1-Dichloroethene		0/11	0.00	0.00285	40.7			O	0.00569
1,2-Dichloroethane		0/11	0.00	0.00285	40.7			O	0.00569
1,2-Dichloroethene		0/8	0.00	0.00294	4.62			O	0.00588
1,2-Dichloropropane		0/11	0.00	0.00285	40.7			O	0.00569
1,2-*cis*-Dichloroethene		0/3	0.00	0.0026	98.3			O	0.0052
1,2-*trans*-Dichloroethene		0/3	0.00	0.0026	98.3			O	0.0052
1,3-*cis*-Dichloropropene		0/11	0.00	0.00285	40.7			O	0.00569
1,3-*trans*-Dichloropropene		0/11	0.00	0.00285	40.7			O	0.00569
2-Butanone		1/7	14.29	0.00505	64.3	0.00	0.00	D	0.0101
2-Hexanone		1/11	9.09	0.00535	48.2	0.00	0.00	D	0.0107
4-Methyl-2-pentanone		1/11	9.09	0.00535	48.2	0.00	0.00	D	0.0107
Acetone		6/15	40.00	0.0249	110	0.01	0.11	D	0.0498
Benzene		0/17	0.00	0.00284	32.2			O	0.00569

Note: Footnotes appear on page F-38.

Table F-8. Statistical Analysis of Subsurface Soil Background Data (continued)

Analyte	USGS Eastern U.S. Reference	Results >Det. Limit	%Results >Det. Limit	Average Result	CV	Min Detect	Max Detect	Dist.[a]	Reference Background Criteria[b]
Bromodichloromethane		0/11	0.00	0.00285	40.7			O	0.00569
Bromoform		0/11	0.00	0.00285	40.7			O	0.00569
Bromomethane		1/11	9.09	0.00513	55.8	0.00	0.00	D	0.0103
Carbon disulfide		1/16	6.25	0.00298	25	0.00	0.00	D	0.00596
Carbon tetrachloride		0/11	0.00	0.00285	40.7			O	0.00569
Chlorobenzene		0/11	0.00	0.00285	40.7			O	0.00569
Chloroethane		0/11	0.00	0.00549	48.6			O	0.011
Chloroform		0/11	0.00	0.00285	40.7			O	0.00569
Chloromethane		0/11	0.00	0.00549	48.6			O	0.011
Dibromochloromethane		0/11	0.00	0.00285	40.7			O	0.00569
Ethylbenzene		0/17	0.00	0.00284	32.2			O	0.00569
Methylene chloride		1/16	6.25	0.0032	35.1	0.01	0.01	D	0.00639
Styrene		0/11	0.00	0.00285	40.7			O	0.00569
Tetrachloroethene		1/16	6.25	0.00305	40.9	0.01	0.01	D	0.0061
Toluene		5/17	29.41	0.00406	115	0.00	0.02	D	0.00813
Trichloroethene		0/11	0.00	0.00285	40.7			O	0.00569
Vinyl chloride		0/11	0.00	0.00549	48.6			O	0.011
Xylenes, total		2/17	11.76	0.00416	114	0.01	0.02	D	0.00833
Radionuclides (pCi/g)									
Radium-226		1/1	100.00	0.547		0.55	0.55	X	1.09
Radium-228		1/1	100.00	0.445		0.45	0.45	X	0.89

[a]Results less than the detection limit were set to one-half the reported detection limit. For radionuclides, the reported result was used to calculate the mean.
Distribution codes:
D = Distribution not determined because fewer than 5 detects or less than 50 percent detects (t-distribution).
L = Distribution most similar to lognormal [land statistic used for upper confidence limit (UCL)].
N = Distribution most similar to normal (t-distribution used for UCL).
O = Analyte not detected in any sample.
X = Distribution significantly different from normal and lognormal (t-distribution used for UCL).
[b]If a chemical was not detected, the reference background criterion was the mean of the detection limit. However, organic constituents were screened against zero because they are considered man-made.

Table F-9. Statistical Analysis of Groundwater Background Data

Analyte	Results >Det. Limit	%Results >Det. Limit	Average Result	CV	Min Detect	Max Detect	Dist.[a]	Reference Background Criteria[b]
Anions (µg/L)								
Alkalinity	1/1	100.00	45,100.00		45,100.00	45,100.00	X	90,200.00
Nitrate	0/1	0.00	250.00				O	500.00
Nitrite	0/1	0.00	250.00				O	500.00
Sulfate	8/8	100.00	13,400.00	110.00	1,100.00	38,900.00	L	26,717.50
Sulfide	0/1	0.00	50.00				O	100.00
Metals (µg/L)								
Aluminum	1/1	100.00	1,200.00		1,200.00	1,200.00	X	2,400.00
Antimony	0/1	0.00	1.20				O	2.40
Arsenic	1/18	5.56	1.51	147.14	10.10	10.10	D	3.02
Barium	17/18	94.44	35.90	109.00	3.80	177.00	L	71.72
Beryllium	0/1	0.00	0.08				O	0.15
Cadmium	4/16	25.00	0.21	121.03	0.32	1.10	D	0.43
Calcium	1/1	100.00	1,630.00		1,630.00	1,630.00	X	3,260.00
Chromium	12/18	66.67	1.78	107.61	0.52	7.30	L	3.56
Cobalt	0/1	0.00	0.23				O	0.46
Copper	1/1	100.00	2.00		2.00	2.00	X	4.00
Iron	2/2	100.00	2,190.00	102.79	598.00	3,780.00	N	4,378.00
Lead	8/18	44.44	2.35	250.54	0.08	25.50	D	4.69
Magnesium	1/1	100.00	814.00		814.00	814.00	X	1,628.00
Manganese	1/1	100.00	17.30		17.30	17.30	X	34.60
Mercury	3/18	16.67	0.07	107.16	0.20	0.28	D	0.14
Nickel	1/1	100.00	1.90		1.90	1.90	X	3.80
Potassium	1/1	100.00	643.00		643.00	643.00	X	1,286.00
Selenium	2/17	11.76	0.95	68.62	0.62	2.50	D	1.90
Silver	5/18	27.78	0.56	196.74	0.08	4.90	D	1.12
Sodium	1/1	100.00	3,520.00		3,520.00	3,520.00	X	7,040.00
Thallium	0/1	0.00	1.60				O	3.20
Vanadium	1/1	100.00	2.00		2.00	2.00	X	4.00
Zinc	0/1	0.00	8.45				O	16.90

Note: Footnotes appear on page F-45.

Table F-9. Statistical Analysis of Groundwater Background Data (continued)

Analyte	Results >Det. Limit	%Results >Det. Limit	Average Result	CV	Min Detect	Max Detect	Dist.[a]	Reference Background Criteria[b]
Other Analytes (µg/L)								
Total organic carbon	1/1	100.00	3,160.00		3,160.00	3,160.00	X	6,320.00
Volatile Organic Compounds (µg/L)								
Ethane	0/1	0.00	2.50				O	5.00
Ethene	0/1	0.00	2.50				O	5.00
Methane	1/1	100.00	53.70		53.70	53.70	X	107.40
Explosives (µg/L)								
1,3,5-Trinitrobenzene	0/1	0.00	1.00				O	2.00
1,3-Dinitrobenzene	0/1	0.00	1.50				O	3.00
2,4,6-Trinitrotoluene	0/1	0.00	1.50				O	3.00
2,4-Dinitrotoluene	0/1	0.00	0.05				O	0.10
2,6-Dinitrotoluene	0/1	0.00	0.05				O	0.10
2-Nitrotoluene	0/1	0.00	5.00				O	10.00
3-Nitrotoluene	0/1	0.00	5.00				O	10.00
4-Nitrotoluene	0/1	0.00	5.00				O	10.00
HMX	0/1	0.00	10.00				O	20.00
Nitrobenzene	0/1	0.00	5.00				O	10.00
RDX	0/1	0.00	10.00				O	20.00
Tetryl	0/1	0.00	25.00				O	50.00
Pesticides/PCBs (µg/L)								
4,4'-DDD	0/3	0.00	0.02	0.00			O	0.04
4,4'-DDE	0/3	0.00	0.02	0.00			O	0.04
4,4'-DDT	0/3	0.00	0.02	0.00			O	0.04
Aldrin	0/3	0.00	0.01	0.00			O	0.02
alpha-Chlordane	0/3	0.00	0.01	0.00			O	0.02
alpha-BHC	0/3	0.00	0.01	0.00			O	0.02
Aroclor-1016	0/3	0.00	0.05	0.58			O	0.10
Aroclor-1221	0/3	0.00	0.05	0.58			O	0.10
Aroclor-1232	0/3	0.00	0.05	0.58			O	0.10
Aroclor-1242	0/3	0.00	0.05	0.58			O	0.10

Note: Footnotes appear on page F-45.

Table F-9. Statistical Analysis of Groundwater Background Data (continued)

Analyte	Results >Det. Limit	%Results >Det. Limit	Average Result	CV	Min Detect	Max Detect	Dist.[a]	Reference Background Criteria[b]
Aroclor-1248	0/3	0.00	0.05	0.58			O	0.10
Aroclor-1254	0/3	0.00	0.05	0.58			O	0.10
Aroclor-1260	0/3	0.00	0.05	0.58			O	0.10
beta-BHC	0/3	0.00	0.01	0.00			O	0.02
delta-BHC	0/3	0.00	0.01	0.00			O	0.02
Dieldrin	0/3	0.00	0.02	0.00			O	0.04
Endosulfan I	0/3	0.00	0.01	0.00			O	0.02
Endosulfan II	0/3	0.00	0.02	0.00			O	0.04
Endosulfan sulfate	0/3	0.00	0.02	0.00			O	0.04
Endrin	0/3	0.00	0.02	0.00			O	0.04
Endrin aldehyde	0/2	0.00	0.02	0.00			O	0.04
Endrin ketone	0/3	0.00	0.02	0.00			O	0.04
gamma Chlordane	0/3	0.00	0.01	0.00			O	0.02
gamma-BHC (Lindane)	0/3	0.00	0.01	0.00			O	0.02
Heptachlor	0/3	0.00	0.01	0.00			O	0.02
Heptachlor epoxide	0/3	0.00	0.01	0.00			O	0.02
Methoxychlor	0/3	0.00	0.10	0.00			O	0.20
Toxaphene	0/3	0.00	0.50	0.58			O	0.99
Semivolatile Organic Compounds (µg/L)								
1,2,4-Trichlorobenzene	0/11	0.00	5.05	2.28			O	10.10
1,2-Dichlorobenzene	0/11	0.00	5.05	2.28			O	10.10
1,3-Dichlorobenzene	0/11	0.00	5.05	2.28			O	10.10
1,4-Dichlorobenzene	0/11	0.00	5.05	2.28			O	10.10
2,2'-Oxybis (1-chloropropane)	0/11	0.00	5.05	2.28			O	10.10
2,4,5-Trichlorophenol	0/10	0.00	12.60	2.14			O	25.20
2,4,6-Trichlorophenol	0/10	0.00	5.03	2.16			O	10.06
2,4-Dichlorophenol	0/10	0.00	5.03	2.16			O	10.06
2,4-Dimethylphenol	0/10	0.00	5.03	2.16			O	10.06
2,4-Dinitrophenol	0/10	0.00	12.60	2.14			O	25.20
2,4-Dinitrotoluene	0/11	0.00	5.05	2.28			O	10.10
2,6-Dinitrotoluene	0/11	0.00	5.05	2.28			O	10.10

Note: Footnotes appear on page F-45.

Table F-9. Statistical Analysis of Groundwater Background Data (continued)

Analyte	Results >Det. Limit	%Results >Det. Limit	Average Result	CV	Min Detect	Max Detect	Dist.[a]	Reference Background Criteria[b]
2-Chloronaphthalene	0/12	0.00	4.23	45.64			O	8.46
2-Chlorophenol	0/10	0.00	5.03	2.16			O	10.06
2-Methylnaphthalene	0/11	0.00	5.05	2.28			O	10.10
2-Methylphenol	0/10	0.00	5.03	2.16			O	10.06
2-Nitroaniline	0/11	0.00	12.60	2.26			O	25.20
2-Nitrophenol	0/10	0.00	5.03	2.16			O	10.06
3,3'-Dichlorobenzidine	0/11	0.00	10.10	2.28			O	20.20
3-Nitroaniline	0/11	0.00	12.60	2.26			O	25.20
4,6-Dinitro-o-cresol	0/10	0.00	12.60	2.14			O	25.20
4-Bromophenyl-phenyl ether	0/11	0.00	5.05	2.28			O	10.10
4-Chloroaniline	0/11	0.00	5.05	2.28			O	10.10
4-Chlorophenyl-phenylether	0/11	0.00	5.05	2.28			O	10.10
4-Methylphenol	0/10	0.00	5.03	2.16			O	10.06
4-Nitroaniline	0/11	0.00	12.60	2.26			O	25.20
4-Nitrophenol	0/10	0.00	12.60	2.14			O	25.20
4-Chloro-3-methylphenol	0/10	0.00	5.03	2.16			O	10.06
Acenaphthene	0/12	0.00	4.23	45.64			O	8.46
Acenaphthylene	0/12	0.00	4.23	45.64			O	8.46
Anthracene	0/12	0.00	4.23	45.64			O	8.46
Benzo(*a*)anthracene	0/12	0.00	4.23	45.64			O	8.46
Benzo(*a*)pyrene	0/12	0.00	4.23	45.64			O	8.46
Benzo(*b*)fluoranthene	0/12	0.00	4.23	45.64			O	8.46
Benzo(*g,h,i*)perylene	0/12	0.00	4.23	45.64			O	8.46
Benzo(*k*)fluoranthene	0/12	0.00	4.23	45.64			O	8.46
Bis(2-chloroethoxy)methane	0/11	0.00	5.05	2.28			O	10.10
Bis(2-chloroethyl)ether	0/11	0.00	5.05	2.28			O	10.10
Bis(2-ethylhexyl)phthalate	0/11	0.00	5.05	2.28			O	10.10
Butyl benzyl phthalate	0/11	0.00	5.05	2.28			O	10.10
Carbazole	0/11	0.00	5.05	2.28			O	10.10
Chrysene	0/12	0.00	4.23	45.64			O	8.46
Di-*N*-butyl phthalate	0/11	0.00	5.05	2.28			O	10.10

Note: Footnotes appear on page F-45.

Table F-9. Statistical Analysis of Groundwater Background Data (continued)

Analyte	Results >Det. Limit	%Results >Det. Limit	Average Result	CV	Min Detect	Max Detect	Dist.[a]	Reference Background Criteria[b]
Di-*N*-octyl phthalate	0/11	0.00	5.05	2.28			O	10.10
Dibenzo(*a,h*)anthracene	0/12	0.00	4.23	45.64			O	8.46
Dibenzofuran	0/11	0.00	5.05	2.28			O	10.10
Diethyl phthalate	0/11	0.00	5.05	2.28			O	10.10
Dimethyl phthalate	0/11	0.00	5.05	2.28			O	10.10
Fluoranthene	0/12	0.00	4.23	45.64			O	8.46
Fluorene	0/12	0.00	4.23	45.64			O	8.46
Hexachlorobenzene	0/11	0.00	5.05	2.28			O	10.10
Hexachlorobutadiene	0/11	0.00	5.05	2.28			O	10.10
Hexachlorocyclopentadiene	0/11	0.00	5.05	2.28			O	10.10
Hexachloroethane	0/11	0.00	5.05	2.28			O	10.10
Indeno(*1,2,3-cd*)pyrene	0/12	0.00	4.23	45.64			O	8.46
Isophorone	0/11	0.00	5.05	2.28			O	10.10
N-Nitroso-di-*N*-propylamine	0/11	0.00	5.05	2.28			O	10.10
N-Nitrosodiphenylamine	0/11	0.00	5.05	2.28			O	10.10
Naphthalene	0/12	0.00	4.23	45.64			O	8.46
Nitrobenzene	0/11	0.00	5.05	2.28			O	10.10
Pentachlorophenol	0/10	0.00	12.60	2.14			O	25.20
Phenanthrene	0/12	0.00	4.23	45.64			O	8.46
Phenol	0/10	0.00	5.03	2.16			O	10.06
Pyrene	0/12	0.00	4.63	30.87			O	9.26
Volatile Organic Compounds (µg/L)								
1,1,1-Trichloroethane	1/17	5.88	1.75	48.08	0.23	0.23	D	3.50
1,1,2,2-Tetrachloroethane	0/17	0.00	1.88	40.43			O	3.76
1,1,2-Trichloroethane	0/17	0.00	1.88	40.43			O	3.76
1,1-Dichloroethane	1/17	5.88	1.77	45.82	0.53	0.53	D	3.54
1,1-Dichloroethene	0/17	0.00	1.88	40.43			O	3.76
1,2-Dichloroethane	0/17	0.00	1.88	40.43			O	3.76
1,2-Dichloroethene	0/9	0.00	2.50	0.00			O	5.00
1,2-Dichloropropane	0/17	0.00	1.88	40.43			O	3.76
1,2-*cis*-Dichloroethene	0/8	0.00	1.19	44.66			O	2.38

Note: Footnotes appear on page F-45.

Table F-9. Statistical Analysis of Groundwater Background Data (continued)

Analyte	Results >Det. Limit	%Results >Det. Limit	Average Result	CV	Min Detect	Max Detect	Dist.[a]	Reference Background Criteria[b]
1,2-*trans*-Dichloroethene	0/8	0.00	1.19	44.66			O	2.38
1,3-*cis*-Dichloropropene	0/17	0.00	1.88	40.43			O	3.76
1,3-*trans*-Dichloropropene	1/17	5.88	1.75	48.00	0.24	0.24	D	3.50
2-Butanone	0/9	0.00	3.06	36.08			O	6.12
2-Hexanone	0/17	0.00	3.97	31.94			O	7.94
4-Methyl-2-pentanone	0/12	0.00	4.58	21.23			O	9.16
Acetone	3/14	21.43	3.61	37.06	1.70	5.20	D	7.22
Benzene	0/17	0.00	1.53	48.31			O	3.06
Bromodichloromethane	0/17	0.00	1.88	40.43			O	3.76
Bromoform	0/17	0.00	1.88	40.43			O	3.76
Bromomethane	0/17	0.00	3.35	60.52			O	6.70
Carbon disulfide	0/17	0.00	2.50	0.00			O	5.00
Carbon tetrachloride	0/17	0.00	1.88	40.43			O	3.76
Chlorobenzene	0/17	0.00	1.88	40.43			O	3.76
Chloroethane	0/17	0.00	3.35	60.52			O	6.70
Chloroform	0/17	0.00	1.88	40.43			O	3.76
Chloromethane	1/17	5.88	3.71	57.23	7.10	7.10	D	7.42
Dibromochloromethane	0/17	0.00	1.88	40.43			O	3.76
Ethylbenzene	3/17	17.65	1.49	61.47	0.21	0.34	D	2.98
Methylene chloride	1/17	5.88	2.04	34.17	2.10	2.10	D	4.08
Styrene	0/17	0.00	1.88	40.43			O	3.76
Tetrachloroethene	0/17	0.00	1.88	40.43			O	3.76
Toluene	3/17	17.65	0.97	49.16	0.26	0.35	D	1.94
Trichloroethene	1/17	5.88	1.75	47.60	0.29	0.29	D	3.50
Vinyl acetate	0/1	0.00	5.00				O	10.00
Vinyl chloride	0/17	0.00	1.24	78.54			O	2.48
Xylenes, total	3/17	17.65	1.55	53.94	0.42	0.71	D	3.10
Radionuclides (pCi/L)								
Radium-226	1/1	100.00	0.58		0.58	0.58	X	1.16
Radium-228	1/1	100.00	1.71		1.71	1.71	X	3.42

Note: Footnotes appear on page F-45.

Table F-9. Statistical Analysis of Groundwater Background Data (continued)

[a]Results less than the detection limit were set to one-half the reported detection limit. For radionuclides, the reported result was used to calculate the mean.
Distribution codes:
D = Distribution not determined because fewer than 5 detects or less than 50 percent detects (t-distribution).
L = Distribution most similar to lognormal [land statistic used for upper confidence limit (UCL)].
N = Distribution most similar to normal (t-distribution used for UCL).
O = Analyte not detected in any sample.
X = Distribution significantly different from normal and lognormal (t-distribution used for UCL).
[b]If a chemical was not detected, the reference background criterion was the mean of the detection limit. However, organic constituents were screened against zero because they are considered man-made.

Appendix B

Monitor Well Construction Logs

Figure 4-2 Groundwater Monitoring Well

Well Number G4MW007R Date of Installation April 9, 2007

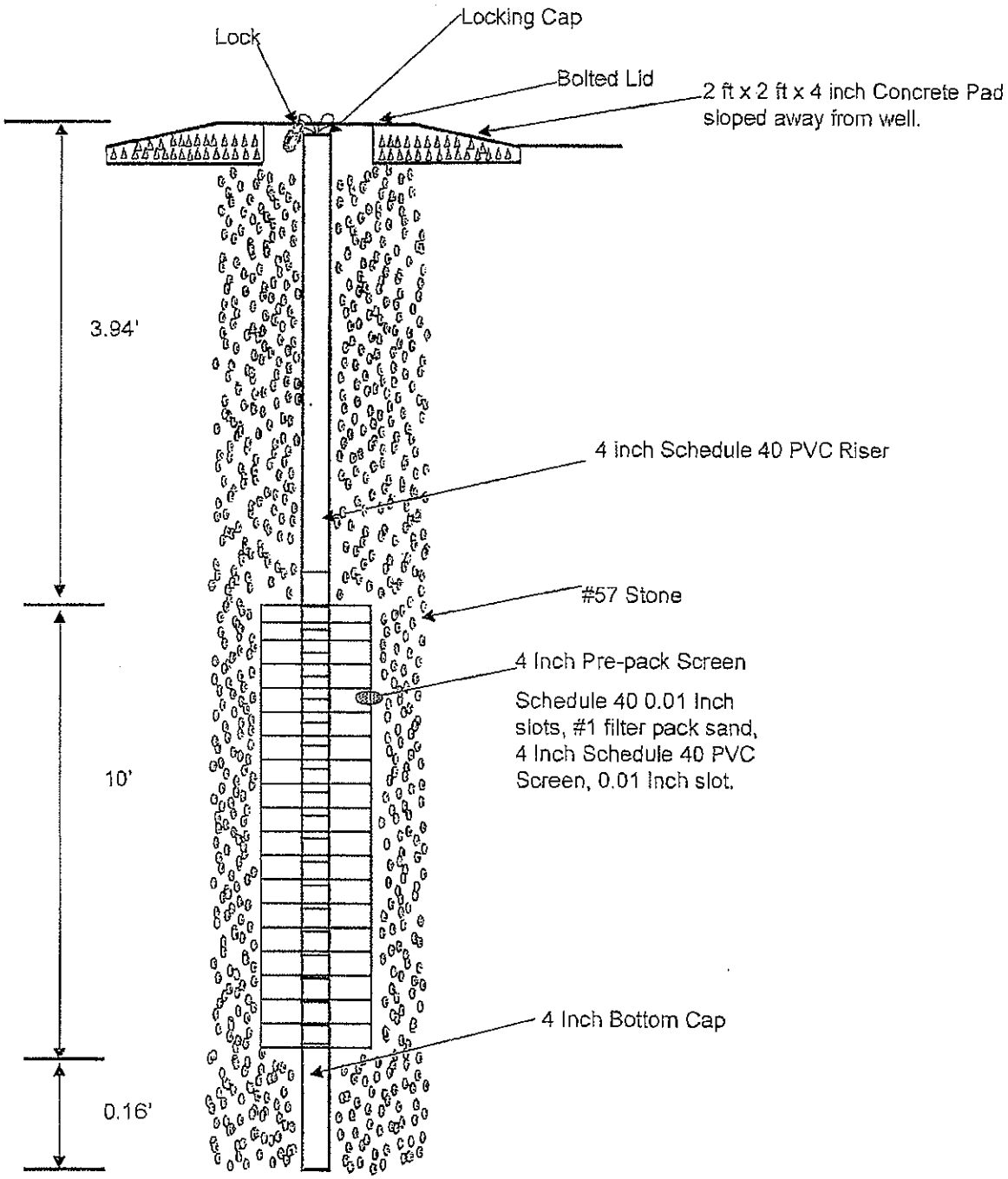

*not to scale

Figure 4-3 Groundwater Monitoring Well

Well Number G4MW013R Date of Installation April 10, 2007

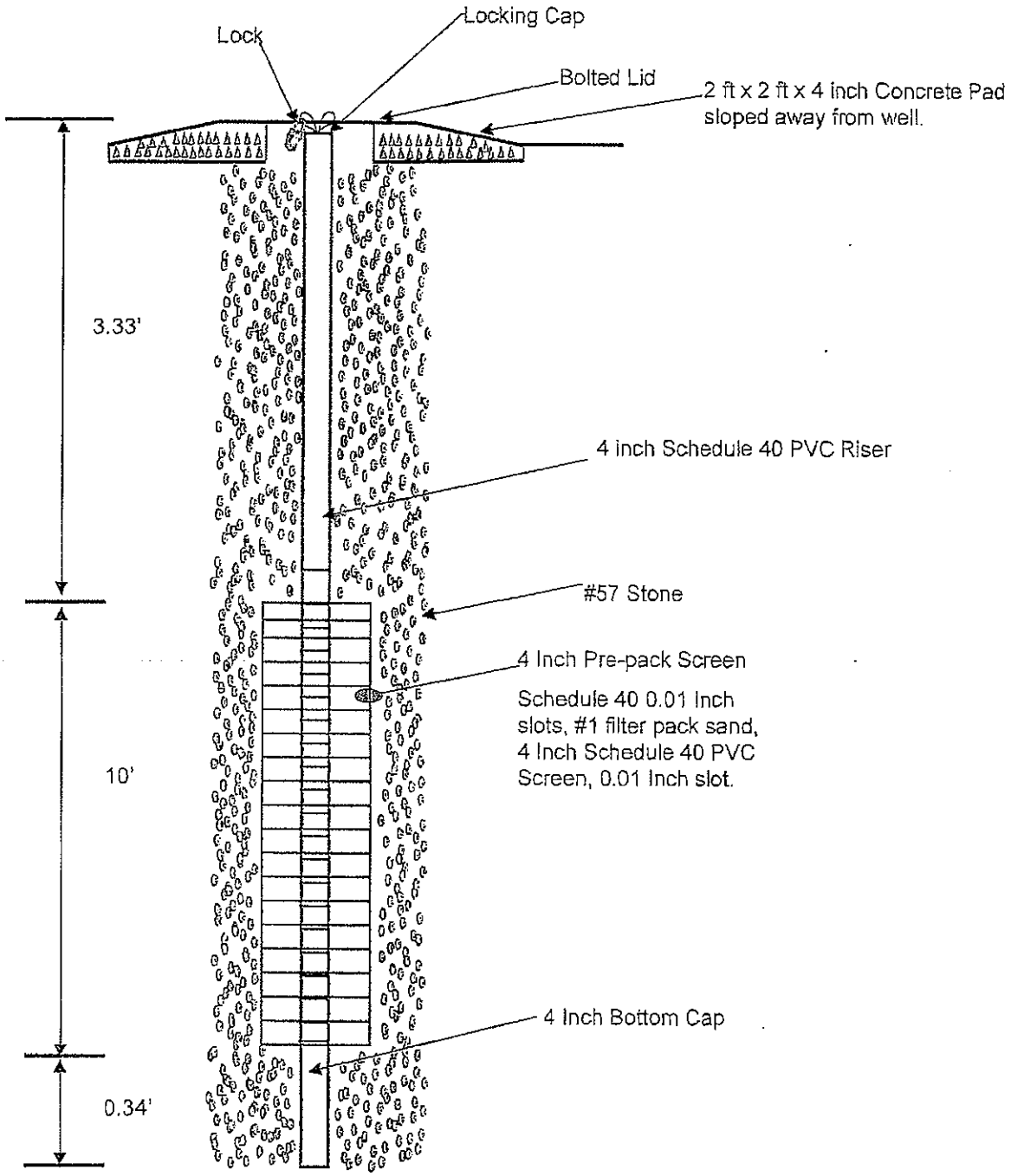

*not to scale

MONITORING WELL CONSTRUCTION LOG - STANDARD FLUSH MOUNT

WELL NO.: G4MW14	INSTALLATION: FORT STEWART GA.	SITE: SWMU 39
PROJECT NO.: 114-113-007	CLIENT/PROJECT: US ARMY CORPS ENG. SAVANNA	
CONTRACTOR: STEP INC.	DRILLING CONTRACTOR: GEOTEK DRILLING CO.	
START - DATE: 4/14/04 TIME: 10:19	END - DATE: 4/14/04 TIME: 10:55	
BUILT BY:	WELL COORDINATES: N E	

Elev
Height
GS Elev
GS Height 0.00'
Elev
Depth BGS

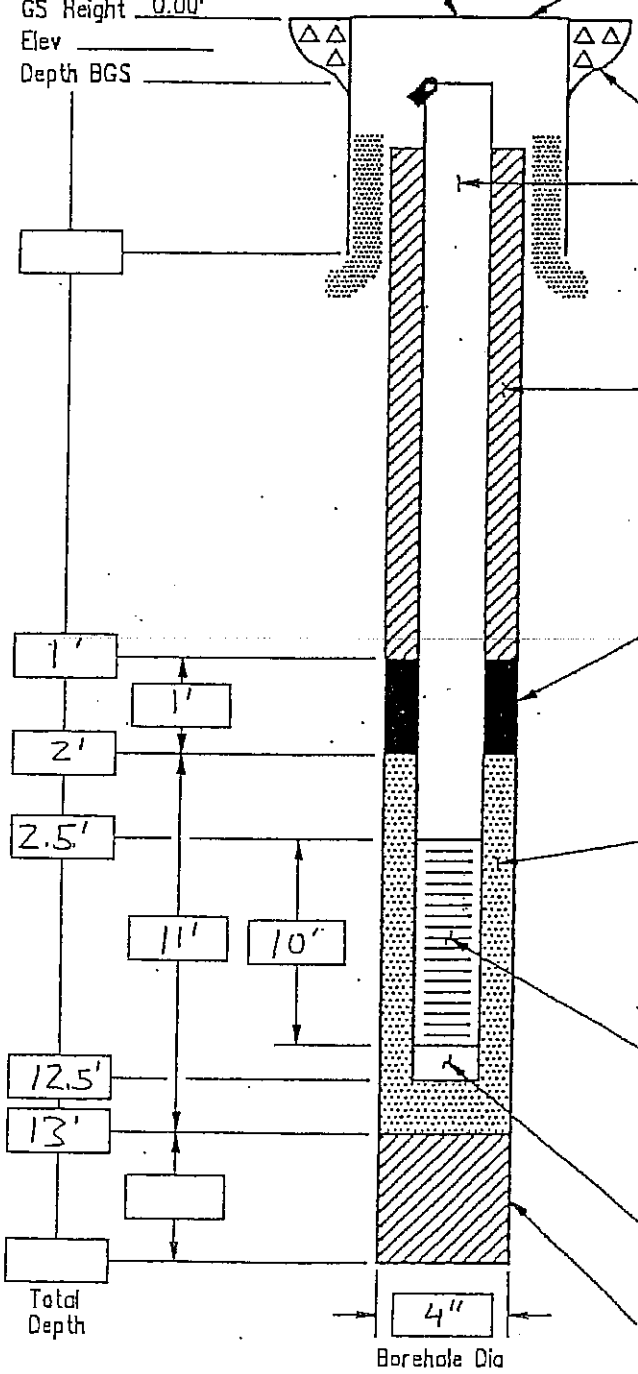

PROTECTIVE CSG
Material / Type FLUSH MOUNT WELL COVER
Diameter
Watertight O-Ring ☐ Yes ☐ No
Breathes with Vadose Zone ☐ Yes ☐ No

SURFACE PAD
Composition & Size CONCRETE 2'X2'

RISER PIPE
Type SCH 40 PVC
Diameter 1"
Total Length (TOC to TOS) 3'
Ventilated Cap ☐ Yes ☐ No
O-Rings For Threads ☐ Yes ☐ No

GROUT
Composition & Amount CONCRETE
Tremied ☐ Yes ☐ No
Interval BGS

CENTRALIZERS ☐ Yes ☑ No
Depth(s)

SEAL
Type BENTONITE
Source
Setup/Hydration Time
Volume Fluid Added
Tremied ☐ Yes ☐ No

FILTER PACK
Type QTZ SAND
Amount Used 1/2 BAG 25 lb
Tremied ☐ Yes ☐ No
Source
Gr Size Dist

SCREEN
Type SCH 40 PVC
Diameter 1"
Slot Size 10-SLOT
Interval BGS 3'-13'

SUMP
Interval BGS 12'5"-12'6"
Type of Bottom Cap PVC

BACKFILL PLUG
Material N.A.
Setup/Hydration Time
Tremied ☐ Yes ☐ No

UCN-18901_FC (4-3-97)

MONITORING WELL CONSTRUCTION LOG - STANDARD FLUSH MOUNT

WELL NO.: G4MW15	INSTALLATION: FORT STEWART GA.	SITE: SWMU 39
PROJECT NO.: 114-113-007	CLIENT/PROJECT: US ARMY CORPS ENG. SAVANNA	
CONTRACTOR: STEP INC.	DRILLING CONTRACTOR: GEOTEK DRILLING CO.	
START - DATE: 4/14/04 TIME: 11:30	END - DATE: 4/14/04 TIME: 11:50	
BUILT BY:	WELL COORDINATES: N E	

Elev
Height
GS Elev
GS Height 0.00'
Elev
Depth BGS

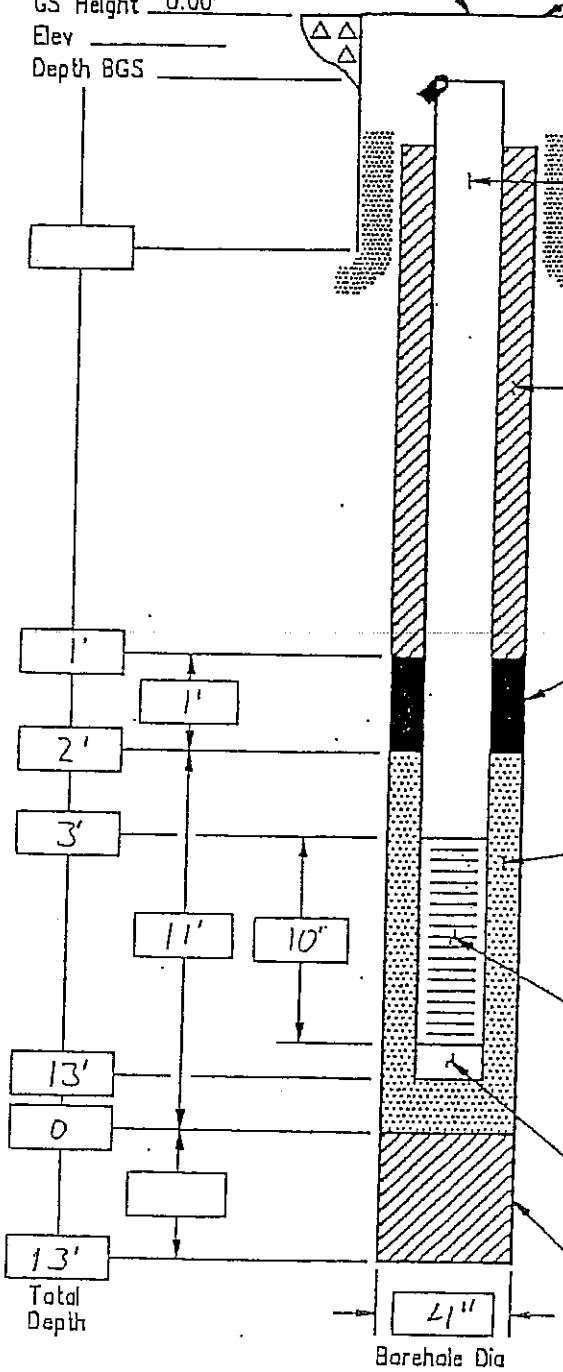

PROTECTIVE CSG
Material/ Type FLUSH MOUNT WELL COVER
Diameter
Watertight O-Ring ☐ Yes ☐ No
Breathes with Vadose Zone ☐ Yes ☐ No

SURFACE PAD
Composition & Size CONCRETE 2'X2'

RISER PIPE
Type SCH 40 PVC
Diameter 1"
Total Length (TOC to TOS) 3'
Ventilated Cap ☐ Yes ☐ No
O-Rings For Threads ☐ Yes ☐ No

GROUT
Composition & Amount CONCRETE
Tremied ☐ Yes ☐ No
Interval BGS

CENTRALIZERS ☐ Yes ☐ No
Depth(s)

SEAL
Type BENTONITE
Source
Setup/Hydration Time
Volume Fluid Added
Tremied ☐ Yes ☐ No

FILTER PACK
Type QTS SAND
Amount Used 1/2 BAG 25 lbs
Tremied ☐ Yes ☐ No
Source
Gr Size Dist

SCREEN
Type SCH 40 PVC
Diameter 1"
Slot Size 10-SLOT
Interval BGS 3'-13'

SUMP
Interval BGS 13'-13'1"
Type of Bottom Cap PVC

BACKFILL PLUG
Material N.A.
Setup/Hydration Time
Tremied ☐ Yes ☐ No

UCN-18901_FC (4-3-97)

MONITORING WELL CONSTRUCTION LOG - STANDARD FLUSH MOUNT

WELL NO.: 64MW16	INSTALLATION: FORT STEWART GA	SITE: SWMU 39
PROJECT NO.: 114-113-007	CLIENT/PROJECT: US ARMY CORPS ENG. SAVANNA	
CONTRACTOR: STEP INC	DRILLING CONTRACTOR: GEOTEK DRILLING CO.	
START - DATE: 4/14/04 TIME: 14:15	END - DATE: 4/14/04 TIME: 14:55	
BUILT BY:	WELL COORDINATES: N E	

Elev
Height
GS Elev
GS Height 0.00'
Elev
Depth BGS

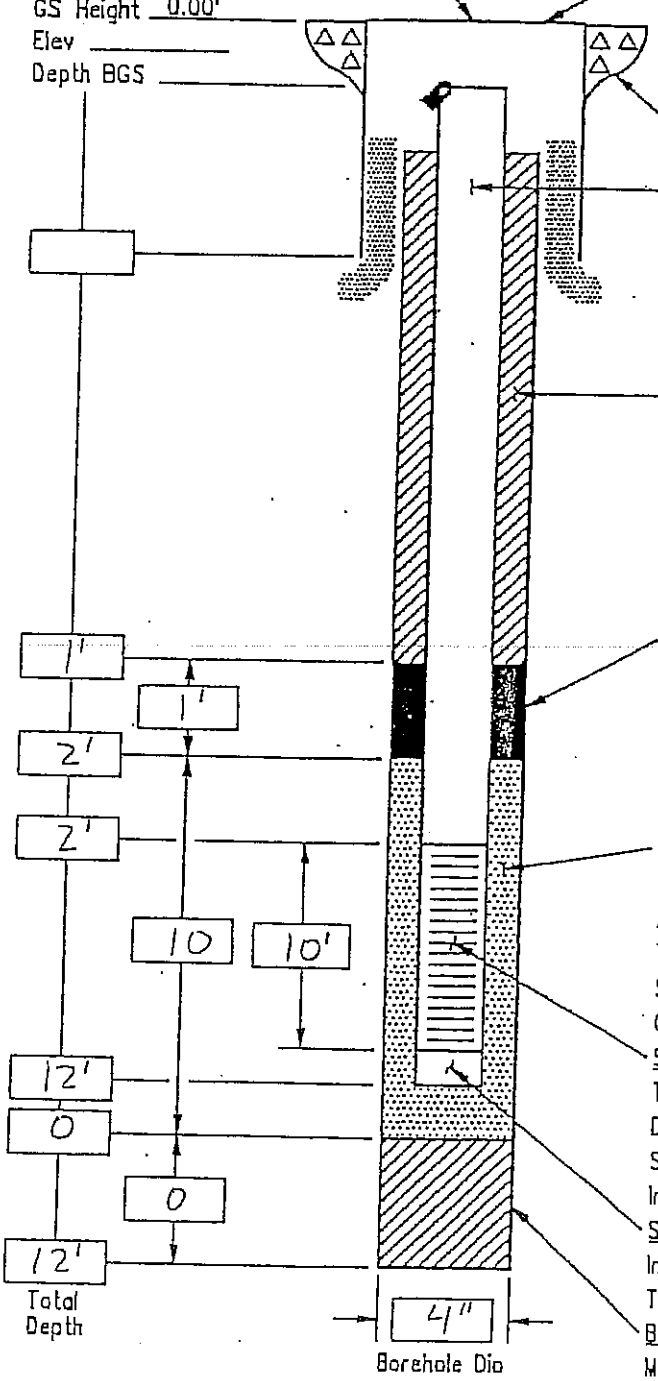

PROTECTIVE CSG
Material / Type FLUSH MOUNT WELL COVER
Diameter
Watertight O-Ring ☐ Yes ☐ No
Breathes with Vadose Zone ☐ Yes ☐ No

SURFACE PAD
Composition & Size CONCRETE 2'x2'

RISER PIPE
Type SCH 40 PVC
Diameter 1"
Total Length (TOC to TOS) 2'
Ventilated Cap ☐ Yes ☐ No
O-Rings For Threads ☐ Yes ☐ No

GROUT
Composition & Amount CONCRETE
Tremied ☐ Yes ☐ No
Interval BGS

CENTRALIZERS ☐ Yes ☐ No
Depth(s)

SEAL
Type BENTONITE
Source
Setup/Hydration Time
Volume Fluid Added
Tremied ☐ Yes ☐ No

FILTER PACK
Type QTS SAND
Amount Used 1/2 BAG 25 lbs
Tremied ☐ Yes ☐ No
Source
Gr Size Dist 20/40

SCREEN
Type SCH 40 PVC
Diameter 1"
Slot Size 10-SLOT
Interval BGS

SUMP
Interval BGS 11'11"- 12'
Type of Bottom Cap PVC

BACKFILL PLUG
Material N.A.
Setup/Hydration Time
Tremied ☐ Yes ☐ No

UCN-18901_FC (4-3-97)

MONITORING WELL CONSTRUCTION LOG - STANDARD FLUSH MOUNT

WELL NO.: 64MW17	INSTALLATION: FORT STEWART GA	SITE: SWMU 39
PROJECT NO.: 114-113-007	CLIENT/PROJECT: US ARMY CORPS ENG. SAVANNA	
CONTRACTOR: STEP INC.	DRILLING CONTRACTOR: GEOTEK DRILLING CO.	
START - DATE: 4/14/04 TIME: 15:14	END - DATE: 4/14/04 TIME: 15:45	
BUILT BY:	WELL COORDINATES: N E	

Elev
Height
GS Elev
GS Height 0.00'
Elev
Depth BGS

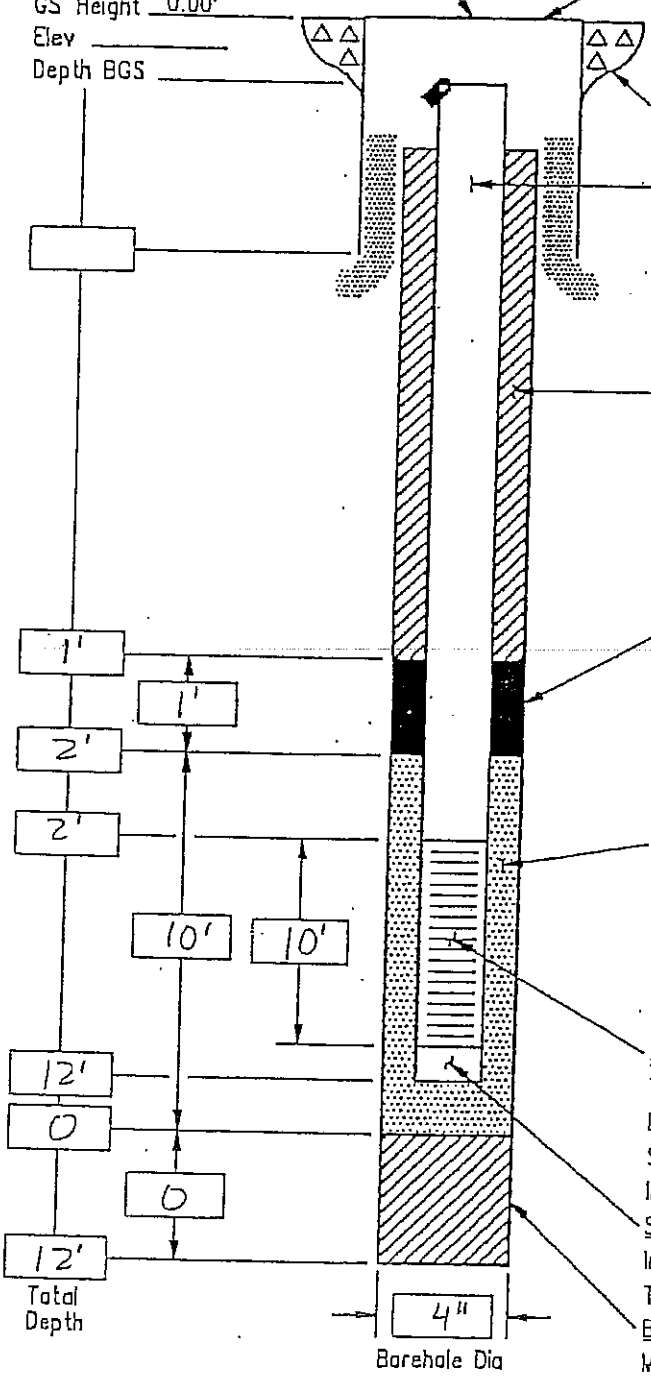

PROTECTIVE CSG
Material / Type FLUSH MOUNT WELL COVER
Diameter
Watertight O-Ring ☐ Yes ☐ No
Breathes with Vadose Zone ☐ Yes ☐ No

SURFACE PAD
Composition & Size CONCRETE 2'x2'

RISER PIPE
Type SCH 40 PVC
Diameter 1"
Total Length (TOC to TOS) 3'
Ventilated Cap ☐ Yes ☐ No
O-Rings For Threads ☐ Yes ☐ No

GROUT
Composition & Amount CONCRETE
Tremied ☐ Yes ☐ No
Interval BGS
CENTRALIZERS ☐ Yes ☐ No
Depth(s)

SEAL
Type BENTONITE
Source
Setup/Hydration Time
Volume Fluid Added
Tremied ☐ Yes ☐ No

FILTER PACK
Type QTS SAND
Amount Used 1/2 BAG 25 lbs.
Tremied ☐ Yes ☐ No
Source
Gr Size Dist 20/40

SCREEN
Type SCH 40 PVC
Diameter 1"
Slot Size 10-SLOT
Interval BGS

SUMP
Interval BGS
Type of Bottom Cap PVC

BACKFILL PLUG
Material NA.
Setup/Hydration Time
Tremied ☐ Yes ☐ No

UCN-18901_FC (4-3-97)

MONITORING WELL CONSTRUCTION LOG - STANDARD FLUSH MOUNT

WELL NO.: G4MW18	INSTALLATION: FORT STEWART GA.	SITE: SWMU 39
PROJECT NO.: 114-113-007	CLIENT/PROJECT: US ARMY CORPS ENG. SAVANNA	
CONTRACTOR: STEP INC.	DRILLING CONTRACTOR: GEOTEK DRILLING CO.	
START - DATE: 4/15/04 TIME: 8:15	END - DATE: 4/15/04 TIME: 12:30	
BUILT BY:	WELL COORDINATES: N E	

Elev _____
Height _____
GS Elev _____
GS Height 0.00'
Elev _____
Depth BGS _____

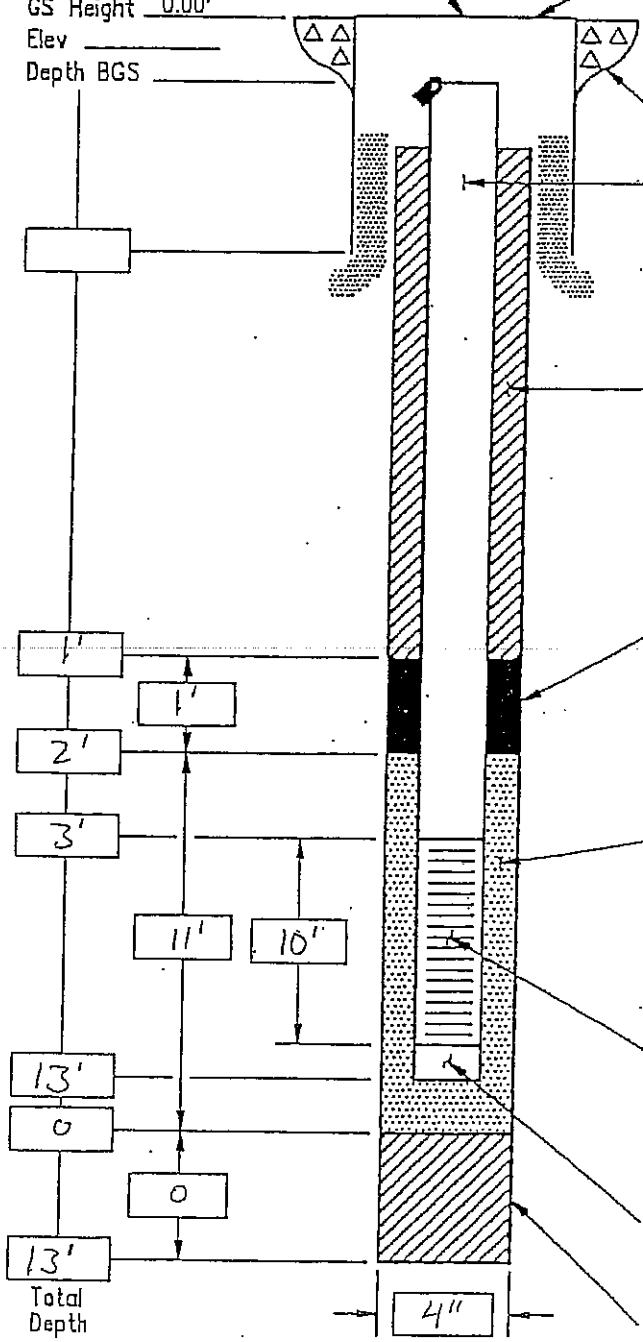

PROTECTIVE CSG
Material / Type FLUSH MOUNT WELL COVER
Diameter _____
Watertight O-Ring ☐ Yes ☐ No
Breathes with Vadose Zone ☐ Yes ☐ No

SURFACE PAD
Composition & Size CONCRETE 2'X2'

RISER PIPE
Type SCH 40 PVC
Diameter 1"
Total Length (TOC to TOS) 3'
Ventilated Cap ☐ Yes ☐ No
O-Rings For Threads ☐ Yes ☐ No

GROUT
Composition & Amount CONCRETE
Tremied ☐ Yes ☐ No
Interval BGS _____

CENTRALIZERS ☐ Yes ☐ No
Depth(s) _____

SEAL
Type BENTONITE
Source _____
Setup/Hydration Time _____
Volume Fluid Added _____
Tremied ☐ Yes ☐ No

FILTER PACK
Type QTS SAND
Amount Used 1/2 BAG 25 lbs
Tremied ☐ Yes ☐ No
Source _____
Gr Size Dist 20/40

SCREEN
Type SCH 40 PVC
Diameter 1"
Slot Size 10-SLOT
Interval BGS 3'-13'

SUMP
Interval BGS 12'11"-13'
Type of Bottom Cap _____

BACKFILL PLUG
Material N.A.
Setup/Hydration Time _____
Tremied ☐ Yes ☐ No

UCN-18901_FC (4-3-97)

MONITORING WELL CONSTRUCTION LOG - STANDARD FLUSH MOUNT

WELL NO.: 64MW19	INSTALLATION: FORT STEWART GA	SITE: SWMU 39
PROJECT NO.: 114-113-007	CLIENT/PROJECT: US ARMY CORPS ENG. SAVANNA	
CONTRACTOR: STEP INC.	DRILLING CONTRACTOR: GEOTEK DRILLING CO.	
START - DATE: 4/15/04 TIME: 12:30	END - DATE: 4/15/04 TIME: 14:45	
BUILT BY:	WELL COORDINATES: N E	

Elev
Height
GS Elev
GS Height 0.00'
Elev
Depth BGS

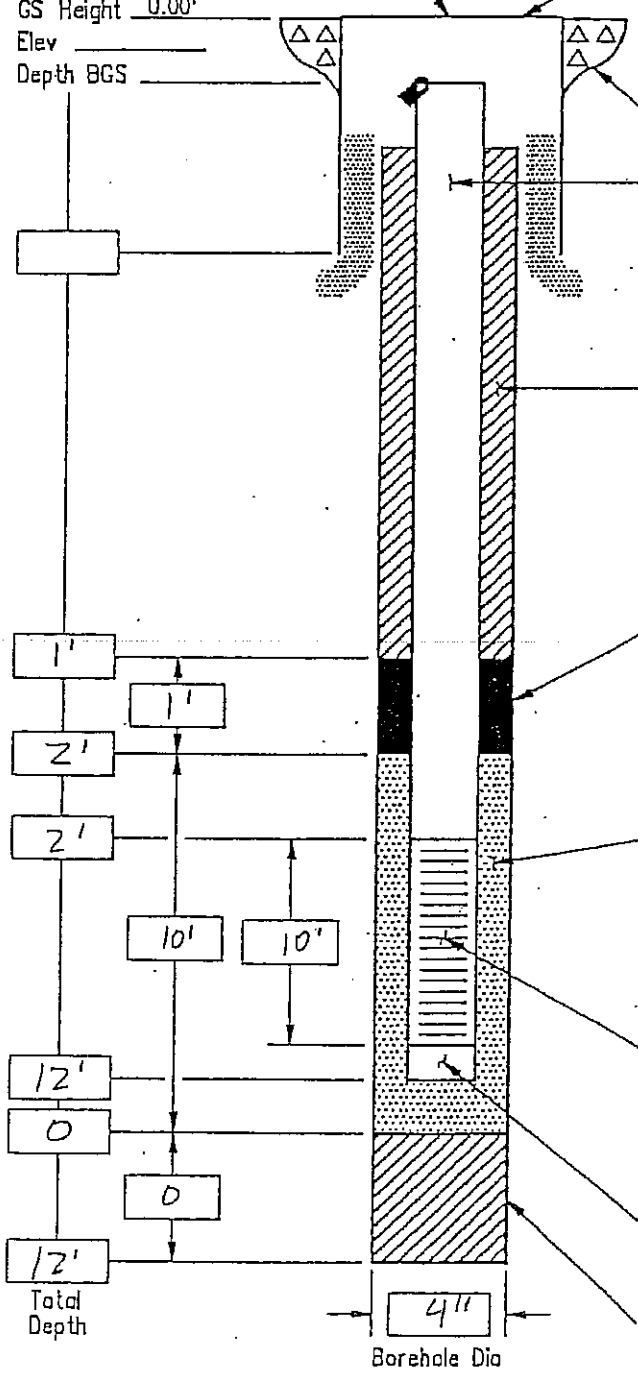

PROTECTIVE CSG
Material / Type FLUSH MOUNT WELL COVER
Diameter
Watertight O-Ring ☐ Yes ☐ No
Breathes with Vadose Zone ☐ Yes ☐ No

SURFACE PAD
Composition & Size CONCRETE 2'X2'

RISER PIPE
Type SCH 40 PVC
Diameter 1"
Total Length (TOC to TOS) 3'
Ventilated Cap ☐ Yes ☐ No
O-Rings For Threads ☐ Yes ☐ No

GROUT
Composition & Amount CONCRETE
Tremied ☐ Yes ☐ No
Interval BGS
CENTRALIZERS ☐ Yes ☐ No
Depth(s)

SEAL
Type BENTONITE
Source
Setup/Hydration Time
Volume Fluid Added
Tremied ☐ Yes ☐ No

FILTER PACK
Type QTZ SAND
Amount Used 1/2 BAG 25 lbs
Tremied ☐ Yes ☐ No
Source
Gr Size Dist 20/40

SCREEN
Type SCH 40 PVC
Diameter 1"
Slot Size 10-SLOT
Interval BGS 2'-12'

SUMP
Interval BGS 11' 11"- 12'
Type of Bottom Cap PVC

BACKFILL PLUG
Material
Setup/Hydration Time
Tremied ☐ Yes ☐ No

UCN-18901_FC (4-3-97)

MONITORING WELL CONSTRUCTION LOG - STANDARD FLUSH MOUNT

WELL NO.: 64MW20	INSTALLATION: FORT STEWART GA	SITE: SWMU 39
PROJECT NO.: 114-113-007	CLIENT/PROJECT: US ARMY CORPS OF ENG. SAVANNA	
CONTRACTOR: STEP INC.	DRILLING CONTRACTOR: GEOTEK DRILLING	
START - DATE: 4/15/04 TIME: 14:45	END - DATE: 4/15/04 TIME: 15:00	
BUILT BY:	WELL COORDINATES: N E	

Elev
Height
GS Elev
GS Height 0.00'
Elev
Depth BGS

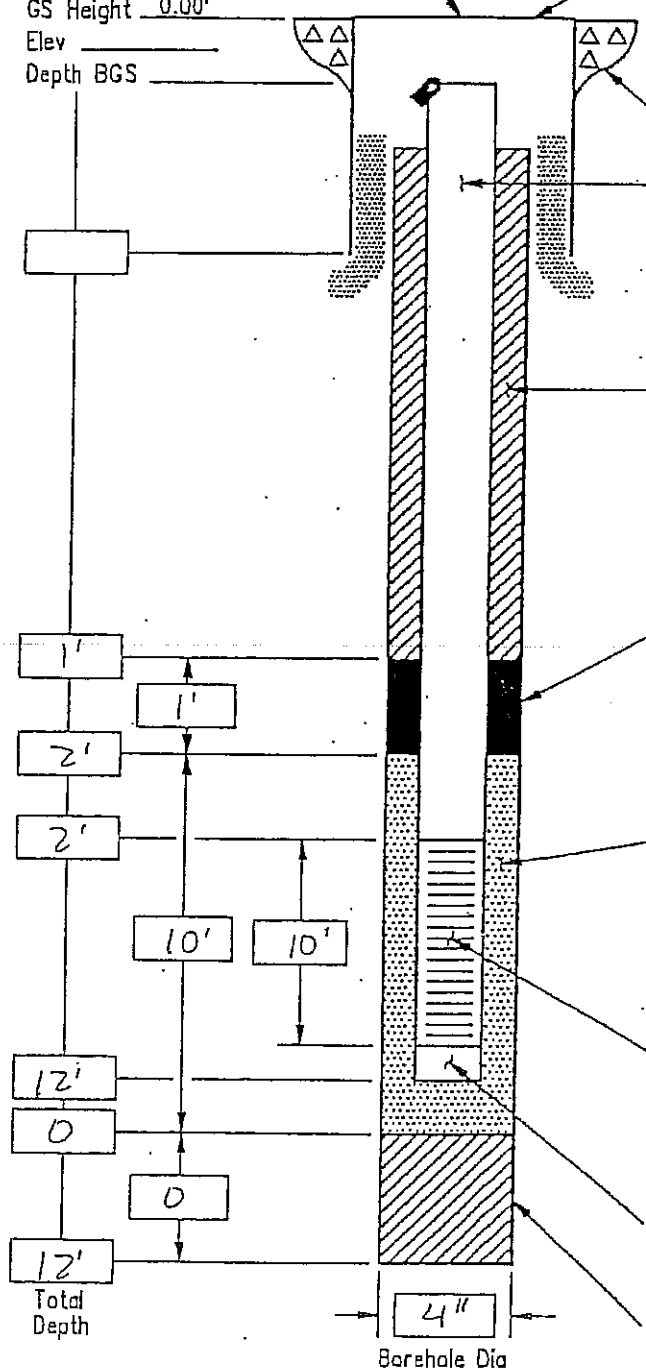

PROTECTIVE CSG
Material / Type FLUSH MOUNT WELL COVER
Diameter
Watertight O-Ring ☐ Yes ☐ No
Breathes with Vadose Zone ☐ Yes ☐ No

SURFACE PAD
Composition & Size CONCRETE 2'x2'

RISER PIPE
Type SCH 40 PVC
Diameter 1"
Total Length (TOC to TOS) 3'
Ventilated Cap ☐ Yes ☐ No
O-Rings For Threads ☐ Yes ☐ No

GROUT
Composition & Amount CONCRETE
Tremied ☐ Yes ☐ No
Interval BGS

CENTRALIZERS ☐ Yes ☐ No
Depth(s)

SEAL
Type BENTONITE
Source
Setup/Hydration Time
Volume Fluid Added
Tremied ☐ Yes ☐ No

FILTER PACK
Type QTZ SAND
Amount Used 1/2 BAG 25 lbs
Tremied ☐ Yes ☐ No
Source
Gr Size Dist 20/40

SCREEN
Type SCH 40 PVC
Diameter 1"
Slot Size 10-SLOT
Interval BGS 2'-12'

SUMP
Interval BGS 11' 11"-12'
Type of Bottom Cap PVC

BACKFILL PLUG
Material N.A.
Setup/Hydration Time
Tremied ☐ Yes ☐ No

UCN-18901_FC (4-3-97)

MONITORING WELL CONSTRUCTION LOG - STANDARD FLUSH MOUNT

WELL NO.: 64MW21	INSTALLATION: FORT STEWART GA.	SITE: SWMU 39
PROJECT NO.: 1121-113-007	CLIENT/PROJECT: U.S. ARMY CORPS ENG. SAVANNA	
CONTRACTOR: STEP INC	DRILLING CONTRACTOR: GEOTEK DRILLING CO	
START - DATE: 4/15/04 TIME: 15:34	END - DATE: 4/15/04 TIME: 16:00	
BUILT BY:	WELL COORDINATES: N E	

Elev _____ 0
Height _____
GS Elev _____
GS Height 0.00'
Elev _____
Depth BGS _____

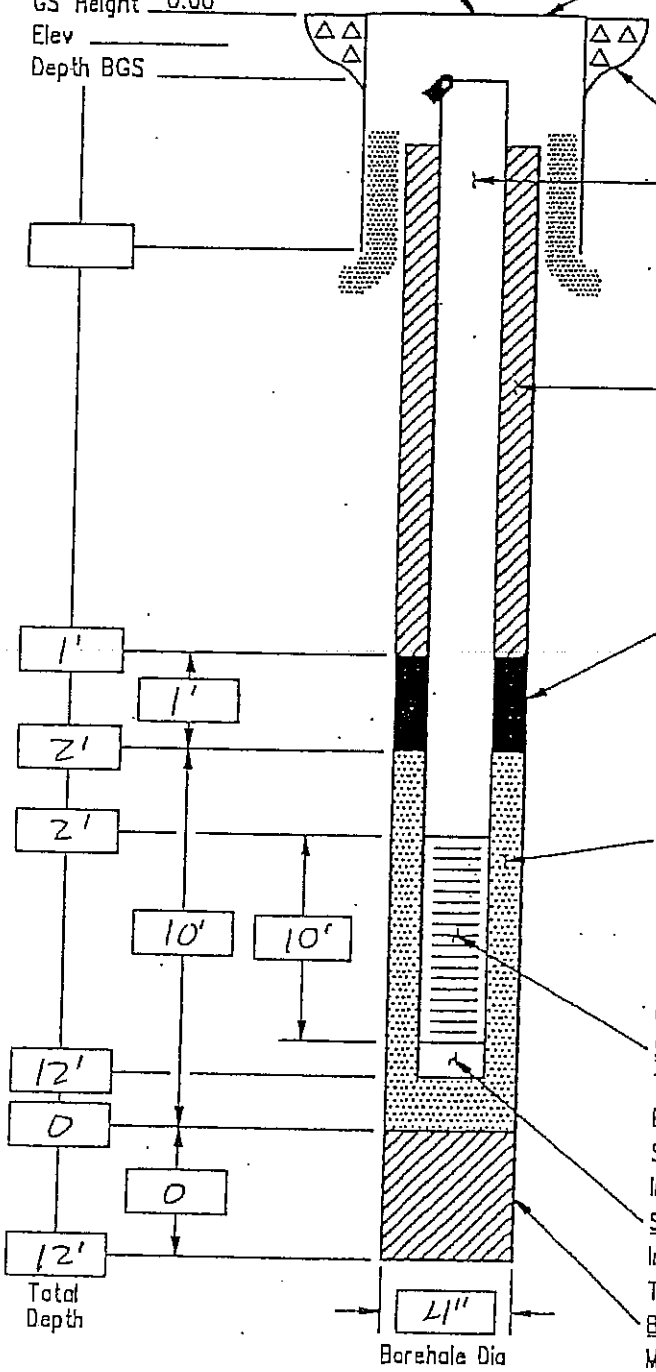

PROTECTIVE CSG
Material / Type: FLUSH MOUNT Well Cover
Diameter: _____
Watertight O-Ring: ☐ Yes ☐ No
Breathes with Vadose Zone: ☐ Yes ☐ No

SURFACE PAD
Composition & Size: CONCRETE 2'x2'

RISER PIPE
Type: SCH 40 PVC
Diameter: 1"
Total Length (TOC to TOS): 3'
Ventilated Cap: ☐ Yes ☐ No
O-Rings For Threads: ☐ Yes ☐ No

GROUT
Composition & Amount: CONCRETE
Tremied: ☐ Yes ☐ No
Interval BGS: _____

CENTRALIZERS ☐ Yes ☐ No
Depth(s): _____

SEAL
Type: BENTONITE
Source: _____
Setup/Hydration Time: _____
Volume Fluid Added: _____
Tremied: ☐ Yes ☐ No

FILTER PACK
Type: QTZ SAND
Amount Used: 1/2 BAG 25 lbs.
Tremied: ☐ Yes ☐ No
Source: _____
Gr Size Dist: 20/40

SCREEN
Type: SCH 40 PVC
Diameter: 1"
Slot Size: 10-SLOT
Interval BGS: 2'-12'

SUMP
Interval BGS: 11' 11"-12'
Type of Bottom Cap: PLU

BACKFILL PLUG
Material: N.A.
Setup/Hydration Time: _____
Tremied: ☐ Yes ☐ No

UCN-18901_FC (4-3-97)

MONITORING WELL CONSTRUCTION LOG - STANDARD

WELL NO.: 64MW022	INSTALLATION: FORT STEWART GA	SITE: SWMU 39
PROJECT NO.: 114-113-007	CLIENT/PROJECT: US ARMY CORPS ENG. SAVANNA	
CONTRACTOR: STEP INC	DRILLING CONTRACTOR:	
START - DATE: 8/28/04 TIME: 12:15	END - DATE: 8/28/04 TIME: 14:20	
BUILT BY:	WELL COORDINATES: N E	

Elev
Height
Elev
Height
GS Elev
GS Height 0.00'
Depth BGS

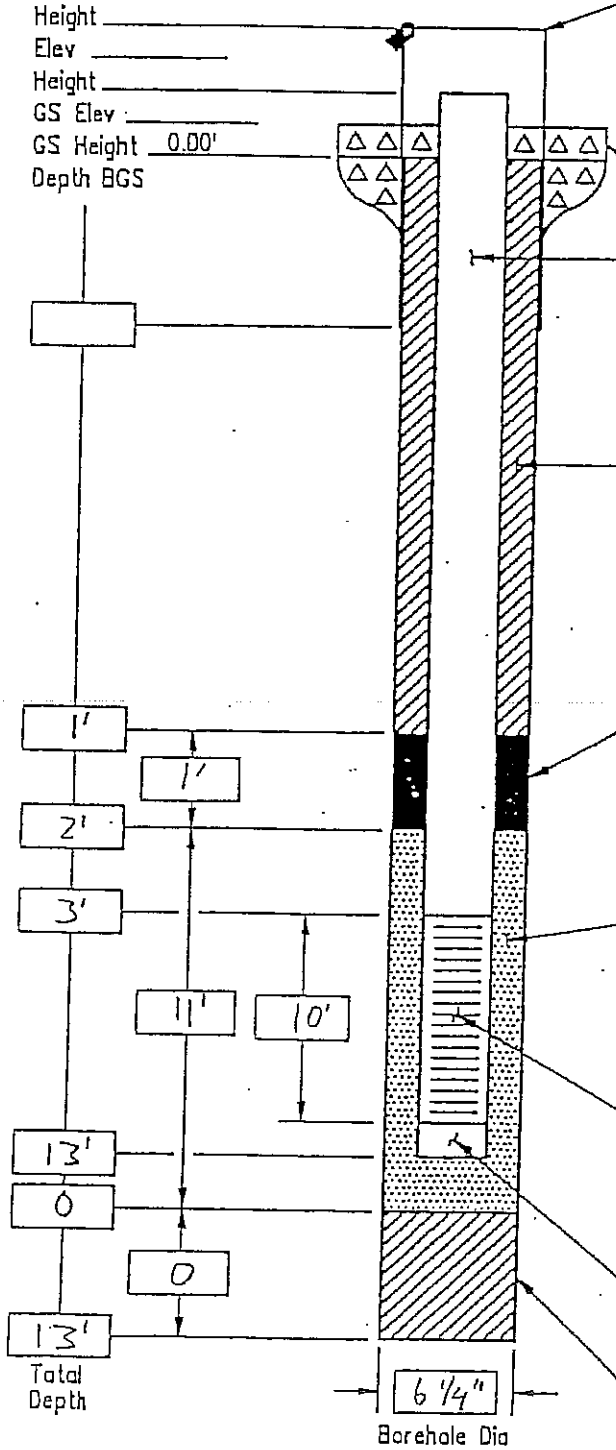

Total Depth

Borehole Dia

PROTECTIVE CSG
Material / Type
Diameter
Weep Hole ☐ Yes ☐ No
GUARD POSTS ☐ Yes ☐ No
No. Type
SURFACE PAD
Composition & Size CONCRETE 2'X2'
RISER PIPE
Type SCH 40 PVC
Diameter 2"
Total Length (TOC to TOS) 3'
Ventilated Cap ☐ Yes ☐ No
O-Rings For Threads ☐ Yes ☐ No
GROUT
Composition & Amount CONCRETE
Tremied ☐ Yes ☐ No
Interval BGS
CENTRALIZERS ☐ Yes ☐ No
Depth(s)
SEAL
Type BENTONITE
Source
Setup/Hydration Time
Volume Fluid Added
Tremied ☐ Yes ☐ No
FILTER PACK
Type QTZ SAND
Amount Used 3 BAGS
Tremied ☐ Yes ☐ No
Source
Gr Size Dist
SCREEN
Type SCH 40 PVC
Diameter 2"
Slot Size 10-SLOT
Interval BGS 3'-13'
SUMP
Interval BGS
Type of Bottom Cap
BACKFILL PLUG
Material
Setup/Hydration Time
Tremied ☐ Yes ☐ No

UCN-18900_FC (4-3-87)

MONITORING WELL CONSTRUCTION LOG - STANDARD

WELL NO.: 64MW023	INSTALLATION: FORT STEWART GA.	SITE: SWMU 39
PROJECT NO.: 114-113-007	CLIENT/PROJECT: US ARMY CORPS ENG SAVANNA	
CONTRACTOR: STEP INC	DRILLING CONTRACTOR:	
START - DATE: 8/27/04 TIME: 07:00	END - DATE: 8/27/04 TIME: 08:30	
BUILT BY:	WELL COORDINATES: N	E

Elev
Height
Elev
Height
GS Elev
GS Height 0.00'
Depth BGS

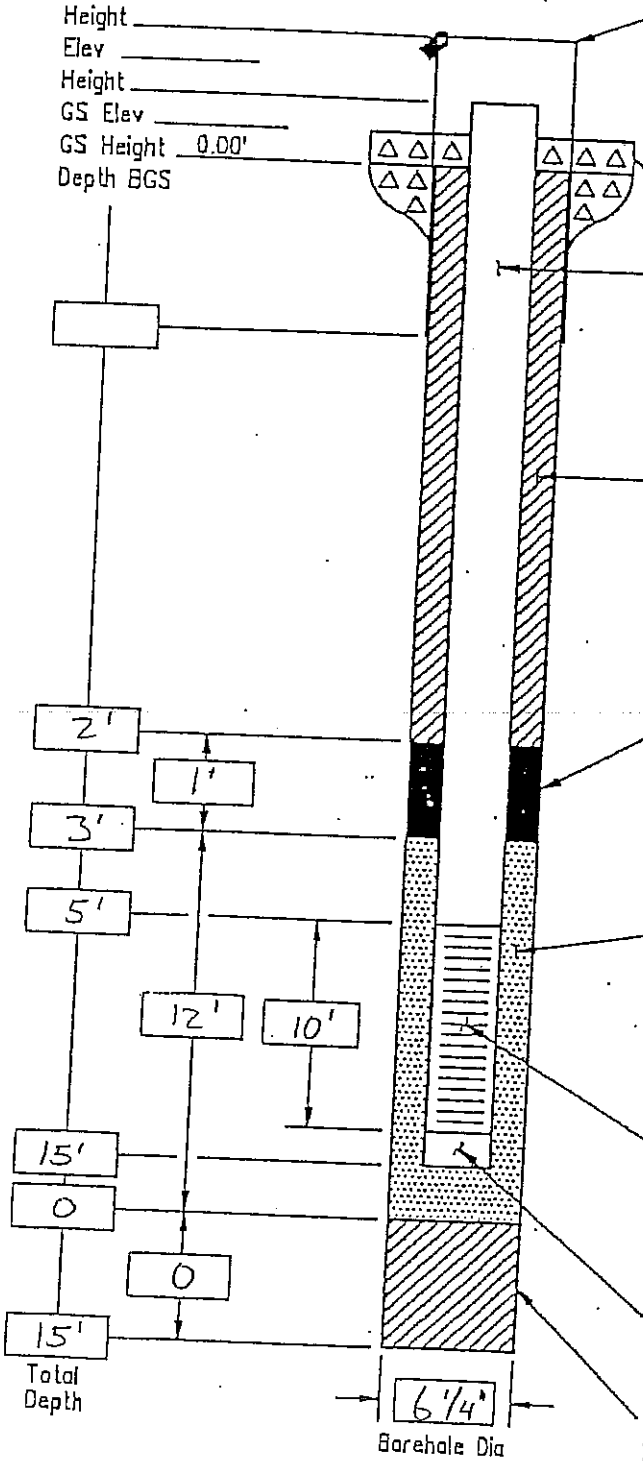

PROTECTIVE CSG
Material / Type
Diameter
Weep Hole ☐ Yes ☐ No
GUARD POSTS ☐ Yes ☐ No
No. Type
SURFACE PAD
Composition & Size CONCRETE 2'x2'
RISER PIPE
Type SCH 40 PVC
Diameter 2"
Total Length (TOC to TOS) 3'
Ventilated Cap ☐ Yes ☐ No
O-Rings For Threads ☐ Yes ☐ No
GROUT
Composition & Amount CONCRETE
Tremied ☐ Yes ☐ No
Interval BGS
CENTRALIZERS ☐ Yes ☐ No
Depth(s)
SEAL
Type BENTONITE
Source
Setup/Hydration Time
Volume Fluid Added
Tremied ☐ Yes ☐ No
FILTER PACK
Type QTZ SAND
Amount Used
Tremied ☐ Yes ☐ No
Source
Gr Size Dist
SCREEN
Type SCH 40 PVC
Diameter 2"
Slot Size 10-SLOT
Interval BGS 5'-15'
SUMP
Interval BGS
Type of Bottom Cap
BACKFILL PLUG
Material
Setup/Hydration Time
Tremied ☐ Yes ☐ No

UCN-18900_FC (4-3-97)

MONITORING WELL CONSTRUCTION LOG - STANDARD FLUSH MOUNT

WELL NO.: 64MW024	INSTALLATION: FORT STEWART GA.	SITE: SWMU 39
PROJECT NO.: 114-113-007	CLIENT/PROJECT: US ARMY CORPS ENG SAVANNAH	
CONTRACTOR: STEP INC	DRILLING CONTRACTOR:	
START - DATE: 8/27/04 TIME: 11:00	END - DATE: 8/27/04 TIME: 12:00	
BUILT BY:	WELL COORDINATES: N E	

Elev
Height
GS Elev
GS Height 0.00'
Elev
Depth BGS

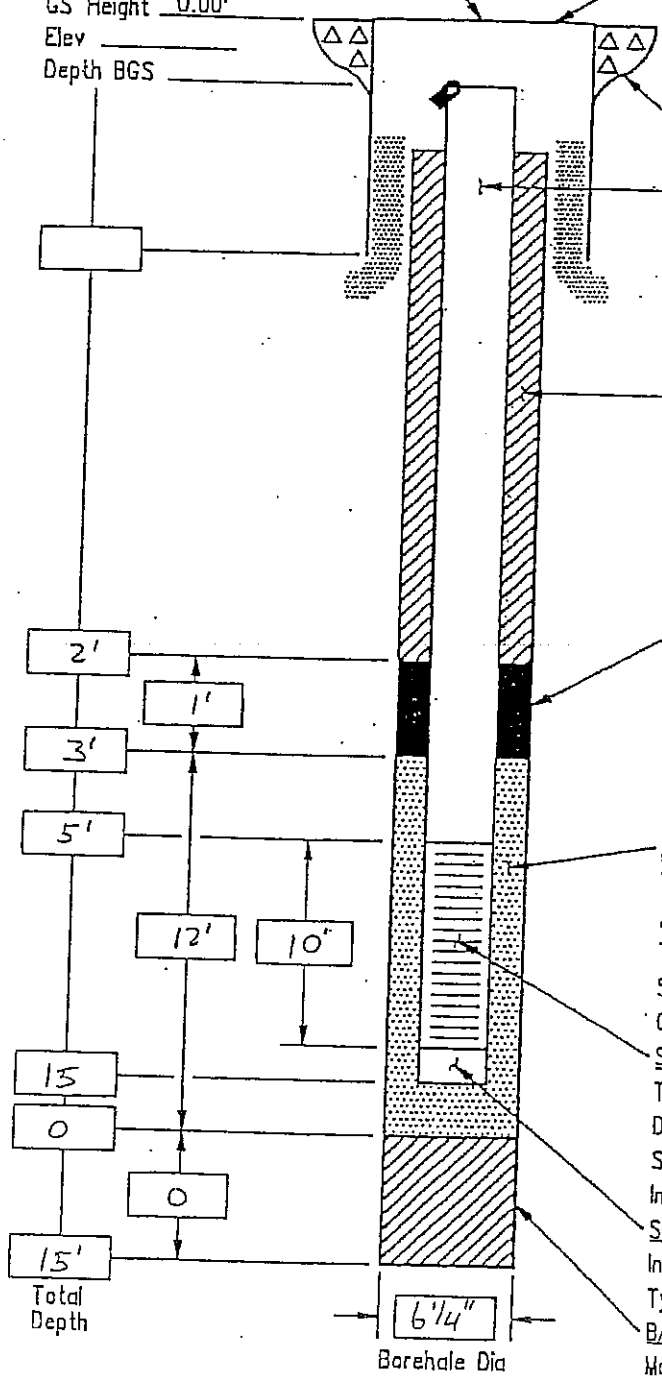

PROTECTIVE CSG
Material / Type
Diameter
Watertight O-Ring ☐ Yes ☐ No
Breathes with Vadose Zone ☐ Yes ☐ No

SURFACE PAD
Composition & Size

RISER PIPE
Type SCH 40 PVC
Diameter 2"
Total Length (TOC to TOS) 3'
Ventilated Cap ☐ Yes ☐ No
O-Rings For Threads ☐ Yes ☐ No

GROUT
Composition & Amount CONCRETE
Tremied ☐ Yes ☐ No
Interval BGS

CENTRALIZERS ☐ Yes ☐ No
Depth(s)

SEAL
Type BENTONITE
Source
Setup/Hydration Time
Volume Fluid Added
Tremied ☐ Yes ☐ No

FILTER PACK
Type QTZ SAND
Amount Used
Tremied ☐ Yes ☐ No
Source
Gr Size Dist

SCREEN
Type SCH 40 PVC
Diameter 2"
Slot Size 10-SLOT
Interval BGS 5'-15'

SUMP
Interval BGS
Type of Bottom Cap

BACKFILL PLUG
Material N.A.
Setup/Hydration Time
Tremied ☐ Yes ☐ No

UCN-18901_FC (4-3-97)

MONITORING WELL CONSTRUCTION LOG - STANDARD FLUSH MOUNT

WELL NO.: 64MW025	INSTALLATION: FORT STEWART GA.	SITE: SWMU 39
PROJECT NO.: 114-113-007	CLIENT/PROJECT: US ARMY CORPS ENG SAVANNAH	
CONTRACTOR: STEP INC	DRILLING CONTRACTOR:	
START - DATE: 8/27/04 TIME: 13:40	END - DATE: 8/27/04 TIME: 14:20	
BUILT BY:	WELL COORDINATES: N E	

Elev
Height
GS Elev
GS Height 0.00'
Elev
Depth BGS

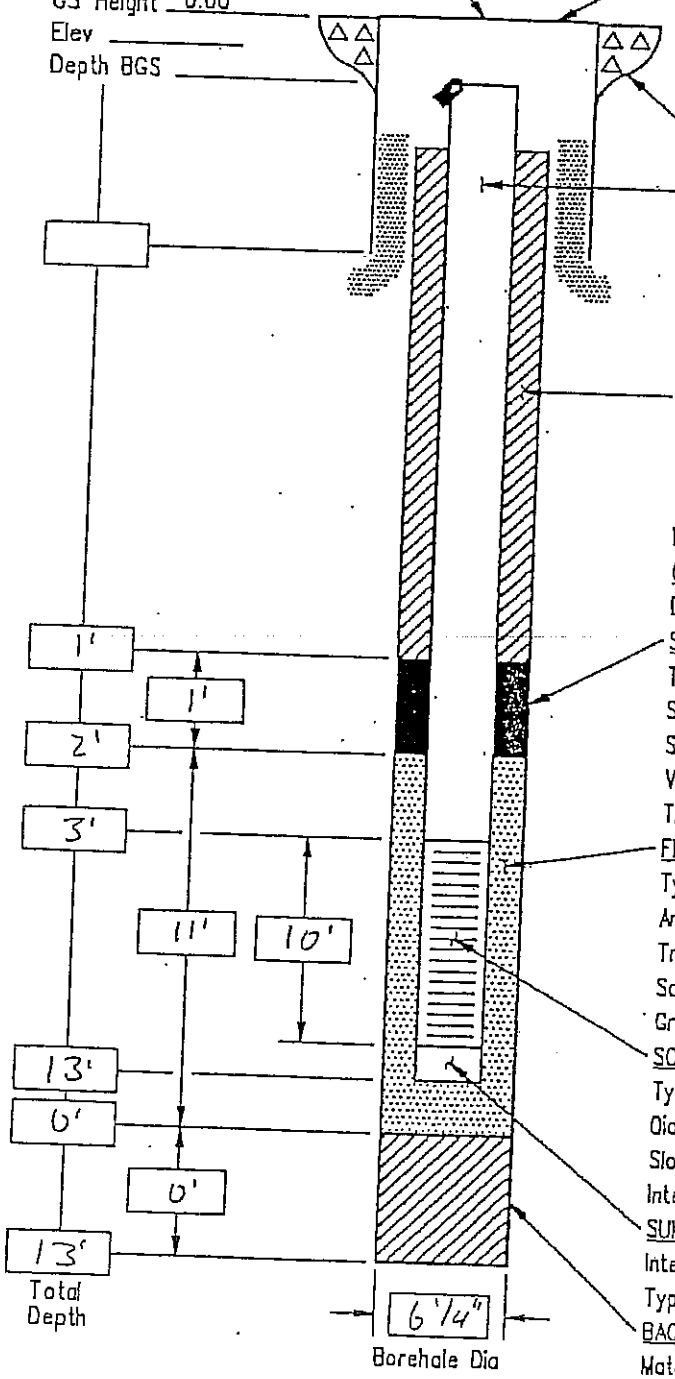

PROTECTIVE CSG
Material / Type
Diameter
Watertight O-Ring ☐ Yes ☐ No
Breathes with Vadose Zone ☐ Yes ☐ No

SURFACE PAD
Composition & Size CONCRETE 2'x2'

RISER PIPE
Type SCH 40 PVC
Diameter 2"
Total Length (TOC to TOS) 3'
Ventilated Cap ☐ Yes ☐ No
O-Rings For Threads ☐ Yes ☐ No

GROUT
Composition & Amount CONCRETE
Tremied ☐ Yes ☐ No
Interval BGS

CENTRALIZERS ☐ Yes ☐ No
Depth(s)

SEAL
Type BENTONITE
Source
Setup/Hydration Time
Volume Fluid Added
Tremied ☐ Yes ☐ No

FILTER PACK
Type QTZ SAND
Amount Used
Tremied ☐ Yes ☐ No
Source
Gr Size Dist

SCREEN
Type SCH 40 PVC
Diameter 2"
Slot Size 10-SLOT
Interval BGS 3'-13'

SUMP
Interval BGS
Type of Bottom Cap

BACKFILL PLUG
Material N.A.
Setup/Hydration Time
Tremied ☐ Yes ☐ No

UCN-18901_FC (4-3-97)

MONITORING WELL CONSTRUCTION LOG - Standard Flush Mount

Well No.: G4 MW - 026	Installation: Fort Stewart	Site: SWMU 39
Project No.: E0138.0002	Client/Project: USACE	
Contractor: SpecPro Environmental Services, .LLC	Drilling Contractor: Boart Longyear	
Start Date: 3/25/2008	End Date 3/27/2008	Time: 945
Built By: Steven Gautney	Well Coordinates: N:	E:

Elev.
Height 0 ft
GS Elev.
GS Height
Elev.
Depth BGS 0 ft

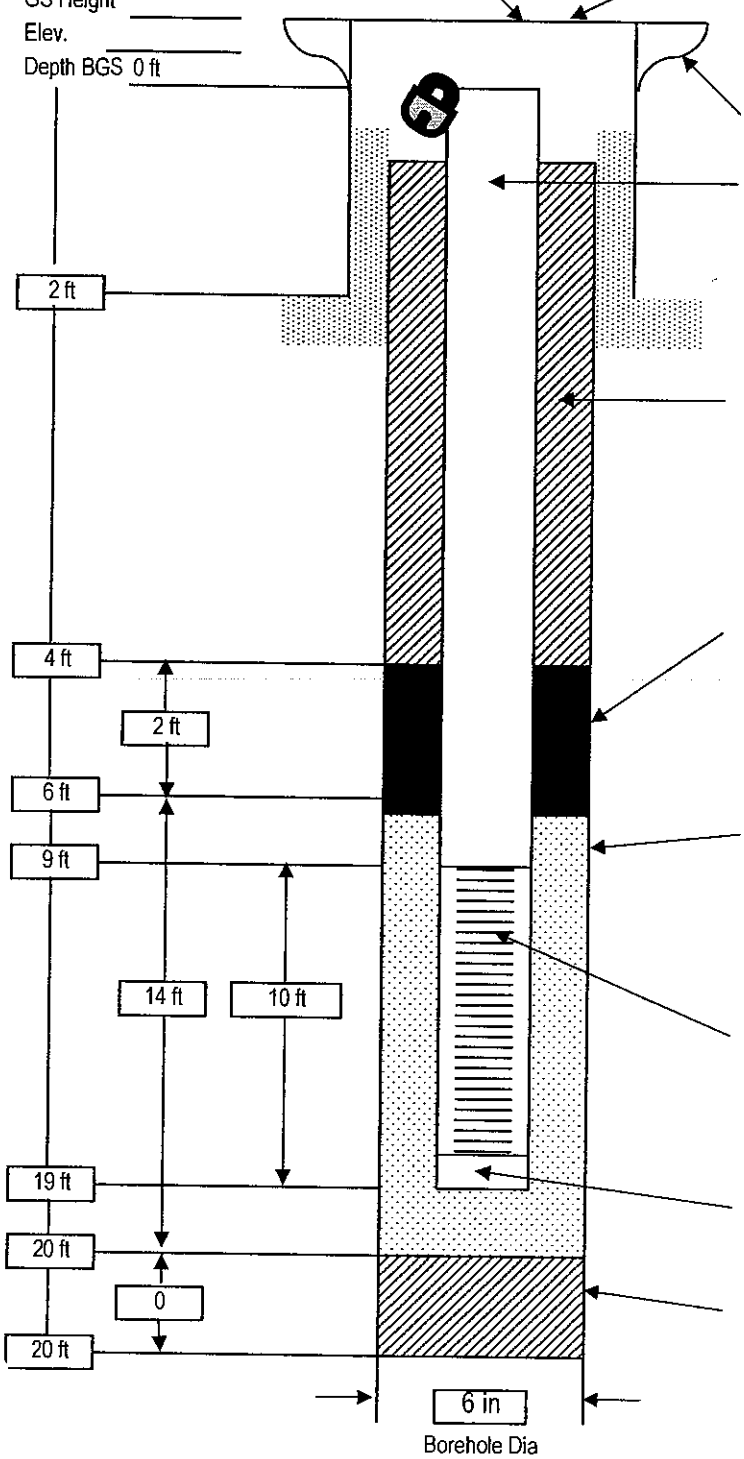

PROTECTIVE CASING
Material/Type Schedule 40 PVC
Diameter 2 inch
Watertight O-Ring ☑ Yes ☐ No
Breathes with Vadose Zone ☐ Yes ☑ No

SURFACE PAD
Composition & Size concrete

RISER PIPE
Type Schedule 40 PVC
Diameter 2 inch
Total Length (TOC to TOS) 19 ft
Ventilated Cap ☐ Yes ☑ No
O-Rings for Threads ☑ Yes ☐ No

GROUT
Composition & Amount cement bentonite mix, 0.33 gallons
Tremied ☑ Yes ☐ No
Interval BGS 0 - 4 ft

CENTRALIZERS ☐ Yes ☑ No
Depth(s) N/A

SEAL
Type bentonite pellets
Source Enviroplug
Setup/Hydration Time 1 hour
Volume Fluid Added 2 gallons
Tremied ☐ Yes ☑ No

FILTER PACK
Type DSI Number 1 sand
Amount Used 2.28 gallons
Tremied ☑ Yes ☐ No
Source Driller's Service Inc.
Gr. Size Dist number 1

SCREEN
Type Factory Cut Schedule 40 PVC
Diameter 2 in
Slot Size 0.010 in
Interval BGS 9 - 19 feet

SUMP
Interval BGS N/A
Type of Bottom Cap N/A

BACKFILL PLUG
Material N/A
Setup/Hydration Time N/A
Tremied ☐ Yes ☐ No

MONITORING WELL CONSTRUCTION LOG - Standard Flush Mount

Well No.: G4 MW - 027	Installation: Fort Stewart	Site: SWMU 39
Project No.: E0138.0002	Client/Project: USACE	
Contractor: SpecPro Environmental Services, .LLC	Drilling Contractor: Boart Longyear	
Start Date: 3/27/2008	End Date 3/27/2008	Time: 1045
Built By: Steven Gautney	Well Coordinates: N:	E:

Elev.
Height 0 ft
GS Elev.
GS Height
Elev.
Depth BGS 0 ft

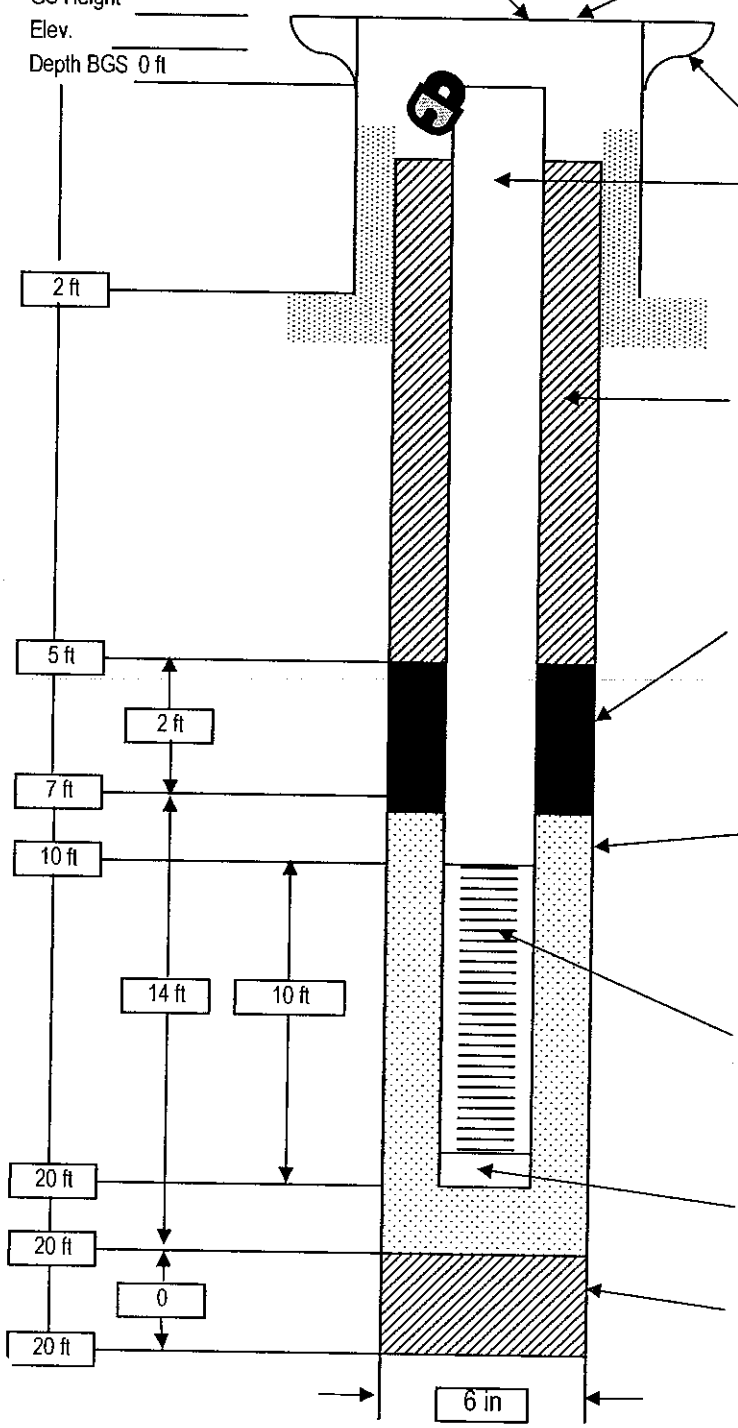

PROTECTIVE CASING
Material/Type: Schedule 40 PVC
Diameter: 2 inch
Watertight O-Ring: ☑ Yes ☐ No
Breathes with Vadose Zone: ☐ Yes ☑ No

SURFACE PAD
Composition & Size: concrete

RISER PIPE
Type: Schedule 40 PVC
Diameter: 2 inch
Total Length (TOC to TOS): 20 ft
Ventilated Cap: ☐ Yes ☑ No
O-Rings for Threads: ☑ Yes ☐ No

GROUT
Composition & Amount: cement bentonite mix, 0.33 gallons
Tremied: ☑ Yes ☐ No
Interval BGS: 0 - 5 ft

CENTRALIZERS
Depth(s): N/A
☐ Yes ☑ No

SEAL
Type: bentonite pellets
Source: Enviroplug
Setup/Hydration Time: 1 hour
Volume Fluid Added: 2 gallons
Tremied: ☐ Yes ☑ No

FILTER PACK
Type: DSI Number 1 sand
Amount Used: 2.28 gallons
Tremied: ☑ Yes ☐ No
Source: Driller's Service Inc.
Gr. Size Dist: number 1

SCREEN
Type: Factory Cut Schedule 40 PVC
Diameter: 2 in
Slot Size: 0.010 in
Interval BGS: 10 - 20 feet

SUMP
Interval BGS: N/A
Type of Bottom Cap: N/A

BACKFILL PLUG
Material: N/A
Setup/Hydration Time: N/A
Tremied: ☐ Yes ☐ No

MONITORING WELL CONSTRUCTION LOG - Standard Flush Mount

Well No.: G4 MW - 028	Installation: Fort Stewart	Site: SWMU 39
Project No.: E0138.0002	Client/Project: USACE	
Contractor: SpecPro Environmental Services, .LLC	Drilling Contractor: Boart Longyear	
Start Date: 3/26/2008	End Date 3/27/2008	Time: 1200
Built By: Steven Gautney	Well Coordinates: N:	E:

Elev.
Height 0 ft
GS Elev.
GS Height
Elev.
Depth BGS 0 ft

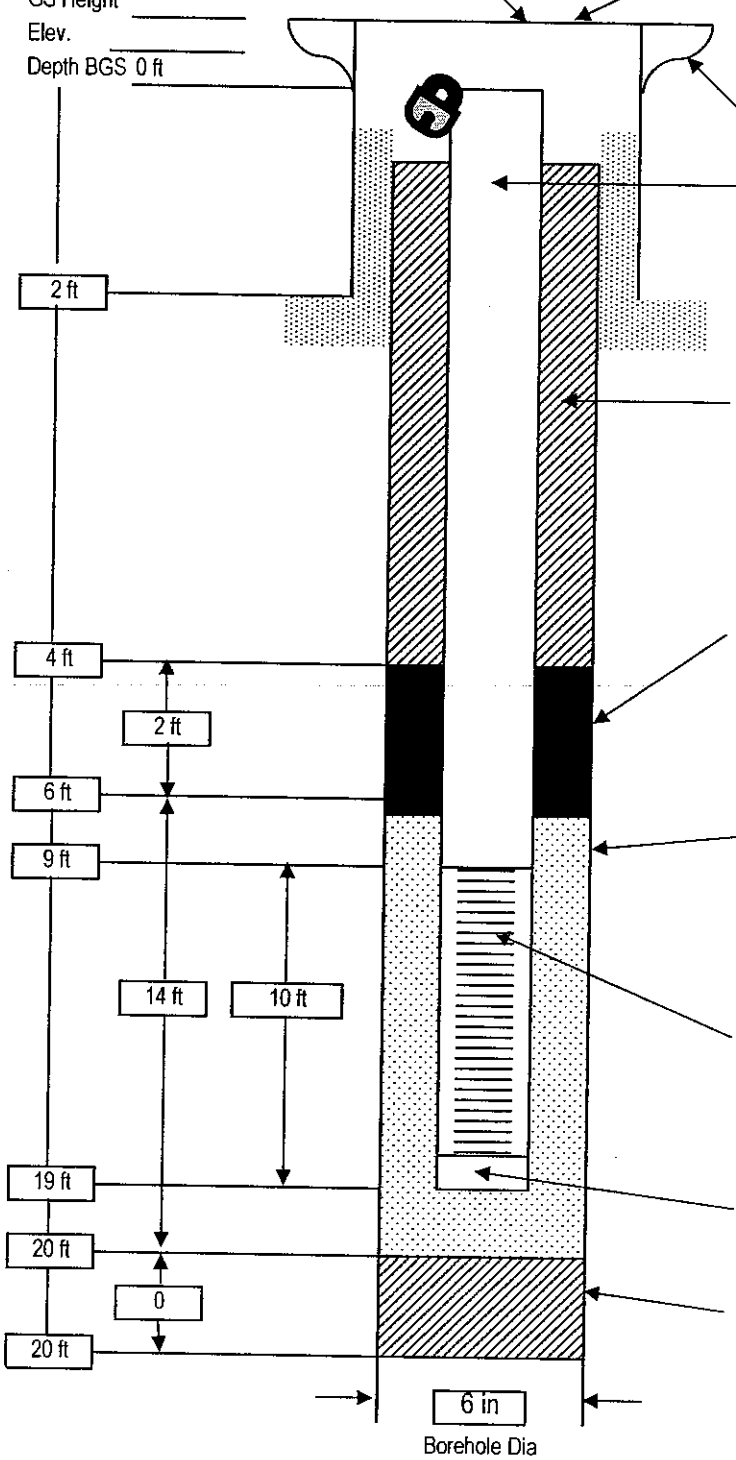

PROTECTIVE CASING
Material/Type Schedule 40 PVC
Diameter 2 inch
Watertight O-Ring ☑ Yes ☐ No
Breathes with Vadose Zone ☐ Yes ☑ No

SURFACE PAD
Composition & Size concrete

RISER PIPE
Type Schedule 40 PVC
Diameter 2 inch
Total Length (TOC to TOS) 20 ft
Ventilated Cap ☐ Yes ☑ No
O-Rings for Threads ☑ Yes ☐ No

GROUT
Composition & Amount cement bentonite mix, 0.33 gallons
Tremied ☑ Yes ☐ No
Interval BGS 0 - 4 ft

CENTRALIZERS ☐ Yes ☑ No
Depth(s) N/A

SEAL
Type bentonite pellets
Source Enviroplug
Setup/Hydration Time 1 hour
Volume Fluid Added 2 gallons
Tremied ☐ Yes ☑ No

FILTER PACK
Type DSI Number 1 sand
Amount Used 2.28 gallons
Tremied ☑ Yes ☐ No
Source Driller's Service Inc.
Gr. Size Dist number 1

SCREEN
Type Factory Cut Schedule 40 PVC
Diameter 2 in
Slot Size 0.010 in
Interval BGS 9 - 19 feet

SUMP
Interval BGS N/A
Type of Bottom Cap N/A

BACKFILL PLUG
Material N/A
Setup/Hydration Time N/A
Tremied ☐ Yes ☐ No

MONITORING WELL CONSTRUCTION LOG - Standard Flush Mount

Well No.: G4 MW - 029	Installation: Fort Stewart	Site: SWMU 39
Project No.: E0138.0002	Client/Project: USACE	
Contractor: SpecPro Environmental Services, .LLC	Drilling Contractor: Boart Longyear	
Start Date: 3/25/2008	End Date 3/27/2008	Time: 1415
Built By: Steven Gautney	Well Coordinates: N:	E:

Elev.
Height 0 ft
GS Elev.
GS Height
Elev.
Depth BGS 0 ft

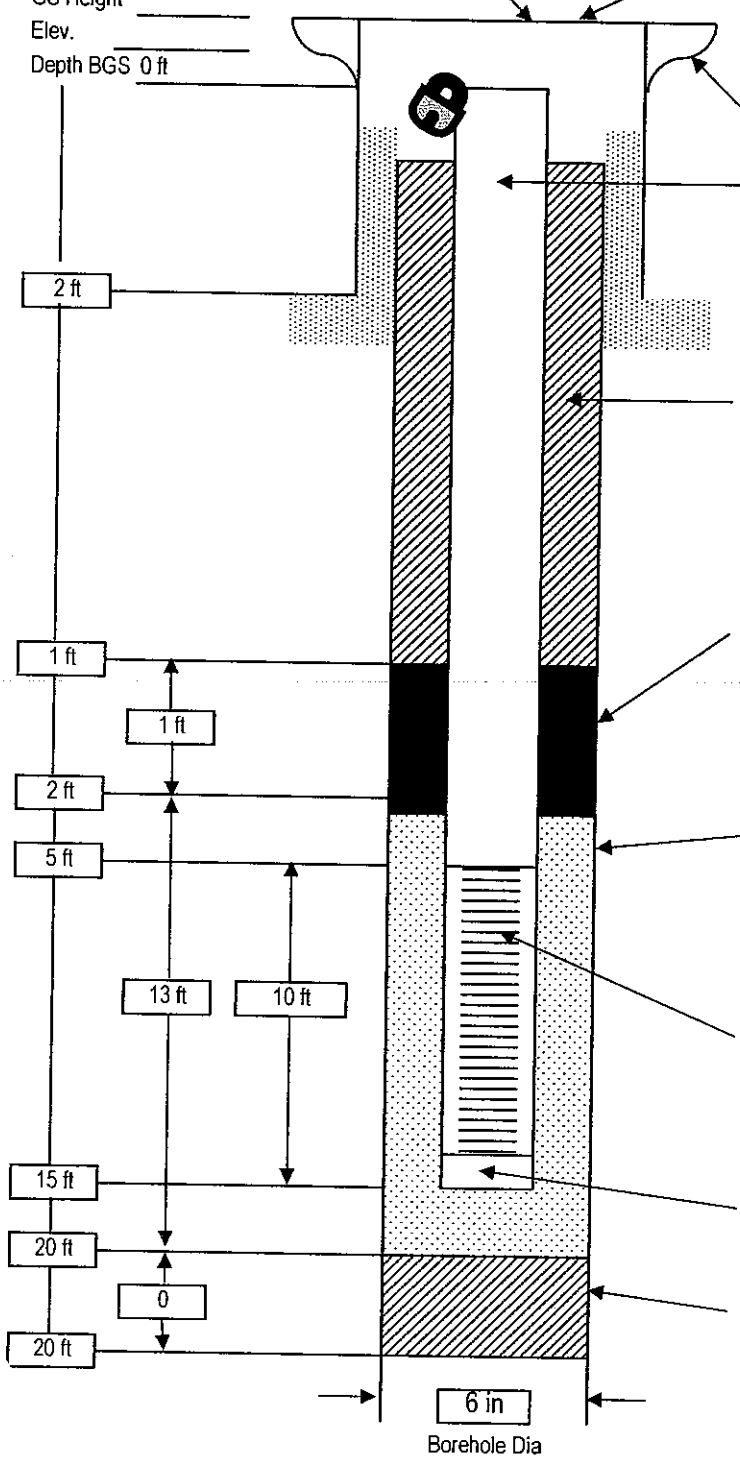

PROTECTIVE CASING
Material/Type Schedule 40 PVC
Diameter 2 inch
Watertight O-Ring ☑ Yes ☐ No
Breathes with Vadose Zone ☐ Yes ☑ No

SURFACE PAD
Composition & Size concrete

RISER PIPE
Type Schedule 40 PVC
Diameter 2 inch
Total Length (TOC to TOS) 15 ft
Ventilated Cap ☐ Yes ☑ No
O-Rings for Threads ☑ Yes ☐ No

GROUT
Composition & Amount cement bentonite mix, 0.163 gallons
Tremied ☑ Yes ☐ No
Interval BGS 0 - 1 ft

CENTRALIZERS ☐ Yes ☑ No
Depth(s) N/A

SEAL
Type bentonite pellets
Source Enviroplug
Setup/Hydration Time 1 hour
Volume Fluid Added 2 gallons
Tremied ☐ Yes ☑ No

FILTER PACK
Type DSI Number 1 sand
Amount Used 2.12 gallons
Tremied ☑ Yes ☐ No
Source Driller's Service Inc.
Gr. Size Dist number 1

SCREEN
Type Factory Cut Schedule 40 PVC
Diameter 2 in
Slot Size 0.010 in
Interval BGS 5 - 15 feet

SUMP
Interval BGS N/A
Type of Bottom Cap N/A

BACKFILL PLUG
Material N/A
Setup/Hydration Time N/A
Tremied ☐ Yes ☐ No

MONITORING WELL CONSTRUCTION LOG - Standard Flush Mount

Well No.: G4 MW - 030	Installation: Fort Stewart	Site: SWMU 39
Project No.: E0138.0002	Client/Project: USACE	
Contractor: SpecPro Environmental Services, .LLC	Drilling Contractor: Boart Longyear	
Start Date: 3/26/2008	End Date 3/27/2008	Time: 1545
Built By: Steven Gautney	Well Coordinates: N:	E:

Elev.
Height 0 ft
GS Elev.
GS Height
Elev.
Depth BGS 0 ft

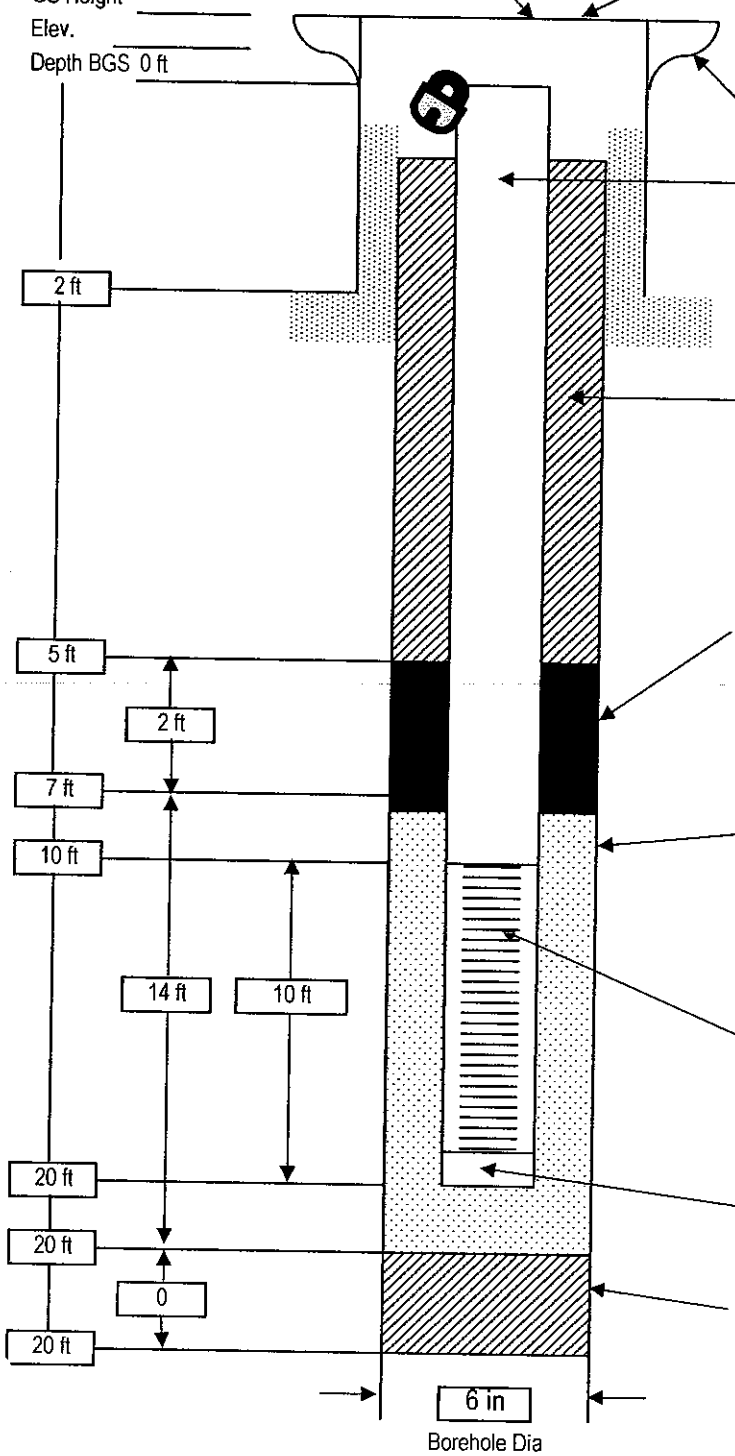

PROTECTIVE CASING
Material/Type: Schedule 40 PVC
Diameter: 2 inch
Watertight O-Ring: ☑ Yes ☐ No
Breathes with Vadose Zone: ☐ Yes ☑ No

SURFACE PAD
Composition & Size: concrete

RISER PIPE
Type: Schedule 40 PVC
Diameter: 2 inch
Total Length (TOC to TOS): 20 ft
Ventilated Cap: ☐ Yes ☑ No
O-Rings for Threads: ☑ Yes ☐ No

GROUT
Composition & Amount: cement bentonite mix, 0.33 gallons
Tremied: ☑ Yes ☐ No
Interval BGS: 0 - 5 ft

CENTRALIZERS
Depth(s): N/A
☐ Yes ☑ No

SEAL
Type: bentonite pellets
Source: Enviroplug
Setup/Hydration Time: 1 hour
Volume Fluid Added: 2 gallons
Tremied: ☐ Yes ☑ No

FILTER PACK
Type: DSI Number 1 sand
Amount Used: 2.28 gallons
Tremied: ☑ Yes ☐ No
Source: Driller's Service Inc.
Gr. Size Dist: number 1

SCREEN
Type: Factory Cut Schedule 40 PVC
Diameter: 2 in
Slot Size: 0.010 in
Interval BGS: 10 - 20 feet

SUMP
Interval BGS: N/A
Type of Bottom Cap: N/A

BACKFILL PLUG
Material: N/A
Setup/Hydration Time: N/A
Tremied: ☐ Yes ☐ No

MONITORING WELL CONSTRUCTION LOG - Standard Flush Mount

Well No.: G4 MW - 031	Installation: Fort Stewart	Site: SWMU 39
Project No.: E0138.0002	Client/Project: USACE	
Contractor: SpecPro Environmental Services, .LLC	Drilling Contractor: Boart Longyear	
Start Date: 3/26/2008	End Date 3/27/2008	Time: 1640
Built By: Steven Gautney	Well Coordinates: N:	E:

Elev.
Height 0 ft
GS Elev.
GS Height
Elev.
Depth BGS 0 ft

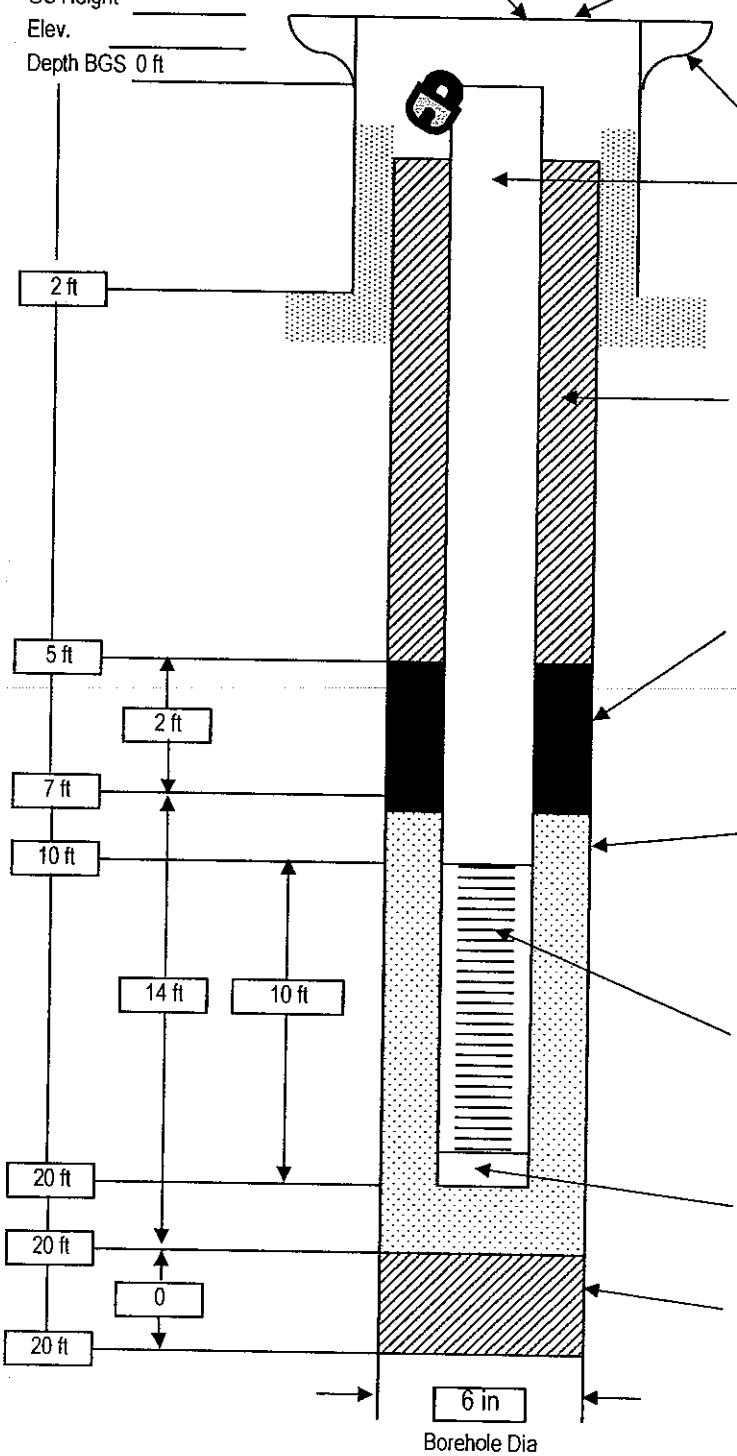

PROTECTIVE CASING
Material/Type: Schedule 40 PVC
Diameter: 2 inch
Watertight O-Ring: ☑ Yes ☐ No
Breathes with Vadose Zone: ☐ Yes ☑ No

SURFACE PAD
Composition & Size: concrete

RISER PIPE
Type: Schedule 40 PVC
Diameter: 2 inch
Total Length (TOC to TOS): 20 ft
Ventilated Cap: ☐ Yes ☑ No
O-Rings for Threads: ☑ Yes ☐ No

GROUT
Composition & Amount: cement bentonite mix, 0.33 gallons
Tremied: ☑ Yes ☐ No
Interval BGS: 0 - 5 ft

CENTRALIZERS
☐ Yes ☑ No
Depth(s): N/A

SEAL
Type: bentonite pellets
Source: Enviroplug
Setup/Hydration Time: 1 hour
Volume Fluid Added: 2 gallons
Tremied: ☐ Yes ☑ No

FILTER PACK
Type: DSI Number 1 sand
Amount Used: 2.28 gallons
Tremied: ☑ Yes ☐ No
Source: Driller's Service Inc.
Gr. Size Dist: number 1

SCREEN
Type: Factory Cut Schedule 40 PVC
Diameter: 2 in
Slot Size: 0.010 in
Interval BGS: 10 - 20 feet

SUMP
Interval BGS: N/A
Type of Bottom Cap: N/A

BACKFILL PLUG
Material: N/A
Setup/Hydration Time: N/A
Tremied: ☐ Yes ☐ No

MONITORING WELL CONSTRUCTION LOG - Standard Flush Mount

Well No.: G4 MW - 032	Installation: Fort Stewart	Site: SWMU 39
Project No.: E0138.0002	Client/Project: USACE	
Contractor: SpecPro Environmental Services, .LLC	Drilling Contractor: Boart Longyear	
Start Date: 3/26/2008	End Date 3/27/2008	Time: 800
Built By: Steven Gautney	Well Coordinates: N:	E:

Elev.
Height 0 ft
GS Elev.
GS Height
Elev.
Depth BGS 0 ft

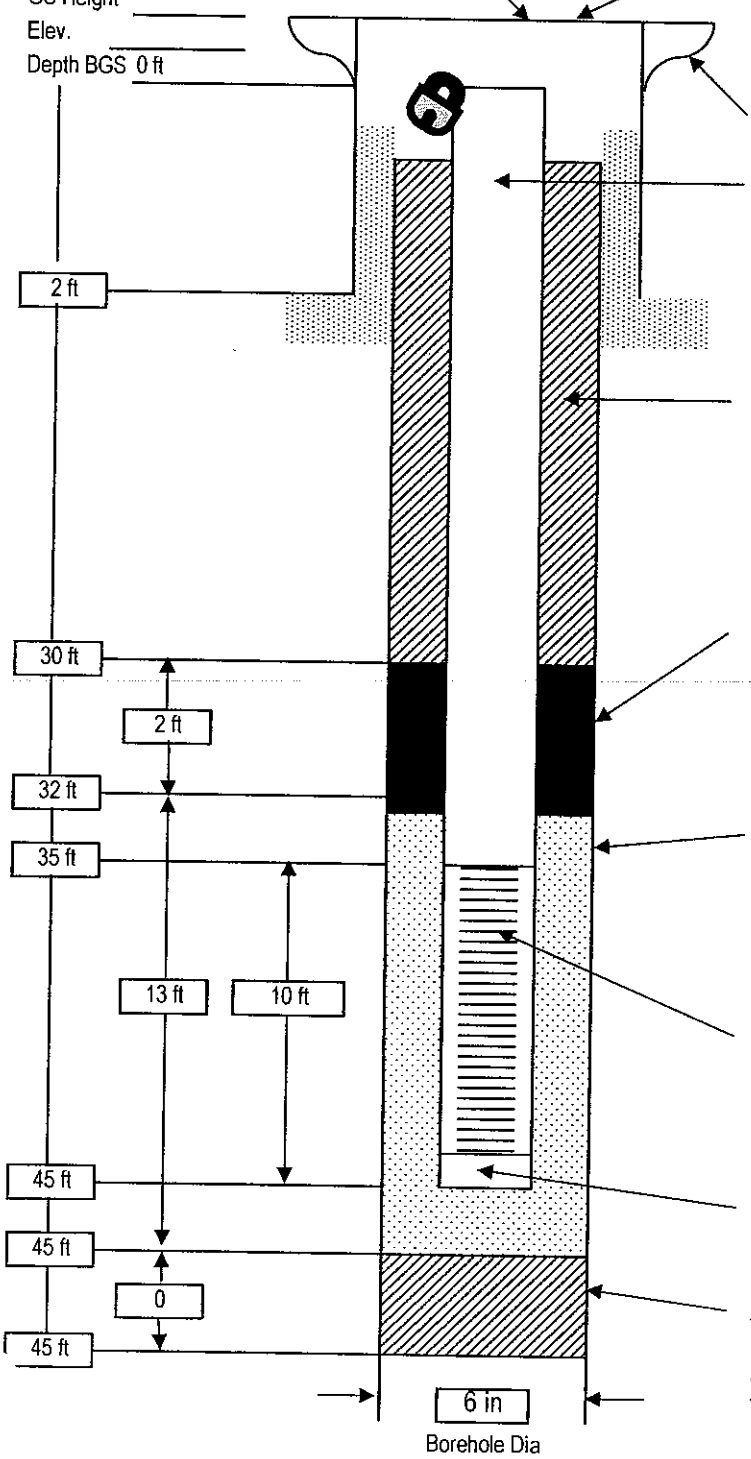

PROTECTIVE CASING
Material/Type Schedule 40 PVC
Diameter 2 inch
Watertight O-Ring ☑ Yes ☐ No
Breathes with Vadose Zone ☐ Yes ☑ No

SURFACE PAD
Composition & Size concrete

RISER PIPE
Type Schedule 40 PVC
Diameter 2 inch
Total Length (TOC to TOS) 45 ft
Ventilated Cap ☐ Yes ☑ No
O-Rings for Threads ☐ Yes ☐ No

GROUT
Composition & Amount cement bentonite mix, 4.89 gallons
Tremied ☑ Yes ☐ No
Interval BGS 0 - 30 ft

CENTRALIZERS ☐ Yes ☑ No
Depth(s) N/A

SEAL
Type bentonite pellets
Source Enviroplug
Setup/Hydration Time 1 hour
Volume Fluid Added 2 gallons
Tremied ☐ Yes ☑ No

FILTER PACK
Type DSI Number 1 sand
Amount Used 2.28 gallons
Tremied ☑ Yes ☐ No
Source Driller's Service Inc.
Gr. Size Dist number 1

SCREEN
Type Factory Cut Schedule 40 PVC
Diameter 2 in
Slot Size 0.010 in
Interval BGS 35 - 45 feet

SUMP
Interval BGS N/A
Type of Bottom Cap N/A

BACKFILL PLUG
Material N/A
Setup/Hydration Time N/A
Tremied ☐ Yes ☐ No

WELL CONSTRUCTION LOG- UNCONSOLIDATED

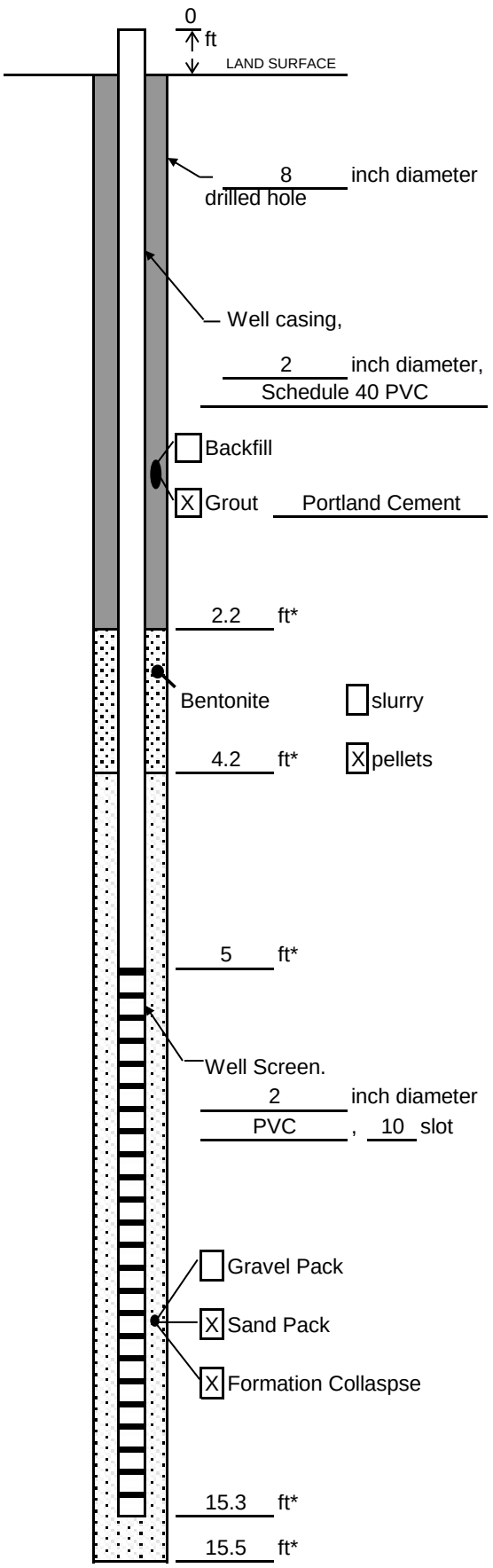

Measuring Point is
Top of Well Casing
Unless Otherwise Noted.

* Depth Below Land Surface
NM = Not Measured

Project: GP09HAFS.F39A.DG0FI Well: G4MW-033

Town/City: Fort Stewart

County: Liberty State: Georgia

Permit No.: N/A

Land-Surface Elevation and Datum:

N/A feet ☐ Surveyed ☐ Estimated

Installation Date(s): 3/16/2010

Drilling Method: Hollow Stem Auger

Drilling Contractor: ARM

Drilling Fluid: None

Development Technique(s) and Date(s)

Electric Submersible Pump with Surging, 4/1/2010

Fluid Loss During Drilling: N/A gallons

Water Removed During Development: 60 gallons

Static Depth to Water: 3.57 feet below M.P.

Pumping Depth to Water: NM feet below M.P.

Pumping Duration: NM hours

Yield: NM gpm Date: N/A

Specific Capacity: NM gpm/ft

Well Purpose: Monitoring Well

Remarks: Flush Mount Manhole Completion with Locking Cap

Prepared by: Robby Shealy

WELL CONSTRUCTION LOG- UNCONSOLIDATED

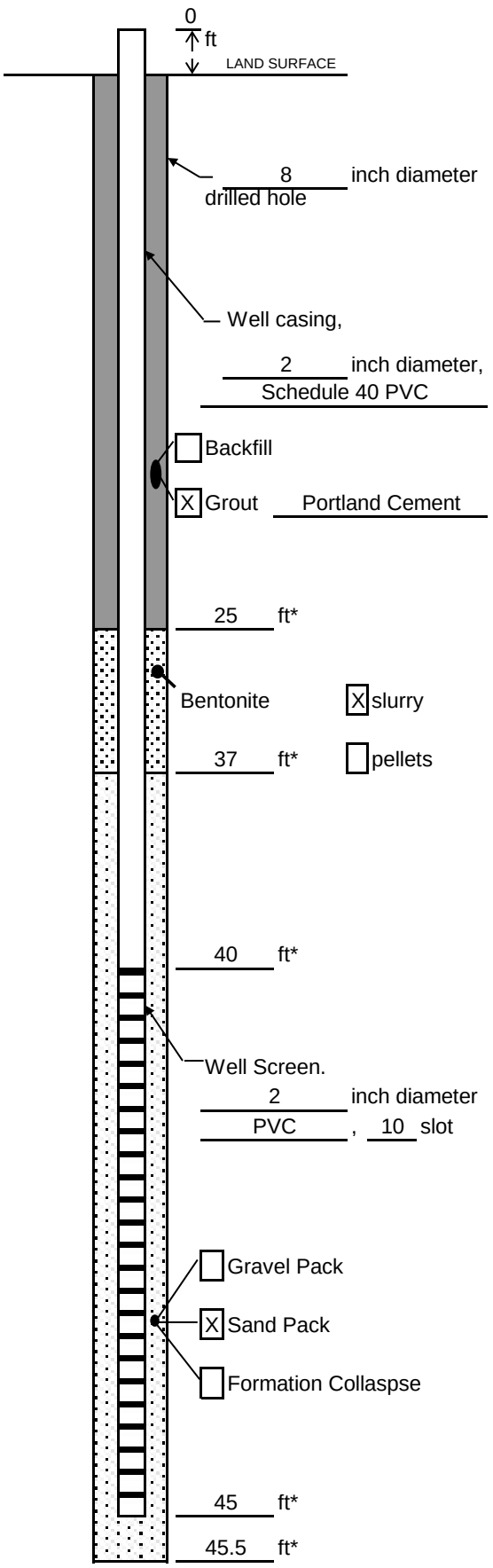

Measuring Point is
Top of Well Casing
Unless Otherwise Noted.

* Depth Below Land Surface
NM = Not Measured

Project: GP09HAFS.F39A.DG0FI Well: G4MW-034

Town/City: Fort Stewart

County: Liberty State: Georgia

Permit No.: N/A

Land-Surface Elevation and Datum:

N/A feet ☐ Surveyed ☐ Estimated

Installation Date(s): 3/23/2010-3/25/2010

Drilling Method: Hollow Stem Auger

Drilling Contractor: ARM

Drilling Fluid: None

Development Technique(s) and Date(s)

Electric Submersible Pump with Surging, 4/2/2010

Fluid Loss During Drilling: N/A gallons

Water Removed During Development: 35 gallons

Static Depth to Water: 0.53 feet below M.P.

Pumping Depth to Water: NM feet below M.P.

Pumping Duration: NM hours

Yield: NM gpm Date: N/A

Specific Capacity: NM gpm/ft

Well Purpose: Monitoring Well

Remarks: Flush Mount Manhole Completion with Locking Cap
Some formation collapse above sand pack

Prepared by: Robby Shealy

WELL CONSTRUCTION LOG- UNCONSOLIDATED

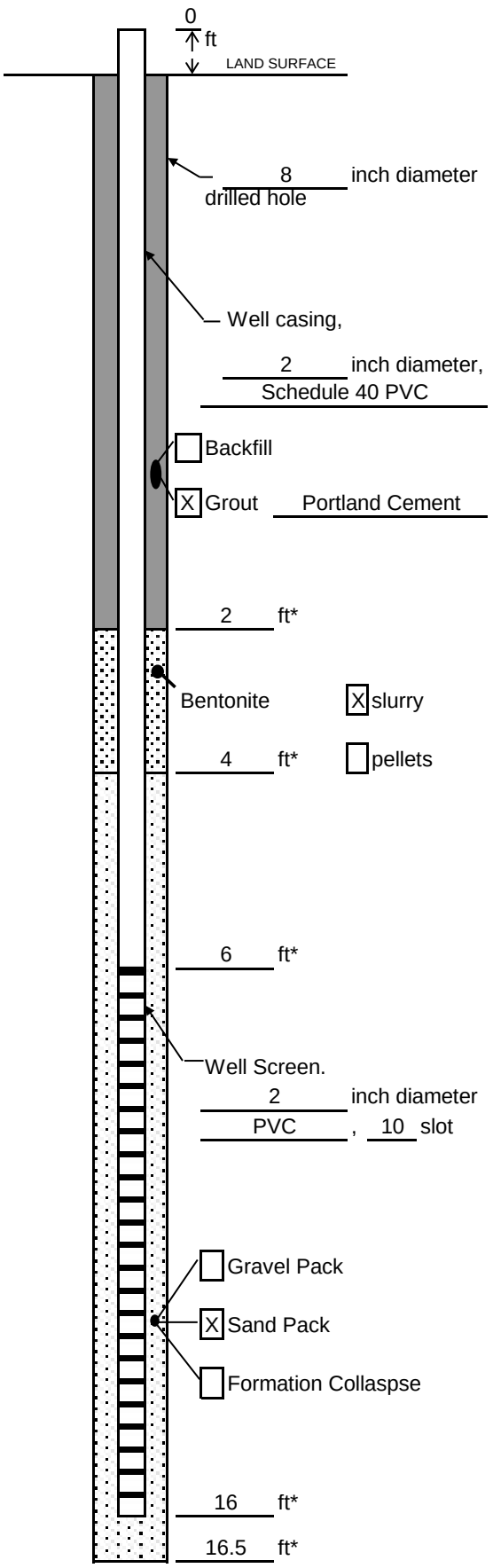

Measuring Point is
Top of Well Casing
Unless Otherwise Noted.

* Depth Below Land Surface
NM = Not Measured

Project: GP09HAFS.F39A.DG0FI Well: G4MW-035

Town/City: Fort Stewart

County: Liberty State: Georgia

Permit No.: N/A

Land-Surface Elevation and Datum:

N/A feet ☐ Surveyed ☐ Estimated

Installation Date(s): 3/24/2010

Drilling Method: Hollow Stem Auger

Drilling Contractor: ARM

Drilling Fluid: None

Development Technique(s) and Date(s)

Electric Submersible Pump with Surging, 4/2/2010

Fluid Loss During Drilling: N/A gallons

Water Removed During Development: 70 gallons

Static Depth to Water: 4.21 feet below M.P.

Pumping Depth to Water: NM feet below M.P.

Pumping Duration: NM hours

Yield: NM gpm Date: N/A

Specific Capacity: NM gpm/ft

Well Purpose: Monitoring Well

Remarks: Flush Mount Manhole Completion with Locking Cap

Prepared by: Robby Shealy

WELL CONSTRUCTION LOG- UNCONSOLIDATED

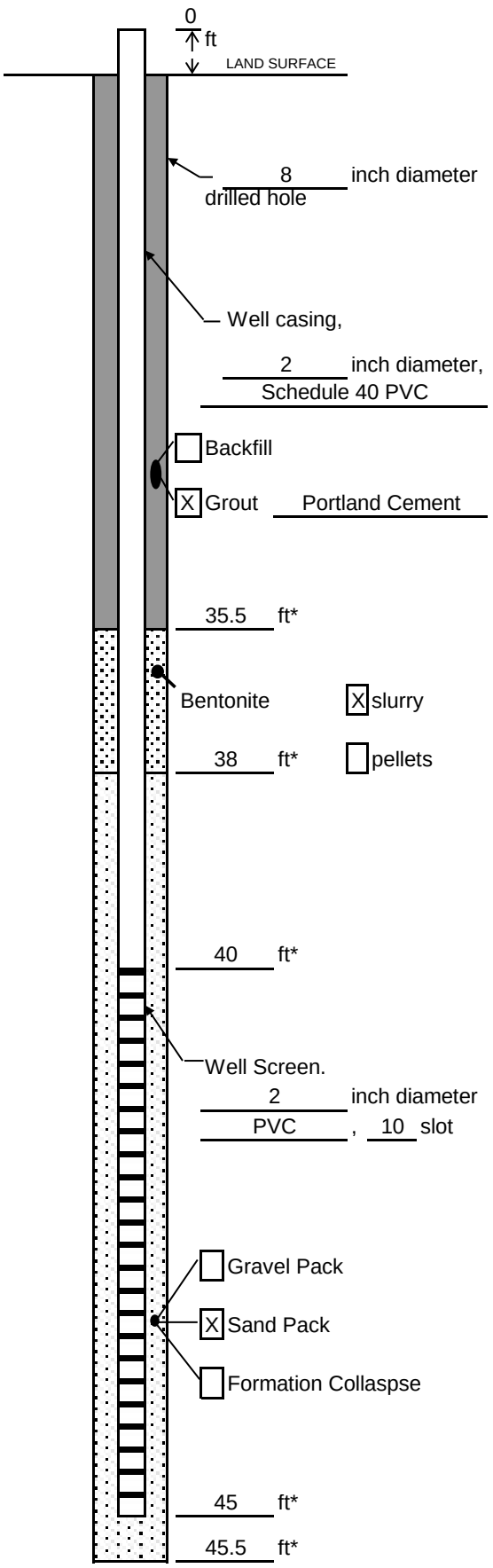

Measuring Point is
Top of Well Casing
Unless Otherwise Noted.

* Depth Below Land Surface
NM = Not Measured

Project: GP09HAFS.F39A.DG0FI Well: G4MW-036

Town/City: Fort Stewart

County: Liberty State: Georgia

Permit No.: N/A

Land-Surface Elevation and Datum:

N/A feet ☐ Surveyed ☐ Estimated

Installation Date(s): 3/29/2010

Drilling Method: Hollow Stem Auger

Drilling Contractor: ARM

Drilling Fluid: None

Development Technique(s) and Date(s)

Electric Submersible Pump with Surging, 4/2/2010

Fluid Loss During Drilling: N/A gallons

Water Removed During Development: 50 gallons

Static Depth to Water: 2.02 feet below M.P.

Pumping Depth to Water: NM feet below M.P.

Pumping Duration: NM hours

Yield: NM gpm Date: N/A

Specific Capacity: NM gpm/ft

Well Purpose: Monitoring Well

Remarks: Flush Mount Manhole Completion with Locking Cap

Prepared by: Robby Shealy

WELL CONSTRUCTION LOG- UNCONSOLIDATED

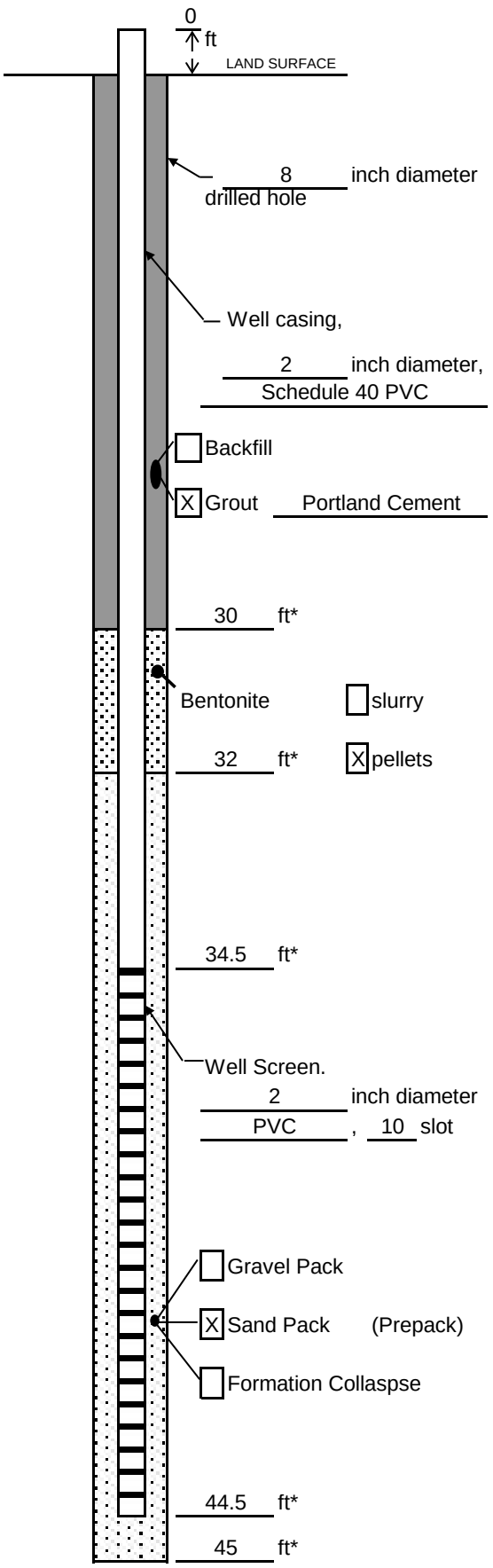

Measuring Point is
Top of Well Casing
Unless Otherwise Noted.

* Depth Below Land Surface
NM = Not Measured

Project: GP09HAFS.F39A.DG0FI Well: G4MW-037

Town/City: Fort Stewart

County: Liberty State: Georgia

Permit No.: N/A

Land-Surface Elevation and Datum:

N/A feet ☐ Surveyed ☐ Estimated

Installation Date(s): 11/12/2010

Drilling Method: Hollow Stem Auger

Drilling Contractor: ARM

Drilling Fluid: None

Development Technique(s) and Date(s)

Fluid Loss During Drilling: N/A gallons

Water Removed During Development: 55 gallons

Static Depth to Water: NM feet below M.P.

Pumping Depth to Water: NM feet below M.P.

Pumping Duration: 1 hours

Yield: NM gpm Date: N/A

Specific Capacity: NM gpm/ft

Well Purpose: Monitoring Well

Remarks: Flush Mount Manhole Completion with Locking Cap

Prepared by: Josh Frizzell

WELL CONSTRUCTION LOG- UNCONSOLIDATED

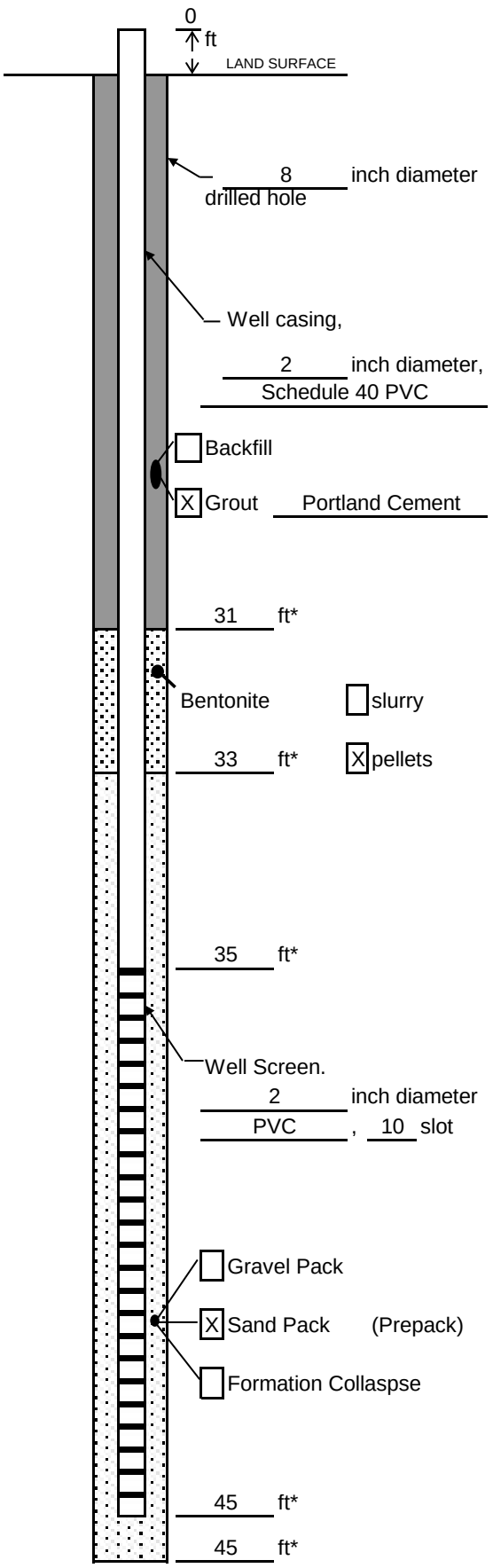

Measuring Point is
Top of Well Casing
Unless Otherwise Noted.

* Depth Below Land Surface
NM = Not Measured

Project GP09HAFS.F39A.DG0FI Well G4MW-038

Town/City Fort Stewart

County Liberty State Georgia

Permit No. N/A

Land-Surface Elevation and Datum:

N/A feet ☐ Surveyed ☐ Estimated

Installation Date(s) 11/15/2010

Drilling Method Hollow Stem Auger

Drilling Contractor ARM

Drilling Fluid None

Development Technique(s) and Date(s)

Electric Submersible Pump with Surging, 11/19/2010

Fluid Loss During Drilling N/A gallons

Water Removed During Development 55 gallons

Static Depth to Water NM feet below M.P.

Pumping Depth to Water NM feet below M.P.

Pumping Duration 1 hours

Yield NM gpm Date N/A

Specific Capacity NM gpm/ft

Well Purpose Monitoring Well

Remarks Flush Mount Manhole Completion with Locking Cap

Prepared by Josh Frizzell

WELL CONSTRUCTION LOG- UNCONSOLIDATED

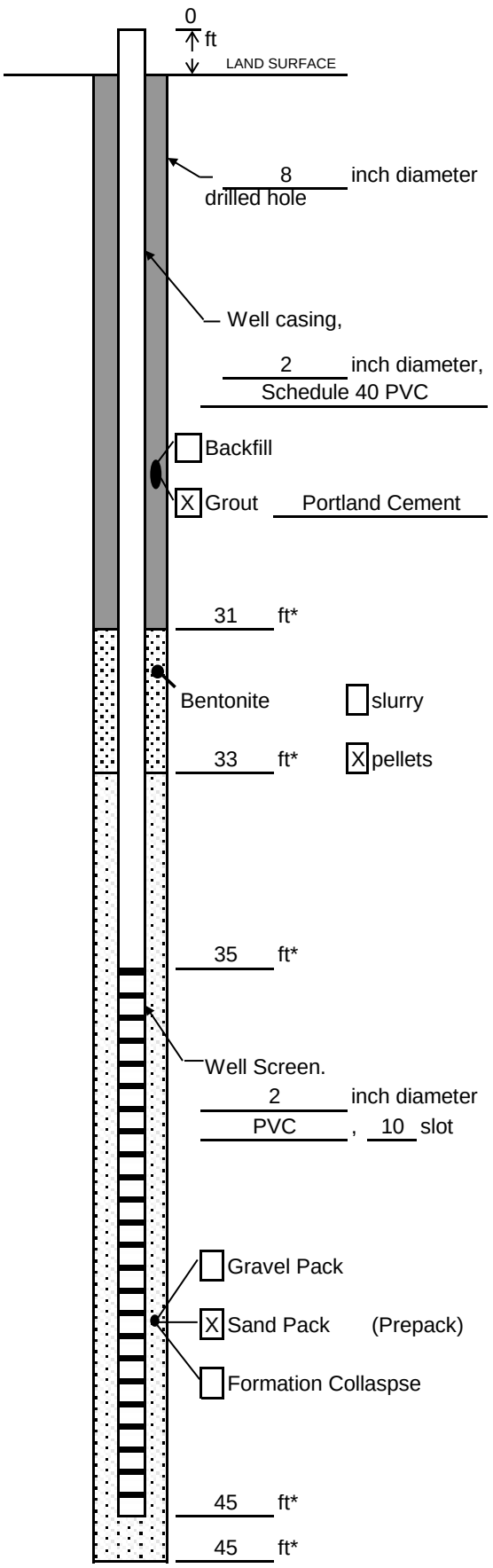

Measuring Point is
Top of Well Casing
Unless Otherwise Noted.

* Depth Below Land Surface
NM = Not Measured

Project: GP09HAFS.F39A.DG0FI Well: G4MW-039

Town/City: Fort Stewart

County: Liberty State: Georgia

Permit No.: N/A

Land-Surface Elevation and Datum:

N/A feet ☐ Surveyed ☐ Estimated

Installation Date(s): 11/16/2010

Drilling Method: Hollow Stem Auger

Drilling Contractor: ARM

Drilling Fluid: None

Development Technique(s) and Date(s)

Fluid Loss During Drilling: N/A gallons

Water Removed During Development: 55 gallons

Static Depth to Water: NM feet below M.P.

Pumping Depth to Water: NM feet below M.P.

Pumping Duration: 1 hours

Yield: NM gpm Date: N/A

Specific Capacity: NM gpm/ft

Well Purpose: Monitoring Well

Remarks: Flush Mount Manhole Completion with Locking Cap

Prepared by: Josh Frizzell

WELL CONSTRUCTION LOG- UNCONSOLIDATED

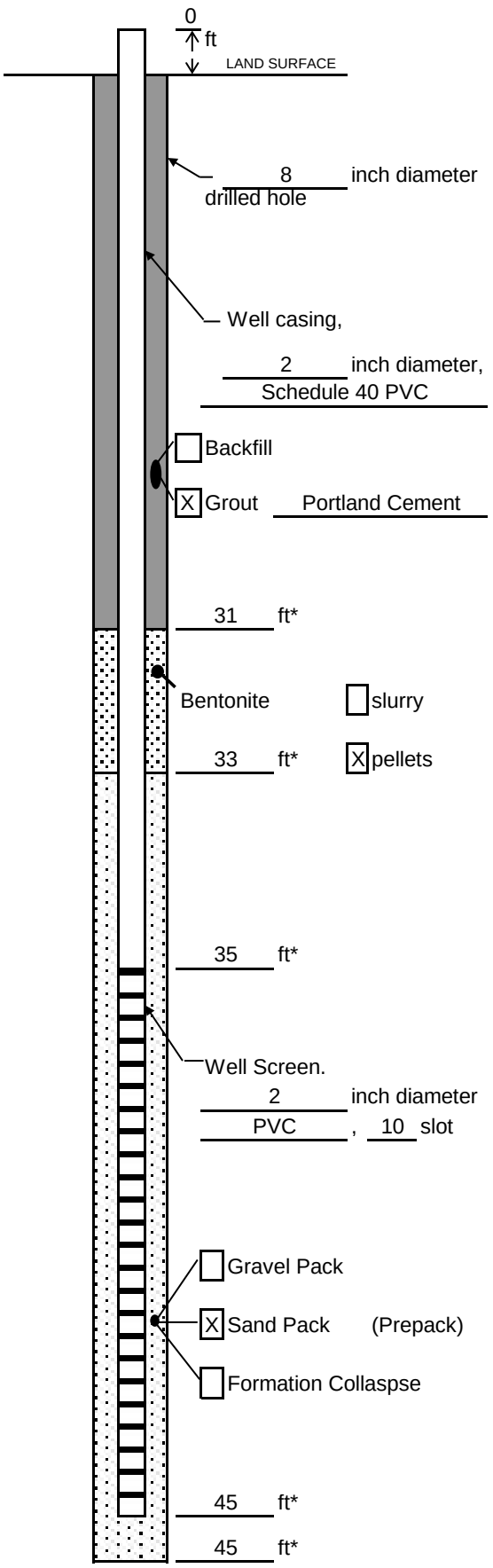

Measuring Point is
Top of Well Casing
Unless Otherwise Noted.

* Depth Below Land Surface
NM = Not Measured

Project: GP09HAFS.F39A.DG0FI Well: G4MW-040

Town/City: Fort Stewart

County: Liberty State: Georgia

Permit No.: N/A

Land-Surface Elevation and Datum:

N/A feet ☐ Surveyed ☐ Estimated

Installation Date(s): 11/17/2010

Drilling Method: Hollow Stem Auger

Drilling Contractor: ARM

Drilling Fluid: None

Development Technique(s) and Date(s)

Electric Submersible Pump with Surging, 11/19/2010

Fluid Loss During Drilling: N/A gallons

Water Removed During Development: 55 gallons

Static Depth to Water: NM feet below M.P.

Pumping Depth to Water: NM feet below M.P.

Pumping Duration: 1 hours

Yield: NM gpm Date: N/A

Specific Capacity: NM gpm/ft

Well Purpose: Monitoring Well

Remarks: Flush Mount Manhole Completion with Locking Cap

Prepared by: Josh Frizzell

WELL CONSTRUCTION LOG- UNCONSOLIDATED

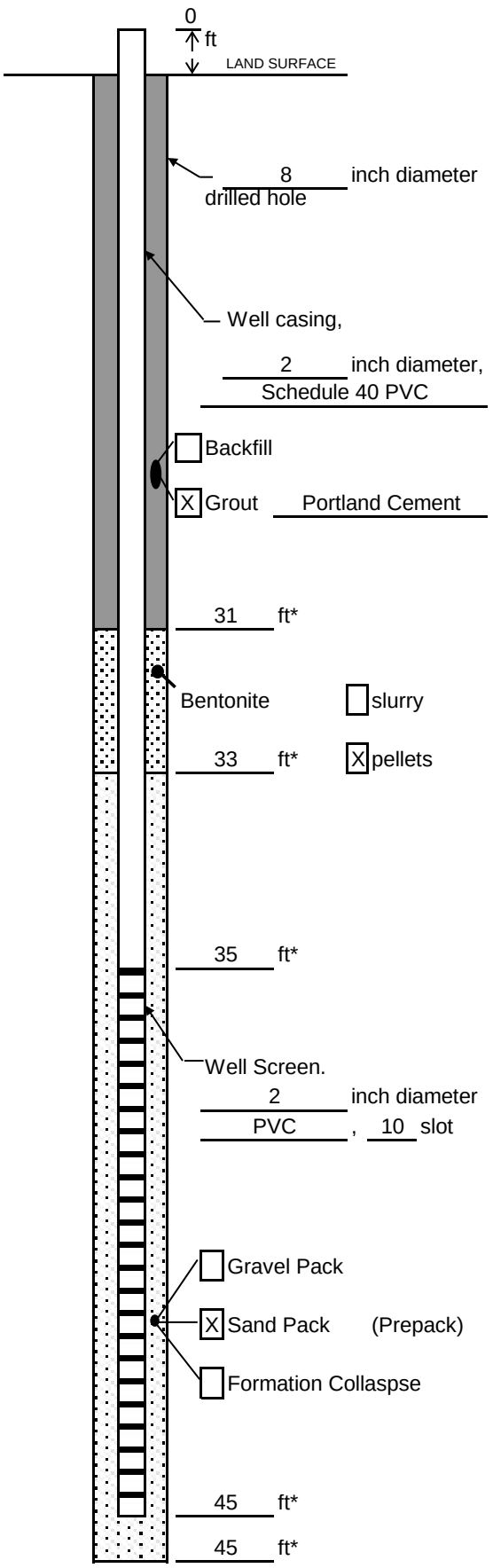

Measuring Point is
Top of Well Casing
Unless Otherwise Noted.

* Depth Below Land Surface
NM = Not Measured

Project GP09HAFS.F39A.DG0FI Well G4MW-041

Town/City Fort Stewart

County Liberty State Georgia

Permit No. N/A

Land-Surface Elevation and Datum:

N/A feet ☐ Surveyed ☐ Estimated

Installation Date(s) 11/17/2010

Drilling Method Hollow Stem Auger

Drilling Contractor ARM

Drilling Fluid None

Development Technique(s) and Date(s)

Electric Submersible Pump with Surging, 11/20/2010

Fluid Loss During Drilling N/A gallons

Water Removed During Development 55 gallons

Static Depth to Water NM feet below M.P.

Pumping Depth to Water NM feet below M.P.

Pumping Duration 1 hours

Yield NM gpm Date N/A

Specific Capacity NM gpm/ft

Well Purpose Monitoring Well

Remarks Flush Mount Manhole Completion with Locking Cap

Prepared by Josh Frizzell

WELL CONSTRUCTION LOG- UNCONSOLIDATED

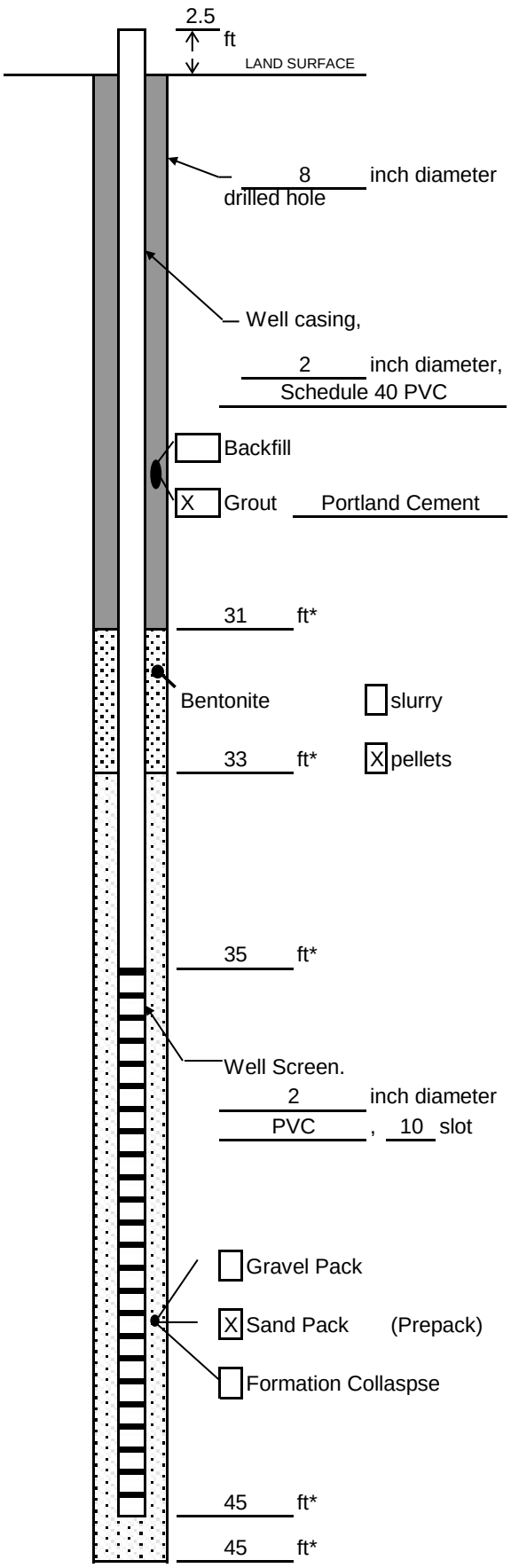

Measuring Point is
Top of Well Casing
Unless Otherwise Noted.

* Depth Below Land Surface
NM = Not Measured

Project: GP09HAFS.F39A.DG0FI Well: G4MW-042

Town/City: Fort Stewart

County: Liberty State: Georgia

Permit No.: N/A

Land-Surface Elevation and Datum:

N/A feet ☐ Surveyed ☐ Estimated

Installation Date(s): 11/18/2010

Drilling Method: Hollow Stem Auger

Drilling Contractor: ARM

Drilling Fluid: None

Development Technique(s) and Date(s)

Electric Submersible Pump with Surging, 11/20/2010

Fluid Loss During Drilling: N/A gallons

Water Removed During Development: 55 gallons

Static Depth to Water: NM feet below M.P.

Pumping Depth to Water: NM feet below M.P.

Pumping Duration: 1 hours

Yield: NM gpm Date: N/A

Specific Capacity: NM gpm/ft

Well Purpose: Monitoring Well

Remarks: Stickup Completion with Locking Cap

Prepared by: Josh Frizzell

WELL CONSTRUCTION LOG- UNCONSOLIDATED

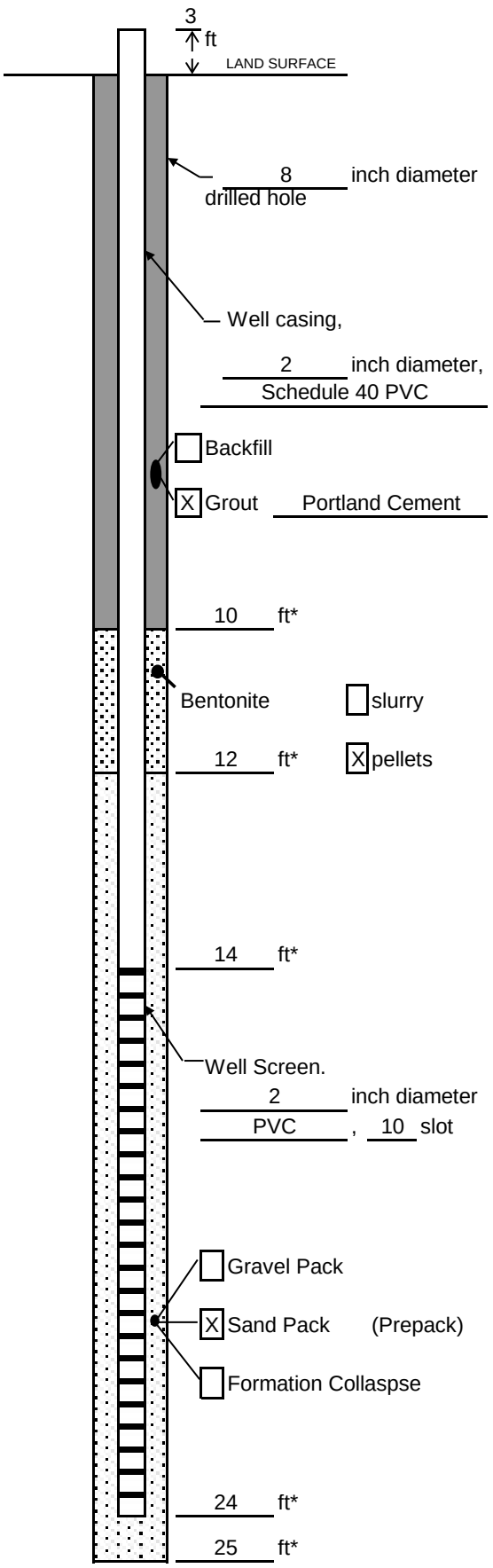

Measuring Point is
Top of Well Casing
Unless Otherwise Noted.

* Depth Below Land Surface
NM = Not Measured

Project: GP09HAFS.F39A.DG0FI Well: G4MW-043

Town/City: Fort Stewart

County: Liberty State: Georgia

Permit No.: N/A

Land-Surface Elevation and Datum:

N/A feet ☐ Surveyed ☐ Estimated

Installation Date(s): 11/18/2010

Drilling Method: Hollow Stem Auger

Drilling Contractor: ARM

Drilling Fluid: None

Development Technique(s) and Date(s)

Electric Submersible Pump with Surging, 11/20/2010

Fluid Loss During Drilling: N/A gallons

Water Removed During Development: 55 gallons

Static Depth to Water: NM feet below M.P.

Pumping Depth to Water: NM feet below M.P.

Pumping Duration: 1 hours

Yield: NM gpm Date: N/A

Specific Capacity: NM gpm/ft

Well Purpose: Monitoring Well

Remarks: Stickup Completion with Locking Cap

Prepared by: Josh Frizzell

WELL CONSTRUCTION LOG- UNCONSOLIDATED

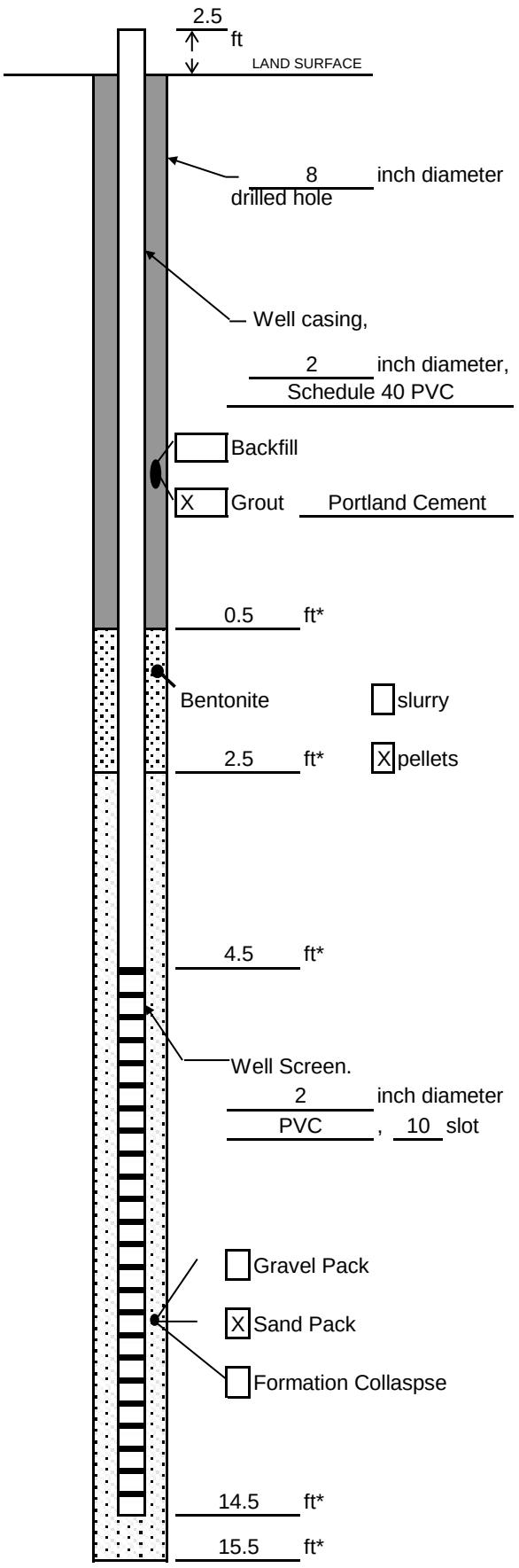

Measuring Point is
Top of Well Casing
Unless Otherwise Noted.

* Depth Below Land Surface
NM = Not Measured

Project: GP09HAFS.F39A.DG0FI Well: G4MW-044

Town/City: Fort Stewart

County: Liberty State: Georgia

Permit No.: N/A

Land-Surface Elevation and Datum:

N/A feet ☐ Surveyed ☐ Estimated

Installation Date(s): 11/19/2010

Drilling Method: Hollow Stem Auger

Drilling Contractor: ARM

Drilling Fluid: None

Development Technique(s) and Date(s)

Electric Submersible Pump with Surging, 11/20/2010

Fluid Loss During Drilling: N/A gallons

Water Removed During Development: 55 gallons

Static Depth to Water: NM feet below M.P.

Pumping Depth to Water: NM feet below M.P.

Pumping Duration: 1 hours

Yield: NM gpm Date: N/A

Specific Capacity: NM gpm/ft

Well Purpose: Monitoring Well

Remarks: Stickup Completion with Locking Cap

Prepared by: Josh Frizzell

WELL CONSTRUCTION LOG- UNCONSOLIDATED

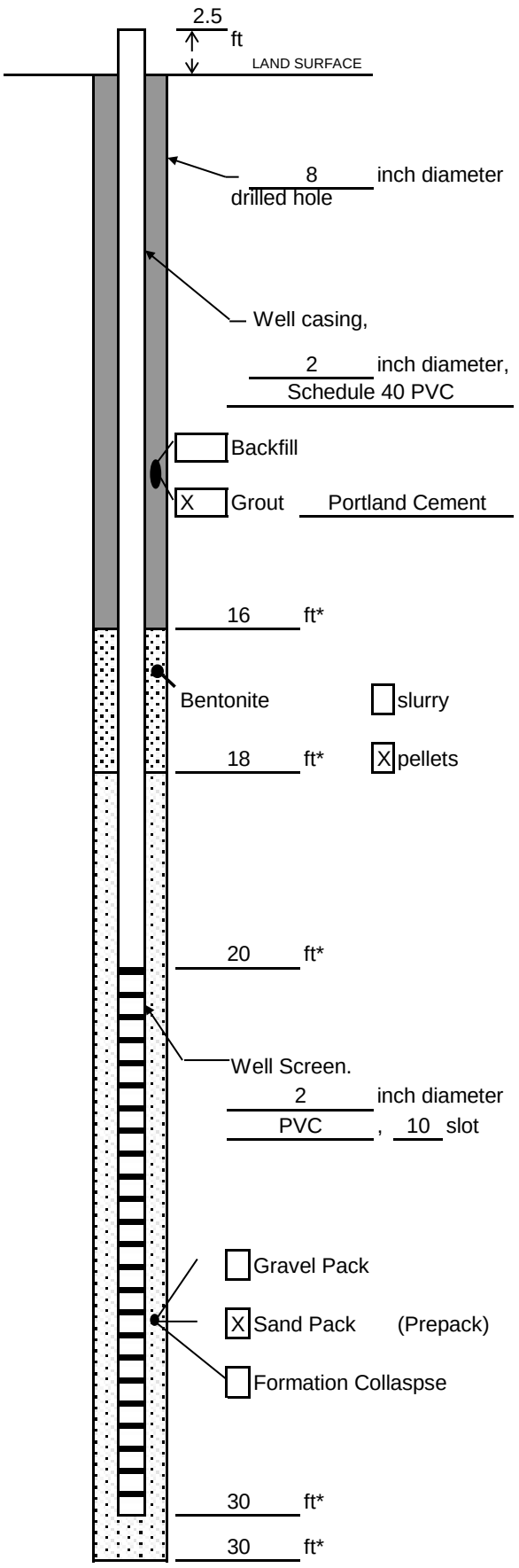

Measuring Point is
Top of Well Casing
Unless Otherwise Noted.

* Depth Below Land Surface
NM = Not Measured

Project: GP09HAFS.F39A.DG0FI Well: G4MW-045

Town/City: Fort Stewart

County: Liberty State: Georgia

Permit No.: N/A

Land-Surface Elevation and Datum:

N/A feet ☐ Surveyed ☐ Estimated

Installation Date(s): 11/19/2010

Drilling Method: Hollow Stem Auger

Drilling Contractor: ARM

Drilling Fluid: None

Development Technique(s) and Date(s)

Electric Submersible Pump with Surging, 11/20/2010

Fluid Loss During Drilling: N/A gallons

Water Removed During Development: 55 gallons

Static Depth to Water: NM feet below M.P.

Pumping Depth to Water: NM feet below M.P.

Pumping Duration: 1 hours

Yield: NM gpm Date: N/A

Specific Capacity: NM gpm/ft

Well Purpose: Monitoring Well

Remarks: Stickup Completion with Locking Cap

Prepared by: Josh Frizzell

WELL CONSTRUCTION LOG- UNCONSOLIDATED

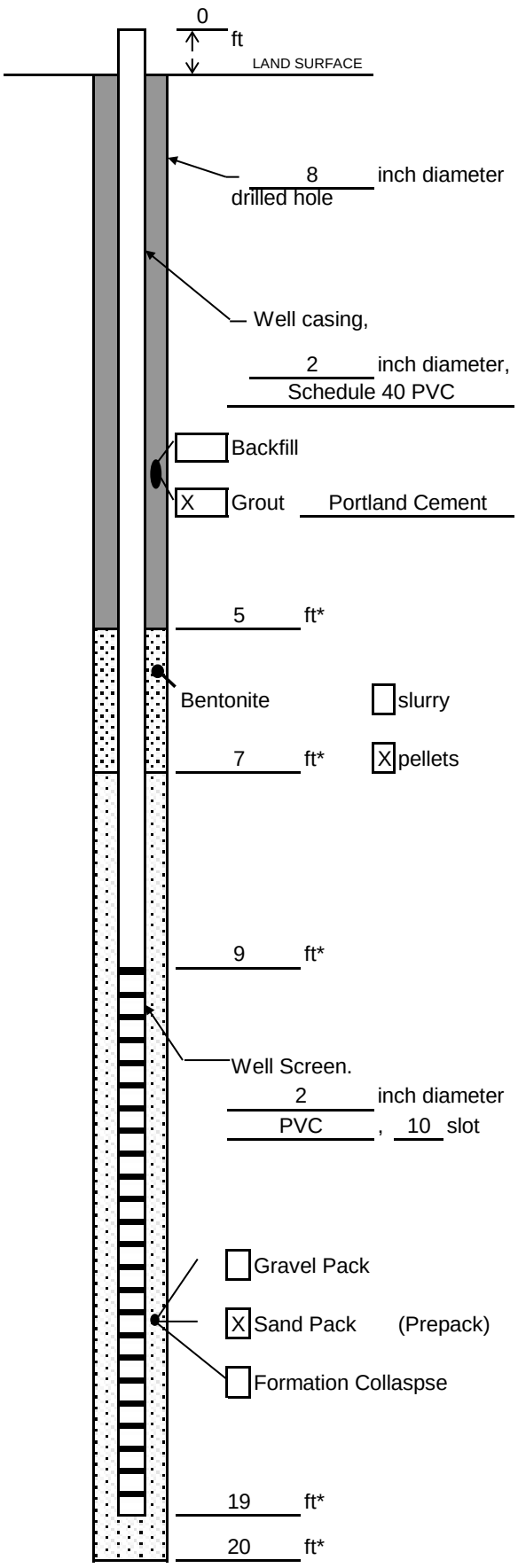

Measuring Point is
Top of Well Casing
Unless Otherwise Noted.

* Depth Below Land Surface
NM = Not Measured

Project: GP09HAFS.F39A.DG0FI Well: G4MW-046

Town/City: Fort Stewart

County: Liberty State: Georgia

Permit No.: N/A

Land-Surface Elevation and Datum:

N/A feet ☐ Surveyed ☐ Estimated

Installation Date(s): 12/9/2010

Drilling Method: Hollow Stem Auger

Drilling Contractor: GeoLab

Drilling Fluid: None

Development Technique(s) and Date(s)

Electric Submersible Pump with Surging, 12/9/2010

Fluid Loss During Drilling: N/A gallons

Water Removed During Development: 55 gallons

Static Depth to Water: NM feet below M.P.

Pumping Depth to Water: NM feet below M.P.

Pumping Duration: 1 hours

Yield: NM gpm Date: N/A

Specific Capacity: NM gpm/ft

Well Purpose: Monitoring Well

Remarks: Flush Mount Manhole Completion with Locking Cap

Prepared by: Josh Frizzell

WELL CONSTRUCTION LOG- UNCONSOLIDATED

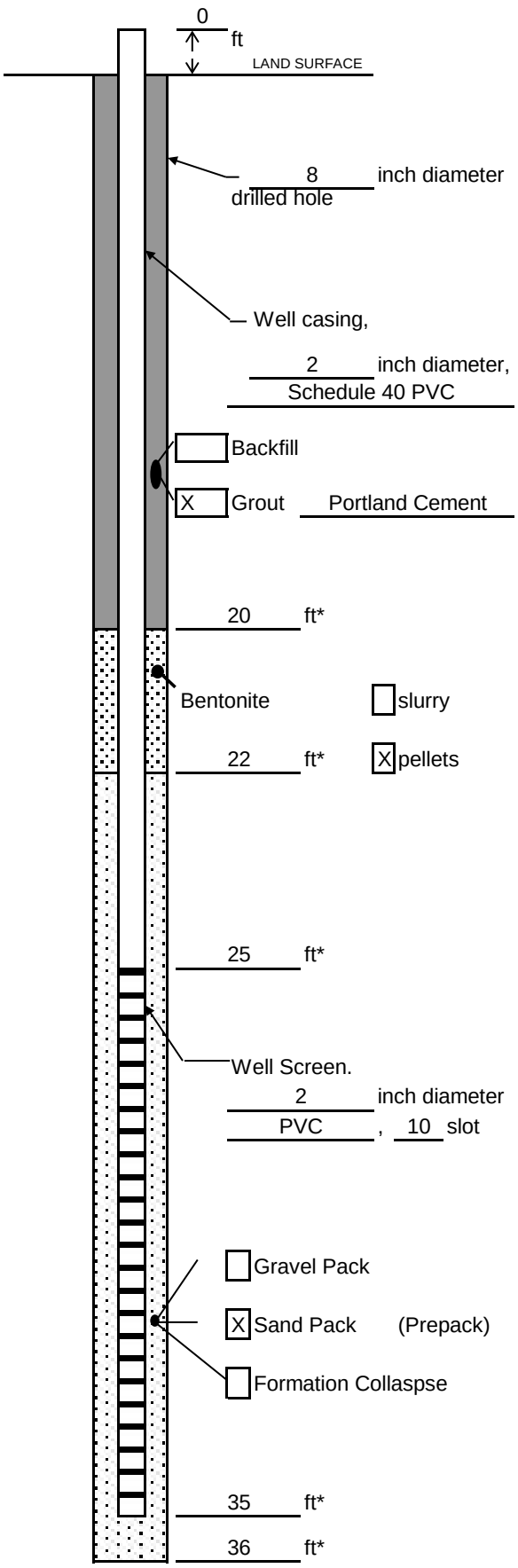

Measuring Point is
Top of Well Casing
Unless Otherwise Noted.

* Depth Below Land Surface
NM = Not Measured

Project: GP09HAFS.F39A.DG0FI Well: G4MW-047

Town/City: Fort Stewart

County: Liberty State: Georgia

Permit No.: N/A

Land-Surface Elevation and Datum:

N/A feet ☐ Surveyed ☐ Estimated

Installation Date(s): 12/9/2010

Drilling Method: Hollow Stem Auger

Drilling Contractor: GeoLab

Drilling Fluid: None

Development Technique(s) and Date(s)

Electric Submersible Pump with Surging, 12/9/2010

Fluid Loss During Drilling: N/A gallons

Water Removed During Development: 55 gallons

Static Depth to Water: NM feet below M.P.

Pumping Depth to Water: NM feet below M.P.

Pumping Duration: 1 hours

Yield: NM gpm Date: N/A

Specific Capacity: NM gpm/ft

Well Purpose: Monitoring Well

Remarks: Flush Mount Manhole Completion with Locking Cap

Prepared by: Josh Frizzell

WELL CONSTRUCTION LOG- UNCONSOLIDATED

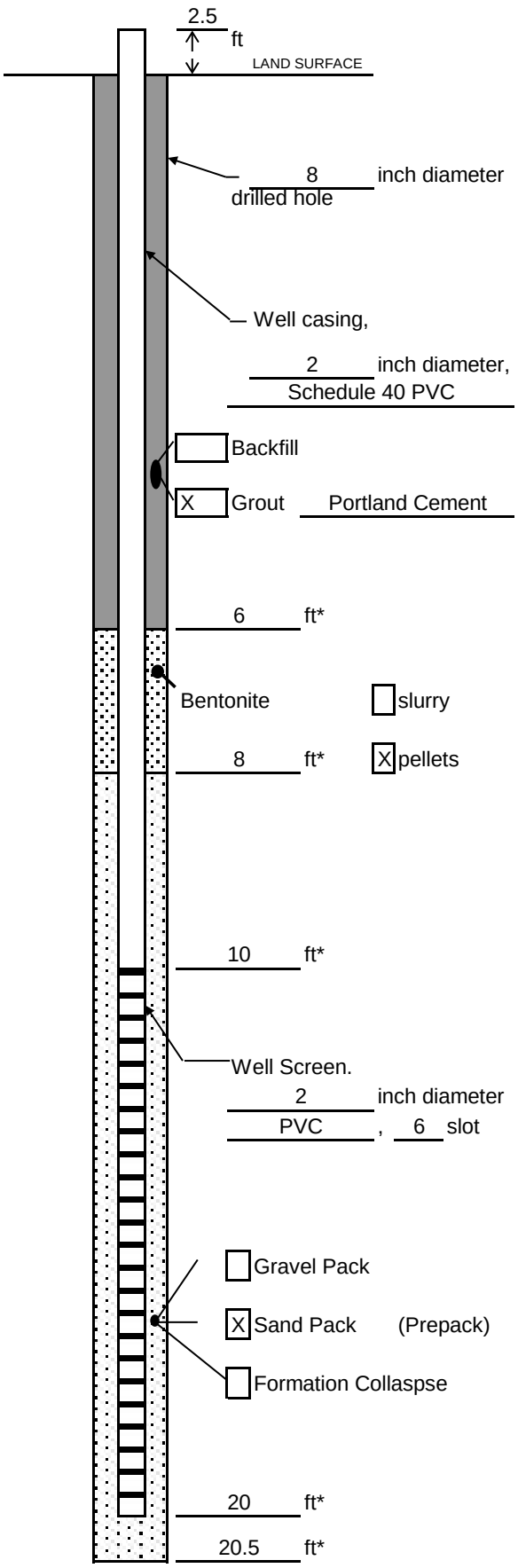

Measuring Point is
Top of Well Casing
Unless Otherwise Noted.

* Depth Below Land Surface
NM = Not Measured

Project GP09HAFS.F39A.DG0FI Well G4MW-048

Town/City Fort Stewart

County Liberty State Georgia

Permit No. N/A

Land-Surface Elevation and Datum:

N/A feet ☐ Surveyed ☐ Estimated

Installation Date(s) 4/22/2011

Drilling Method Hollow Stem Auger

Drilling Contractor ARM

Drilling Fluid None

Development Technique(s) and Date(s)

Electric Submersible Pump with Surging, 5/5/2011

Fluid Loss During Drilling N/A gallons

Water Removed During Development _____ gallons

Static Depth to Water _____ feet below M.P.

Pumping Depth to Water _____ feet below M.P.

Pumping Duration _____ hours

Yield _____ gpm Date 5/5/2011

Specific Capacity _____ gpm/ft

Well Purpose Monitoring Well

Remarks Locking Stickup Completion with Locking Cap

Prepared by Josh Frizzell

WELL CONSTRUCTION LOG- UNCONSOLIDATED

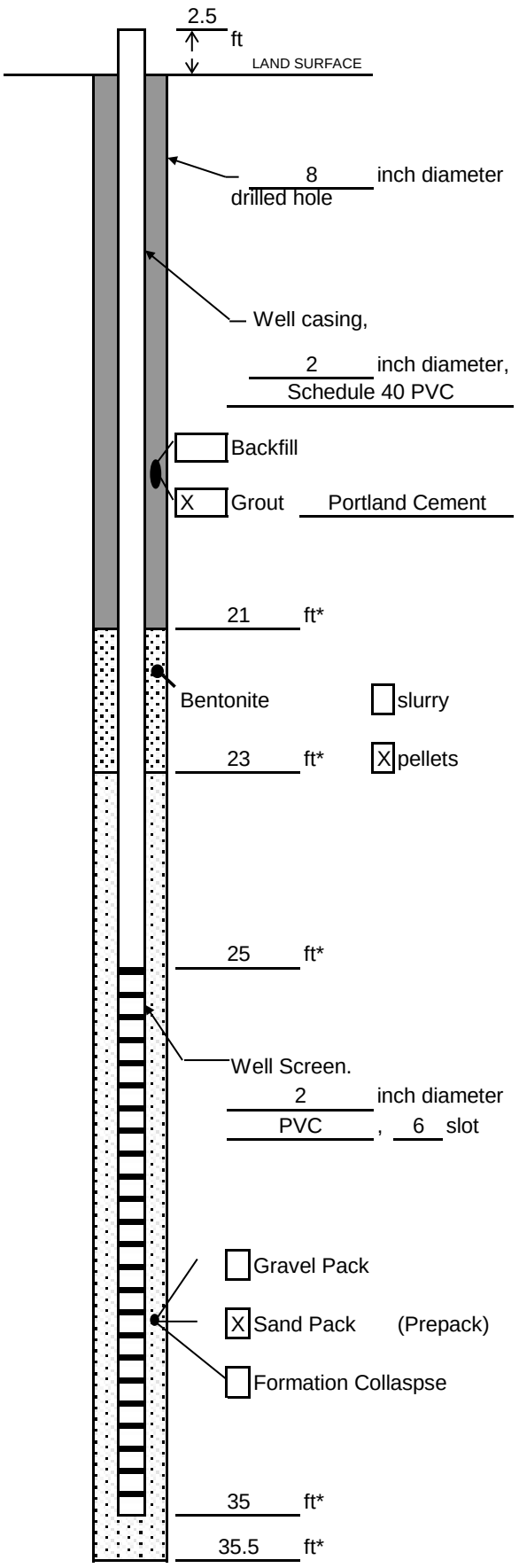

Measuring Point is
Top of Well Casing
Unless Otherwise Noted.

* Depth Below Land Surface
NM = Not Measured

Project: GP09HAFS.F39A.DG0FI Well: G4MW-049

Town/City: Fort Stewart

County: Liberty State: Georgia

Permit No.: N/A

Land-Surface Elevation and Datum:

N/A feet ☐ Surveyed ☐ Estimated

Installation Date(s): 4/26/2011

Drilling Method: Hollow Stem Auger

Drilling Contractor: ARM

Drilling Fluid: None

Development Technique(s) and Date(s)

Electric Submersible Pump with Surging, 4/27/2011

Fluid Loss During Drilling: N/A gallons

Water Removed During Development: 160 gallons

Static Depth to Water: 10.48 feet below M.P.

Pumping Depth to Water: Dry feet below M.P.

Pumping Duration: 3 hours

Yield: NM gpm Date: 5/5/2011

Specific Capacity: NM gpm/ft

Well Purpose: Monitoring Well

Remarks: Locking Stickup Completion with Locking Cap

Prepared by: Josh Frizzell

WELL CONSTRUCTION LOG- UNCONSOLIDATED

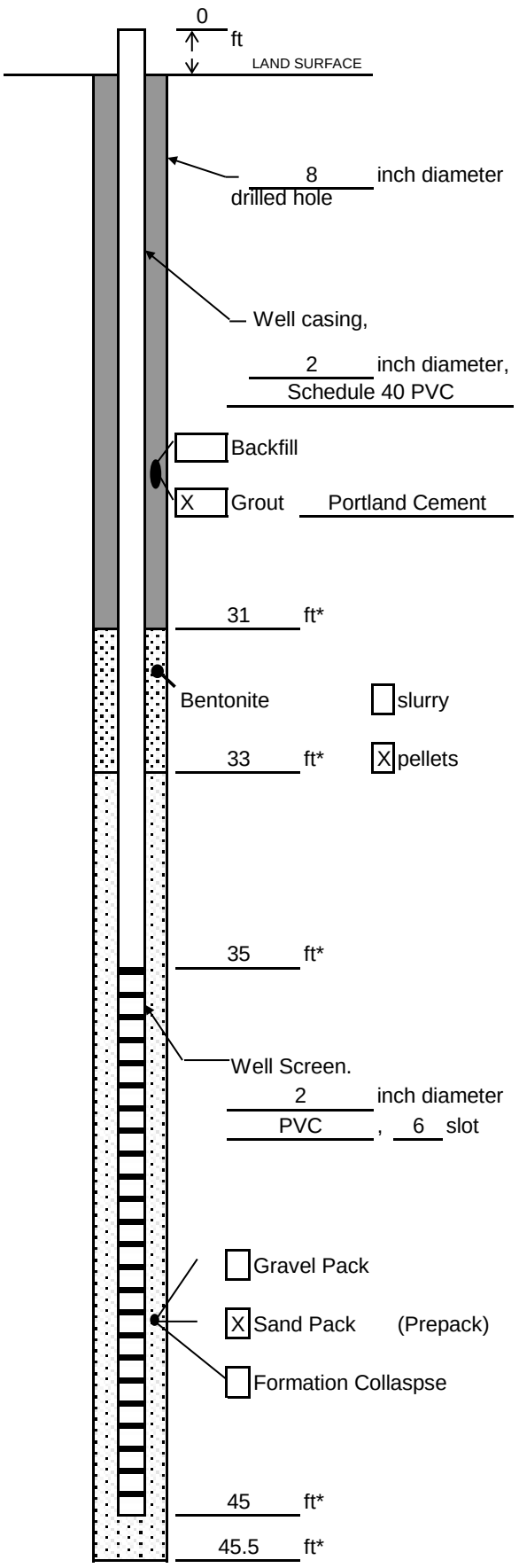

Measuring Point is
Top of Well Casing
Unless Otherwise Noted.

* Depth Below Land Surface
NM = Not Measured

Project: GP09HAFS.F39A.DG0FI Well: G4MW-050

Town/City: Fort Stewart

County: Liberty State: Georgia

Permit No.: N/A

Land-Surface Elevation and Datum:

N/A feet ☐ Surveyed ☐ Estimated

Installation Date(s): 5/4/2011

Drilling Method: Hollow Stem Auger

Drilling Contractor: ARM

Drilling Fluid: None

Development Technique(s) and Date(s)

Electric Submersible Pump with Surging, 5/5/2011

Fluid Loss During Drilling: N/A gallons

Water Removed During Development: 160 gallons

Static Depth to Water: 6.31 feet below M.P.

Pumping Depth to Water: Dry feet below M.P.

Pumping Duration: 3 hours

Yield: NM gpm Date: 5/5/2011

Specific Capacity: NM gpm/ft

Well Purpose: Monitoring Well

Remarks: Flush Mount Manhole Completion with Locking Cap

Prepared by: Josh Frizzell

WELL CONSTRUCTION LOG- UNCONSOLIDATED

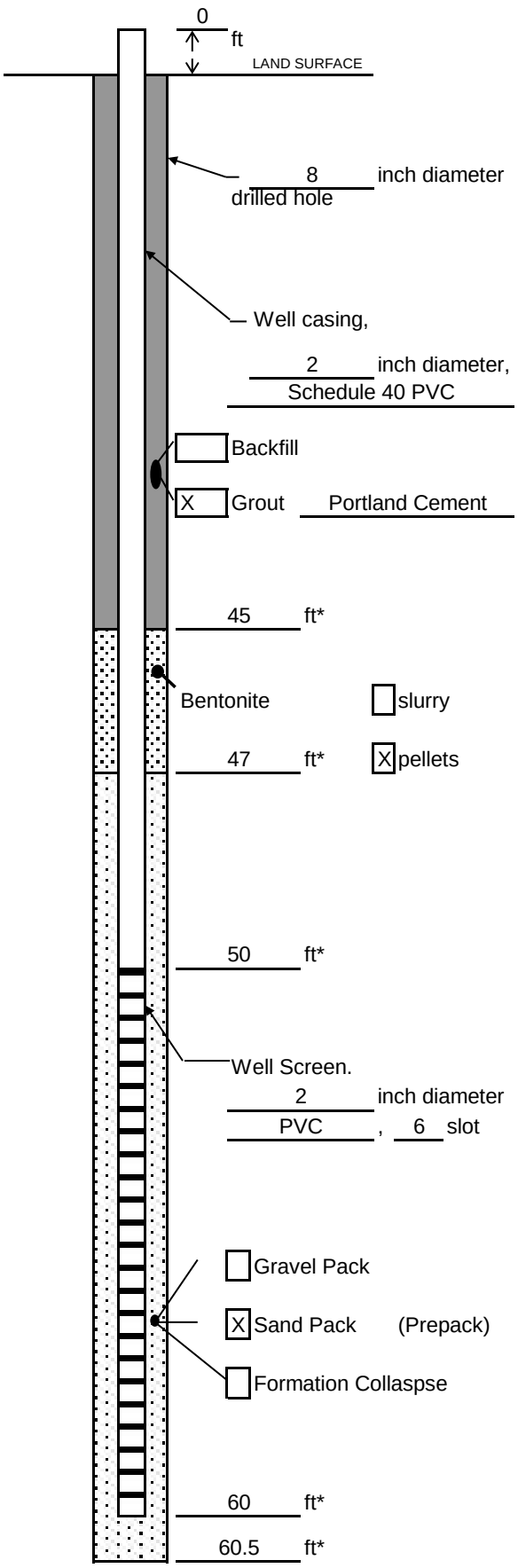

Measuring Point is
Top of Well Casing
Unless Otherwise Noted.

* Depth Below Land Surface
NM = Not Measured

Project: GP09HAFS.F39A.DG0FI Well: G4MW-051

Town/City: Fort Stewart

County: Liberty State: Georgia

Permit No.: N/A

Land-Surface Elevation and Datum:

N/A feet ☐ Surveyed ☐ Estimated

Installation Date(s): 5/4/2011

Drilling Method: Hollow Stem Auger

Drilling Contractor: ARM

Drilling Fluid: None

Development Technique(s) and Date(s)

Electric Submersible Pump with Surging, 5/5/2011

Fluid Loss During Drilling: N/A gallons

Water Removed During Development: 30 gallons

Static Depth to Water: 6.73 feet below M.P.

Pumping Depth to Water: Dry feet below M.P.

Pumping Duration: 2 hours

Yield: NM gpm Date: 5/5/2011

Specific Capacity: NM gpm/ft

Well Purpose: Monitoring Well

Remarks: Flush Mount Manhole Completion with Locking Cap

Prepared by: Josh Frizzell

WELL CONSTRUCTION LOG- UNCONSOLIDATED

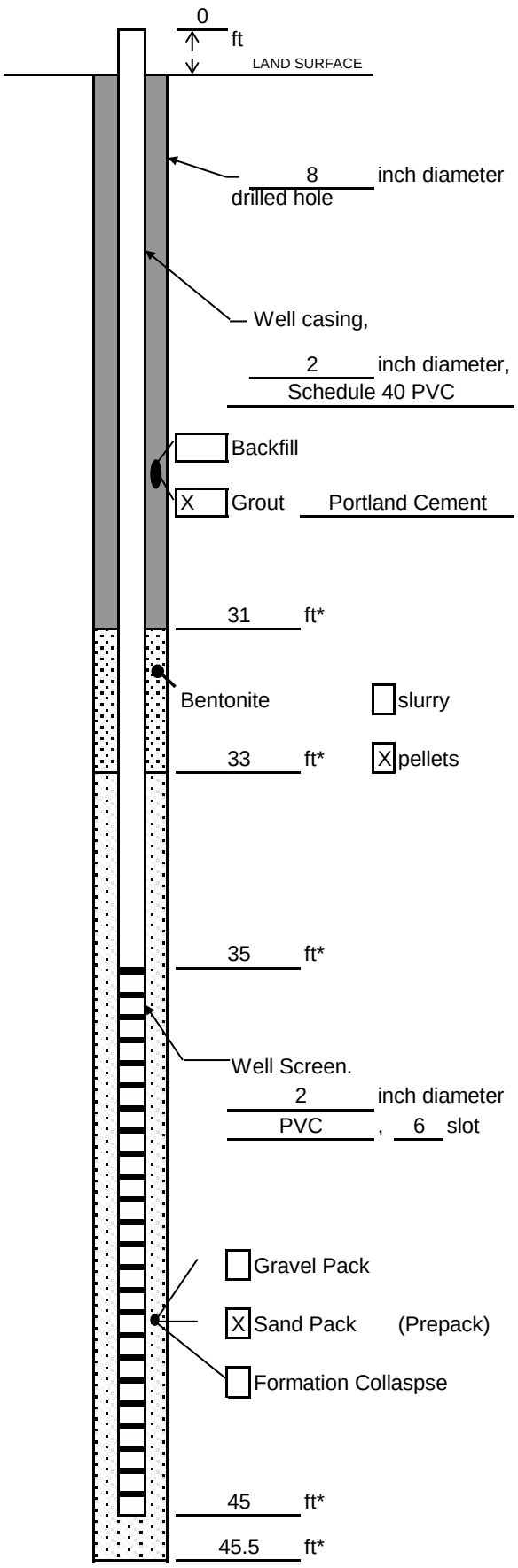

Measuring Point is
Top of Well Casing
Unless Otherwise Noted.

* Depth Below Land Surface
NM = Not Measured

Project: GP09HAFS.F39A.DG0FI Well: G4MW-052

Town/City: Fort Stewart

County: Liberty State: Georgia

Permit No.: N/A

Land-Surface Elevation and Datum:

N/A feet ☐ Surveyed ☐ Estimated

Installation Date(s): 5/3/2011

Drilling Method: Hollow Stem Auger

Drilling Contractor: ARM

Drilling Fluid: None

Development Technique(s) and Date(s)

Electric Submersible Pump with Surging, 5/5/2011

Fluid Loss During Drilling: N/A gallons

Water Removed During Development: 30 gallons

Static Depth to Water: 6.73 feet below M.P.

Pumping Depth to Water: Dry feet below M.P.

Pumping Duration: 2 hours

Yield: NM gpm Date: 5/5/2011

Specific Capacity: NM gpm/ft

Well Purpose: Monitoring Well

Remarks: Flush Mount Manhole Completion with Locking Cap

Prepared by: Josh Frizzell

WELL CONSTRUCTION LOG- UNCONSOLIDATED

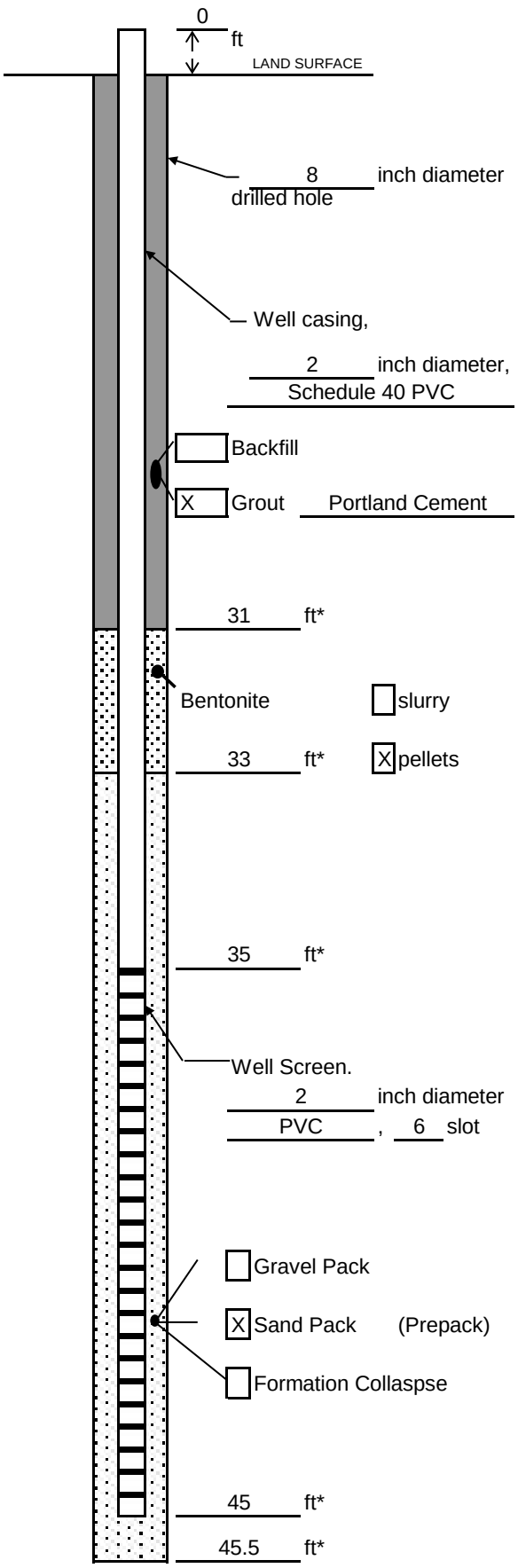

Measuring Point is
Top of Well Casing
Unless Otherwise Noted.

* Depth Below Land Surface
NM = Not Measured

Project GP09HAFS.F39A.DG0FI Well G4MW-053

Town/City Fort Stewart

County Liberty State Georgia

Permit No. N/A

Land-Surface Elevation and Datum:

N/A feet ☐ Surveyed ☐ Estimated

Installation Date(s) 5/2/2011

Drilling Method Hollow Stem Auger

Drilling Contractor ARM

Drilling Fluid None

Development Technique(s) and Date(s)

Electric Submersible Pump with Surging, 5/5/2011

Fluid Loss During Drilling N/A gallons

Water Removed During Development _____ gallons

Static Depth to Water _____ feet below M.P.

Pumping Depth to Water _____ feet below M.P.

Pumping Duration _____ hours

Yield _____ gpm Date 5/5/2011

Specific Capacity _____ gpm/ft

Well Purpose Monitoring Well

Remarks Flush Mount Manhole Completion with Locking Cap

Prepared by Josh Frizzell

WELL CONSTRUCTION LOG- UNCONSOLIDATED

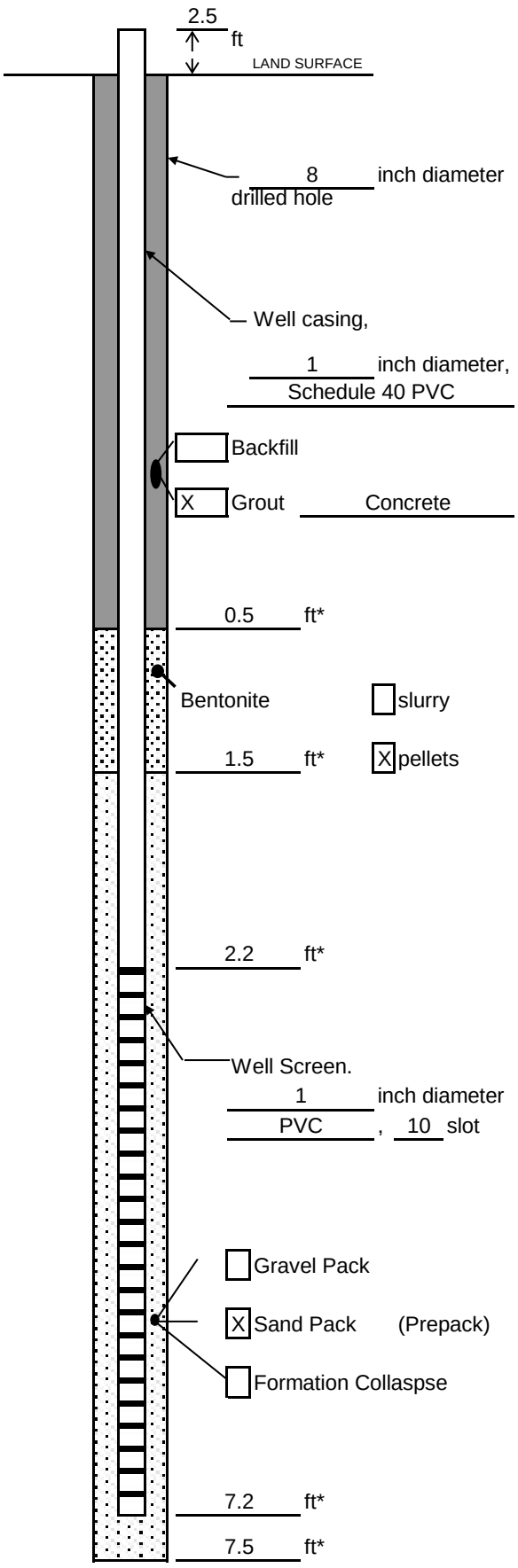

Measuring Point is
Top of Well Casing
Unless Otherwise Noted.

* Depth Below Land Surface
NM = Not Measured

Project: GP09HAFS.F39A.DG0FI Well: G4MW-054

Town/City: Fort Stewart

County: Liberty State: Georgia

Permit No.: N/A

Land-Surface Elevation and Datum:

N/A feet ☐ Surveyed ☐ Estimated

Installation Date(s): 5/2/2011

Drilling Method: Hollow Stem Auger

Drilling Contractor: ARM

Drilling Fluid: None

Development Technique(s) and Date(s)

Electric Submersible Pump with Surging, 5/5/2011

Fluid Loss During Drilling: N/A gallons

Water Removed During Development: 3 gallons

Static Depth to Water: 7.87 feet below M.P.

Pumping Depth to Water: Dry feet below M.P.

Pumping Duration: 2 hours

Yield: NM gpm Date: 5/5/2011

Specific Capacity: _____ gpm/ft

Well Purpose: Monitoring Well

Remarks: Locking Stickup Completion with Locking Cap

Prepared by: Josh Frizzell

Appendix C

Groundwater Sampling Logs

ARCADIS

Groundwater Sampling Form

Project No. GP09HAFS.F39A.DG0FI Well ID G4MW006 Date 3/12/2010

Project Name/Location Hunter Stewart / Ft. Stewart, GA Weather Overcast, 65°

Measuring Pt. Description TOC Screen Setting (ft-bmp) 5 - 15 Casing Diameter (in.) 1" Well Material X PVC / SS / Other

Total Depth (ft-bmp) 15 Static Water Level (ft-bmp) 4.72 Water Column 10.28 Gallons in Well 0.41

Calc. Gallons Purged Pump Intake (ft-bmp) 10' Purge Method: PDB / Bladder / Disp. Bailer / Peristaltic X Sample Method Purge 5 Well Volumes

Gallons Purged 2.5 MP Elevation Pump On/Off 0750 / 0818

Sample Time: Label 0815 Replicate/Code No. Sampled by R. Shealy

Time	Minutes Elapsed	Gallons Purged	Depth to Water (ft)	Temp. (°C)	Cond. (mS/cm)	Dissolved Oxygen (mg/L)	pH	ORP (mV)	Rate (mL/min)	Appearance	
										Color	Odor
0754	0	0	5.98	17.13	0.174	2.19	5.44	18.0	215	Clear	None
0815	21	2.5	---	18.49	0.183	0.56	5.18	-0.2	---	Clear	None

Constituents Sampled	Container	Number	Preservative
VOCs	40 mL VOAs	3	HCl

Well Information

Well Location:	See map	Well Locked at Arrival:	No
Condition of Well:	OK	Well Locked at Departure:	No
Well Completion:	Flush Mount	Key Number To Well:	---

NOTES: 0756 - turned up pump speed to purge 5 well volumes

0815 - purged 2.5 gallons

Well Casing Volumes

Gallons/Foot				
	1" = 0.04	1.5" = 0.09	2.5" = 0.26	6" = 1.47
	1.25" = 0.06	2" = 0.16	3" = 0.37	

ARCADIS

Groundwater Sampling Form

Project No. GP09HAFS.F39A.DG0FI | Well ID G4MW010 | Date 3/12/2010

Project Name/Location Hunter Stewart / Ft. Stewart, GA | Weather Overcast

Measuring Pt. Description TOC | Screen Setting (ft-bmp) 5 - 15 | Casing Diameter (in.) 2" | Well Material X PVC / SS / Other

Total Depth (ft-bmp) 15 | Static Water Level (ft-bmp) 4.48 | Water Column 10.52 | Gallons in Well

Calc. Gallons Purged | Pump Intake (ft-bmp) 10' | Purge Method: PDB / Bladder / Disp. Bailer / Peristaltic X | Sample Method Low Flow

Gallons Purged | MP Elevation | Pump On/Off 0858

Sample Time: Label 0947 | Replicate/Code No. | Sampled by R. Shealy

Time	Minutes Elapsed	Gallons Purged	Depth to Water (ft)	Temp. (°C)	Cond. (mS/cm)	Dissolved Oxygen (mg/L)	pH	ORP (mV)	Rate (mL/min)	Appearance	
										Color	Odor
0905	4	0.2	4.66	17.52	0.363	1.14	6.06	-21.2	255	Greenish yellow	None
0922	21	1.3	4.65	17.57	0.353	0.34	6.02	-37.2	230	Greenish yellow	None
0927	26	1.6	4.65	17.61	0.342	0.30	6.00	-37.6	230	Greenish yellow	None
0932	31	1.9	4.65	17.61	0.335	0.27	5.99	-43.8	230	Greenish yellow	None
0937	36	2.2	4.65	17.62	0.333	0.25	5.99	-41.9	230	Greenish yellow	None
0942	41	2.5	4.65	17.62	0.331	0.25	5.98	-44.1	230	Greenish yellow	None
0947	46	2.8	4.65	17.62	0.329	0.24	5.98	-46.1	230	Greenish yellow	None

Constituents Sampled	Container	Number	Preservative
VOCs	40 mL VOAs	3	HCl

Well Information

Well Location:	See map	Well Locked at Arrival:	No
Condition of Well:	OK	Well Locked at Departure:	No
Well Completion:	Flush Mount	Key Number To Well:	---

NOTES: Slowed pump at 0908

Well Casing Volumes

Gallons/Foot				
	1" = 0.04	1.5" = 0.09	2.5" = 0.26	6" = 1.47
	1.25" = 0.06	2" = 0.16	3" = 0.37	

ARCADIS

Groundwater Sampling Form

Project No. GP09HAFS.F39A.DG0FI Well ID G4MW011 Date 3/11/2010

Project Name/Location Hunter Stewart / Ft. Stewart, GA Weather Hard Rain, 65°

Measuring Pt. Description TOC Screen Setting (ft-bmp) 5 - 15 Casing Diameter (in.) 2" Well Material X PVC / SS / Other

Total Depth (ft-bmp) Static Water Level (ft-bmp) 5.34 Water Column Gallons in Well

Calc. Gallons Purged Pump Intake (ft-bmp) 10' Purge Method: PDB / Bladder / Disp. Bailer / Peristaltic X Sample Method Low Flow

Gallons Purged MP Elevation Pump On/Off 1437 / 1518

Sample Time: Label 1515 Replicate/Code No. Sampled by R. Shealy

Time	Minutes Elapsed	Gallons Purged	Depth to Water (ft)	Temp. (°C)	Cond. (mS/cm)	Dissolved Oxygen (mg/L)	pH	ORP (mV)	Rate (mL/min)	Appearance	
										Color	Odor
1440	0	0	5.60	16.38	0.250	4.02	5.76	27.1	200	Clear	None
1500	20	1.2	5.65	16.26	0.239	0.62	5.62	9.4	220	Clear	None
1505	25	1.5	5.66	16.28	0.235	0.89	5.60	8.0	220	Clear	None
1510	30	1.7	5.67	16.28	0.232	0.85	5.58	5.7	220	Clear	None
1515	35	2.0	5.67	16.24	0.231	0.86	5.58	4.0	220	Clear	None

Constituents Sampled	Container	Number	Preservative
VOCs	40 mL VOAs	3	HCl

Well Information

Well Location:	See map	Well Locked at Arrival:	No
Condition of Well:	OK	Well Locked at Departure:	No
Well Completion:	Flush Mount	Key Number To Well:	---

NOTES:

Well Casing Volumes

Gallons/Foot	1" = 0.04	1.5" = 0.09	2.5" = 0.26	6" = 1.47
	1.25" = 0.06	2" = 0.16	3" = 0.37	

ARCADIS

Groundwater Sampling Form

Project No. GP09HAFS.F39A.DG0FI Well ID G4MW016 Date 3/10/2010

Project Name/Location Hunter Stewart / Ft. Stewart, GA Weather Cloudy, 70°

Measuring Pt. Description TOC Screen Setting (ft-bmp) 3 - 13 Casing Diameter (in.) 1" Well Material X PVC / ___ SS / ___ Other

Total Depth (ft-bmp) ___ Static Water Level (ft-bmp) 3.79 Water Column ___ Gallons in Well ___

Calc. Gallons Purged ___ Pump Intake (ft-bmp) 8' Purge Method: ___ Sample Method Low Flow

Gallons Purged 1.9 MP Elevation ___ PDB ___ / Bladder ___ / Disp. Bailer ___ / Peristaltic X Pump On/Off 1147 / 1224

Sample Time: Label 1222 Replicate/Code No. ___ Sampled by R. Shealy

Time	Minutes Elapsed	Gallons Purged	Depth to Water (ft)	Temp. (°C)	Cond. (mS/cm)	Dissolved Oxygen (mg/L)	pH	ORP (mV)	Rate (mL/min)	Appearance	
										Color	Odor
1153	3	0.1	4.57	15.62	0.208	1.76	4.18	83.4	210	Brown	Swampy
1202	15	0.8	4.57	15.73	0.210	0.50	4.16	83.4	210	Clear	Swampy
1207	20	1.0	4.57	15.59	0.210	0.40	4.16	80.9	210	Clear	Swampy
1212	25	1.3	4.57	15.52	0.210	0.32	4.15	78.7	210	Clear	Swampy
1217	30	1.5	4.57	15.64	0.210	0.30	4.15	75.4	210	Clear	Swampy
1222	35	1.7	4.57	15.65	0.210	0.30	4.16	74.1	210	Clear	Swampy

Constituents Sampled	Container	Number	Preservative
VOCs	40 mL VOAs	3	HCl

Well Information

Well Location:	See map	Well Locked at Arrival:	No
Condition of Well:	OK	Well Locked at Departure:	No
Well Completion:	Flush Mount	Key Number To Well:	---

NOTES:

Well Casing Volumes

Gallons/Foot	1" = 0.04	1.5" = 0.09	2.5" = 0.26	6" = 1.47
	1.25" = 0.06	2" = 0.16	3" = 0.37	

ARCADIS

Groundwater Sampling Form

Project No. GP09HAFS.F39A.DG0FI | Well ID G4MW017 | Date 3/10/2010

Project Name/Location Hunter Stewart / Ft. Stewart, GA | Weather Cloudy, 70°

Measuring Pt. Description TOC | Screen Setting (ft-bmp) | Casing Diameter (in.) 1" | Well Material X PVC / SS / Other

Total Depth (ft-bmp) 8.27 | Static Water Level (ft-bmp) 4.74 | Water Column | Gallons in Well

Calc. Gallons Purged | Pump Intake (ft-bmp) | Purge Method: PDB / Bladder / Disp. Bailer / Peristaltic X | Sample Method Purged dry

Gallons Purged 0.4 | MP Elevation | Pump On/Off 1229 / 1238

Sample Time: Label 1250 | Replicate/Code No. | Sampled by R. Shealy

Time	Minutes Elapsed	Gallons Purged	Depth to Water (ft)	Temp. (°C)	Cond. (mS/cm)	Dissolved Oxygen (mg/L)	pH	ORP (mV)	Rate (mL/min)	Appearance	
										Color	Odor
1231	0	0	6.65	14.09	0.107	3.42	5.60	76.0	---	Clear	None
1250	---	0.4	---	15.27	0.149	3.53	5.67	43.1	---	Clear	None

Constituents Sampled	Container	Number	Preservative
VOCs	40 mL VOAs	3	HCl

Well Information

Well Location:	See map	Well Locked at Arrival:	No
Condition of Well:	OK	Well Locked at Departure:	No
Well Completion:	Flush Mount	Key Number To Well:	---

NOTES: Poor recharge. Attempt to pump dry at 1234

Well is only 8.27' deep btoc, 8.42' bgs

Purged dry at 1238, allowed to recharge, sampled at 1250

Well Casing Volumes

Gallons/Foot	1" = 0.04	1.5" = 0.09	2.5" = 0.26	6" = 1.47
	1.25" = 0.06	2" = 0.16	3" = 0.37	

ARCADIS

Groundwater Sampling Form

Project No. GP09HAFS.F39A.DG0FI Well ID G4MW018 Date 3/12/2010

Project Name/Location Hunter Stewart / Ft. Stewart, GA Weather Overcast, 65°

Measuring Pt. Description TOC Screen Setting (ft-bmp) 2 - 12 Casing Diameter (in.) 1" Well Material X PVC / SS / Other

Total Depth (ft-bmp) 12 Static Water Level (ft-bmp) 3.91 Water Column Gallons in Well 0.323

Calc. Gallons Purged Pump Intake (ft-bmp) 7 Purge Method: Sample Method Purge 5 Well Volumes

Gallons Purged 1.8 MP Elevation PDB Bladder Disp. Bailer Peristaltic X Pump On/Off 0825

Sample Time: Label 0842 Replicate/Code No. Sampled by R. Shealy

Time	Minutes Elapsed	Gallons Purged	Depth to Water (ft)	Temp. (°C)	Cond. (mS/cm)	Dissolved Oxygen (mg/L)	pH	ORP (mV)	Rate (mL/min)	Appearance	
										Color	Odor
0842		1.8	---	17.95	0.164	1.48	4.27	53.8	---	Clear	Swampy

Constituents Sampled	Container	Number	Preservative
VOCs	40 mL VOAs	3	HCl

Well Information

Well Location:	See map	Well Locked at Arrival:	No
Condition of Well:	OK	Well Locked at Departure:	No
Well Completion:	Flush Mount	Key Number To Well:	---

NOTES: Pulled some sediment from bottom,
At 0842 purged 1.8 gallons from well

Well Casing Volumes

Gallons/Foot	1" = 0.04	1.5" = 0.09	2.5" = 0.26	6" = 1.47
	1.25" = 0.06	2" = 0.16	3" = 0.37	

ARCADIS

Groundwater Sampling Form

Project No. GP09HAFS.F39A.DG0FI | Well ID G4MW019 | Date 3/10/2010

Project Name/Location Hunter Stewart / Ft. Stewart, GA | Weather Overcast, 65°

Measuring Pt. Description TOC | Screen Setting (ft-bmp) 2 - 12 | Casing Diameter (in.) 1" | Well Material X PVC, ___ SS, ___ Other

Total Depth (ft-bmp) 12 | Static Water Level (ft-bmp) 3.94 | Water Column 8' | Gallons in Well

Calc. Gallons Purged | Pump Intake (ft-bmp) 8 | Purge Method: PDB, Bladder, Disp. Bailer, Peristaltic X | Sample Method Low Flow

Gallons Purged ~2.0 | MP Elevation | Pump On/Off 0806 / 0855

Sample Time: Label 0853 | Replicate/Code No. | Sampled by R. Shealy

Time	Minutes Elapsed	Gallons Purged	Depth to Water (ft)	Temp. (°C)	Cond. (mS/cm)	Dissolved Oxygen (mg/L)	pH	ORP (mV)	Rate (mL/min)	Appearance	
										Color	Odor
0809	0	0	5.02	16.60	0.269	2.68	6.05	-15.8	---	Clear	None
0828	19	0.5	5.25	18.14	0.222	1.68	5.92	-23.2	180	Clear	None
0833	24	0.8	5.35	18.32	0.220	1.08	5.89	-26.5	180	Clear	None
0838	29	1.0	5.23	18.42	0.220	0.71	5.86	-33.8	160	Clear	None
0843	34	1.3	5.24	18.48	0.218	0.57	5.86	-36.0	160	Clear	None
0848	39	1.5	5.24	18.58	0.217	0.55	5.84	-36.9	160	Clear	None
0853	44	1.7	5.24	18.59	0.217	0.52	5.82	-36.0	160	Clear	None

Constituents Sampled	Container	Number	Preservative
VOCs	40 mL VOAs	3	HCl

Well Information

Well Location:	See map	Well Locked at Arrival:	No
Condition of Well:	OK	Well Locked at Departure:	No
Well Completion:	Flush Mount	Key Number To Well:	---

NOTES: At 0833 slowed pump to 160 mL/min

Well Casing Volumes

Gallons/Foot	1" = 0.04	1.5" = 0.09	2.5" = 0.26	6" = 1.47
	1.25" = 0.06	2" = 0.16	3" = 0.37	

ARCADIS

Groundwater Sampling Form

Project No. GP09HAFS.F39A.DG0FI | Well ID G4MW020 | Date 3/10/2010

Project Name/Location Hunter Stewart / Ft. Stewart, GA | Weather Cloudy, 65°

Measuring Pt. Description TOC | Screen Setting (ft-bmp) 2 - 12 | Casing Diameter (in.) 1" | Well Material X PVC, ___ SS, ___ Other

Total Depth (ft-bmp) 12 | Static Water Level (ft-bmp) 3.82 | Water Column 8' | Gallons in Well

Calc. Gallons Purged | Pump Intake (ft-bmp) 7 | Purge Method: PDB, Bladder, Disp. Bailer, Peristaltic X | Sample Method Low Flow

Gallons Purged 2.2 | MP Elevation | Pump On/Off 0905 / 0953

Sample Time: Label 0950 | Replicate/Code No. | Sampled by R. Shealy

Time	Minutes Elapsed	Gallons Purged	Depth to Water (ft)	Temp. (°C)	Cond. (mS/cm)	Dissolved Oxygen (mg/L)	pH	ORP (mV)	Rate (mL/min)	Appearance	
										Color	Odor
0910	0	0	4.18	17.59	0.241	3.02	6.08	-35.8	238	Clear	None
0940	30	1.5	4.16	17.96	0.245	0.29	6.05	-62.8	180	Clear	None
0945	35	1.7	4.15	17.88	0.244	0.30	6.05	-62.6	180	Clear	None
0950	40	1.9	4.15	17.87	0.244	0.30	6.05	-62.9	180	Clear	None

Constituents Sampled	Container	Number	Preservative
VOCs	40 mL VOAs	3	HCl

Well Information

Well Location:	See map	Well Locked at Arrival:	No
Condition of Well:	OK	Well Locked at Departure:	No
Well Completion:	Flush Mount	Key Number To Well:	---

NOTES: Slowed pump rate at 0910

Well Casing Volumes

Gallons/Foot	1" = 0.04	1.5" = 0.09	2.5" = 0.26	6" = 1.47
	1.25" = 0.06	2" = 0.16	3" = 0.37	

ARCADIS

Groundwater Sampling Form

Project No. GP09HAFS.F39A.DG0FI Well ID G4MW023 Date 3/10/2010

Project Name/Location Hunter Stewart / Ft. Stewart, GA Weather Partly Cloudy, 70°

Measuring Pt. Description TOC Screen Setting (ft-bmp) 5 - 15 Casing Diameter (in.) 2" Well Material X PVC / SS / Other

Total Depth (ft-bmp) Static Water Level (ft-bmp) 7.36 Water Column 8' Gallons in Well

Calc. Gallons Purged Pump Intake (ft-bmp) Purge Method: PDB / Bladder / Disp. Bailer / Peristaltic X Sample Method Low Flow

Gallons Purged 1.8 MP Elevation Pump On/Off 1029 / 1107

Sample Time: Label 1105 Replicate/Code No. Sampled by R. Shealy

Time	Minutes Elapsed	Gallons Purged	Depth to Water (ft)	Temp. (°C)	Cond. (mS/cm)	Dissolved Oxygen (mg/L)	pH	ORP (mV)	Rate (mL/min)	Appearance	
										Color	Odor
1030	0	0	7.92	16.68	0.119	2.81	6.17	6.9	180	Clear	None
1050	20	1.0	8.01	15.52	0.115	0.70	6.00	49.7	210	Clear	None
1055	25	1.3	8.02	15.4	0.115	0.54	6.00	54.0	210	Clear	None
1100	30	1.5	8.02	15.35	0.115	0.54	6.00	55.4	210	Clear	None
1105	35	1.8	8.02	15.44	0.115	0.51	6.00	57.4	210	Clear	None

Constituents Sampled	Container	Number	Preservative
VOCs	40 mL VOAs	3	HCl

Well Information

Well Location:	See map	Well Locked at Arrival:	No
Condition of Well:	OK	Well Locked at Departure:	No
Well Completion:	Stick Up	Key Number To Well:	---

NOTES: Increased pump speed at 1032

Well Casing Volumes

Gallons/Foot	1" = 0.04	1.5" = 0.09	2.5" = 0.26	6" = 1.47
	1.25" = 0.06	2" = 0.16	3" = 0.37	

ARCADIS

Groundwater Sampling Form

Project No. GP09HAFS.F39A.DG0FI | Well ID G4MW024 | Date 3/10/2010

Project Name/Location Hunter Stewart / Ft. Stewart, GA | Weather Rainy, 65°

Measuring Pt. Description TOC | Screen Setting (ft-bmp) 5 - 15 | Casing Diameter (in.) 2" | Well Material X PVC / SS / Other

Total Depth (ft-bmp) | Static Water Level (ft-bmp) 5.45 | Water Column | Gallons in Well

Calc. Gallons Purged | Pump Intake (ft-bmp) 10 | Purge Method: PDB / Bladder / Disp. Bailer / Peristaltic X | Sample Method Low Flow

Gallons Purged 2.0 | MP Elevation | Pump On/Off 1402 / 1442

Sample Time: Label 1440 | Replicate/Code No. | Sampled by R. Shealy

Time	Minutes Elapsed	Gallons Purged	Depth to Water (ft)	Temp. (°C)	Cond. (mS/cm)	Dissolved Oxygen (mg/L)	pH	ORP (mV)	Rate (mL/min)	Appearance	
										Color	Odor
1405	0	0	5.56	18.40	0.813	0.62	6.37	-49.7	200	Greenish yellow	None
1425	20	1.2	5.62	18.49	0.735	0.25	6.38	-64.3	210	Greenish yellow	None
1430	25	1.4	5.62	18.53	0.703	0.21	6.38	-68.4	210	Greenish yellow	None
1435	30	1.6	5.62	18.52	0.692	0.20	6.37	-69.6	210	Greenish yellow	None
1440	35	1.8	5.62	18.53	0.685	0.19	6.37	-73.0	210	Greenish yellow	None

Constituents Sampled	Container	Number	Preservative
VOCs	40 mL VOAs	9	HCl

Well Information

Well Location:	See map	Well Locked at Arrival:	No
Condition of Well:	OK	Well Locked at Departure:	No
Well Completion:	Flush Mount	Key Number To Well:	---

NOTES: MS/MSD Collected: G4MW024(031010)MS/MSD

Well Casing Volumes

Gallons/Foot				
	1" = 0.04	1.5" = 0.09	2.5" = 0.26	6" = 1.47
	1.25" = 0.06	2" = 0.16	3" = 0.37	

ARCADIS

Groundwater Sampling Form

Project No. GP09HAFS.F39A.DG0FI Well ID G4MW025 Date 3/10/2010

Project Name/Location Hunter Stewart / Ft. Stewart, GA Weather Partly Cloudy, 70°

Measuring Pt. Description TOC Screen Setting (ft-bmp) 3 - 13 Casing Diameter (in.) 2" Well Material X PVC / SS / Other

Total Depth (ft-bmp) Static Water Level (ft-bmp) 3.93 Water Column Gallons in Well

Calc. Gallons Purged Pump Intake (ft-bmp) 8 Purge Method: PDB / Bladder / Disp. Bailer / Peristaltic X Sample Method Low Flow

Gallons Purged MP Elevation Pump On/Off 1319 / 1353

Sample Time: Label 1351 Replicate/Code No. Sampled by R. Shealy

Time	Minutes Elapsed	Gallons Purged	Depth to Water (ft)	Temp. (°C)	Cond. (mS/cm)	Dissolved Oxygen (mg/L)	pH	ORP (mV)	Rate (mL/min)	Appearance	
										Color	Odor
1321	0	0	4.17	18.07	0.155	1.96	4.37	45.5	230	Clear	None
1336	15	0.9	4.29	17.29	0.153	0.39	4.33	46.4	200	Clear	None
1341	20	1.1	4.31	17.14	0.153	0.37	4.32	43.6	200	Clear	None
1346	25	1.4	4.32	17.07	0.153	0.35	4.31	41.0	200	Clear	None
1351	30	1.6	4.32	17.05	0.153	0.34	4.31	40.5	200	Clear	None

Constituents Sampled	Container	Number	Preservative
VOCs	40 mL VOAs	9	HCl

Well Information

Well Location:	See map	Well Locked at Arrival:	No
Condition of Well:	OK	Well Locked at Departure:	No
Well Completion:	Flush Mount	Key Number To Well:	---

NOTES: Slowed pump at 1324

Well Casing Volumes

Gallons/Foot	1" = 0.04	1.5" = 0.09	2.5" = 0.26	6" = 1.47
	1.25" = 0.06	2" = 0.16	3" = 0.37	

ARCADIS

Groundwater Sampling Form

Project No. GP09HAFS.F39A.DG0FI | Well ID G4MW027 | Date 3/11/2010

Project Name/Location Hunter Stewart / Ft. Stewart, GA | Weather Overcast, 65°

Measuring Pt. Description TOC | Screen Setting (ft-bmp) 10 - 20 | Casing Diameter (in.) 2" | Well Material X PVC, ___ SS, ___ Other

Total Depth (ft-bmp) ___ | Static Water Level (ft-bmp) 3.98 | Water Column ___ | Gallons in Well ___

Calc. Gallons Purged ___ | Pump Intake (ft-bmp) 15 | Purge Method: ___ | Sample Method Low Flow

Gallons Purged 2.2 | MP Elevation ___ | PDB ___ | Bladder ___ | Disp. Bailer ___ | Peristaltic X | Pump On/Off 0816 / 0901

Sample Time: Label 0859 | Replicate/Code No. Dup-5(031110) | Sampled by R. Shealy

Time	Minutes Elapsed	Gallons Purged	Depth to Water (ft)	Temp. (°C)	Cond. (mS/cm)	Dissolved Oxygen (mg/L)	pH	ORP (mV)	Rate (mL/min)	Appearance	
										Color	Odor
0819	0	0	4.43	16.60	0.056	5.54	5.62	127.3	240	Clear brownish	None
0839	20	1.0	4.38	16.58	0.053	1.80	5.47	147.0	205	Clear brownish	None
0844	25	1.3	4.38	16.64	0.053	1.54	5.41	145.7	205	Clear brownish	None
0849	30	1.5	4.38	16.65	0.053	1.42	5.38	143.4	205	Clear brownish	None
0854	35	1.7	4.38	16.69	0.053	1.35	5.36	140.0	205	Clear brownish	None
0859	40	2.0	4.38	16.67	0.053	1.30	5.35	138.2	205	Clear brownish	None

Constituents Sampled	Container	Number	Preservative
VOCs	40 mL VOAs	6	HCl

Well Information

Well Location:	See map	Well Locked at Arrival:	Yes
Condition of Well:	OK	Well Locked at Departure:	Yes
Well Completion:	Flush Mount	Key Number To Well:	---

NOTES: Slowed pump rate at 0821

Collected Duplicate: Dup-5(031110), Time 0700

Began raining at 0839

Well Casing Volumes

Gallons/Foot	1" = 0.04	1.5" = 0.09	2.5" = 0.26	6" = 1.47
	1.25" = 0.06	2" = 0.16	3" = 0.37	

ARCADIS

Groundwater Sampling Form

Project No. GP09HAFS.F39A.DG0FI Well ID G4MW028 Date 3/11/2010

Project Name/Location Hunter Stewart / Ft. Stewart, GA Weather Rain, 65°

Measuring Pt. Description TOC Screen Setting (ft-bmp) 9 - 19 Casing Diameter (in.) 2" Well Material X PVC / SS / Other

Total Depth (ft-bmp) Static Water Level (ft-bmp) 3.46 Water Column Gallons in Well

Calc. Gallons Purged Pump Intake (ft-bmp) Purge Method: Sample Method Low Flow

Gallons Purged MP Elevation PDB / Bladder / Disp. Bailer / Peristaltic X Pump On/Off 0930

Sample Time: Label 1033 Replicate/Code No. Sampled by R. Shealy

Time	Minutes Elapsed	Gallons Purged	Depth to Water (ft)	Temp. (°C)	Cond. (mS/cm)	Dissolved Oxygen (mg/L)	pH	ORP (mV)	Rate (mL/min)	Appearance	
										Color	Odor
933	0	0	3.98	16.78	0.343	4.51	6.60	106.1	210	Brown	None
958	25	1.5	4.32	17.14	0.317	0.69	6.47	16.7	260	Brown	None
1003	30	1.8	4.32	17.18	0.309	0.62	6.45	9.2	260	Brown	None
1008	35	2.1	4.33	17.20	0.303	0.57	6.47	2.1	260	Brown	None
1013	40	2.4	4.33	17.22	0.297	0.52	6.45	-2.7	260	Brown	None
1023	50	3.0	4.33	17.25	0.285	0.42	6.39	-13.5	260	Brown	None
1028	55	3.3	4.33	17.30	0.281	0.40	6.37	-18.2	260	Brown	None
1033	60	3.6	4.33	17.31	0.279	0.39	6.35	-21.2	260	Brown	None

Constituents Sampled	Container	Number	Preservative
VOCs	40 mL VOAs	3	HCl

Well Information

Well Location:	See map	Well Locked at Arrival:	Yes
Condition of Well:	OK	Well Locked at Departure:	Yes
Well Completion:	Flush Mount	Key Number To Well:	---

NOTES:

Well Casing Volumes

Gallons/Foot	1" = 0.04	1.5" = 0.09	2.5" = 0.26	6" = 1.47
	1.25" = 0.06	2" = 0.16	3" = 0.37	

ARCADIS

Groundwater Sampling Form

Project No. GP09HAFS.F39A.DG0FI Well ID G4MW029 Date 3/11/2010

Project Name/Location Hunter Stewart / Ft. Stewart, GA Weather Rain, 65°

Measuring Pt. Description TOC Screen Setting (ft-bmp) 5 - 15 Casing Diameter (in.) 2" Well Material X PVC / SS / Other

Total Depth (ft-bmp) Static Water Level (ft-bmp) 5.53 Water Column Gallons in Well

Calc. Gallons Purged Pump Intake (ft-bmp) Purge Method: Sample Method Low Flow

Gallons Purged ~2.0 MP Elevation PDB / Bladder / Disp. Bailer / Peristaltic X Pump On/Off 1045 / 1127

Sample Time: Label 1124 Replicate/Code No. Sampled by R. Shealy

Time	Minutes Elapsed	Gallons Purged	Depth to Water (ft)	Temp. (°C)	Cond. (mS/cm)	Dissolved Oxygen (mg/L)	pH	ORP (mV)	Rate (mL/min)	Appearance	
										Color	Odor
1049	0	0	5.81	15.81	0.492	2.74	6.24	71.6	190	Clear	None
1109	20	1.0	6.11	15.62	0.486	1.79	6.23	88.3	190	Clear	None
1114	25	1.3	6.11	15.72	0.483	1.62	6.23	89.7	190	Clear	None
1119	30	1.5	6.11	15.69	0.482	1.57	6.22	90.2	190	Clear	None
1124	35	1.7	6.11	15.71	0.481	1.52	6.22	90.8	190	Clear	None

Constituents Sampled	Container	Number	Preservative
VOCs	40 mL VOAs	3	HCl

Well Information

Well Location:	See map	Well Locked at Arrival:	Yes
Condition of Well:	OK	Well Locked at Departure:	Yes
Well Completion:	Flush Mount	Key Number To Well:	---

NOTES:

Well Casing Volumes

Gallons/Foot	1" = 0.04	1.5" = 0.09	2.5" = 0.26	6" = 1.47
	1.25" = 0.06	2" = 0.16	3" = 0.37	

ARCADIS

Groundwater Sampling Form

Project No. GP09HAFS.F39A.DG0FI Well ID G4MW031 Date 3/10/2010

Project Name/Location Hunter Stewart / Ft. Stewart, GA Weather Cloudy, 70°

Measuring Pt. Description TOC Screen Setting (ft-bmp) 10 - 20 Casing Diameter (in.) 2" Well Material X PVC / SS / Other

Total Depth (ft-bmp) Static Water Level (ft-bmp) 4.39 Water Column Gallons in Well

Calc. Gallons Purged Pump Intake (ft-bmp) 15 Purge Method: PDB / Bladder / Disp. Bailer / Peristaltic X Sample Method Low Flow

Gallons Purged 3.2 MP Elevation Pump On/Off 1524 / 1627

Sample Time: Label 1625 Replicate/Code No. Sampled by R. Shealy

Time	Minutes Elapsed	Gallons Purged	Depth to Water (ft)	Temp. (°C)	Cond. (mS/cm)	Dissolved Oxygen (mg/L)	pH	ORP (mV)	Rate (mL/min)	Appearance	
										Color	Odor
1528	0	0.1	4.48	18.64	0.042	4.02	5.56	98.3	180	Clear	None
1538	20	0.7	4.49	18.65	0.043	1.70	5.34	131.9	190	Clear	None
1543	25	0.9	4.49	18.66	0.044	1.38	5.28	139.0	200	Clear	None
1548	30	1.2	4.49	18.92	0.037	1.15	5.25	140.9	200	Clear	None
1553	35	1.4	4.49	19.00	0.038	1.06	5.27	137.7	200	Clear	None
1603	45	1.9	4.49	18.81	0.036	0.69	5.18	128.3	200	Clear	None
1608	50	2.2	4.49	18.82	0.036	0.61	5.14	125.4	200	Clear	None
1615	57	2.6	4.49	18.86	0.036	0.52	5.12	112.0	200	Clear	None
1620	62	2.8	4.49	18.83	0.036	0.51	5.11	109.9	200	Clear	None
1625	67	3.0	4.49	18.85	0.036	0.52	5.11	106.9	200	Clear	None

Constituents Sampled	Container	Number	Preservative
VOCs	40 mL VOAs	3	HCl

Well Information

Well Location:	See map	Well Locked at Arrival:	No
Condition of Well:	OK	Well Locked at Departure:	No
Well Completion:	Flush Mount	Key Number To Well:	---

NOTES:

Well Casing Volumes

Gallons/Foot	1" = 0.04	1.5" = 0.09	2.5" = 0.26	6" = 1.47
	1.25" = 0.06	2" = 0.16	3" = 0.37	

ARCADIS

Groundwater Sampling Form

Project No. GP09HAFS.F39A.DG0FI | Well ID G4MW033 | Date 4/07/2010

Project Name/Location Hunter Stewart / Ft. Stewart, GA | Weather Sunny, warm

Measuring Pt. Description TOC | Screen Setting (ft-bmp) 5 - 15 | Casing Diameter (in.) 2" | Well Material X PVC, ___ SS, ___ Other

Total Depth (ft-bmp) 15 | Static Water Level (ft-bmp) 3.72 | Water Column 11.28 | Gallons in Well 1.8

Calc. Gallons Purged 5.4 | Pump Intake (ft-bmp) *10' to 5' | Purge Method: PDB ___, Bladder ___, Disp. Bailer ___, Peristaltic X | Sample Method Low Flow / 3 Volume

Gallons Purged ___ | MP Elevation ___ | Pump On/Off ___

Sample Time: Label 1625 | Replicate/Code No. ___ | Sampled by C. Bell

Time	Minutes Elapsed	Gallons Purged	Depth to Water (ft)	Temp. (°C)	Cond. (mS/cm)	Dissolved Oxygen (mg/L)	pH	ORP (mV)	Turbidity (NTU)	Appearance	
										Color	Odor
1700	0	0.10	3.80	19.71	0.222	3.03	3.60	-20.1	210	Yellow	None
1705	5	0.20	3.79	19.99	0.225	1.00	3.61	-36.7	200	Yellow	None
1715	15	0.50	3.86	20.26	0.226	0.50	3.62	-42.2	195	Yellow	None
1735	35	2.50	4.26	20.44	0.227	0.18	3.63	-45.2	190	Cloudy yellow	None
1745	45	2.75	4.01	20.60	0.229	0.16	3.62	-51.3	126	Yellow	None
1755	55	3.00	3.86	20.70	0.228	0.17	3.62	-52.7	136	Yellow	None
1800	60	3.25	3.85	20.97	0.230	0.16	3.61	-53.8	131	Yellow	None
1805	65	4.00	3.87	21.18	0.239	0.15	3.58	-53.7	121	Yellow	None
1810	70	4.25	3.86	21.20	0.221	0.14	3.57	-56.5	99	Yellow	None
1815	75	4.50	3.85	21.01	0.221	0.13	3.58	-58.4	46	Yellow	None
1820	80	4.75	3.87	20.90	0.221	0.13	3.57	-58.4	35	Yellow	None

Constituents Sampled	Container	Number	Preservative
VOCs 8260B	40 mL VOAs	3	HCl
SVOCs 8270	1000 mL Amber	2	None
Metals 6010	250 mL Plastic	1	Nitric Acid

Well Information

Well Location:	See map	Well Locked at Arrival:	No
Condition of Well:	Good	Well Locked at Departure:	No
Well Completion:	Flush Mount	Key Number To Well:	---

NOTES: *Pulled tubing to top of water column and began purging per SOP for 3 well volumes, because turbidity did not appear to be decreasing and based on experience with other wells in area.

Well Casing Volumes

Gallons/Foot				
	1" = 0.04	1.5" = 0.09	2.5" = 0.26	6" = 1.47
	1.25" = 0.06	2" = 0.16	3" = 0.37	

ARCADIS

Groundwater Sampling Form

Project No. GP09HAFS.F39A.DG0FI Well ID G4MW034 Date 4/07/2010

Project Name/Location Hunter Stewart / Ft. Stewart, GA Weather

Measuring Pt. Description TOC Screen Setting (ft-bmp) 40 - 45 Casing Diameter (in.) 2" Well Material X PVC / SS / Other

Total Depth (ft-bmp) 45 Static Water Level (ft-bmp) Water Column Gallons in Well

Calc. Gallons Purged Pump Intake (ft-bmp) Purge Method: Sample Method Low Flow

Gallons Purged MP Elevation PDB Bladder Disp. Bailer Peristaltic X Pump On/Off 0940

Sample Time: Label 1400 Replicate/Code No. Sampled by C. Bell

Time	Minutes Elapsed	Purge Rate (mL/min)	Gallons Purged	Depth to Water (ft)	Temp. (°C)	Cond. (µS/cm)	Dissolved Oxygen (mg/L)	pH	ORP (mV)	Turbidity (NTU)	Appearance	
											Color	Odor
0945	0	120		1.45	22.40	527	6.18	0.11	-133.8	50		
1000	15	120		1.46	22.50	528	6.18	0.10	-133.0	48		
1030	45	120		1.47	22.63	523	6.18	0.11	-121.8	41		
1100	75	120		1.48	22.60	523	6.19	0.11	-123.7	38		
1110	85	120		1.48	22.63	522	6.20	0.10	-122.7	38		
1140	115	120		1.48	22.66	522	6.21	0.09	-133.6	36		
1200	135	120		1.49	23.02	523	6.22	0.11	-134.8	24.9		
1230	165	120		1.49	25.76	524	6.31	0.12	-134.2	19.9		
1245	180	120		1.49	24.57	528	6.19	0.11	-128.0	19.3		
1300	195	120		1.50	23.61	528	6.27	0.11	-132.0	15.6		
1315	210	120		1.51	23.31	528	6.27	0.10	-131.4	11.7		
1330	225	120		1.51	22.26	529	6.23	0.10	-130.7	10.2		
1350	245	120		1.51	21.89	527	6.20	0.08	-136.3	9.0		
1355	250	120		1.51	21.58	524	6.20	0.07	-137.5	8.1		
1400	255	120		1.52	21.43	522	6.18	0.06	-135.0	6.2		

Constituents Sampled	Container	Number	Preservative
VOCs 8260B	40 mL VOAs	3	HCl
SVOCs 8270	1000 mL Amber	2	None
Metals 6010	250 mL Plastic	1	Nitric Acid

Well Information

Well Location:	See map	Well Locked at Arrival:	No
Condition of Well:	Good	Well Locked at Departure:	No
Well Completion:	Flush Mount	Key Number To Well:	---

NOTES:

Well Casing Volumes

Gallons/Foot				
	1" = 0.04	1.5" = 0.09	2.5" = 0.26	6" = 1.47
	1.25" = 0.06	2" = 0.16	3" = 0.37	

ARCADIS

Groundwater Sampling Form

Project No. GP09HAFS.F39A.DG0FI Well ID G4MW035 Date 4/06/2010

Project Name/Location Hunter Stewart / Ft. Stewart, GA Weather

Measuring Pt. Description TOC Screen Setting (ft-bmp) 40 - 45 Casing Diameter (in.) 2" Well Material X PVC / SS / Other

Total Depth (ft-bmp) 45 Static Water Level (ft-bmp) Water Column Gallons in Well

Calc. Gallons Purged Pump Intake (ft-bmp) Purge Method: Sample Method Low Flow

Gallons Purged MP Elevation PDB Bladder Disp. Bailer Peristaltic X Pump On/Off 1415 / 1629

Sample Time: Label 1630 Replicate/Code No. Sampled by C. Bell

Time	Minutes Elapsed	Purge Rate (mL/min)	Gallons Purged	Depth to Water (ft)	Temp. (°C)	Cond. (µS/cm)	Dissolved Oxygen (mg/L)	pH	ORP (mV)	Turbidity (NTU)	Appearance	
											Color	Odor
1420	0	100		1.44	18.72	611	0.13	4.40	-86.4	50.23	Clear	None
1425	5	100		1.45	18.04	613	0.11	4.38	-87.1	50.00	Clear	None
1430	10	100		1.44	17.53	613	0.10	4.41	-89.7	50.10	Clear	None
1445	25	100		1.44	17.48	614	0.09	4.41	-90.7	50.61	Clear	None
1500	40	100		1.44	17.50	614	0.08	4.40	-91.3	25.73	Clear	None
1510	50	100		1.44	17.46	614	0.07	4.38	-91.5	38.60	Clear	None
1520	60	100		1.45	17.47	615	0.06	4.36	-95.4	42.12	Clear	None
1530	70	100		1.44	17.51	613	0.06	4.32	-95.7	26.63	Clear	None
1545	85	100		1.45	17.49	613	0.05	4.32	-96.8	24.22	Clear	None
1600	100	100		1.45	17.53	616	0.06	4.31	-96.8	22.12	Clear	None
1620	120	100		1.44	17.51	616	0.06	4.32	-97.4	21.96	Clear	None
1625	125	100		1.45	17.50	616	0.05	4.34	-97.6	21.90	Clear	None
1630	130	100	3.43	1.44	17.52	617	0.06	4.34	-97.2	21.77	Clear	None

Constituents Sampled	Container	Number	Preservative
VOCs 8260B	40 mL VOAs	3	HCl
SVOCs 8270	1000 mL Amber	2	None
Metals 6010	250 mL Plastic	1	Nitric Acid

Well Information

Well Location:	See map	Well Locked at Arrival:	No
Condition of Well:	Good	Well Locked at Departure:	No
Well Completion:	Flush Mount	Key Number To Well:	---

NOTES:

Well Casing Volumes

Gallons/Foot				
	1" = 0.04	1.5" = 0.09	2.5" = 0.26	6" = 1.47
	1.25" = 0.06	2" = 0.16	3" = 0.37	

ARCADIS

Groundwater Sampling Form

Project No. GP09HAFS.F39A.DG0FI Well ID G4MW036 Date 4/06/2010

Project Name/Location Hunter Stewart / Ft. Stewart, GA Weather Sunny, warm

Measuring Pt. Description TOC Screen Setting (ft-bmp) 40 - 45 Casing Diameter (in.) 2" Well Material X PVC / SS / Other

Total Depth (ft-bmp) 45 Static Water Level (ft-bmp) Water Column Gallons in Well

Calc. Gallons Purged Pump Intake (ft-bmp) Purge Method: PDB / Bladder / Disp. Bailer / Peristaltic X Sample Method Low Flow

Gallons Purged MP Elevation Pump On/Off 1650

Sample Time: Label 1845 Replicate/Code No. Sampled by C. Bell

Time	Minutes Elapsed	Gallons Purged	Depth to Water (ft)	Temp. (°C)	Cond. (mS/cm)	Dissolved Oxygen (mg/L)	pH	ORP (mV)	Turbidity (NTU)	Appearance	
										Color	Odor
1700	10		8.89	22.34	1.766	3.04	4.06	214.5	16.5	Clear	None
1710	20		9.32	22.27	1.772	2.52	3.97	214.9	14.2	Clear	None
1720	30		9.35	22.23	1.833	1.18	3.93	233.4	13.9	Clear	None
1730	40		9.45	21.99	1.853	1.33	3.89	254.2	13.8	Clear	None
1740	50		9.50	22.06	1.870	1.12	3.91	247.2	13.6	Clear	None
1750	60		9.51	22.08	1.883	0.86	3.97	242.2	13.9	Clear	None
1800	70		9.55	22.08	1.787	2.01	3.92	258.1	13.1	Clear	None
1810	80		9.56	22.37	1.869	0.59	3.86	133.7	12.9	Clear	None
1820	90		9.57	22.33	1.888	0.23	3.87	59.9	12.6	Clear	None
1830	100		9.59	22.23	1.870	0.19	3.88	45.5	10.11	Clear	None
1835	105		9.60	22.37	1.825	0.34	3.87	52.2	10.03	Clear	None
1840	110	~10	9.61	22.34	1.822	0.23	3.87	30.7	9.96	Clear	None

Constituents Sampled	Container	Number	Preservative
VOCs	40 mL VOAs	3	HCl

Well Information

Well Location:	See map	Well Locked at Arrival:	No
Condition of Well:	Good	Well Locked at Departure:	No
Well Completion:	Flush Mount	Key Number To Well:	---

NOTES:

Well Casing Volumes

Gallons/Foot	1" = 0.04	1.5" = 0.09	2.5" = 0.26	6" = 1.47
	1.25" = 0.06	2" = 0.16	3" = 0.37	

ARCADIS

Groundwater Sampling Form

Project No. GP09HAFS.F39A.DG0FI | Well ID G4MW010 | Date 1/27/2011

Project Name/Location Hunter Stewart / Ft. Stewart, GA | Weather Sunny, cold

Measuring Pt. Description TOC | Screen Setting (ft-bmp) 5 - 15 | Casing Diameter (in.) 2" | Well Material X PVC, SS, Other

Total Depth (ft-bmp) 15 | Static Water Level (ft-bmp) 5.58 | Water Column | Gallons in Well

Calc. Gallons Purged | Pump Intake (ft-bmp) 10 | Purge Method: PDB, Bladder, Disp. Bailer, Peristaltic X | Sample Method Low Flow

Gallons Purged | MP Elevation | Pump On/Off 1015

Sample Time: Label 1053 | Replicate/Code No. | Sampled by C. Bell

Time	Minutes Elapsed	Purge Rate (mL/min)	Gallons Purged	Depth to Water (ft)	Temp. (°C)	Cond. (µmhos/cm)	Dissolved Oxygen (mg/L)	pH	ORP (mV)	Turbidity (NTU)	Appearance Color	Appearance Odor
1025	10	100		5.59	18.01	290	1.76	6.05	-27.9	31.1	Clear	None
1030	15	120		5.59	18.09	293	1.38	6.05	-28.9	3.6	Clear	None
1035	20	120		5.60	17.92	295	1.14	6.05	-35.5	1.6	Clear	None
1040	25	120		5.60	18.06	294	0.98	6.05	-38.2	1.8	Clear	None
1045	30	110		5.59	18.51	298	0.63	6.05	-42.5	1.2	Clear	None
1050	35	110		5.59	18.30	300	0.59	6.06	-48.6	1.3	Clear	None
1053	38	110		5.60	18.34	300	0.58	6.06	-47.4	0.99	Clear	None

Constituents Sampled	Container	Number	Preservative
VOCs	40 mL VOAs	3	HCl
SVOCs	1 L Amber	2	None
RCRA Metals	500 mL Plastic	1	Nitric Acid
Dissolved Metals	500 mL Plastic	1	Nitric Acid

Well Information

Well Location:	See map	Well Locked at Arrival:	
Condition of Well:	Good	Well Locked at Departure:	
Well Completion:	Flush Mount	Key Number To Well:	---

NOTES: Turbidity (qualitative): clear, yellowish

Well Casing Volumes

Gallons/Foot	1" = 0.04	1.5" = 0.09	2.5" = 0.26	6" = 1.47
	1.25" = 0.06	2" = 0.16	3" = 0.37	

ARCADIS

Groundwater Sampling Form

Project No. GP09HAFS.F39A.DG0FI
Well ID G4MW011
Date 1/27/2011

Project Name/Location Hunter Stewart / Ft. Stewart, GA
Weather Sunny, cold

Measuring Pt. Description TOC
Screen Setting (ft-bmp) 5 - 15
Casing Diameter (in.) 2"
Well Material X PVC / SS / Other

Total Depth (ft-bmp) 15
Static Water Level (ft-bmp) 6.05
Water Column
Gallons in Well

Calc. Gallons Purged
Pump Intake (ft-bmp) 10
Purge Method:
PDB
Bladder
Disp. Bailer
Peristaltic X
Sample Method Low Flow

Gallons Purged 5
MP Elevation
Pump On/Off 0900 / 1000

Sample Time: Label 0945
Replicate/Code No.
Sampled by C. Bell

Time	Minutes Elapsed	Purge Rate (mL/min)	Liters Purged	Depth to Water (ft)	Temp. (°C)	Cond. (µmhos/cm)	Dissolved Oxygen (mg/L)	pH	ORP (mV)	Turbidity (NTU)	Appearance	
											Color	Odor
0905	5	100	0.5	6.19	15.99	190	2.82	5.53	18.0	207	Orange	None
0910	10	100	1.0	6.08	14.34	175	1.01	5.42	-25.2	101	Orange	None
0915	15	100	1.5	6.11	14.84	172	0.82	5.37	-25.8	25.4	Orange	None
0920	20	100	2.0	6.12	14.94	172	0.81	5.37	-34.3	19.4	Orange	None
0925	25	100	2.5	6.13	15.19	172	0.72	5.36	-44.7	17.8	Orange	None
0930	30	100	3.0	6.12	15.19	173	0.70	5.36	-49.0	15	Orange	None
0935	35	100	3.5	6.16	15.04	171	0.87	5.42	-34.6	16.4	Orange	None
0940	40	100	4.0	6.15	15.37	171	0.70	5.37	-37.1	15	Orange	None
0945	45	100	4.5	6.15	15.18	171	0.68	5.36	-32.9	15.5	Orange	None

Constituents Sampled	Container	Number	Preservative
VOCs 8260B	40 mL VOAs	3	HCl
SVOCs 8270	1000 mL Amber	2	None
RCRA Metals	500 mL Plastic	1	Nitric Acid
Dissolved Metals	500 mL Plastic	1	Nitric Acid

Well Information

Well Location: See map
Condition of Well: Good
Well Completion: Flush Mount
Well Locked at Arrival:
Well Locked at Departure:
Key Number To Well: ---

NOTES: Turbidity (qualitative): cloudy

Well Casing Volumes

Gallons/Foot 1" = 0.04 1.5" = 0.09 2.5" = 0.26 6" = 1.47
1.25" = 0.06 2" = 0.16 3" = 0.37

ARCADIS

Groundwater Sampling Form

Project No. GP09HAFS.F39A.DG0FI

Well ID G4MW013

Date 1/27/2011

Project Name/Location Hunter Stewart / Ft. Stewart, GA

Weather Sunny, cold

Measuring Pt. Description TOC

Screen Setting (ft-bmp) 4-14

Casing Diameter (in.) 4

Well Material X PVC / ___ SS / ___ Other

Total Depth (ft-bmp) 14

Static Water Level (ft-bmp) 6.05

Water Column 7.95

Gallons in Well

Calc. Gallons Purged

Pump Intake (ft-bmp)

Purge Method:

PDB

Bladder

Disp. Bailer

Peristaltic X

Sample Method Low Flow

Gallons Purged

MP Elevation

Pump On/Off 1200/1243

Sample Time: Label 1400

Replicate/Code No.

Sampled by C. Bell

Time	Minutes Elapsed	Purge Rate (mL/min)	Gallons Purged	Depth to Water (ft)	Temp. (°C)	Cond. (µS/cm)	Dissolved Oxygen (mg/L)	pH	ORP (mV)	Turbidity (NTU)	Appearance	
											Color	Odor
1210	10	120		6.06	17.44	344	4.79	6.29	74.2	54	clear	none
1215	15	100		6.06	17.50	352	3.71	6.22	126.7	8.4	clear	none
1220	20	100		6.06	18.27	358	3.15	6.24	121.9	6.4	clear	none
1225	25	100		6.07	18.43	369	2.92	6.27	108.0	5.9	clear	none
1230	30	100		6.07	18.81	391	2.48	6.30	82.5	4.1	clear	none
1235	35	100		6.07	18.85	393	2.29	6.30	70.9	4.3	clear	none
1240	40	100		6.07	18.90	395	2.26	6.30	68.0	3.5	clear	none
1243	43	100		6.08	18.81	400	2.12	6.31	60.6	3.9	clear	none

Constituents Sampled	Container	Number	Preservative
VOCs 8260B	40 mL VOAs	3	HCl
SVOCs 8270	1000 mL Amber	2	None
RCRA Metals	500 mL Plastic	1	Nitric Acid
Dissolved Metals	500 mL Plastic	1	Nitric Acid

Well Information

Well Location:	See map	Well Locked at Arrival:	
Condition of Well:	Good	Well Locked at Departure:	
Well Completion:	Flush Mount	Key Number To Well:	---

NOTES:

Well Casing Volumes

Gallons/Foot	1" = 0.04	1.5" = 0.09	2.5" = 0.26	6" = 1.47
	1.25" = 0.06	2" = 0.16	3" = 0.37	

ARCADIS

Groundwater Sampling Form

Project No. GP09HAFS.F39A.DG0FI

Well ID G4MW014

Date 1/25/2011

Project Name/Location Hunter Stewart / Ft. Stewart, GA

Weather Rainy

Measuring Pt. Description TOC

Screen Setting (ft-bmp) 2-12

Casing Diameter (in.) 1"

Well Material X PVC ___ SS ___ Other

Total Depth (ft-bmp) 12

Static Water Level (ft-bmp) 4.62

Water Column

Gallons in Well

Calc. Gallons Purged

Pump Intake (ft-bmp) 7

Purge Method:

PDB

Bladder

Disp. Bailer

Peristaltic X

Sample Method Low Flow

Gallons Purged

MP Elevation

Pump On/Off 1410/1425

Sample Time: Label 1430

Replicate/Code No.

Sampled by C. Bell

Time	Minutes Elapsed	Purge Rate (mL/min)	Gallons Purged	Depth to Water (ft)	Temp. (°C)	Cond. (µS/cm)	Dissolved Oxygen (mg/L)	pH	ORP (mV)	Turbidity (NTU)	Appearance	
											Color	Odor
1410		100		4.80	14.73	0.089	1.08	2.43	140.6	6.7		
1415		100		4.80	15.04	0.069	1.36	2.58	120.4	7.11		
1420		100		4.81	14.99	0.068	1.25	2.57	117.3	8.91		
1425		100	1	4.82	15.10	0.068	1.29	2.56	115.1	5.67		

Constituents Sampled	Container	Number	Preservative
VOCs 8260B	40 mL VOAs	3	HCl
SVOCs 8270	1000 mL Amber	2	None
Metals 6010	500 mL Plastic	1	Nitric Acid

Well Information

Well Location:	See map	Well Locked at Arrival:	
Condition of Well:	Water in vault	Well Locked at Departure:	
Well Completion:	Flush Mount	Key Number To Well:	---

NOTES: Turbidity (qualitative): clear

Well Casing Volumes

Gallons/Foot				
	1" = 0.04	1.5" = 0.09	2.5" = 0.26	6" = 1.47
	1.25" = 0.06	2" = 0.16	3" = 0.37	

ARCADIS

Groundwater Sampling Form

Project No. GP09HAFS.F39A.DG0FI | Well ID G4MW016 | Date 1/26/2011

Project Name/Location Hunter Stewart / Ft. Stewart, GA | Weather windy, cold, partly cloudy

Measuring Pt. Description TOC | Screen Setting (ft-bmp) 3-13 | Casing Diameter (in.) 1" | Well Material X PVC / SS / Other

Total Depth (ft-bmp) 10.51 | Static Water Level (ft-bmp) 4.2 | Water Column 6.31 | Gallons in Well 0.25

Calc. Gallons Purged 0.75 | Pump Intake (ft-bmp) ~8 | Purge Method: PDB / Bladder / Disp. Bailer / Peristaltic X | Sample Method Low Flow

Gallons Purged 1.25 | MP Elevation

Sample Time: Label 1030 | Pump On/Off 0910/1030

Replicate/Code No. G4DUP-01 | Sampled by J.Hanna

Time	Minutes Elapsed	Purge Rate (mL/min)	Gallons Purged	Depth to Water (ft)	Temp. (°C)	Cond. (µS/cm)	Dissolved Oxygen (mg/L)	pH	ORP (mV)	Turbidity (NTU)	Appearance	
											Color	Odor
915	5	0.05	0.25	5.09	15.12	130	5.01	4.38	199.0	285	brown	none
920	10	0.05	0.5	5.15	15.37	167	4.15	4.04	167.0	261	brown	none
925	15	0.05	0.75	5.15	15.36	169	4.17	4.16	169.0	231	brown	none
930	20	0.05	1	5.15	15.33	169	1.60	4.18	100.0	234	brown	none
935	25	0.05	1.25	5.15	15.48	173	1.60	4.21	97.0	207	brown	none

Constituents Sampled	Container	Number	Preservative
VOCs 8260B	40 mL VOAs	3	HCl
SVOCs 8270D	1000 mL Amber	2	None
RCRA Metals 6010	500 mL Plastic	1	Nitric Acid
BIOGEO	Various Bottles		Various

Well Information

Well Location:	See map	Well Locked at Arrival:	
Condition of Well:	Good	Well Locked at Departure:	
Well Completion:	Flush Mount	Key Number To Well:	---

NOTES: Turbidity (qualitative): high at first but cleared up

Volume purged due to drop in DTW below 1/3 ft.

Well Casing Volumes

Gallons/Foot				
	1" = 0.04	1.5" = 0.09	2.5" = 0.26	6" = 1.47
	1.25" = 0.06	2" = 0.16	3" = 0.37	

ARCADIS

Groundwater Sampling Form

Project No. GP09HAFS.F39A.DG0FI | Well ID G4MW017 | Date 1/26/2011

Project Name/Location Hunter Stewart / Ft. Stewart, GA | Weather windy, cold, clear

Measuring Pt. Description TOC | Screen Setting (ft-bmp) 2-12 | Casing Diameter (in.) 1" | Well Material X PVC, ___ SS, ___ Other

Total Depth (ft-bmp) 8.31 | Static Water Level (ft-bmp) 5.05 | Water Column 3.26 | Gallons in Well 0.13

Calc. Gallons Purged 0.39 | Pump Intake (ft-bmp) ~9 | Purge Method: PDB ___, Bladder ___, Disp. Bailer ___, Peristaltic X | Sample Method Low Flow

Gallons Purged 1.25 | MP Elevation ___ | Pump On/Off 1925/2005

Sample Time: Label 2005 | Replicate/Code No. ___ | Sampled by J. Hanna

Time	Minutes Elapsed	Purge Rate (mL/min)	Gallons Purged	Depth to Water (ft)	Temp. (°C)	Cond. (µS/cm)	Dissolved Oxygen (mg/L)	pH	ORP (mV)	Turbidity (NTU)	Appearance	
											Color	Odor
1930	5	0.05	0.25	7.75	13.16	135	6.02	4.75	224.0	592	brown	none
1935	10	0.05	0.5	8.18	13.07	139	5.65	4.73	220.0	233	brown	none
1940	15	0.05	0.75	8.22	13.17	152	4.90	4.65	214.0	214	brown	none
1945	20	0.05	1	8.18	13.51	162	4.72	4.60	206.0	197	brown	none
1950	25	0.05	1.25	8.25	13.56	168	4.50	4.60	197.0	189	brown	none

Constituents Sampled	Container	Number	Preservative
VOCs 8260B	40 mL VOAs	3	HCl
SVOCs 8270	1000 mL Amber	2	None
RCRA Metals 6010	500 mL Plastic	1	Nitric Acid
Dissolved Metals	500 mL Plastic		Nitric Acid (field filtered)

Well Information

Well Location:	See map	Well Locked at Arrival:	
Condition of Well:	Good	Well Locked at Departure:	
Well Completion:	Flush Mount	Key Number To Well:	---

NOTES: Turbidity (qualitative): high turbidity

Final turbidity reading registered at 20.4 NTU

Well Casing Volumes

Gallons/Foot				
	1" = 0.04	1.5" = 0.09	2.5" = 0.26	6" = 1.47
	1.25" = 0.06	2" = 0.16	3" = 0.37	

ARCADIS

Groundwater Sampling Form

Project No. GP09HAFS.F39A.DG0FI | Well ID G4MW018 | Date 1/26/2011

Project Name/Location Hunter Stewart / Ft. Stewart, GA | Weather sunny, cool

Measuring Pt. Description TOC | Screen Setting (ft-bmp) 2-12 | Casing Diameter (in.) 1" | Well Material X PVC / SS / Other

Total Depth (ft-bmp) 12 | Static Water Level (ft-bmp) 4.97 | Water Column 7.03 | Gallons in Well

Calc. Gallons Purged | Pump Intake (ft-bmp) 7 | Purge Method: PDB / Bladder / Disp. Bailer / Peristaltic X | Sample Method Low Flow

Liters Purged 4.00 | MP Elevation | Pump On/Off 1545/1625

Sample Time: Label 1625 | Replicate/Code No. | Sampled by C. Bell

Time	Minutes Elapsed	Purge Rate (mL/min)	Liters Purged	Depth to Water (ft)	Temp. (°C)	Cond. (µS/cm)	Dissolved Oxygen (mg/L)	pH	ORP (mV)	Turbidity (NTU)	Appearance	
											Color	Odor
1550	5	100	0.50	5.21	18.52	175	4.59	4.30	47.3	14.8	green	none
1555	10	100	1	5.21	18.83	175	1.54	4.27	37.6	14.1	green	none
1600	15	100	1.50	5.21	18.88	174	1.11	4.27	25.2	14.5	green	none
1605	20	100	2	5.21	18.88	172	0.86	4.26	25.9	11.9	green	none
1610	25	100	2.50	5.20	18.90	172	0.49	4.26	13.4	10	green	none
1615	30	100	3	5.21	19.00	175	0.40	4.26	14.0	9.98	green	none
1620	35	100	3.50	5.21	18.80	174	0.38	4.26	15.4	9.99	green	none

Constituents Sampled	Container	Number	Preservative
VOCs 8260B	40 mL VOAs	3	HCl
SVOCs 8270	1000 mL Amber	2	None
RCRA Metals 6010	500 mL Plastic	1	Nitric Acid
Dissolved Metals	500 mL Plastic	1	Nitric Acid

Well Information

Well Location:	See map	Well Locked at Arrival:	
Condition of Well:	Good	Well Locked at Departure:	
Well Completion:	Flush Mount	Key Number To Well:	---

NOTES: Turbidity (qualitative): cloudy

Well Casing Volumes

Gallons/Foot				
	1" = 0.04	1.5" = 0.09	2.5" = 0.26	6" = 1.47
	1.25" = 0.06	2" = 0.16	3" = 0.37	

ARCADIS

Groundwater Sampling Form

Project No. GP09HAFS.F39A.DG0FI | Well ID G4MW019 | Date 1/27/2011

Project Name/Location Hunter Stewart / Ft. Stewart, GA | Weather sunny, warm

Measuring Pt. Description TOC | Screen Setting (ft-bmp) 2-12 | Casing Diameter (in.) 1" | Well Material X PVC / SS / Other

Total Depth (ft-bmp) 12 | Static Water Level (ft-bmp) 4.88 | Water Column 7.12 | Gallons in Well 0.28

Calc. Gallons Purged | Pump Intake (ft-bmp) 7 | Purge Method: PDB / Bladder / Disp. Bailer / Peristaltic X | Sample Method Low Flow

Gallons Purged | MP Elevation | Pump On/Off 1305/1355

Sample Time: Label 1335 | Replicate/Code No. | Sampled by C. Bell

Time	Minutes Elapsed	Purge Rate (mL/min)	Gallons Purged	Depth to Water (ft)	Temp. (°C)	Cond. (µS/cm)	Dissolved Oxygen (mg/L)	pH	ORP (mV)	Turbidity (NTU)	Appearance	
											Color	Odor
1315	10	100		6.71	16.97	850	4.27	5.18	-71.6	71.6	clear	none
1320	15	100		6.65	17.58	756	2.20	5.19	-94.1	55.7	clear	none
1325	20	100		6.60	18.59	519	0.94	5.20	-124.3	31.4	clear	none
1330	25	100		6.60	18.75	477	0.81	5.20	-129.8	19.3	clear	none
1335	30	100		6.65	18.70	474	0.82	5.20	-130.8	11.8	clear	none
1340	35	100		6.66	19.13	448	0.69	5.21	-137.3	6.1	clear	none
1345	40	100		6.68	19.24	350	0.58	5.20	-134.0	5.6	clear	none
1350	45	100		6.70	19.25	328	0.56	5.20	-136.9	4.2	clear	none
1355	50	100		6.72	19.28	325	0.54	5.18	-137.7	3.9	clear	none

Constituents Sampled	Container	Number	Preservative
VOCs 8260B	40 mL VOAs	3	HCl
SVOCs 8270	1000 mL Amber	2	None
RCRA Metals 6010	500 mL Plastic	1	Nitric Acid
Sdissolved Metals	500 mL Plastic	1	Nitric Acid

Well Information

Well Location:	See map	Well Locked at Arrival:	
Condition of Well:	Good	Well Locked at Departure:	
Well Completion:	Flush Mount	Key Number To Well:	---

NOTES: Turbidity (qualitative): clear

Well Casing Volumes

Gallons/Foot				
	1" = 0.04	1.5" = 0.09	2.5" = 0.26	6" = 1.47
	1.25" = 0.06	2" = 0.16	3" = 0.37	

ARCADIS

Groundwater Sampling Form

Project No. GP09HAFS.F39A.DG0FI | Well ID G4MW020 | Date 1/27/2011

Project Name/Location Hunter Stewart / Ft. Stewart, GA | Weather sunny, cold

Measuring Pt. Description TOC | Screen Setting (ft-bmp) 2-12 | Casing Diameter (in.) 1" | Well Material X PVC / SS / Other

Total Depth (ft-bmp) 12 | Static Water Level (ft-bmp) 4.7 | Water Column 7.3 | Gallons in Well

Calc. Gallons Purged | Pump Intake (ft-bmp) 7 | Purge Method: PDB / Bladder / Disp. Bailer / Peristaltic X | Sample Method Low Flow

Liters Purged 3.5 | MP Elevation | Pump On/Off 0719/0750

Sample Time: Label 750 | Replicate/Code No. | Sampled by C. Bell

Time	Minutes Elapsed	Purge Rate (mL/min)	Liters Purged	Depth to Water (ft)	Temp. (°C)	Cond. (µS/cm)	Dissolved Oxygen (mg/L)	pH	ORP (mV)	Turbidity (NTU)	Appearance	
											Color	Odor
725	5	200	1.0	5.86	16.28	261	2.21	5.95	-24.8	17.8	clear	none
730	10	100	1.5	5.15	14.92	252	1.67	5.98	-34.9	19.4	clear	none
735	15	100	2.0	5.45	15.37	250	1.35	5.96	-35.0	14.1	clear	none
740	20	100	2.5	5.45	15.32	248	1.18	5.98	-43.5	12.2	clear	none
745	25	100	3.0	5.46	15.45	248	1.08	5.98	-48.6	9.98	clear	none
750	30	100	3.5	5.47	15.43	248	1.02	5.98	-49.3	8.01	clear	none

Constituents Sampled	Container	Number	Preservative
VOCs 8260B	40 mL VOAs	3	HCl
SVOCs 8270	1000 mL Amber	2	None
RCRA Metals 6010	500 mL Plastic	1	Nitric Acid
Dissolved Metals	500 mL Plastic	1	Nitric Acid

Well Information

Well Location: See map | Well Locked at Arrival:

Condition of Well: Good | Well Locked at Departure:

Well Completion: Flush Mount | Key Number To Well: ---

NOTES: Turbidity (qualitative): clear

Well Casing Volumes

Gallons/Foot 1" = 0.04 | 1.5" = 0.09 | 2.5" = 0.26 | 6" = 1.47

1.25" = 0.06 | 2" = 0.16 | 3" = 0.37

ARCADIS

Groundwater Sampling Form

Project No. GP09HAFS.F39A.DG0FI | Well ID G4MW022 | Date 1/25/2011

Project Name/Location Hunter Stewart / Ft. Stewart, GA | Weather light drizzle

Measuring Pt. Description TOC | Screen Setting (ft-bmp) 3-13 | Casing Diameter (in.) 2" | Well Material X PVC / SS / Other

Total Depth (ft-bmp) 16.1 | Static Water Level (ft-bmp) 8.1 | Water Column 8 | Gallons in Well 1.28

Calc. Gallons Purged 3.84 | Pump Intake (ft-bmp) ~8 | Purge Method: PDB / Bladder / Disp. Bailer / Peristaltic X | Sample Method Low Flow

Gallons Purged 4.37 | MP Elevation | Pump On/Off 1035/1115

Sample Time: Label 1115 | Replicate/Code No. | Sampled by J. Hanna

Time	Minutes Elapsed	Purge Rate (mL/min)	Gallons Purged	Depth to Water (ft)	Temp. (°C)	Cond. (µS/cm)	Dissolved Oxygen (mg/L)	pH	ORP (mV)	Turbidity (NTU)	Appearance	
											Color	Odor
1043	8	0.15	1.20	12.50	17.33	100	0.96	4.78	-48.0	349	lt grey/brown	yes
1051	16	0.15	2.4	15.10	18.02	155	2.12	4.71	-45.0	543	lt grey/brown	yes
1059	24	0.15	3.60	15.35	17.56	231	2.65	4.71	-32.0	236	lt grey/brown	yes
1105	30	0.07	4.02	15.41	17.31	233	2.71	4.71	-39.0	171	lt grey/brown	yes
1110	35	0.07	4.37	15.43	17.35	234	2.76	4.71	-39.0	148	lt grey/brown	yes

Constituents Sampled	Container	Number	Preservative
VOCs 8260B	40 mL VOAs	3	HCl
SVOCs 8270	1000 mL Amber	2	None
RCRA Metals 6010	500 mL Plastic	1	Nitric Acid
Dissolved Metals	500 mL Plastic	1	Nitric Acid

Well Information

Well Location:	See map	Well Locked at Arrival:	
Condition of Well:	Good	Well Locked at Departure:	
Well Completion:	Flush Mount	Key Number To Well:	---

NOTES: Turbidity (qualitative): high turbidity

Due to DTW dropping over 1/3 ft., had to volume purge

Well Casing Volumes

Gallons/Foot				
	1" = 0.04	1.5" = 0.09	2.5" = 0.26	6" = 1.47
	1.25" = 0.06	2" = 0.16	3" = 0.37	

ARCADIS

Groundwater Sampling Form

Project No. GP09HAFS.F39A.DG0FI | Well ID G4MW023 | Date 1/27/2011

Project Name/Location Hunter Stewart / Ft. Stewart, GA | Weather sunny, cold

Measuring Pt. Description TOC | Screen Setting (ft-bmp) 5-15 | Casing Diameter (in.) 2" | Well Material X PVC, ___ SS, ___ Other

Total Depth (ft-bmp) 18.6 | Static Water Level (ft-bmp) 8.19 | Water Column 10.41 | Gallons in Well 1.7

Calc. Gallons Purged 5.0 | Pump Intake (ft-bmp) ~10 | Purge Method: PDB ___ Bladder ___ Disp. Bailer ___ Peristaltic X | Sample Method Low Flow

Gallons Purged 1.3 | MP Elevation ___ | Pump On/Off 0815/0915

Sample Time: Label 915 | Replicate/Code No. MS/MSD | Sampled by J. Hanna

Time	Minutes Elapsed	Purge Rate (mL/min)	Gallons Purged	Depth to Water (ft)	Temp. (°C)	Cond. (µS/cm)	Dissolved Oxygen (mg/L)	pH	ORP (mV)	Turbidity (NTU)	Appearance	
											Color	Odor
820	5	0.05	0.25	8.40	15.46	211	1.72	6.04	185.0	107.3	lt. brown	none
825	10	0.05	0.5	8.40	15.32	214	1.86	6.09	186.0	108.2	lt. brown	none
830	15	0.05	0.75	8.40	15.79	215	1.48	6.12	69.7	103.2	lt. brown	none
835	20	0.05	1	8.40	16.18	211	1.39	6.03	65.4	96	lt. brown	none
840	25	0.05	1.25	8.40	16.10	209	1.36	6.04	61.2	93.7	lt. brown	none

Constituents Sampled	Container	Number	Preservative
VOCs 8260B	40 mL VOAs	3	HCl
SVOCs 8270	1000 mL Amber	2	None
RCRA Metals 6010	500 mL Plastic	1	Nitric Acid
Dissolved Metals	500 mL Plastic	1	Nitric Acid

Well Information

Well Location:	See map	Well Locked at Arrival:	
Condition of Well:	Good	Well Locked at Departure:	
Well Completion:	Flush Mount	Key Number To Well:	---

NOTES: Turbidity (qualitative): high turbidity

Well Casing Volumes

Gallons/Foot				
	1" = 0.04	1.5" = 0.09	2.5" = 0.26	6" = 1.47
	1.25" = 0.06	2" = 0.16	3" = 0.37	

ARCADIS

Groundwater Sampling Form

Project No. GP09HAFS.F39A.DG0FI | Well ID G4MW024 | Date 1/27/2011

Project Name/Location Hunter Stewart / Ft. Stewart, GA | Weather sunny

Measuring Pt. Description TOC | Screen Setting (ft-bmp) 3.61-13.61 | Casing Diameter (in.) 2" | Well Material X PVC / SS / Other

Total Depth (ft-bmp) 13.61 | Static Water Level (ft-bmp) 6.17 | Water Column 7.44 | Gallons in Well 1.19

Calc. Gallons Purged | Pump Intake (ft-bmp) 10 | Purge Method: PDB / Bladder / Disp. Bailer / Peristaltic X | Sample Method Low Flow

Gallons Purged 1.5 | MP Elevation | Pump On/Off 1025/1105

Sample Time: Label 1110 | Replicate/Code No. | Sampled by S. Schmid

Time	Minutes Elapsed	Purge Rate (mL/min)	Gallons Purged	Depth to Water (ft)	Temp. (°C)	Cond. (µS/cm)	Dissolved Oxygen (mg/L)	pH	ORP (mV)	Turbidity (NTU)	Appearance Color	Appearance Odor
1030	5	140	0.18	6.25	14.29	675	2.60	5.55	-18.3	12.3	very lt yellow	none
1035	10	140	0.37	6.31	15.84	658	0.89	5.55	-33.0	7.05	very lt yellow	none
1040	15	140	0.55	6.34	16.32	636	0.66	5.59	-44.4	5.7	very lt yellow	none
1045	20	140	0.74	6.34	16.43	612	0.60	5.57	-47.9	5.12	very lt yellow	none
1050	25	140	0.92	6.35	16.69	570	0.48	5.58	-55.6	2.67	very lt yellow	none
1055	30	140	1.11	6.35	16.94	550	0.41	5.58	-62.1	2.33	very lt yellow	none
1100	35	140	1.29	6.35	17.12	539	0.41	5.58	-66.6	3.48	very lt yellow	none
1105	40	140	1.48	6.35	17.35	535	0.37	5.57	-69.5	2.11	very lt yellow	none

Constituents Sampled	Container	Number	Preservative
VOCs 8260B	40 mL VOAs	3	HCl
SVOCs 8270	1000 mL Amber	2	None
RCRA Metals 6010	500 mL Plastic	1	Nitric Acid
Dissolved Metals	500 mL Plastic	1	Nitric Acid

Well Information

Well Location: See map | Well Locked at Arrival:

Condition of Well: Water in vault | Well Locked at Departure:

Well Completion: Flush Mount | Key Number To Well: ---

NOTES: Turbidity (qualitative): clear

Well Casing Volumes

Gallons/Foot 1" = 0.04 | 1.5" = 0.09 | 2.5" = 0.26 | 6" = 1.47

1.25" = 0.06 | 2" = 0.16 | 3" = 0.37

ARCADIS

Groundwater Sampling Form

Project No. GP09HAFS.F39A.DG0FI

Well ID G4MW025

Date 1/27/2011

Project Name/Location Hunter Stewart / Ft. Stewart, GA

Weather sunny, 50s

Measuring Pt. Description TOC

Screen Setting (ft-bmp) 5.57-10.57

Casing Diameter (in.) 2"

Well Material X PVC / SS / Other

Total Depth (ft-bmp) 10.57

Static Water Level (ft-bmp) 4.69

Water Column 5.88

Gallons in Well 0.94

Calc. Gallons Purged

Pump Intake (ft-bmp) 8

Purge Method: PDB / Bladder / Disp. Bailer / Peristaltic X

Sample Method Low Flow

Gallons Purged 1.8

MP Elevation

Pump On/Off 850/955

Sample Time: Label 1000

Replicate/Code No.

Sampled by S. Schmid

Time	Minutes Elapsed	Purge Rate (mL/min)	Gallons Purged	Depth to Water (ft)	Temp. (°C)	Cond. (µS/cm)	Dissolved Oxygen (mg/L)	pH	ORP (mV)	Turbidity (NTU)	Appearance	
											Color	Odor
855	5	105	0.14	4.97	13.33	211	4.93	4.20	170.7	40.9	rusty specks	light
900	10	105	0.28	4.97	13.83	211	2.07	4.21	337.8	23.3	rusty specks	light
905	15	105	0.42	4.97	13.70	211	1.72	4.21	360.7	60.3	rusty specks	light
910	20	105	0.55	4.97	13.63	211	1.97	4.21	356.1	45.6	rusty specks	light
915	25	105	0.69	4.97	13.79	213	1.32	4.20	295.6	40.6	rusty specks	light
920	30	105	0.83	4.97	13.82	217	1.05	4.21	240.5	31.4	rusty specks	light
925	35	105	0.97	4.97	13.71	218	1.11	4.21	198.2	25.7	rusty specks	light
930	40	105	1.11	4.98	14.00	220	0.88	4.21	168.9	16.5	rusty specks	light
935	45	105	1.25	4.98	14.11	221	0.86	4.21	154.8	18.3	rusty specks	light
940	50	105	1.39	4.98	14.28	227	0.98	4.22	146.9	16.2	rusty specks	light
945	55	105	1.53	4.98	14.34	228	0.72	4.22	144.0	12.8	rusty specks	light
950	60	105	1.66	4.98	14.55	232	0.71	4.22	137.7	10.72	rusty specks	light
955	65	105	1.80	4.98	14.58	233	0.71	4.22	135.3	9.27	rusty specks	light

Constituents Sampled	Container	Number	Preservative
VOCs 8260B	40 mL VOAs	3	HCl
SVOCs 8270	1000 mL Amber	2	None
RCRA Metals 6010	500 mL Plastic	1	Nitric Acid
Dissolved Metals	500 mL Plastic	1	Nitric Acid

Well Information

Well Location:	See map	Well Locked at Arrival:	
Condition of Well:	Good	Well Locked at Departure:	
Well Completion:	Flush Mount	Key Number To Well:	---

NOTES: Turbidity (qualitative): cloudy

Well Casing Volumes

Gallons/Foot				
	1" = 0.04	1.5" = 0.09	2.5" = 0.26	6" = 1.47
	1.25" = 0.06	2" = 0.16	3" = 0.37	

ARCADIS

Groundwater Sampling Form

Project No. GP09HAFS.F39A.DG0FI | Well ID G4MW026 | Date 1/25/2011

Project Name/Location Hunter Stewart / Ft. Stewart, GA | Weather raining, cold

Measuring Pt. Description TOC | Screen Setting (ft-bmp) 9-19 | Casing Diameter (in.) 2" | Well Material X PVC, ___ SS, ___ Other

Total Depth (ft-bmp) 18.77 | Static Water Level (ft-bmp) 9.48 | Water Column 9.29 | Gallons in Well 1.5

Calc. Gallons Purged 4.5 | Pump Intake (ft-bmp) ~15 | Purge Method: PDB ___ Bladder ___ Disp. Bailer ___ Peristaltic X | Sample Method Low Flow

Gallons Purged 1.25 | MP Elevation ___

Sample Time: Label 1305 | Pump On/Off 1230/1305

Replicate/Code No. ___ | Sampled by J.Hanna

Time	Minutes Elapsed	Purge Rate (mL/min)	Gallons Purged	Depth to Water (ft)	Temp. (°C)	Cond. (µS/cm)	Dissolved Oxygen (mg/L)	pH	ORP (mV)	Turbidity (NTU)	Appearance	
											Color	Odor
1235	5	0.05	0.25	9.62	20.29	59	0.92	4.73	-11.0	11.5	clear	none
1240	10	0.05	0.5	9.73	20.25	59	0.90	4.74	-12.0	3.73	clear	none
1245	15	0.05	0.75	9.75	20.32	59	0.85	4.74	-13.0	2.19	clear	none
1250	20	0.05	1	9.80	20.37	59	0.82	4.73	-13.0	1.11	clear	none
1255	25	0.05	1.25	9.80	20.45	58	0.80	4.71	-13.0	0.97	clear	none

Constituents Sampled	Container	Number	Preservative
VOCs 8260B	40 mL VOAs	3	HCl
SVOCs 8270	1000 mL Amber	2	None
RCRA Metals 6010	500 mL Plastic	1	Nitric Acid
Dissolve Metals	1L Amber	1	None

Well Information

Well Location:	See map	Well Locked at Arrival:	
Condition of Well:	Good	Well Locked at Departure:	
Well Completion:	Flush Mount	Key Number To Well:	---

NOTES: Turbidity (qualitative): clear

Well Casing Volumes

Gallons/Foot				
	1" = 0.04	1.5" = 0.09	2.5" = 0.26	6" = 1.47
	1.25" = 0.06	2" = 0.16	3" = 0.37	

ARCADIS

Groundwater Sampling Form

Project No. GP09HAFS.F39A.DG0FI | Well ID G4MW027 | Date 1/27 /2011

Project Name/Location Hunter Stewart / Ft. Stewart, GA | Weather sunny, warm

Measuring Pt. Description TOC | Screen Setting (ft-bmp) 10-20 | Casing Diameter (in.) 2" | Well Material X PVC / SS / Other

Total Depth (ft-bmp) 20.19 | Static Water Level (ft-bmp) 5.85 | Water Column 14.34 | Gallons in Well 2.3

Calc. Gallons Purged 6.9 | Pump Intake (ft-bmp) ~15 | Purge Method: PDB / Bladder / Disp. Bailer / Peristaltic X | Sample Method Low Flow

Gallons Purged 1.25 | MP Elevation | Pump On/Off 1230/1310

Sample Time: Label 1310 | Replicate/Code No. | Sampled by J. Hanna

Time	Minutes Elapsed	Purge Rate (mL/min)	Gallons Purged	Depth to Water (ft)	Temp. (°C)	Cond. (µS/cm)	Dissolved Oxygen (mg/L)	pH	ORP (mV)	Turbidity (NTU)	Appearance	
											Color	Odor
1235	5	0.05	0.25	5.96	19.97	87	2.60	4.37	318.0	9.16	clear	none
1240	10	0.05	0.5	5.97	20.05	84	2.48	4.44	321.0	8.61	clear	none
1245	15	0.05	0.75	5.99	19.86	80	2.02	4.41	297.0	7.77	clear	none
1250	20	0.05	1	5.49	19.92	74	1.99	4.42	295.0	6.12	clear	none
1255	25	0.05	1.25	5.45	19.95	73	1.97	4.41	293.0	2.48	clear	none

Constituents Sampled	Container	Number	Preservative
VOCs 8260B	40 mL VOAs	3	HCl
SVOCs 8270	1000 mL Amber	2	None
RCRA Metals 6010	500 mL Plastic	1	Nitric Acid
Dissolved Metals	500 mL Plastic	1	Nitric Acid (field filtered)

Well Information

Well Location:	See map	Well Locked at Arrival:	
Condition of Well:	Good	Well Locked at Departure:	
Well Completion:	Flush Mount	Key Number To Well:	---

NOTES: Turbidity (qualitative): clear

Well Casing Volumes

Gallons/Foot				
	1" = 0.04	1.5" = 0.09	2.5" = 0.26	6" = 1.47
	1.25" = 0.06	2" = 0.16	3" = 0.37	

ARCADIS

Groundwater Sampling Form

Project No. GP09HAFS.F39A.DG0FI | Well ID G4MW028 | Date 1/25/2011

Project Name/Location Hunter Stewart / Ft. Stewart, GA | Weather raining, cold

Measuring Pt. Description TOC | Screen Setting (ft-bmp) 9-19 | Casing Diameter (in.) 2" | Well Material X PVC, ___ SS, ___ Other

Total Depth (ft-bmp) 18.78 | Static Water Level (ft-bmp) 6.68 | Water Column 12.1 | Gallons in Well 1.94

Calc. Gallons Purged 5.8 | Pump Intake (ft-bmp) ~15 | Purge Method: PDB ___, Bladder ___, Disp. Bailer ___, Peristaltic X | Sample Method Low Flow

Gallons Purged 1.25 | MP Elevation ___ | Pump On/Off 1330/1410

Sample Time: Label 1410 | Replicate/Code No. ___ | Sampled by J.Hanna

Time	Minutes Elapsed	Purge Rate (mL/min)	Gallons Purged	Depth to Water (ft)	Temp. (°C)	Cond. (µS/cm)	Dissolved Oxygen (mg/L)	pH	ORP (mV)	Turbidity (NTU)	Appearance	
											Color	Odor
1335	5	0.05	0.25	6.75	18.72	203	1.45	6.36	87.0	472	brown	none
1340	10	0.05	0.5	6.79	18.68	203	1.28	6.36	90.0	513	brown	none
1345	15	0.05	0.75	6.83	18.57	202	1.16	6.34	85.0	540	brown	none
1350	20	0.05	1	6.87	18.21	199	1.19	6.33	70.0	490	brown	none
1355	25	0.05	1.25	6.90	18.04	201	1.30	6.32	65.0	487	brown	none

Constituents Sampled	Container	Number	Preservative
VOCs 8260B	40 mL VOAs	3	HCl
SVOCs 8270	1000 mL Amber	2	None
RCRA Metals 6010	500 mL Plastic	1	Nitric Acid
Dissolved Metals	1L Amber	1	None

Well Information

Well Location:	See map	Well Locked at Arrival:	
Condition of Well:	Good	Well Locked at Departure:	
Well Completion:	Flush Mount	Key Number To Well:	---

NOTES: Turbidity (qualitative): high turbidity

Well Casing Volumes

Gallons/Foot				
	1" = 0.04	1.5" = 0.09	2.5" = 0.26	6" = 1.47
	1.25" = 0.06	2" = 0.16	3" = 0.37	

ARCADIS

Groundwater Sampling Form

Project No. GP09HAFS.F39A.DG0FI
Well ID G4MW029
Date 1/27/2011

Project Name/Location Hunter Stewart / Ft. Stewart, GA
Weather sunny, cold

Measuring Pt. Description TOC
Screen Setting (ft-bmp) 5-15
Casing Diameter (in.) 2"
Well Material X PVC / SS / Other

Total Depth (ft-bmp) 15
Static Water Level (ft-bmp) 8.07
Water Column
Gallons in Well

Calc. Gallons Purged
Pump Intake (ft-bmp)
Purge Method:
PDB
Bladder
Disp. Bailer
Peristaltic X
Sample Method Low Flow

Gallons Purged
MP Elevation

Pump On/Off 1435/1535

Sample Time: Label 1535
Replicate/Code No.
Sampled by C. Bell

Time	Minutes Elapsed	Purge Rate (mL/min)	Gallons Purged	Depth to Water (ft)	Temp. (°C)	Cond. (µS/cm)	Dissolved Oxygen (mg/L)	pH	ORP (mV)	Turbidity (NTU)	Appearance	
											Color	Odor
1440				8.30	17.99	154	2.75	5.76	39.2	54.7	clear brown	none
1445				8.32	18.11	154	2.48	5.76	30.6	55.5	clear brown	none
1450				8.30	17.89	150	1.55	5.75	80.1	47	clear brown	none
1455				8.29	17.95	149	0.80	5.75	57.4	45.7	clear brown	none
1500				8.30	17.53	146	0.66	5.74	46.9	44.1	clear brown	none
1520				8.30	17.51	147	0.70	5.74	42.1	43.3	clear brown	none
1530				8.30	17.71	147	0.59	5.73	43.1	41.3	clear brown	none
1530				8.29	17.81	147	0.53	5.73	42.9	41.6	clear brown	none
1535				8.29	17.86	147	0.54	5.73	42.1	41.9	clear brown	none

Constituents Sampled	Container	Number	Preservative
VOCs 8260B	40 mL VOAs	3	HCl
SVOCs 8270	1000 mL Amber	2	None
RCRA Metals 6010	500 mL Plastic	1	Nitric Acid
Dissolved Metals	500 mL Plastic	1	Nitric Acid

Well Information

Well Location: See map
Condition of Well: Good
Well Completion: Flush Mount
Well Locked at Arrival:
Well Locked at Departure:
Key Number To Well: ---

NOTES: Turbidity (qualitative): brown, clear

Well Casing Volumes

Gallons/Foot 1" = 0.04 1.5" = 0.09 2.5" = 0.26 6" = 1.47
1.25" = 0.06 2" = 0.16 3" = 0.37

ARCADIS

Groundwater Sampling Form

Project No. GP09HAFS.F39A.DG0FI
Well ID G4MW030
Date 1/26/2011

Project Name/Location Hunter Stewart / Ft. Stewart, GA
Weather dark, cool

Measuring Pt. Description TOC
Screen Setting (ft-bmp) 10-20
Casing Diameter (in.) 2"
Well Material X PVC; ___ SS; ___ Other

Total Depth (ft-bmp) 20
Static Water Level (ft-bmp) 6.9
Water Column 13.1
Gallons in Well

Calc. Gallons Purged
Pump Intake (ft-bmp) 15
Purge Method: PDB ___ Bladder ___ Disp. Bailer ___ Peristaltic X
Sample Method Low Flow

Gallons Purged 2.0
MP Elevation
Pump On/Off 1740/1815

Sample Time: Label 1815
Replicate/Code No.
Sampled by C. Bell

Time	Minutes Elapsed	Purge Rate (mL/min)	Gallons Purged	Depth to Water (ft)	Temp. (°C)	Cond. (µS/cm)	Dissolved Oxygen (mg/L)	pH	ORP (mV)	Turbidity (NTU)	Appearance	
											Color	Odor
1745	5	100	0.13	6.95	15.43	426	5.08	6.80	-46.8	0.11	clear	none
1800	10	100	0.26	6.98	16.13	472	1.30	6.87	-49.6	0.5	clear	none
1805	15	100	0.40	6.98	16.47	475	1.03	6.88	-71.8	0.46	clear	none
1810	20	100	0.53	6.98	16.54	479	0.99	6.88	-83.0	0.61	clear	none
1815	25	100	0.66	6.98	16.56	480	0.80	6.88	-88.8	0.53	clear	none

Constituents Sampled	Container	Number	Preservative
VOCs 8260B	40 mL VOAs	3	HCl
SVOCs 8270	1000 mL Amber	2	None
RCRA Metals 6010	500 mL Plastic	1	Nitric Acid
Dissolved Metals	500 mL Plastic	1	Nitric Acid

Well Information

Well Location: See map
Condition of Well: Good
Well Completion: Flush Mount
Well Locked at Arrival:
Well Locked at Departure:
Key Number To Well: ---

NOTES: Turbidity (qualitative): clear

Well Casing Volumes

Gallons/Foot				
	1" = 0.04	1.5" = 0.09	2.5" = 0.26	6" = 1.47
	1.25" = 0.06	2" = 0.16	3" = 0.37	

ARCADIS

Groundwater Sampling Form

Project No. GP09HAFS.F39A.DG0FI

Well ID G4MW031

Date 1/25 /2011

Project Name/Location Hunter Stewart / Ft. Stewart, GA

Weather rainy, cold

Measuring Pt. Description TOC

Screen Setting (ft-bmp) 10-20

Casing Diameter (in.) 2"

Well Material X PVC / SS / Other

Total Depth (ft-bmp) 20

Static Water Level (ft-bmp) 6.27

Water Column

Gallons in Well

Calc. Gallons Purged

Pump Intake (ft-bmp) 15

Purge Method: PDB / Bladder / Disp. Bailer / Peristaltic X

Sample Method Low Flow

Gallons Purged 3.0

MP Elevation

Pump On/Off 0944/

Sample Time: Label *Not Recorded by sampler

Replicate/Code No.

Sampled by C. Bell

Time	Minutes Elapsed	Purge Rate (mL/min)	Gallons Purged	Depth to Water (ft)	Temp. (°C)	Cond. (µS/cm)	Dissolved Oxygen (mg/L)	pH	ORP (mV)	Turbidity (NTU)	Appearance	
											Color	Odor
	5			6.30	19.74	0.050	2.73	5.16	86.3	6.98	clear	none
	10			6.31	19.96	0.042	2.42	5.05	77.8		clear	none
	15			6.31	19.93	0.040	2.53	5.02	71.0		clear	none
	20			6.31	19.92	0.039	2.11	4.99	69.9	6.75	clear	none
	25			6.31	19.90	0.038	2.00	4.90	50.0		clear	none
	30			6.34	19.92	0.037	1.74	4.88	-8.9		clear	none
	35			6.31	19.89	0.038	1.58	4.84	-40.4	4.26	clear	none
	40			6.32	19.82	0.088	1.45	5.02	-31.9	2.11	clear	none
	45			6.32	19.92	0.088	1.46	5.02	-47.0	1.24	clear	none
	50		3	6.32	19.90	0.088	1.31	4.95	-44.3	1.23	clear	none

Constituents Sampled	Container	Number	Preservative
VOCs 8260B	40 mL VOAs	3	HCl
SVOCs 8270	1000 mL Amber	2	None
Metals 6010	500 mL Plastic	1	Nitric Acid

Well Information

Well Location:	See map	Well Locked at Arrival:	No
Condition of Well:	Good	Well Locked at Departure:	No
Well Completion:	Flush Mount	Key Number To Well:	---

NOTES:

Well Casing Volumes

Gallons/Foot				
	1" = 0.04	1.5" = 0.09	2.5" = 0.26	6" = 1.47
	1.25" = 0.06	2" = 0.16	3" = 0.37	

ARCADIS

Groundwater Sampling Form

Project No. GP09HAFS.F39A.DG0FI Well ID G4MW032 Date 1/25/2011

Project Name/Location Hunter Stewart / Ft. Stewart, GA Weather rainy

Measuring Pt. Description TOC Screen Setting (ft-bmp) 35-45 Casing Diameter (in.) 2" Well Material X PVC / SS / Other

Total Depth (ft-bmp) 45 Static Water Level (ft-bmp) 5.91 Water Column 39.09 Gallons in Well 6.3

Calc. Gallons Purged Pump Intake (ft-bmp) Purge Method: PDB / Bladder / Disp. Bailer / Peristaltic X Sample Method Low Flow

Gallons Purged MP Elevation Pump On/Off ###

Sample Time: Label unknown Replicate/Code No. Sampled by C. Bell

Time	Minutes Elapsed	Purge Rate (mL/min)	Gallons Purged	Depth to Water (ft)	Temp. (°C)	Cond. (µS/cm)	Dissolved Oxygen (mg/L)	pH	ORP (mV)	Turbidity (NTU)	Appearance	
											Color	Odor
				6.31	18.92	1.499	1.80	6.86	-111.2		clear	none
				6.56	18.85	1.555	1.58	6.80	-115.2		clear	none
				6.95	19.68	1.603	1.16	6.69	-121.1		clear	none
				7.95	19.51	1.577	1.81	5.87	-111.1		clear	none
				7.95	19.50	1.561	0.79	5.86	-109.5		clear	none
				7.95	19.44	1.556	0.60	5.85	-108.6		clear	none
				7.90	20.41	1.402	0.68	5.96	-118.7		clear	none
				7.89	20.70	1.348	0.67	5.97	118.1		clear	none

Constituents Sampled	Container	Number	Preservative
VOCs 8260B	40 mL VOAs	3	HCl
SVOCs 8270	1000 mL Amber	2	None
Metals 6010	500 mL Plastic	1	Nitric Acid
Dissolvede Metals	1L Amber	1	none (lab filtered)

Well Information

Well Location:	See map	Well Locked at Arrival:	No
Condition of Well:	Good	Well Locked at Departure:	No
Well Completion:	Flush Mount	Key Number To Well:	---

NOTES: Turbidity (qualitative): clear

Well Casing Volumes

Gallons/Foot	1" = 0.04	1.5" = 0.09	2.5" = 0.26	6" = 1.47
	1.25" = 0.06	2" = 0.16	3" = 0.37	

ARCADIS

Groundwater Sampling Form

Project No. GP09HAFS.F39A.DG0FI

Well ID G4MW033

Date 1/27/2011

Project Name/Location Hunter Stewart / Ft. Stewart, GA

Weather sunny, ~35

Measuring Pt. Description TOC

Screen Setting (ft-bmp) 4.81-14.81

Casing Diameter (in.) 2"

Well Material X PVC / SS / Other

Total Depth (ft-bmp) 14.81

Static Water Level (ft-bmp) 4.35

Water Columr 10.46

Gallons in Well 1.7

Calc. Gallons Purged

Pump Intake (ft-bmp)

Purge Method: PDB / Bladder / Disp. Bailer / Peristaltic X

Sample Method Low Flow

Gallons Purged 2.6

MP Elevation

Pump On/Off 725/825

Sample Time: Label 830

Replicate/Code No.

Sampled by S. Schmid

Time	Minutes Elapsed	Purge Rate (mL/min)	Gallons Purged	Depth to Water (ft)	Temp. (°C)	Cond. (µS/cm)	Dissolved Oxygen (mg/L)	pH	ORP (mV)	Turbidity (NTU)	Appearance	
											Color	Odor
730	5	154	0.20	4.40	13.51	421	1.54	4.05	103.5	58.7	blue	yes-egg
735	10	154	0.41	4.40	13.33	381	1.34	4.19	39.3	41.1	blue	yes-egg
740	15	154	0.61	4.40	13.34	322	0.90	4.19	3.5	30.7	blue	yes-egg
745	20	154	0.81	4.41	13.72	319	0.88	4.25	-0.8	24.2	blue	yes-egg
750	25	154	1.02	4.41	13.97	317	0.78	4.25	-3.6	22.4	blue	yes-egg
755	30	154	1.22	4.41	14.15	316	0.67	4.24	-5.6	20.3	blue	yes-egg
800	35	154	1.42	4.41	14.07	315	0.61	4.27	-14.0	22.1	blue	yes-egg
805	40	154	1.63	4.41	14.16	320	0.51	4.20	-3.6	15.9	blue	yes-egg
810	45	170	1.85	4.42	14.54	322	0.46	4.13	-4.7	14.2	blue	yes-egg
815	50	170	2.08	4.42	14.98	324	0.48	4.21	-13.0	10.14	blue	yes-egg
820	55	200	2.34	4.42	14.99	323	0.45	4.24	-20.4	5.97	blue	yes-egg
825	60	200	2.61	4.42	14.99	322	0.42	4.24	-21.7	1.59	blue	yes-egg

Constituents Sampled	Container	Number	Preservative
VOCs 8260B	40 mL VOAs	3	HCl
SVOCs 8270	1000 mL Amber	2	None
RCRA Metals 6010	500 mL Plastic	1	Nitric Acid
Dissolved Metals	500 mL Plastic	1	Nitric Acid

Well Information

Well Location:	See map	Well Locked at Arrival:	No
Condition of Well:	Good	Well Locked at Departure:	No
Well Completion:	Flush Mount	Key Number To Well:	---

NOTES: Turbidity (qualitative): clear

Well Casing Volumes

Gallons/Foot				
	1" = 0.04	1.5" = 0.09	2.5" = 0.26	6" = 1.47
	1.25" = 0.06	2" = 0.16	3" = 0.37	

ARCADIS

Groundwater Sampling Form

Project No. GP09HAFS.F39A.DG0FI | Well ID G4MW034 | Date 1/26/2011

Project Name/Location Hunter Stewart / Ft. Stewart, GA | Weather windy, cold, clear

Measuring Pt. Description TOC | Screen Setting (ft-bmp) 40-45 | Casing Diameter (in.) 2" | Well Material X PVC / SS / Other

Total Depth (ft-bmp) 45.14 | Static Water Level (ft-bmp) 3.61 | Water Column 41.53 | Gallons in Well 6.6

Calc. Gallons Purged 19.9 | Pump Intake (ft-bmp) | Purge Method: PDB / Bladder / Disp. Bailer / Peristaltic X | Sample Method Low Flow

Gallons Purged 1.3 | MP Elevation | Pump On/Off 1740/1815

Sample Time: Label 1815 | Replicate/Code No. | Sampled by J.Hanna

Time	Minutes Elapsed	Purge Rate (mL/min)	Gallons Purged	Depth to Water (ft)	Temp. (°C)	Cond. (µS/cm)	Dissolved Oxygen (mg/L)	pH	ORP (mV)	Turbidity (NTU)	Appearance	
											Color	Odor
1745	5	0.05	0.25	3.89	18.12	492	0.66	7.33	-111.0	error	brown	none
1750	10	0.05	0.5	3.90	18.08	492	0.60	7.32	-112.0	error	brown	none
1755	15	0.05	0.75	3.90	18.12	492	0.71	7.33	-112.0	131	brown	none
1800	20	0.05	1	3.91	18.13	492	0.73	7.32	-113.0	124	brown	none
1805	25	0.05	1.25	3.92	18.16	492	0.76	7.33	-113.0	113	brown	none

Constituents Sampled	Container	Number	Preservative
VOCs 8260B	40 mL VOAs	3	HCl
SVOCs 8270	1000 mL Amber	2	None
RCRA Metals 6010	500 mL Plastic	1	Nitric Acid
Dissolved Metals	500 mL Plastic	1	Nitric Acid (field filtered)

Well Information

Well Location:	See map	Well Locked at Arrival:	No
Condition of Well:	Good	Well Locked at Departure:	No
Well Completion:	Flush Mount	Key Number To Well:	---

NOTES: Turbidity (qualitative): clear

Well Casing Volumes

Gallons/Foot				
	1" = 0.04	1.5" = 0.09	2.5" = 0.26	6" = 1.47
	1.25" = 0.06	2" = 0.16	3" = 0.37	

ARCADIS

Groundwater Sampling Form

Project No. GP09HAFS.F39A.DG0FI | Well ID G4MW035 | Date 1/26/2011

Project Name/Location Hunter Stewart / Ft. Stewart, GA | Weather WINDY, COLD, CLEAR

Measuring Pt. Description TOC | Screen Setting (ft-bmp) 6-16 | Casing Diameter (in.) 2" | Well Material X PVC; ___ SS; ___ Other

Total Depth (ft-bmp) 16.07 | Static Water Level (ft-bmp) 5.11 | Water Column 10.96 | Gallons in Well 1.8

Calc. Gallons Purged 5.3 | Pump Intake (ft-bmp) ~13 | Purge Method: PDB ___ Bladder ___ Disp. Bailer ___ Peristaltic X | Sample Method Low Flow

Gallons Purged 1.3 | MP Elevation ___ | Pump On/Off 1830/1905

Sample Time: Label 1905 | Replicate/Code No. ___ | Sampled by J. Hanna

Time	Minutes Elapsed	Purge Rate (mL/min)	Gallons Purged	Depth to Water (ft)	Temp. (°C)	Cond. (µS/cm)	Dissolved Oxygen (mg/L)	pH	ORP (mV)	Turbidity (NTU)	Appearance	
											Color	Odor
1835	5	0.05	0.25	5.16	16.71	354	0.41	5.70	123.0	error	brown	None
1840	10	0.05	0.5	5.16	16.83	343	0.40	5.62	133.0	error	brown	None
1845	15	0.05	0.75	5.16	16.86	329	0.48	5.43	138.0	765.00	brown	None
1850	20	0.05	1	5.16	16.94	328	0.49	5.40	138.0	777.00	brown	None
1855	25	0.05	1.25	5.16	16.91	326	0.52	5.39	140.0	784.00	brown	None

Constituents Sampled	Container	Number	Preservative
VOCs 8260B	40 mL VOAs	3	HCl
SVOCs 8270	1000 mL Amber	2	None
RCRA Metals 6010	500 mL Plastic	1	Nitric Acid
Dissolved Metals	500 mL Plastic	1	Nitric Acid (field filtered)

Well Information

Well Location:	See map	Well Locked at Arrival:	No
Condition of Well:	Good	Well Locked at Departure:	No
Well Completion:	Flush Mount	Key Number To Well:	---

NOTES: Turbidity (qualitative): clear

Well Casing Volumes

Gallons/Foot				
	1" = 0.04	1.5" = 0.09	2.5" = 0.26	6" = 1.47
	1.25" = 0.06	2" = 0.16	3" = 0.37	

ARCADIS

Groundwater Sampling Form

Project No. GP09HAFS.F39A.DG0FI Well ID G4MW036 Date 1/27/2011

Project Name/Location Hunter Stewart / Ft. Stewart, GA Weather cloudy, 50s

Measuring Pt. Description TOC Screen Setting (ft-bmp) 10-44.95 Casing Diameter (in.) 2" Well Material X PVC / SS / Other

Total Depth (ft-bmp) 44.95 Static Water Level (ft-bmp) 8.7 Water Column 36.25 Gallons in Well 5.8

Calc. Gallons Purged Pump Intake (ft-bmp) Purge Method: PDB / Bladder / Disp. Bailer / Peristaltic X Sample Method Low Flow

Gallons Purged 17.5 MP Elevation Pump On/Off 1645/1820

Sample Time: Label 1830 Replicate/Code No. Sampled by S.Schmid

Time	Minutes Elapsed	Purge Rate (mL/min)	Gallons Purged	Depth to Water (ft)	Temp. (°C)	Cond. (µS/cm)	Dissolved Oxygen (mg/L)	pH	ORP (mV)	Turbidity (NTU)	Appearance	
											Color	Odor
1650	5	0.44	0.15	9.53	17.57	2671	5.74	3.44	361.8	5.21	none	none
1700	7	0.45	0.06	14.69	20.42	3061	3.67	3.21	593.8	75.90	none	none
1710	17	0.45	2.80	19.28	21.09	3254	2.41	3.05	504.2	52.70	none	none
1720	27	0.45	4.90	22.80	21.14	2860	1.86	3.39	381.4	24.30	none	none
1730	37	0.46	7.00	23.70	21.06	2430	1.34	3.82	212.3	8.65	none	none
1740	47	0.46	9.10	26.80	21.09	2960	0.28	3.84	114.3	19.70	none	none
1750	57	0.46	11.20	27.65	20.90	2972	0.26	3.85	80.7	13.20	none	none
1800	67	0.48	13.30	27.98	21.14	2977	0.24	3.84	60.8	7.71	none	none
1810	77	0.48	15.40	28.05	21.12	2977	0.21	3.84	49.9	3.13	none	none
1815	82	0.48	17.50	28.15	21.07	2971	0.21	3.84	44.5	2.10	none	none
1820	87	0.48	16.40	28.12	21.12	2972	0.22	3.84	48.8	3.06	none	none

Constituents Sampled	Container	Number	Preservative
VOCs 8260B	40 mL VOAs	3	HCl
SVOCs 8270	1000 mL Amber	2	None
RCRA Metals 6010	500 mL Plastic	1	Nitric Acid
Dissolved Metals	500 mL Plastic	1	Nitric Acid (field filtered)

Well Information

Well Location:	See map	Well Locked at Arrival:	No
Condition of Well:	Good	Well Locked at Departure:	No
Well Completion:	Flush Mount	Key Number To Well:	---

NOTES: Turbidity (qualitative): clear

Well Casing Volumes

Gallons/Foot	1" = 0.04	1.5" = 0.09	2.5" = 0.26	6" = 1.47
	1.25" = 0.06	2" = 0.16	3" = 0.37	

ARCADIS

Groundwater Sampling Form

Project No. GP09HAFS.F39A.DG0FI | Well ID G4MW037 | Date 1/27 2011

Project Name/Location Hunter Stewart / Ft. Stewart, GA | Weather sunny, cold

Measuring Pt. Description TOC | Screen Setting (ft-bmp) 4.5-44.5 | Casing Diameter (in.) 2" | Well Material X PVC / SS / Other

Total Depth (ft-bmp) 44.44 | Static Water Level (ft-bmp) 6.15 | Water Column 38.29 | Gallons in Well 6.1

Calc. Gallons Purged 18.4 | Pump Intake (ft-bmp) | Purge Method: PDB / Bladder / Disp. Bailer / Peristaltic X | Sample Method Low Flow

Gallons Purged 1.3 | MP Elevation | Pump On/Off 1130/1210

Sample Time: Label 1210 | Replicate/Code No. | Sampled by J.Hanna

Time	Minutes Elapsed	Purge Rate (mL/min)	Gallons Purged	Depth to Water (ft)	Temp. (°C)	Cond. (µS/cm)	Dissolved Oxygen (mg/L)	pH	ORP (mV)	Turbidity (NTU)	Appearance	
											Color	Odor
1135	5	0.05	0.25	6.31	error	1056	0.96	4.43	185.0	error	brown	none
1140	10	0.05	0.5	6.33	error	1057	0.75	4.42	175.0	error	brown	none
1145	15	0.05	0.75	6.36	59.10	1079	0.82	4.40	168.0	59.10	brown	none
1150	20	0.05	1	6.38	51.70	1080	0.85	4.38	160.0	51.70	brown	none
1155	25	0.05	1.25	6.40	44.60	1087	0.86	4.41	159.0	44.60	brown	none

Constituents Sampled	Container	Number	Preservative
VOCs 8260B	40 mL VOAs	3	HCl
SVOCs 8270	1000 mL Amber	2	None
RCRA Metals 6010	500 mL Plastic	1	Nitric Acid
Dissolved Metals	500 mL Plastic	1	Nitric Acid (field filtered)

Well Information

Well Location:	See map	Well Locked at Arrival:	No
Condition of Well:	Good	Well Locked at Departure:	No
Well Completion:	Flush Mount	Key Number To Well:	---

NOTES: Turbidity (qualitative): clear

Well Casing Volumes

Gallons/Foot	1" = 0.04	1.5" = 0.09	2.5" = 0.26	6" = 1.47
	1.25" = 0.06	2" = 0.16	3" = 0.37	

ARCADIS

Groundwater Sampling Form

Project No. GP09HAFS.F39A.DG0FI | Well ID G4MW038 | Date 1/26/2011

Project Name/Location Hunter Stewart / Ft. Stewart, GA | Weather windy, cold

Measuring Pt. Description TOC | Screen Setting (ft-bmp) 35-45 | Casing Diameter (in.) 2" | Well Material X PVC, ___ SS, ___ Other

Total Depth (ft-bmp) 45 | Static Water Level (ft-bmp) 9.61 | Water Column 35.39 | Gallons in Well 5.7

Calc. Gallons Purged 17.0 | Pump Intake (ft-bmp) 40 | Purge Method: PDB ___, Bladder ___, Disp. Bailer ___, Peristaltic X | Sample Method Low Flow

Gallons Purged 17.0 | MP Elevation ___ | Pump On/Off 1218/1430

Sample Time: Label 1431 | Replicate/Code No. ___ | Sampled by C. Bell

Time	Minutes Elapsed	Purge Rate (mL/min)	Gallons Purged	Depth to Water (ft)	Temp. (°C)	Cond. (µS/cm)	Dissolved Oxygen (mg/L)	pH	ORP (mV)	Turbidity (NTU)	Appearance	
											Color	Odor
1224	6	0.26	0.16	10.87	17.70	84	2.20	4.98	42.5	798.00	green	none
1230	12	0.26	0.32	11.50	18.70	57	1.68	4.94	5.0	761.00	green	none
1251	33		1.50	13.60	21.41	46	0.59	4.92	-62.8	705.00	green	none
1257	39	0.20	2.5	22.70	20.59	45	1.33	4.69	62.6	47.00	green	none
1317	59	0.20	7.00	23.90	21.42	47	0.36	4.97	-72.1	771.00	green	none
1345		0.20	10	25.20	21.05	48	0.24	4.95	-83.3	>800	green	none
1352		0.20	11.00	25.34	21.30	48	0.23	4.94	-82.8	>800	green	none
1359		0.20	12	25.36	21.15	48	0.22	4.95	-88.4	>800	green	none
1408		0.20	14.00	25.42	21.06	48	0.68	4.96	-97.2	>800	green	none
1415		0.20	15	24.95	21.09	48	0.23	4.97	-100.5	799.00	green	none
1420		0.53	log not legible	22.75	19.37	46	0.24	4.99	-91.6	788.00	green	none
1425		0.53	16.5	22.25	19.41	46	0.22	4.91	-80.7	781.00	green	none
1430		0.53	17		19.59	46	0.22	4.94	-81.2	790.00	green	none

Constituents Sampled	Container	Number	Preservative
VOCs 8260B	40 mL VOAs	3	HCl
SVOCs 8270	1000 mL Amber	2	None
RCRA Metals 6010	500 mL Plastic	1	Nitric Acid
BIOGEO	various bottles	1	

Well Information

Well Location:	See map	Well Locked at Arrival:	No
Condition of Well:	Good	Well Locked at Departure:	No
Well Completion:	Flush Mount	Key Number To Well:	---

NOTES: Turbidity (qualitative): clear

Well Casing Volumes

Gallons/Foot				
	1" = 0.04	1.5" = 0.09	2.5" = 0.26	6" = 1.47
	1.25" = 0.06	2" = 0.16	3" = 0.37	

ARCADIS

Groundwater Sampling Form

Project No. GP09HAFS.F39A.DG0FI | Well ID G4MW039 | Date 1/26/2011

Project Name/Location Hunter Stewart / Ft. Stewart, GA | Weather dark, cold

Measuring Pt. Description TOC | Screen Setting (ft-bmp) 35-45 | Casing Diameter (in.) 2" | Well Material X PVC, ___ SS, ___ Other

Total Depth (ft-bmp) 45 | Static Water Level (ft-bmp) 8.04 | Water Column 36.94 | Gallons in Well 5.9

Calc. Gallons Purged 18.0 | Pump Intake (ft-bmp) 40 | Purge Method: PDB ___, Bladder ___, Disp. Bailer ___, Peristaltic X | Sample Method Low Flow

Gallons Purged 19.5 | MP Elevation ___ | Pump On/Off 1845/2026

Sample Time: Label 1830 | Replicate/Code No. ___ | Sampled by C. Bell

Time	Minutes Elapsed	Purge Rate (gal/min)	Gallons Purged	Depth to Water (ft)	Temp. (°C)	Cond. (µS/cm)	Dissolved Oxygen (mg/L)	pH	ORP (mV)	Turbidity (NTU)	Appearance	
											Color	Odor
1850	10	0.26	0.26	9.01	20.31	518	1.43	5.63	87.2	>800	milky turbid	none
1900	20	0.20	2	17.95	20.35	525	1.47	5.65	84.1	>800	milky turbid	none
1940	60	0.20	10.00	21.90	20.48	516	1.43	5.51	-28.8	>800	milky turbid	none
2000	80	0.20	14	22.21	20.63	500	0.57	5.37	-48.6	>800	milky turbid	none
2005	85	0.20	15.00	22.22	20.61	497	0.30	5.34	-43.9	>800	milky turbid	none
2010	90	0.20	16	22.26	20.43	491	0.27	5.31	-56.2	798.00	milky turbid	none
2015	95	0.20	17.00	22.30	20.42	487	0.23	5.28	-66.5	>800	milky turbid	none
2020	100	0.20	18	22.31	20.65	485	0.20	5.22	-69.3	799.00	milky turbid	none
2023	103	0.20	18.50	20.32	20.69	484	0.20	5.21	-66.5	786.00	milky turbid	none
2026	106	0.20	19	20.34	20.67	483	0.20	5.20	-66.9	791.00	milky turbid	none

Constituents Sampled	Container	Number	Preservative
VOCs 8260B	40 mL VOAs	3	HCl
SVOCs 8270	1000 mL Amber	2	None
RCRA Metals 6010	500 mL Plastic	1	Nitric Acid
Dissolved Metals	500 mL Plastic	1	Nitric Acid (field filtered)

Well Information

Well Location:	See map	Well Locked at Arrival:	No
Condition of Well:	Good	Well Locked at Departure:	No
Well Completion:	Flush Mount	Key Number To Well:	---

NOTES: Turbidity (qualitative): clear

Well Casing Volumes

Gallons/Foot				
	1" = 0.04	1.5" = 0.09	2.5" = 0.26	6" = 1.47
	1.25" = 0.06	2" = 0.16	3" = 0.37	

ARCADIS

Groundwater Sampling Form

Project No. GP09HAFS.F39A.DG0FI | Well ID G4MW040(1) | Date 1/27/2011

Project Name/Location Hunter Stewart / Ft. Stewart, GA | Weather Sunny, warm

Measuring Pt. Description TOC | Screen Setting (ft-bmp) 35-44.94 | Casing Diameter (in.) 2" | Well Material X PVC / SS / Other

Total Depth (ft-bmp) 44.94 | Static Water Level (ft-bmp) 7.63 | Water Column 37.31 | Gallons in Well 5.97

Calc. Gallons Purged | Pump Intake (ft-bmp) 40 | Purge Method: PDB / Bladder / Disp. Bailer / Peristaltic X | Sample Method Low Flow

Gallons Purged 30.6 | MP Elevation | Pump On/Off 1155/1515

Sample Time: Label unknown | Replicate/Code No. | Sampled by S.Schmid

Time	Minutes Elapsed	Purge Rate (mL/min)	Gallons Purged	Depth to Water (ft)	Temp. (°C)	Cond. (µS/cm)	Dissolved Oxygen (mg/L)	pH	ORP (mV)	Turbidity (NTU)	Appearance	
											Color	Odor
1200	5	90.00	450mL	8.14	18.38	286	4.56	5.29	4.6	637.00	green brown	light
1205	10	360.00	2250mL	11.09	16.75	325	4.36	6.09	5.0	30.30	green brown	light
1210	15	360.00	4050mL	11.86	18.67	324	3.49	6.33	35.3	10.44	green brown	light
1215	20	360.00	5850mL	12.55	20.69	328	3.39	6.43	41.6	8.36	green brown	light
1220	25	650.00	9100mL	14.92	20.69	328	3.28	6.42	43.8	5.30	green brown	light
1225	30	650	3.3	16.81	20.85	352	3.11	6.35	54.5	2.11	green brown	light
1230	35	650	4.20	18.40	21.02	325	0.66	5.21	-12.8	>1000	green brown	light
1240	45	650	5.9	19.54	20.92	337	0.48	5.16	-13.7	>1000	green brown	light
1250	55	650	7.60	20.26	20.87	340	0.46	5.19	-15.6	>1000	green brown	light
1325	55	800	7.6	11.46	21.31	365	0.35	5.05	-52.3	>1000	green brown	light
1335	65	800	9.7	18.49	21.16	373	0.26	5.03	-48.4	>1000	green brown	light
1345	75	800	11.8	21.35	21.09	393	0.49	5.07	-41.2	>1000	green brown	light
1355	85	800	14	21.82	21.17	395	0.30	4.96	-38.4	>1000	green brown	light
1405	95	200	15.4	18.71	19.78	401	0.19	4.97	-48.3	>1000	green brown	light
1410	100	800	16.5	20.28	21.07	407	0.19	4.94	-54.4	>1000	green brown	light
1415	105	800.00	17.60	21.03	21.19	412	0.17	4.93	-59.6	>1000	green	light
1420	110	800.00	18.7	21.53	21.09	413	0.19	4.93	-58.9	>1000	green	light

Constituents Sampled	Container	Number	Preservative
VOCs 8260B	40 mL VOAs	3	HCl
SVOCs 8270	1000 mL Amber	2	None
RCRA Metals 6010	500 mL Plastic	1	Nitric Acid
Dissolved Metals	500 mL Plastic	1	none
Alk, NO2, NO3, Cl, SO4	501 mL Plastic	1	none
TOC	250 mL Plastic	1	H2SO4
Dissolved Gases	40 mL Amber	2	BAR

Well Information

Well Location:	See map	Well Locked at Arrival:	No
Condition of Well:	Good	Well Locked at Departure:	No
Well Completion:	Flush Mount	Key Number To Well:	---

NOTES:

Well Casing Volumes

Gallons/Foot				
	1" = 0.04	1.5" = 0.09	2.5" = 0.26	6" = 1.47
	1.25" = 0.06	2" = 0.16	3" = 0.37	

ARCADIS

Groundwater Sampling Form

Project No. GP09HAFS.F39A.DG0FI | Well ID G4MW040(1) | Date 1/27/2011

Project Name/Location Hunter Stewart / Ft. Stewart, GA | Weather Sunny, warm

Measuring Pt. Description TOC | Screen Setting (ft-bmp) 35-44.94 | Casing Diameter (in.) 2" | Well Material X PVC, ___ SS, ___ Other

Total Depth (ft-bmp) 44.94 | Static Water Level (ft-bmp) 7.63 | Water Column 37.31 | Gallons in Well 5.97

Calc. Gallons Purged ___ | Pump Intake (ft-bmp) 40 | Purge Method: PDB ___, Bladder ___, Disp. Bailer ___, Peristaltic X | Sample Method Low Flow

Gallons Purged 30.6 | MP Elevation ___ | Pump On/Off 1155/1515

Sample Time: Label unknown | Replicate/Code No. ___ | Sampled by S.Schmid

Time	Minutes Elapsed	Purge Rate (mL/min)	Gallons Purged	Depth to Water (ft)	Temp. (°C)	Cond. (µS/cm)	Dissolved Oxygen (mg/L)	pH	ORP (mV)	Turbidity (NTU)	Appearance	
											Color	Odor
1425	115	800.00	19.80	21.92	21.17	415	0.19	4.92	-60.9	>1000	green	light
1430	120	800.00	20.9	22.01	20.95	417	0.20	4.92	-55.3	>1000	green	light
1435	135	800.00	22.00	22.34	20.87	419	0.24	4.91	-49.8	>1000	green	light
1445	145	800.00	24.1	22.41	20.81	420	0.31	4.90	-61.7	>1000	green	light
1455	155	800.00	26.30	22.56	21.03	422	0.28	4.89	-68.3	>1000	green	light
1505	165	800.00	28.4	22.67	21.15	425	0.23	4.87	-72.9	784.00	green	light
1510	170	800.00	29.50	22.73	21.01	426	0.24	4.87	-73.3	714.00	green	light
1515	175	800.00	30.6	22.79	21.05	428	0.23	4.86	-74.5	685.00	green	light

Constituents Sampled	Container	Number	Preservative
VOCs 8260B	40 mL VOAs	3	HCl
SVOCs 8270	1000 mL Amber	2	None
RCRA Metals 6010	500 mL Plastic	1	Nitric Acid
Dissolved Metals	500 mL Plastic	1	none
Alk, NO2, NO3, Cl, SO4	501 mL Plastic	1	none
TOC	250 mL Plastic	1	H2SO4
Dissolved Gases	40 mL Amber	2	BAR

Well Information

Well Location:	See map	Well Locked at Arrival:	No
Condition of Well:	Good	Well Locked at Departure:	No
Well Completion:	Flush Mount	Key Number To Well:	---

NOTES:

Well Casing Volumes

Gallons/Foot	1" = 0.04	1.5" = 0.09	2.5" = 0.26	6" = 1.47
	1.25" = 0.06	2" = 0.16	3" = 0.37	

ARCADIS

Groundwater Sampling Form

Project No. GP09HAFS.F39A.DG0FI | Well ID G4MW041 | Date 1/27/2011

Project Name/Location Hunter Stewart / Ft. Stewart, GA | Weather cloudy, cold

Measuring Pt. Description TOC | Screen Setting (ft-bmp) 35-45 | Casing Diameter (in.) 2" | Well Material X PVC, ___ SS, ___ Other

Total Depth (ft-bmp) 45 | Static Water Level (ft-bmp) 7.62 | Water Column 37.38 | Gallons in Well 6.0

Calc. Gallons Purged 17.9 | Pump Intake (ft-bmp) 40 | Purge Method: PDB ___ Bladder ___ Disp. Bailer ___ Peristaltic X | Sample Method Low Flow

Gallons Purged ___ | MP Elevation ___ | Pump On/Off 1650/1945

Sample Time: Label 1945 | Replicate/Code No. ___ | Sampled by C. Bell

Time	Minutes Elapsed	Purge Rate (mL/min)	Gallons Purged	Depth to Water (ft)	Temp. (°C)	Cond. (µS/cm)	Dissolved Oxygen (mg/L)	pH	ORP (mV)	Turbidity (NTU)	Appearance	
											Color	Odor
1705	15	100.00		9.92	20.15	176	2.94	4.85	27.8	73.70	white	none
1716	26	100.00		10.94	20.18	170	2.28	4.84	0.5	42.10	white	none
1719	29	0.20		17.50	21.46	171	2.35	4.82	7.0	42.00	white	none
1727	37	0.20	8	17.51	21.47	173	1.89	4.79	147.3	37.80	white	none
1812	53	0.20	12.00	19.68	21.36	167	0.36	4.79	-52.1	37.10	white	none
1825	64	0.20	14	19.69	21.30	167	0.24	4.79	-61.8	44.20	white	none
1835	76	0.20	15.00	19.71	21.31	166	0.23	4.80	-70.6	39.50	white	none
1840	81	0.20	16	19.72	21.28	166	0.22	4.82	-74.7	35.80	white	none
1845	86	0.20	17.00	19.74	21.14	165	0.22	4.82	-76.1	32.90	white	none
1850	91	0.20	18	19.79	21.29	164	0.21	4.81	-78.7	29.30	white	none
1853	94	0.20		19.77	21.20	164	0.22	4.81	-79.9	25.10	white	none
1907		0.20		19.75	21.31	163	0.20	4.81	-85.2	16.40	white	none
1919		0.20		19.74	21.32	162	0.20	4.81	-85.5	12.80	white	none
1930		0.20		19.75	21.27	162	0.21	4.80	-86.5	10	white	none
1945		0.20		19.78	21.30	162	0.21	4.80	-85.7	8.8	white	none

Constituents Sampled	Container	Number	Preservative
VOCs 8260B	40 mL VOAs	3	HCl
SVOCs 8270	1000 mL Amber	2	None
RCRA Metals 6010	500 mL Plastic	1	Nitric Acid
Dissolved Metals	500 mL Plastic	1	Nitric Acid (field filtered)

Well Information

Well Location:	See map	Well Locked at Arrival:	No
Condition of Well:	Good	Well Locked at Departure:	No
Well Completion:	Flush Mount	Key Number To Well:	---

NOTES:

Well Casing Volumes

Gallons/Foot	1" = 0.04	1.5" = 0.09		6" = 1.47
	1.25" = 0.06	2" = 0.16	2.5" = 0.26	
			3" = 0.37	

ARCADIS

Groundwater Sampling Form

Project No. GP09HAFS.F39A.DG0FI

Well ID G4MW042

Date 1/26/2011

Project Name/Location Hunter Stewart / Ft. Stewart, GA

Weather windy, cold, p. cloudy

Measuring Pt. Description TOC

Screen Setting (ft-bmp) 35-45

Casing Diameter (in.) 2"

Well Material X PVC; ___ SS; ___ Other

Total Depth (ft-bmp) 48.3

Static Water Level (ft-bmp) 9.81

Water Column 38.49

Gallons in Well 6.2

Calc. Gallons Purged 18.5

Pump Intake (ft-bmp) 40

Purge Method: PDB ___; Bladder ___; Disp. Bailer ___; Peristaltic X

Sample Method Low Flow

Gallons Purged ~20

MP Elevation ___

Pump On/Off 1050/1240

Sample Time: Label 1240

Replicate/Code No. ___

Sampled by J. Hanna

Time	Minutes Elapsed	Purge Rate (mL/min)	Gallons Purged	Depth to Water (ft)	Temp. (°C)	Cond. (µS/cm)	Dissolved Oxygen (mg/L)	pH	ORP (mV)	Turbidity (NTU)	Appearance	
											Color	Odor
1120	30	0.20	6.00	10.35	18.23	585	2.94	6.99	-75.0	33.20	yellow/clear	none
1150	60	0.20	12	15.80	20.39	590	0.25	7.27	-122.0	7.59	yellow/clear	none
1220	90	0.20	18.00	15.85	20.44	587	0.15	7.28	-106.0	3.90	yellow/clear	none
1225	95	0.20	19	15.85	20.43	582	0.18	7.26	-128.0	2.86	yellow/clear	none
1230	100	0.20	20.00	15.85	20.44	582	0.17	7.26	-130.0	2.11	yellow/clear	none

Constituents Sampled	Container	Number	Preservative
VOCs 8260B	40 mL VOAs	3	HCl
SVOCs 8270	1000 mL Amber	2	None
RCRA Metals 6010	500 mL Plastic	1	Nitric Acid
BIOGEO	Various bottles		various

Well Information

Well Location:	See map	Well Locked at Arrival:	No
Condition of Well:	Good	Well Locked at Departure:	No
Well Completion:	Flush Mount	Key Number To Well:	---

NOTES:

Well Casing Volumes

Gallons/Foot				
	1" = 0.04	1.5" = 0.09	2.5" = 0.26	6" = 1.47
	1.25" = 0.06	2" = 0.16	3" = 0.37	

ARCADIS

Groundwater Sampling Form

Project No. GP09HAFS.F39A.DG0FI | Well ID G4MW043 | Date 1/27/2011

Project Name/Location Hunter Stewart / Ft. Stewart, GA | Weather sunny, cold

Measuring Pt. Description TOC | Screen Setting (ft-bmp) 14-24 | Casing Diameter (in.) 2" | Well Material X PVC, ___ SS, ___ Other

Total Depth (ft-bmp) 28.2 | Static Water Level (ft-bmp) 8.92 | Water Column 19.28 | Gallons in Well 3.1

Calc. Gallons Purged 9.2 | Pump Intake (ft-bmp) ~19 | Purge Method: PDB ___, Bladder ___, Disp. Bailer ___, Peristaltic X | Sample Method Low Flow

Gallons Purged 1.3 | MP Elevation ___ | Pump On/Off 0935/1040

Sample Time: Label 1040 | Replicate/Code No. ___ | Sampled by J. Hanna

Time	Minutes Elapsed	Purge Rate (mL/min)	Gallons Purged	Depth to Water (ft)	Temp. (°C)	Cond. (µS/cm)	Dissolved Oxygen (mg/L)	pH	ORP (mV)	Turbidity (NTU)	Appearance	
											Color	Odor
940	5	0.05	0.25	9.13	17.10	501	1.02	7.00	-134.0	6.86	clear	none
945	10	0.05	0.5	9.14	17.01	504	0.78	7.16	-137.0	4.67	clear	none
950	15	0.05	0.75	9.14	17.09	505	0.60	7.25	-141.0	2.21	clear	none
955	20	0.05	1	9.14	17.04	506	0.54	7.26	-142.0	1.17	clear	none
1000	25	0.05	1.25	9.14	17.07	506	0.53	7.26	-142.0	0.97	clear	none

Constituents Sampled	Container	Number	Preservative
VOCs 8260B	40 mL VOAs	3	HCl
SVOCs 8270	1000 mL Amber	2	None
RCRA Metals 6010	500 mL Plastic	1	Nitric Acid
Dissolved Metals	500 mL Plastic	1	Nitric Acid (field filtered)

Well Information

Well Location:	See map	Well Locked at Arrival:	No
Condition of Well:	Good	Well Locked at Departure:	No
Well Completion:	Flush Mount	Key Number To Well:	---

NOTES:

Well Casing Volumes

Gallons/Foot	1" = 0.04	1.5" = 0.09	2.5" = 0.26	6" = 1.47
	1.25" = 0.06	2" = 0.16	3" = 0.37	

ARCADIS

Groundwater Sampling Form

Project No. GP09HAFS.F39A.DG0FI | Well ID G4MW044 | Date 1/26/2011

Project Name/Location Hunter Stewart / Ft. Stewart, GA | Weather windy, cold, p.cloudy

Measuring Pt. Description TOC | Screen Setting (ft-bmp) 4.5-14.5 | Casing Diameter (in.) 2" | Well Material X PVC / SS / Other

Total Depth (ft-bmp) 17.94 | Static Water Level (ft-bmp) 11.09 | Water Columr 6.85 | Gallons in Well 1.1

Calc. Gallons Purged 1.2 | Pump Intake (ft-bmp) 10 | Purge Method: PDB / Bladder / Disp. Bailer / Peristaltic X | Sample Method Low Flow

Gallons Purged 1.3 | MP Elevation | Pump On/Off 1600/1630

Sample Time: Label 1630 | Replicate/Code No. | Sampled by J. Hanna

Time	Minutes Elapsed	Purge Rate (mL/min)	Gallons Purged	Depth to Water (ft)	Temp. (°C)	Cond. (µS/cm)	Dissolved Oxygen (mg/L)	pH	ORP (mV)	Turbidity (NTU)	Appearance	
											Color	Odor
1605	5	0.05	0.25	11.11	19.43	214	1.47	5.49	-9.0	19.90	clear	yes
1610	10	0.05	0.5	11.12	19.43	209	0.95	5.46	-20.0	10.93	clear	yes
1615	15	0.05	0.75	11.12	19.57	205	0.26	5.43	-28.0	8.72	clear	yes
1620	20	0.05	1	11.12	19.53	204	0.73	5.43	-30.0	6.69	clear	yes
1625	25	0.05	1.25	11.12	19.50	203	0.79	5.43	-30.0	6.13	clear	yes

Constituents Sampled	Container	Number	Preservative
VOCs 8260B	40 mL VOAs	3	HCl
SVOCs 8270	1000 mL Amber	2	None
RCRA Metals 6010	500 mL Plastic	1	Nitric Acid
Dissolved Metals	500 mL Plastic	1	Nitric Acid (field filtered)

Well Information

Well Location:	See map	Well Locked at Arrival:	No
Condition of Well:	Good	Well Locked at Departure:	No
Well Completion:	Flush Mount	Key Number To Well:	---

NOTES:

Well Casing Volumes

Gallons/Foot				
	1" = 0.04	1.5" = 0.09	2.5" = 0.26	6" = 1.47
	1.25" = 0.06	2" = 0.16	3" = 0.37	

ARCADIS

Groundwater Sampling Form

Project No. GP09HAFS.F39A.DG0FI | Well ID G4MW045 | Date 1/26/2011

Project Name/Location Hunter Stewart / Ft. Stewart, GA | Weather windy, cold, p.cloudy

Measuring Pt. Description TOC | Screen Setting (ft-bmp) 20-30 | Casing Diameter (in.) 2" | Well Material X PVC / SS / Other

Total Depth (ft-bmp) 33.63 | Static Water Level (ft-bmp) 10.9 | Water Columr 22.73 | Gallons in Well 3.6

Calc. Gallons Purged 10.9 | Pump Intake (ft-bmp) | Purge Method: PDB / Bladder / Disp. Bailer / Peristaltic X | Sample Method Low Flow

Gallons Purged 1.3 | MP Elevation | Pump On/Off 1640/1715

Sample Time: Label 1715 | Replicate/Code No. | Sampled by J. Hanna

Time	Minutes Elapsed	Purge Rate (mL/min)	Gallons Purged	Depth to Water (ft)	Temp. (°C)	Cond. (µS/cm)	Dissolved Oxygen (mg/L)	pH	ORP (mV)	Turbidity (NTU)	Appearance	
											Color	Odor
1645	5	0.05	0.25	11.02	19.32	508	1015.00	6.85	-109.0	17.30	clear	none
1650	10	0.05	0.5	11.11	19.25	510	1.50	6.95	-117.0	14.90	clear	none
1655	15	0.05	0.75	11.13	19.27	515	0.96	6.97	-134.0	9.71	clear	none
1700	20	0.05	1	11.16	19.35	514	0.84	6.98	-137.0	8.16	clear	none
1705	25	0.05	1.25	11.17	19.35	514	0.77	6.98	-137.0	7.98	clear	none

Constituents Sampled	Container	Number	Preservative
VOCs 8260B	40 mL VOAs	3	HCl
SVOCs 8270	1000 mL Amber	2	None
RCRA Metals 6010	500 mL Plastic	1	Nitric Acid
Dissolved Metals	500 mL Plastic	1	Nitric Acid (field filtered)

Well Information

Well Location:	See map	Well Locked at Arrival:	No
Condition of Well:	Good	Well Locked at Departure:	No
Well Completion:	Flush Mount	Key Number To Well:	---

NOTES:

Well Casing Volumes

Gallons/Foot	1" = 0.04	1.5" = 0.09	2.5" = 0.26	6" = 1.47
	1.25" = 0.06	2" = 0.16	3" = 0.37	

ARCADIS

Groundwater Sampling Form

Project No. GP09HAFS.F39A.DG0FI | Well ID G4MW046 | Date 1/27/2011

Project Name/Location Hunter Stewart / Ft. Stewart, GA | Weather Sunny, warm

Measuring Pt. Description TOC | Screen Setting (ft-bmp) 9-19 | Casing Diameter (in.) 2" | Well Material X PVC, ___ SS, ___ Other

Total Depth (ft-bmp) 19.28 | Static Water Level (ft-bmp) 5.6 | Water Column 13.68 | Gallons in Well 2.2

Calc. Gallons Purged 6.6 | Pump Intake (ft-bmp) 15 | Purge Method: PDB ___, Bladder ___, Disp. Bailer ___, Peristaltic X | Sample Method Low Flow

Gallons Purged 1.3 | MP Elevation ___ | Pump On/Off 1530/1610

Sample Time: Label 1610 | Replicate/Code No. ___ | Sampled by J. Hanna

Time	Minutes Elapsed	Purge Rate (mL/min)	Gallons Purged	Depth to Water (ft)	Temp. (°C)	Cond. (µS/cm)	Dissolved Oxygen (mg/L)	pH	ORP (mV)	Turbidity (NTU)	Appearance	
											Color	Odor
1535	5	0.05	0.25	5.71	20.54	211	0.86	5.12	-5.0	11.90	clear	none
1540	10	0.05	0.5	5.70	20.49	212	0.69	5.11	-6.0	8.71	clear	none
1545	15	0.05	0.75	5.71	20.23	212	0.50	5.11	-9.0	6.76	clear	none
1550	20	0.05	1	5.71	20.06	212	0.48	5.11	-10.0	3.92	clear	none
1555	25	0.05	1.25	5.71	20.03	212	0.45	5.11	-9.0	3.18	clear	none

Constituents Sampled	Container	Number	Preservative
VOCs 8260B	40 mL VOAs	3	HCl
SVOCs 8270	1000 mL Amber	2	None
RCRA Metals 6010	500 mL Plastic	1	Nitric Acid
Dissolved Metals	500 mL Plastic	1	Nitric Acid (field filtered)

Well Information

Well Location:	See map	Well Locked at Arrival:	No
Condition of Well:	Good	Well Locked at Departure:	No
Well Completion:	Flush Mount	Key Number To Well:	---

NOTES:

Well Casing Volumes

Gallons/Foot				
	1" = 0.04	1.5" = 0.09	2.5" = 0.26	6" = 1.47
	1.25" = 0.06	2" = 0.16	3" = 0.37	

ARCADIS

Groundwater Sampling Form

Project No. GP09HAFS.F39A.DG0FI | Well ID G4MW047 | Date 1/26/2011

Project Name/Location Hunter Stewart / Ft. Stewart, GA | Weather Sunny, warm

Measuring Pt. Description TOC | Screen Setting (ft-bmp) 25-35 | Casing Diameter (in.) 2" | Well Material X PVC, ___ SS, ___ Other

Total Depth (ft-bmp) 35.5 | Static Water Level (ft-bmp) 5.96 | Water Column 29.54 | Gallons in Well 4.7

Calc. Gallons Purged 14.2 | Pump Intake (ft-bmp) 30 | Purge Method: PDB ___, Bladder ___, Disp. Bailer ___, Peristaltic X | Sample Method Low Flow

Gallons Purged 14.2 | MP Elevation ___ | Pump On/Off 1310/1435

Sample Time: Label 1435 | Replicate/Code No. ___ | Sampled by J. Hanna

Time	Minutes Elapsed	Purge Rate (mL/min)	Gallons Purged	Depth to Water (ft)	Temp. (°C)	Cond. (µS/cm)	Dissolved Oxygen (mg/L)	pH	ORP (mV)	Turbidity (NTU)	Appearance	
											Color	Odor
1330	20	0.20	4.00	14.02	19.59	414	2.08	5.47	-18.0	977.00	brown	yes
1350	40	0.20	8	18.00	22.76	499	0.27	5.51	-57.0	485.00	brown	yes
1410	60	0.20	12.00	20.54	22.71	424	0.40	5.58	-64.0	756.00	brown	yes
1415	65	0.20	13	20.79	22.57	434	0.35	5.60	-66.0	811.00	brown	yes
1421	71	0.20	14.20	20.85	22.73	451	0.29	5.62	-70.0	784.00	brown	yes

Constituents Sampled	Container	Number	Preservative
VOCs 8260B	40 mL VOAs	3	HCl
SVOCs 8270	1000 mL Amber	2	None
RCRA Metals 6010	500 mL Plastic	1	Nitric Acid
BIOGEO	various bottles		various

Well Information

Well Location:	See map	Well Locked at Arrival:	No
Condition of Well:	Good	Well Locked at Departure:	No
Well Completion:	Flush Mount	Key Number To Well:	---

NOTES:

Well Casing Volumes

Gallons/Foot				
	1" = 0.04	1.5" = 0.09	2.5" = 0.26	6" = 1.47
	1.25" = 0.06	2" = 0.16	3" = 0.37	

ARCADIS

Groundwater Sampling Form

Project No. GP08HAFS.F39A | Well ID G4MW055 | Date 8/30/2011

Project Name/Location Hunter Stewart / Ft. Stewart, GA | Weather Cloudy, low 90s

Measuring Pt. Description TOC | Screen Setting (ft-bmp) 88 - 98 | Casing Diameter (in.) 2" | Well Material X PVC, ___ SS, ___ Other

Total Depth (ft-bmp) 98 | Static Water Level (ft-bmp) 14.91 | Water Column 83.09 | Gallons in Well 13.3

Calc. Gallons Purged ___ | Pump Intake (ft-bmp) 93 | Purge Method: Pump | Sample Method Low Flow

Gallons Purged 4.25 | MP Elevation ___ | PDB ___ Bladder ___ Disp. Bailer ___ Peristaltic X | Pump On/Off 1540/1645

Sample Time: Label 1650 | Replicate/Code No. --- | Sampled by C. Tisdale

Time	Minutes Elapsed	Rate (mL/min)	Gallons purged	Depth to Water (ft)	Turbidity (NTU)	pH	Cond. (µmhos/cm)	Temp. (C°)	ORP (mV)	Dissolved Oxygen (mg/L)	Sp. Cond. (µmhos/cm)	Appearance	
												Color	Odor
1600	20	150	2.5	15.08	43.7	10.64	586	28.34	0.1	1.95	552	Clear	None
1605	25	120	2.75	15.09	22.4	10.73	565	27.79	-38.1	1.28	537	Clear	None
1610	30	120	3	15.09	16.5	10.76	559	27.44	-38.9	1.10	534	Clear	None
1615	35	120	3.25	15.09	13.7	10.78	558	27.29	-38.2	1.02	535	Clear	None
1620	40	120	3.5	15.10	11.3	10.80	560	27.00	-62.2	0.91	539	Clear	None
1625	45	120	3.75	15.10	9.4	10.81	562	26.93	-64.7	0.88	541	Clear	None
1630	50	120	<4	15.10	8.9	10.81	565	26.88	-69.2	0.84	547	Clear	None
1635	55	120	4	15.10	8.6	10.82	568	26.85	-72.4	0.82	552	Clear	None
1640	60	120	<4.25	15.10	8.2	10.85	582	26.73	-65.0	0.76	570	Clear	None
1645	65	120	4.25	15.10	7.9	10.85	585	26.70	-67.1	0.73	572	Clear	None

Constituents Sampled	Container	Number	Preservative
VOCs	40 mL VOAs	3	HCl

Well Information

Well Location: See map | Well Locked at Arrival: ___

Condition of Well: Good | Well Locked at Departure: ___

Well Completion: Flush Mount | Key Number To Well: ---

NOTES: Turbidity (qualitative): clear

Well Casing Volumes

Gallons/Foot	1" = 0.04	1.5" = 0.09	2.5" = 0.26	6" = 1.47
	1.25" = 0.06	2" = 0.16	3" = 0.37	

ARCADIS

Groundwater Sampling Form

Project No. GP08HAFS.F39A | Well ID G4MW056 | Date 8/31/2011

Project Name/Location Hunter Stewart / Ft. Stewart, GA | Weather Cloudy, low 90s

Measuring Pt. Description TOC | Screen Setting (ft-bmp) 33.6 - 43.6 | Casing Diameter (in.) 2" | Well Material X PVC, ___ SS, ___ Other

Total Depth (ft-bmp) 43.6 | Static Water Level (ft-bmp) 8.23 | Water Column 35.37 | Gallons in Well 5.7

Calc. Gallons Purged ___ | Pump Intake (ft-bmp) 38.5 | Purge Method: Pump | Sample Method Low Flow

Gallons Purged 2.5 | MP Elevation ___ | PDB ___ | Bladder ___ | Disp. Bailer ___ | Peristaltic X | Pump On/Off 1035

Sample Time: Label 1150 | Replicate/Code No. --- | Sampled by C. Tisdale

Time	Minutes Elapsed	Rate (mL/min)	Gallons purged	Depth to Water (ft)	Turbidity (NTU)	pH	Cond. (µmhos/cm)	Temp. (C°)	ORP (mV)	Dissolved Oxygen (mg/L)	Sp. Cond. (µmhos/cm)	Appearance	
												Color	Odor
1045	10	130	0.25	8.51	183	4.14	71	27.47	113.5	1.95	68	Cloudy	None
1050	15	130	0.5	8.54	177	4.36	67	27.89	76.8	1.19	64	Cloudy	None
1055	20	130	0.75	8.55	164	4.35	67	27.75	59.6	0.78	63	Cloudy	None
1100	25	130	1	8.55	167	4.35	66	27.72	59.2	0.74	63	Cloudy	None
1105	30	130	1.25	8.54	162	4.34	66	27.83	58.7	0.73	63	Cloudy	None
1110	35	130	1.5	8.55	164	4.33	66	27.73	57.2	0.70	63	Cloudy	None
1115	40	130	1.75	8.56	161	4.33	66	27.75	59.3	0.67	63	Cloudy	None
1120	45	130	<2.0	8.56	160	4.34	66	27.67	54.7	0.62	63	Cloudy	None
1125	50	130	2	8.56	162	4.32	66	27.63	55.2	0.64	63	Cloudy	None
1130	55	130	<2.25	8.55	164	4.32	65	27.68	55.0	0.64	62	Cloudy	None
1135	60	130	2.25	8.55	162	4.32	65	27.69	54.7	0.64	62	Cloudy	None
1140	65	130	<2.50	8.55	160	4.32	65	27.65	54.5	0.62	62	Cloudy	None
1145	70	130	2.5	8.55	165	4.32	65	27.66	54.8	0.62	62	Cloudy	None

Constituents Sampled	Container	Number	Preservative
VOCs	40 mL VOAs	3	HCl

Well Information

Well Location:	See map	Well Locked at Arrival:	
Condition of Well:	Good	Well Locked at Departure:	
Well Completion:	Flush Mount	Key Number To Well:	---

NOTES: Turbidity (qualitative): cloudy, light gray

Well Casing Volumes

Gallons/Foot				
	1" = 0.04	1.5" = 0.09	2.5" = 0.26	6" = 1.47
	1.25" = 0.06	2" = 0.16	3" = 0.37	

ARCADIS

Groundwater Sampling Form

Project No. GP08HAFS.F39A | Well ID G4MW057 | Date 8/30/2011

Project Name/Location Hunter Stewart / Ft. Stewart, GA | Weather cloudy, low 90s

Measuring Pt. Description TOC | Screen Setting (ft-bmp) 35-45 | Casing Diameter (in.) 2" | Well Material X PVC, ___ SS, ___ Other

Total Depth (ft-bmp) 45 | Static Water Level (ft-bmp) 10.3 | Water Column 34.7 | Gallons in Well 5.6

Calc. Gallons Purged 17.5 | Pump Intake (ft-bmp) 40 | Purge Method: Pump, PDB ___, Bladder ___, Disp. Bailer ___, Peristaltic X | Sample Method Low Flow

Gallons Purged 2.5 | MP Elevation ___

Sample Time: Label 1855 | Pump On/Off 1755/1850

Replicate/Code No. --- | Sampled by C. Tisdale

Time	Minutes Elapsed	Rate (mL/min)	Gallons purged	Depth to Water (ft)	Turbidity (NTU)	pH	Cond. (µmhos/cm)	Temp. (C°)	ORP (mV)	Dissolved Oxygen (mg/L)	Sp. Cond. (µmhos/cm)	Appearance	
												Color	Odor
1805	10	140	0.25	11.04	>200	5.56	109	24.82	35.7	1.86	109	clear	none
1810	15	110	0.5	11.08	>200	5.48	108	25.26	28.6	1.33	108	clear	none
1815	20	110	0.75	11.12	>200	5.42	108	25.38	15.7	0.83	108	clear	none
1820	25	140	1	11.14	>200	5.36	109	24.58	8.6	0.57	110	clear	none
1825	30	140	1.25	11.16	>200	5.36	109	24.52	7.7	0.54	110	clear	none
1830	35	140	1.5	11.18	>200	5.44	124	24.47	-4.6	0.48	125	clear	none
1835	40	140	1.75	11.19	>200	5.45	129	24.44	-7.6	0.45	128	clear	none
1840	45	140	2	11.2	>200	5.44	130	24.37	-11.3	0.43	132	clear	none
1845	50	140	2.25	11.20	>200	5.44	130	24.39	-11.7	0.42	132	clear	none
1850	55	140	2.5	11.2	>200	5.43	128	24.32	-13.1	0.41	130	clear	none

Constituents Sampled	Container	Number	Preservative
VOCs	40 mL VOAs	3	HCl

Well Information

Well Location:	See map	Well Locked at Arrival:	
Condition of Well:	Good	Well Locked at Departure:	
Well Completion:	Flush Mount	Key Number To Well:	---

NOTES: Turbidity (qualitative):

Well Casing Volumes

Gallons/Foot				
	1" = 0.04	1.5" = 0.09	2.5" = 0.26	6" = 1.47
	1.25" = 0.06	2" = 0.16	3" = 0.37	

ARCADIS

Groundwater Sampling Form

Project No. GP09HAFS.F39A | Well ID G4MW058 | Date 10/25/11

Project Name/Location Hunter Stewart / Ft. Stewart, GA | Weather sunny, 70s

Measuring Pt. Description TOC | Screen Setting (ft-bmp) 36-46 | Casing Diameter (in.) 2" | Well Material X PVC / SS / Other

Total Depth (ft-bmp) 45.91 | Static Water Level (ft-bmp) 7.92 | Water Column 37.99 | Gallons in Well 6.3

Calc. Gallons Purged 19.0 | Pump Intake (ft-bmp) 41 | Purge Method: Pump | Sample Method Low Flow

Gallons Purged 1.75 | MP Elevation | PDB / Bladder / Disp. Bailer / Peristaltic X | Pump On/Off 1340/1425

Sample Time: Label 1425 | Replicate/Code No. --- | Sampled by C. Tisdale

Time	Minutes Elapsed	Rate (mL/min)	Gallons purged	Depth to Water (ft)	Turbidity (NTU)	pH	Cond. (µmhos/cm)	Temp. (C°)	ORP (mV)	Dissolved Oxygen (mg/L)	Sp. Cond. (µmhos/cm)	Appearance	
												Color	Odor
1350	10	130	0.25	8.38	>300	5.08	65	25.89	88.8	1.7		lt. gray	none
1355	15	110	0.5	8.41	>300	5.08	58	26.84	83.4	1.03		lt. gray	none
1400	20	110	0.75	8.42	>300	5.07	58	26.76	84.5	0.92		lt. gray	none
1405	25	110	1	8.43	>300	5.09	58	26.73	79.9	0.83		lt. gray	none
1410	30	110	1.25	8.43	>300	5.10	59	26.80	82.1	0.75		lt. gray	none
1415	35	110	1.5	8.43	278	5.10	58	26.77	74.1	0.76		lt. gray	none
1420	40	110	1.75	8.43	282	5.10	58	26.78	76.3	0.78		lt. gray	none

Constituents Sampled	Container	Number	Preservative
VOCs	40 mL VOAs	3	HCl

Well Information

Well Location: See map | Well Locked at Arrival:

Condition of Well: Good | Well Locked at Departure:

Well Completion: Flush Mount | Key Number To Well: ---

NOTES: Turbidity (qualitative):

Well Casing Volumes

Gallons/Foot	1" = 0.04	1.5" = 0.09	2.5" = 0.26	6" = 1.47
	1.25" = 0.06	2" = 0.16	3" = 0.37	

Appendix D

Laboratory Reports

SHEALY ENVIRONMENTAL SERVICES, INC.

Report of Analysis

ARCADIS U.S., Inc.
30 Patewood Drive
Suite 155
Greenville, SC 29615
Attention: Chase Forman

Project Name: **SWMU39 Hunter Stewart**

Project Number: **GP08HAFS.F39A.DG0F1**

Lot Number: **LC17068**

Date Completed: **03/25/2010**

Nisreen Saikaly
Project Manager

This report shall not be reproduced, except in its entirety, without the written approval of Shealy Environmental Services, Inc.

The following non-paginated documents are considered part of this report: Chain of Custody Record and Sample Receipt Checklist.

* L C 1 7 0 6 8 *

Case Narrative
ARCADIS U.S., Inc.
Lot Number: LC17068

This Report of Analysis contains the analytical result(s) for the sample(s) listed on the Sample Summary following this Case Narrative. The sample receiving date is documented in the header information associated with each sample.

Sample receipt, sample analysis, and data review have been performed in accordance with the most current approved NELAC standards, the Shealy Environmental Services, Inc. ("Shealy") Quality Assurance Management Plan (QAMP), standard operating procedures (SOPs), and Shealy policies. Any exceptions to the NELAC standards, the QAMP, SOPs or policies are qualified on the results page or discussed below.

If you have any questions regarding this report please contact the Shealy Project Manager listed on the cover page.

Volatile Organic Compounds

The RPD exceeded method control limits in batch 29863; however, all other QA/QC criteria for the LCS/LCSD were within acceptance criteria and method control limits. The associated sample results were reported and no corrective action was required.

The LCS recovery for Bromoform was outside method control limits in batch 29887. The LCSD results were within limits. Therefore the associated sample results were reported and no corrective action was required.

The LCSD recovery for Chloroethane was outside method control limits in batch 29942. The LCS results were within limits. Therefore the associated sample results were reported and no corrective action was required.

The LCSD recovery for three analytes was outside method control limits in batch 30086. The LCS results were within limits. Therefore the associated sample results were reported and no corrective action was required.

The LCS recovery for four analytes was slightly outside method control limits in batch 30124. As per method, it is statistically likely that a few analytes will be outside control limits; up to five analytes may marginally exceed the control limits. Therefore the associated sample results were reported and no corrective action was required.

Semivolatile Organic Compounds

A 2X dilution was done on samples -016, -017 and -018 was done due to sample viscosity.

Sample Summary
ARCADIS U.S., Inc.
Lot Number: LC17068

Sample Number	Sample ID	Matrix	Date Sampled	Date Received
001	F39SB009 (0.5-1)	Solid	03/15/2010 1337	03/17/2010
002	F39SB009 (3.0-3.5)	Solid	03/15/2010 1355	03/17/2010
003	F39SB001 (4.5-5.5)	Solid	03/15/2010 1520	03/17/2010
004	F39SB003 (4-5)	Solid	03/15/2010 1610	03/17/2010
005	F39SB004 (4-5)	Solid	03/15/2010 1645	03/17/2010
006	F39SB005 (4-5)	Solid	03/15/2010 1700	03/17/2010
007	F39SB006 (4-5)	Solid	03/15/2010 1725	03/17/2010
008	F39SB007 (4-5)	Solid	03/15/2010 1800	03/17/2010
009	F39SB010 (0.5-1.0)	Solid	03/16/2010 0840	03/17/2010
010	F39SB010 (3.0-3.5)	Solid	03/16/2010 0850	03/17/2010
011	F39SB011 (0.5-1.0)	Solid	03/16/2010 0918	03/17/2010
012	F39SB011 (3.0-3.5)	Solid	03/16/2010 0935	03/17/2010
013	F39SB012 (0.5-1.0)	Solid	03/16/2010 1000	03/17/2010
014	F39SB012 (3.0-3.5)	Solid	03/16/2010 1015	03/17/2010
015	TRIP BLANK (031610)	Aqueous	03/17/2010 0900	03/17/2010
016	DUP-2	Solid	03/18/2010 0700	03/19/2010
017	F39SB008 (4-5)	Solid	03/18/2010 0820	03/19/2010
018	F39SB002 (4-5)	Solid	03/18/2010 0844	03/19/2010
019	Trip Blank (031810)	Aqueous	03/19/2010 0830	03/19/2010

(19 samples)

Executive Summary
ARCADIS U.S., Inc.
Lot Number: LC17068

Sample	Sample ID	Matrix	Parameter	Method	Result	Q	Units	Page
001	F39SB009 (0.5-1)	Solid	Arsenic	6010C	0.56	J	mg/kg	12
001	F39SB009 (0.5-1)	Solid	Barium	6010C	10		mg/kg	12
001	F39SB009 (0.5-1)	Solid	Cadmium	6010C	0.36	B	mg/kg	12
001	F39SB009 (0.5-1)	Solid	Chromium	6010C	5.9	B	mg/kg	12
001	F39SB009 (0.5-1)	Solid	Lead	6010C	43		mg/kg	12
001	F39SB009 (0.5-1)	Solid	Mercury	7471B	0.029	J	mg/kg	12
001	F39SB009 (0.5-1)	Solid	Selenium	6010C	0.61	B	mg/kg	12
002	F39SB009 (3.0-3.5)	Solid	Arsenic	6010C	0.70		mg/kg	17
002	F39SB009 (3.0-3.5)	Solid	Barium	6010C	8.1		mg/kg	17
002	F39SB009 (3.0-3.5)	Solid	Cadmium	6010C	0.045	BJ	mg/kg	17
002	F39SB009 (3.0-3.5)	Solid	Chromium	6010C	3.4	B	mg/kg	17
002	F39SB009 (3.0-3.5)	Solid	Lead	6010C	5.4		mg/kg	17
002	F39SB009 (3.0-3.5)	Solid	Mercury	7471B	0.028	J	mg/kg	17
002	F39SB009 (3.0-3.5)	Solid	Selenium	6010C	0.51	BJ	mg/kg	17
003	F39SB001 (4.5-5.5)	Solid	Arsenic	6010C	0.56		mg/kg	22
003	F39SB001 (4.5-5.5)	Solid	Barium	6010C	7.0		mg/kg	22
003	F39SB001 (4.5-5.5)	Solid	Cadmium	6010C	0.049	BJ	mg/kg	22
003	F39SB001 (4.5-5.5)	Solid	Chromium	6010C	2.6	B	mg/kg	22
003	F39SB001 (4.5-5.5)	Solid	Lead	6010C	3.6		mg/kg	22
003	F39SB001 (4.5-5.5)	Solid	Mercury	7471B	0.014	J	mg/kg	22
003	F39SB001 (4.5-5.5)	Solid	Selenium	6010C	0.67	B	mg/kg	22
004	F39SB003 (4-5)	Solid	Acetone	8260B	63		ug/kg	23
004	F39SB003 (4-5)	Solid	Arsenic	6010C	0.31	J	mg/kg	27
004	F39SB003 (4-5)	Solid	Barium	6010C	18		mg/kg	27
004	F39SB003 (4-5)	Solid	Cadmium	6010C	0.027	BJ	mg/kg	27
004	F39SB003 (4-5)	Solid	Chromium	6010C	3.4	B	mg/kg	27
004	F39SB003 (4-5)	Solid	Lead	6010C	3.5		mg/kg	27
004	F39SB003 (4-5)	Solid	Mercury	7471B	0.023	J	mg/kg	27
004	F39SB003 (4-5)	Solid	Selenium	6010C	0.79	B	mg/kg	27
005	F39SB004 (4-5)	Solid	Acetone	8260B	12	J	ug/kg	28
005	F39SB004 (4-5)	Solid	Barium	6010C	2.2		mg/kg	32
005	F39SB004 (4-5)	Solid	Cadmium	6010C	0.029	BJ	mg/kg	32
005	F39SB004 (4-5)	Solid	Chromium	6010C	2.2	B	mg/kg	32
005	F39SB004 (4-5)	Solid	Lead	6010C	1.5		mg/kg	32
005	F39SB004 (4-5)	Solid	Mercury	7471B	0.0099	J	mg/kg	32
005	F39SB004 (4-5)	Solid	Selenium	6010C	0.44	BJ	mg/kg	32
006	F39SB005 (4-5)	Solid	Acetone	8260B	24		ug/kg	33
006	F39SB005 (4-5)	Solid	Isopropylbenzene	8260B	0.81	J	ug/kg	33
006	F39SB005 (4-5)	Solid	Barium	6010C	2.3		mg/kg	37
006	F39SB005 (4-5)	Solid	Cadmium	6010C	0.022	BJ	mg/kg	37
006	F39SB005 (4-5)	Solid	Chromium	6010C	1.3	B	mg/kg	37
006	F39SB005 (4-5)	Solid	Lead	6010C	1.8		mg/kg	37
006	F39SB005 (4-5)	Solid	Selenium	6010C	0.22	BJ	mg/kg	37
007	F39SB006 (4-5)	Solid	Acetone	8260B	63		ug/kg	38
007	F39SB006 (4-5)	Solid	Benzaldehyde	8270D	130		ug/kg	40

Executive Summary (Continued)

Lot Number: LC17068

Sample	Sample ID	Matrix	Parameter	Method	Result	Q	Units	Page
007	F39SB006 (4-5)	Solid	Arsenic	6010C	0.57		mg/kg	42
007	F39SB006 (4-5)	Solid	Barium	6010C	6.5		mg/kg	42
007	F39SB006 (4-5)	Solid	Cadmium	6010C	0.061	BJ	mg/kg	42
007	F39SB006 (4-5)	Solid	Chromium	6010C	2.6	B	mg/kg	42
007	F39SB006 (4-5)	Solid	Lead	6010C	3.1		mg/kg	42
007	F39SB006 (4-5)	Solid	Mercury	7471B	0.015	J	mg/kg	42
007	F39SB006 (4-5)	Solid	Selenium	6010C	0.55	B	mg/kg	42
008	F39SB007 (4-5)	Solid	Acetone	8260B	62		ug/kg	43
008	F39SB007 (4-5)	Solid	Methylcyclohexane	8260B	1.0	J	ug/kg	43
008	F39SB007 (4-5)	Solid	Acenaphthylene	8270D	52	J	ug/kg	45
008	F39SB007 (4-5)	Solid	Anthracene	8270D	35	J	ug/kg	45
008	F39SB007 (4-5)	Solid	Benzo(a)anthracene	8270D	59	J	ug/kg	45
008	F39SB007 (4-5)	Solid	Benzo(a)pyrene	8270D	74		ug/kg	45
008	F39SB007 (4-5)	Solid	Benzo(b)fluoranthene	8270D	97		ug/kg	45
008	F39SB007 (4-5)	Solid	Benzo(g,h,i)perylene	8270D	62	J	ug/kg	45
008	F39SB007 (4-5)	Solid	Benzo(k)fluoranthene	8270D	32	J	ug/kg	45
008	F39SB007 (4-5)	Solid	Chrysene	8270D	89		ug/kg	45
008	F39SB007 (4-5)	Solid	Fluoranthene	8270D	89		ug/kg	45
008	F39SB007 (4-5)	Solid	Indeno(1,2,3-c,d)pyrene	8270D	42	J	ug/kg	46
008	F39SB007 (4-5)	Solid	2-Methylnaphthalene	8270D	55	J	ug/kg	46
008	F39SB007 (4-5)	Solid	Phenanthrene	8270D	67	J	ug/kg	46
008	F39SB007 (4-5)	Solid	Pyrene	8270D	120		ug/kg	46
008	F39SB007 (4-5)	Solid	Arsenic	6010C	0.49	J	mg/kg	47
008	F39SB007 (4-5)	Solid	Barium	6010C	12		mg/kg	47
008	F39SB007 (4-5)	Solid	Cadmium	6010C	0.10	B	mg/kg	47
008	F39SB007 (4-5)	Solid	Chromium	6010C	3.4	B	mg/kg	47
008	F39SB007 (4-5)	Solid	Lead	6010C	10		mg/kg	47
008	F39SB007 (4-5)	Solid	Mercury	7471B	0.026	J	mg/kg	47
008	F39SB007 (4-5)	Solid	Selenium	6010C	0.49	BJ	mg/kg	47
009	F39SB010 (0.5-1.0)	Solid	Acetone	8260B	17	J	ug/kg	48
009	F39SB010 (0.5-1.0)	Solid	Acenaphthylene	8270D	400		ug/kg	50
009	F39SB010 (0.5-1.0)	Solid	Anthracene	8270D	250		ug/kg	50
009	F39SB010 (0.5-1.0)	Solid	Benzo(a)anthracene	8270D	500		ug/kg	50
009	F39SB010 (0.5-1.0)	Solid	Benzo(a)pyrene	8270D	820		ug/kg	50
009	F39SB010 (0.5-1.0)	Solid	Benzo(b)fluoranthene	8270D	1100		ug/kg	50
009	F39SB010 (0.5-1.0)	Solid	Benzo(g,h,i)perylene	8270D	480		ug/kg	50
009	F39SB010 (0.5-1.0)	Solid	Benzo(k)fluoranthene	8270D	380		ug/kg	50
009	F39SB010 (0.5-1.0)	Solid	Chrysene	8270D	570		ug/kg	50
009	F39SB010 (0.5-1.0)	Solid	Di-n-octylphthalate	8270D	39	J	ug/kg	50
009	F39SB010 (0.5-1.0)	Solid	Fluoranthene	8270D	280		ug/kg	50
009	F39SB010 (0.5-1.0)	Solid	Indeno(1,2,3-c,d)pyrene	8270D	420		ug/kg	51
009	F39SB010 (0.5-1.0)	Solid	Phenanthrene	8270D	23	J	ug/kg	51
009	F39SB010 (0.5-1.0)	Solid	Pyrene	8270D	640		ug/kg	51
009	F39SB010 (0.5-1.0)	Solid	Barium	6010C	5.0		mg/kg	52
009	F39SB010 (0.5-1.0)	Solid	Cadmium	6010C	0.054	BJ	mg/kg	52
009	F39SB010 (0.5-1.0)	Solid	Chromium	6010C	3.4	B	mg/kg	52
009	F39SB010 (0.5-1.0)	Solid	Lead	6010C	3.4		mg/kg	52
009	F39SB010 (0.5-1.0)	Solid	Mercury	7471B	0.030	J	mg/kg	52

Executive Summary (Continued)

Lot Number: LC17068

Sample	Sample ID	Matrix	Parameter	Method	Result	Q	Units	Page
009	F39SB010 (0.5-1.0)	Solid	Selenium	6010C	0.38	BJ	mg/kg	52
010	F39SB010 (3.0-3.5)	Solid	Acetone	8260B	16	J	ug/kg	53
010	F39SB010 (3.0-3.5)	Solid	Acenaphthylene	8270D	29	J	ug/kg	55
010	F39SB010 (3.0-3.5)	Solid	Benzo(a)anthracene	8270D	38	J	ug/kg	55
010	F39SB010 (3.0-3.5)	Solid	Benzo(b)fluoranthene	8270D	73		ug/kg	55
010	F39SB010 (3.0-3.5)	Solid	Benzo(k)fluoranthene	8270D	21	J	ug/kg	55
010	F39SB010 (3.0-3.5)	Solid	Chrysene	8270D	44	J	ug/kg	55
010	F39SB010 (3.0-3.5)	Solid	Fluoranthene	8270D	21	J	ug/kg	55
010	F39SB010 (3.0-3.5)	Solid	Pyrene	8270D	46	J	ug/kg	56
010	F39SB010 (3.0-3.5)	Solid	Barium	6010C	3.1		mg/kg	57
010	F39SB010 (3.0-3.5)	Solid	Cadmium	6010C	0.041	BJ	mg/kg	57
010	F39SB010 (3.0-3.5)	Solid	Chromium	6010C	1.6	B	mg/kg	57
010	F39SB010 (3.0-3.5)	Solid	Lead	6010C	2.5		mg/kg	57
010	F39SB010 (3.0-3.5)	Solid	Mercury	7471B	0.015	J	mg/kg	57
010	F39SB010 (3.0-3.5)	Solid	Selenium	6010C	0.30	BJ	mg/kg	57
011	F39SB011 (0.5-1.0)	Solid	Acetone	8260B	24		ug/kg	58
011	F39SB011 (0.5-1.0)	Solid	Barium	6010C	6.3		mg/kg	62
011	F39SB011 (0.5-1.0)	Solid	Cadmium	6010C	0.038	BJ	mg/kg	62
011	F39SB011 (0.5-1.0)	Solid	Chromium	6010C	2.7	B	mg/kg	62
011	F39SB011 (0.5-1.0)	Solid	Lead	6010C	3.6		mg/kg	62
011	F39SB011 (0.5-1.0)	Solid	Mercury	7471B	0.015	J	mg/kg	62
011	F39SB011 (0.5-1.0)	Solid	Selenium	6010C	0.52	B	mg/kg	62
012	F39SB011 (3.0-3.5)	Solid	Acetone	8260B	63		ug/kg	63
012	F39SB011 (3.0-3.5)	Solid	Benzaldehyde	8270D	97		ug/kg	65
012	F39SB011 (3.0-3.5)	Solid	Arsenic	6010C	0.48	J	mg/kg	67
012	F39SB011 (3.0-3.5)	Solid	Barium	6010C	3.0		mg/kg	67
012	F39SB011 (3.0-3.5)	Solid	Cadmium	6010C	0.030	BJ	mg/kg	67
012	F39SB011 (3.0-3.5)	Solid	Chromium	6010C	1.0	B	mg/kg	67
012	F39SB011 (3.0-3.5)	Solid	Lead	6010C	2.1		mg/kg	67
012	F39SB011 (3.0-3.5)	Solid	Selenium	6010C	0.38	BJ	mg/kg	67
013	F39SB012 (0.5-1.0)	Solid	Acetone	8260B	15	J	ug/kg	68
013	F39SB012 (0.5-1.0)	Solid	Barium	6010C	1.1	J	mg/kg	72
013	F39SB012 (0.5-1.0)	Solid	Cadmium	6010C	0.014	BJ	mg/kg	72
013	F39SB012 (0.5-1.0)	Solid	Chromium	6010C	0.38	B	mg/kg	72
013	F39SB012 (0.5-1.0)	Solid	Lead	6010C	0.81		mg/kg	72
014	F39SB012 (3.0-3.5)	Solid	Acetone	8260B	13	J	ug/kg	73
014	F39SB012 (3.0-3.5)	Solid	Barium	6010C	19		mg/kg	77
014	F39SB012 (3.0-3.5)	Solid	Cadmium	6010C	0.038	BJ	mg/kg	77
014	F39SB012 (3.0-3.5)	Solid	Chromium	6010C	7.8	B	mg/kg	77
014	F39SB012 (3.0-3.5)	Solid	Lead	6010C	7.5		mg/kg	77
014	F39SB012 (3.0-3.5)	Solid	Mercury	7471B	0.096		mg/kg	77
014	F39SB012 (3.0-3.5)	Solid	Selenium	6010C	0.65	B	mg/kg	77
016	DUP-2	Solid	Acetone	8260B	19		ug/kg	80
016	DUP-2	Solid	Barium	6010C	6.7		mg/kg	84
016	DUP-2	Solid	Cadmium	6010C	0.052	BJ	mg/kg	84
016	DUP-2	Solid	Chromium	6010C	2.8	B	mg/kg	84
016	DUP-2	Solid	Lead	6010C	3.9		mg/kg	84
016	DUP-2	Solid	Mercury	7471B	0.020	J	mg/kg	84

Executive Summary (Continued)

Lot Number: LC17068

Sample	Sample ID	Matrix	Parameter	Method	Result	Q	Units	Page
016	DUP-2	Solid	Selenium	6010C	0.53	BJ	mg/kg	84
017	F39SB008 (4-5)	Solid	Acetone	8260B	31		ug/kg	85
017	F39SB008 (4-5)	Solid	Arsenic	6010C	0.30	J	mg/kg	89
017	F39SB008 (4-5)	Solid	Barium	6010C	6.2		mg/kg	89
017	F39SB008 (4-5)	Solid	Cadmium	6010C	0.037	BJ	mg/kg	89
017	F39SB008 (4-5)	Solid	Chromium	6010C	2.7	B	mg/kg	89
017	F39SB008 (4-5)	Solid	Lead	6010C	3.7		mg/kg	89
017	F39SB008 (4-5)	Solid	Mercury	7471B	0.028	J	mg/kg	89
017	F39SB008 (4-5)	Solid	Selenium	6010C	0.47	BJ	mg/kg	89
018	F39SB002 (4-5)	Solid	Acetone	8260B	15	J	ug/kg	90
018	F39SB002 (4-5)	Solid	Barium	6010C	6.4		mg/kg	94
018	F39SB002 (4-5)	Solid	Cadmium	6010C	0.057	BJ	mg/kg	94
018	F39SB002 (4-5)	Solid	Chromium	6010C	3.2	B	mg/kg	94
018	F39SB002 (4-5)	Solid	Lead	6010C	3.6		mg/kg	94
018	F39SB002 (4-5)	Solid	Mercury	7471B	0.029	J	mg/kg	94
018	F39SB002 (4-5)	Solid	Selenium	6010C	0.39	BJ	mg/kg	94
019	Trip Blank (031810)	Aqueous	Acetone	8260B	4.7	J	ug/L	95
019	Trip Blank (031810)	Aqueous	Carbon disulfide	8260B	0.16	BJ	ug/L	95

(159 detections)

Volatile Organic Compounds by GC/MS

Client: **ARCADIS U.S., Inc.**
Laboratory ID: **LC17068-001**
Description: **F39SB009 (0.5-1)**
Matrix: **Solid**
Date Sampled: **03/15/2010 1337**
% Solids: **86.3** **03/17/2010 2329**
Date Received: **03/17/2010**

Run	Prep Method	Analytical Method	Dilution	Analysis Date	Analyst	Prep Date	Batch	Sample Wt.(g)
1	5035	8260B	1	03/20/2010 1747	DLB		29863	5.52

Parameter	CAS Number	Analytical Method	Result	Q	PQL	MDL	Units	Run
Acetone	67-64-1	8260B	ND		21	7.0	ug/kg	1
Benzene	71-43-2	8260B	ND		5.3	1.2	ug/kg	1
Bromodichloromethane	75-27-4	8260B	ND		5.3	1.8	ug/kg	1
Bromoform	75-25-2	8260B	ND		5.3	0.74	ug/kg	1
Bromomethane (Methyl bromide)	74-83-9	8260B	ND		5.3	1.9	ug/kg	1
2-Butanone (MEK)	78-93-3	8260B	ND		11	2.5	ug/kg	1
Carbon disulfide	75-15-0	8260B	ND		5.3	1.4	ug/kg	1
Carbon tetrachloride	56-23-5	8260B	ND		5.3	1.9	ug/kg	1
Chlorobenzene	108-90-7	8260B	ND		5.3	1.8	ug/kg	1
Chloroethane	75-00-3	8260B	ND		5.3	1.4	ug/kg	1
Chloroform	67-66-3	8260B	ND		5.3	0.87	ug/kg	1
Chloromethane (Methyl chloride)	74-87-3	8260B	ND		5.3	1.1	ug/kg	1
Cyclohexane	110-82-7	8260B	ND		5.3	0.71	ug/kg	1
1,2-Dibromo-3-chloropropane (DBCP)	96-12-8	8260B	ND		5.3	1.6	ug/kg	1
Dibromochloromethane	124-48-1	8260B	ND		5.3	1.8	ug/kg	1
1,2-Dibromoethane (EDB)	106-93-4	8260B	ND		5.3	0.89	ug/kg	1
1,2-Dichlorobenzene	95-50-1	8260B	ND		5.3	1.8	ug/kg	1
1,3-Dichlorobenzene	541-73-1	8260B	ND		5.3	1.8	ug/kg	1
1,4-Dichlorobenzene	106-46-7	8260B	ND		5.3	1.8	ug/kg	1
Dichlorodifluoromethane	75-71-8	8260B	ND		5.3	1.7	ug/kg	1
1,1-Dichloroethane	75-34-3	8260B	ND		5.3	0.77	ug/kg	1
1,2-Dichloroethane	107-06-2	8260B	ND		5.3	1.1	ug/kg	1
1,1-Dichloroethene	75-35-4	8260B	ND		5.3	1.8	ug/kg	1
cis-1,2-Dichloroethene	156-59-2	8260B	ND		5.3	0.80	ug/kg	1
trans-1,2-Dichloroethene	156-60-5	8260B	ND		5.3	1.6	ug/kg	1
1,2-Dichloropropane	78-87-5	8260B	ND		5.3	0.96	ug/kg	1
cis-1,3-Dichloropropene	10061-01-5	8260B	ND		5.3	0.71	ug/kg	1
trans-1,3-Dichloropropene	10061-02-6	8260B	ND		5.3	0.86	ug/kg	1
Ethylbenzene	100-41-4	8260B	ND		5.3	1.8	ug/kg	1
2-Hexanone	591-78-6	8260B	ND		11	1.4	ug/kg	1
Isopropylbenzene	98-82-8	8260B	ND		5.3	0.84	ug/kg	1
Methyl acetate	79-20-9	8260B	ND		5.3	0.70	ug/kg	1
Methyl tertiary butyl ether (MTBE)	1634-04-4	8260B	ND		5.3	0.42	ug/kg	1
4-Methyl-2-pentanone	108-10-1	8260B	ND		11	1.6	ug/kg	1
Methylcyclohexane	108-87-2	8260B	ND		5.3	0.64	ug/kg	1
Methylene chloride	75-09-2	8260B	ND		5.3	2.7	ug/kg	1
Styrene	100-42-5	8260B	ND		5.3	1.2	ug/kg	1
1,1,2,2-Tetrachloroethane	79-34-5	8260B	ND		5.3	0.49	ug/kg	1
Tetrachloroethene	127-18-4	8260B	ND		5.3	2.4	ug/kg	1
Toluene	108-88-3	8260B	ND		5.3	1.8	ug/kg	1
1,1,2-Trichloro-1,2,2-Trifluoroethane	76-13-1	8260B	ND		5.3	2.2	ug/kg	1
1,2,4-Trichlorobenzene	120-82-1	8260B	ND		5.3	1.8	ug/kg	1
1,1,1-Trichloroethane	71-55-6	8260B	ND		5.3	0.89	ug/kg	1
1,1,2-Trichloroethane	79-00-5	8260B	ND		5.3	0.83	ug/kg	1

PQL = Practical quantitation limit
B = Detected in the method blank
E = Quantitation of compound exceeded the calibration range
ND = Not detected at or above the MDL
J = Estimated result < PQL and ≥ MDL
P = The RPD between two GC columns exceeds 40%
Where applicable, all soil sample analysis are reported on a dry weight basis unless flagged with a "W"
N = Recovery is out of criteria
H = Out of holding time

Volatile Organic Compounds by GC/MS

Client: **ARCADIS U.S., Inc.**
Laboratory ID: **LC17068-001**
Description: **F39SB009 (0.5-1)**
Matrix: **Solid**
Date Sampled: **03/15/2010 1337**
% Solids: **86.3** **03/17/2010 2329**
Date Received: **03/17/2010**

Run	Prep Method	Analytical Method	Dilution	Analysis Date	Analyst	Prep Date	Batch	Sample Wt.(g)
1	5035	8260B	1	03/20/2010 1747	DLB		29863	5.52

Parameter	CAS Number	Analytical Method	Result	Q	PQL	MDL	Units	Run
Trichloroethene	79-01-6	8260B	ND		5.3	2.0	ug/kg	1
Trichlorofluoromethane	75-69-4	8260B	ND		5.3	1.6	ug/kg	1
Vinyl chloride	75-01-4	8260B	ND		5.3	0.90	ug/kg	1
Xylenes (total)	1330-20-7	8260B	ND		5.3	3.0	ug/kg	1

Surrogate	Q	Run 1 % Recovery	Acceptance Limits
1,2-Dichloroethane-d4		96	53-142
Bromofluorobenzene		90	47-138
Toluene-d8		101	68-124

PQL = Practical quantitation limit
B = Detected in the method blank
E = Quantitation of compound exceeded the calibration range
ND = Not detected at or above the MDL
J = Estimated result < PQL and ≥ MDL
P = The RPD between two GC columns exceeds 40%
Where applicable, all soil sample analysis are reported on a dry weight basis unless flagged with a "W"
N = Recovery is out of criteria
H = Out of holding time

Semivolatile Organic Compounds by GC/MS

Client: **ARCADIS U.S., Inc.**
Laboratory ID: **LC17068-001**
Description: **F39SB009 (0.5-1)**
Matrix: **Solid**
Date Sampled: **03/15/2010 1337**
% Solids: **86.3** **03/17/2010 2329**
Date Received: **03/17/2010**

Run	Prep Method	Analytical Method	Dilution	Analysis Date	Analyst	Prep Date	Batch
1	3550C	8270D	1	03/22/2010 1353	JGH	03/19/2010 1000	29722

Parameter	CAS Number	Analytical Method	Result	Q	PQL	MDL	Units	Run
Acenaphthene	83-32-9	8270D	ND		78	12	ug/kg	1
Acenaphthylene	208-96-8	8270D	ND		78	12	ug/kg	1
Acetophenone	98-86-2	8270D	ND		78	21	ug/kg	1
Anthracene	120-12-7	8270D	ND		78	8.6	ug/kg	1
Atrazine	1912-24-9	8270D	ND		78	20	ug/kg	1
Benzaldehyde	100-52-7	8270D	ND		78	20	ug/kg	1
Benzo(a)anthracene	56-55-3	8270D	ND		78	10	ug/kg	1
Benzo(a)pyrene	50-32-8	8270D	ND		78	11	ug/kg	1
Benzo(b)fluoranthene	205-99-2	8270D	ND		78	11	ug/kg	1
Benzo(g,h,i)perylene	191-24-2	8270D	ND		78	13	ug/kg	1
Benzo(k)fluoranthene	207-08-9	8270D	ND		78	11	ug/kg	1
1,1'-Biphenyl	92-52-4	8270D	ND		78	12	ug/kg	1
4-Bromophenyl phenyl ether	101-55-3	8270D	ND		78	11	ug/kg	1
Butyl benzyl phthalate	85-68-7	8270D	ND		150	51	ug/kg	1
Caprolactam	105-60-2	8270D	ND		78	20	ug/kg	1
Carbazole	86-74-8	8270D	ND		78	17	ug/kg	1
4-Chloro-3-methyl phenol	59-50-7	8270D	ND		78	9.8	ug/kg	1
4-Chloroaniline	106-47-8	8270D	ND		78	7.8	ug/kg	1
bis(2-Chloroethoxy)methane	111-91-1	8270D	ND		78	12	ug/kg	1
bis(2-Chloroethyl)ether	111-44-4	8270D	ND		78	11	ug/kg	1
bis(2-Chloroisopropyl)ether	108-60-1	8270D	ND		78	13	ug/kg	1
2-Chloronaphthalene	91-58-7	8270D	ND		78	13	ug/kg	1
2-Chlorophenol	95-57-8	8270D	ND		78	11	ug/kg	1
4-Chlorophenyl phenyl ether	7005-72-3	8270D	ND		78	13	ug/kg	1
Chrysene	218-01-9	8270D	ND		78	13	ug/kg	1
Dibenzo(a,h)anthracene	53-70-3	8270D	ND		78	11	ug/kg	1
Dibenzofuran	132-64-9	8270D	ND		78	12	ug/kg	1
3,3'-Dichlorobenzidine	91-94-1	8270D	ND		380	42	ug/kg	1
2,4-Dichlorophenol	120-83-2	8270D	ND		78	12	ug/kg	1
Diethylphthalate	84-66-2	8270D	ND		78	26	ug/kg	1
Dimethyl phthalate	131-11-3	8270D	ND		78	26	ug/kg	1
2,4-Dimethylphenol	105-67-9	8270D	ND		78	14	ug/kg	1
Di-n-butyl phthalate	84-74-2	8270D	ND		78	26	ug/kg	1
4,6-Dinitro-2-methylphenol	534-52-1	8270D	ND		380	150	ug/kg	1
2,4-Dinitrophenol	51-28-5	8270D	ND		380	130	ug/kg	1
2,4-Dinitrotoluene	121-14-2	8270D	ND		150	21	ug/kg	1
2,6-Dinitrotoluene	606-20-2	8270D	ND		150	20	ug/kg	1
Di-n-octylphthalate	117-84-0	8270D	ND		78	37	ug/kg	1
bis(2-Ethylhexyl)phthalate	117-81-7	8270D	ND		78	26	ug/kg	1
Fluoranthene	206-44-0	8270D	ND		78	12	ug/kg	1
Fluorene	86-73-7	8270D	ND		78	10	ug/kg	1
Hexachlorobenzene	118-74-1	8270D	ND		78	17	ug/kg	1
Hexachlorobutadiene	87-68-3	8270D	ND		78	13	ug/kg	1
Hexachlorocyclopentadiene	77-47-4	8270D	ND		380	28	ug/kg	1

PQL = Practical quantitation limit
B = Detected in the method blank
E = Quantitation of compound exceeded the calibration range
ND = Not detected at or above the MDL
J = Estimated result < PQL and ≥ MDL
P = The RPD between two GC columns exceeds 40%
Where applicable, all soil sample analysis are reported on a dry weight basis unless flagged with a "W"
N = Recovery is out of criteria
H = Out of holding time

Semivolatile Organic Compounds by GC/MS

Client: **ARCADIS U.S., Inc.**
Laboratory ID: **LC17068-001**
Description: **F39SB009 (0.5-1)**
Matrix: **Solid**
Date Sampled: **03/15/2010 1337**
% Solids: **86.3** **03/17/2010 2329**
Date Received: **03/17/2010**

Run	Prep Method	Analytical Method	Dilution	Analysis Date	Analyst	Prep Date	Batch
1	3550C	8270D	1	03/22/2010 1353	JGH	03/19/2010 1000	29722

Parameter	CAS Number	Analytical Method	Result	Q	PQL	MDL	Units	Run
Hexachloroethane	67-72-1	8270D	ND		78	10	ug/kg	1
Indeno(1,2,3-c,d)pyrene	193-39-5	8270D	ND		78	11	ug/kg	1
Isophorone	78-59-1	8270D	ND		78	8.5	ug/kg	1
2-Methylnaphthalene	91-57-6	8270D	ND		78	12	ug/kg	1
2-Methylphenol	95-48-7	8270D	ND		78	7.0	ug/kg	1
3 & 4-Methylphenol	106-44-5	8270D	ND		150	14	ug/kg	1
Naphthalene	91-20-3	8270D	ND		78	12	ug/kg	1
2-Nitroaniline	88-74-4	8270D	ND		150	26	ug/kg	1
3-Nitroaniline	99-09-2	8270D	ND		150	45	ug/kg	1
4-Nitroaniline	100-01-6	8270D	ND		150	22	ug/kg	1
Nitrobenzene	98-95-3	8270D	ND		78	6.2	ug/kg	1
2-Nitrophenol	88-75-5	8270D	ND		150	21	ug/kg	1
4-Nitrophenol	100-02-7	8270D	ND		380	110	ug/kg	1
N-Nitrosodi-n-propylamine	621-64-7	8270D	ND		78	15	ug/kg	1
N-Nitrosodiphenylamine (Diphenylamine)	86-30-6	8270D	ND		78	9.6	ug/kg	1
Pentachlorophenol	87-86-5	8270D	ND		380	160	ug/kg	1
Phenanthrene	85-01-8	8270D	ND		78	10	ug/kg	1
Phenol	108-95-2	8270D	ND		78	10	ug/kg	1
Pyrene	129-00-0	8270D	ND		78	15	ug/kg	1
2,4,5-Trichlorophenol	95-95-4	8270D	ND		78	11	ug/kg	1
2,4,6-Trichlorophenol	88-06-2	8270D	ND		78	11	ug/kg	1

Surrogate	Q	Run 1 % Recovery	Acceptance Limits
2-Fluorobiphenyl		55	33-102
2-Fluorophenol		49	28-104
Nitrobenzene-d5		48	22-109
Phenol-d5		55	27-103
Terphenyl-d14		67	41-120
2,4,6-Tribromophenol		76	30-117

PQL = Practical quantitation limit
B = Detected in the method blank
E = Quantitation of compound exceeded the calibration range
ND = Not detected at or above the MDL
J = Estimated result < PQL and ≥ MDL
P = The RPD between two GC columns exceeds 40%
Where applicable, all soil sample analysis are reported on a dry weight basis unless flagged with a "W"
N = Recovery is out of criteria
H = Out of holding time

RCRA Metals

Client: **ARCADIS U.S., Inc.**
Laboratory ID: **LC17068-001**
Description: **F39SB009 (0.5-1)**
Matrix: **Solid**
Date Sampled: **03/15/2010 1337**
% Solids: **86.3** **03/17/2010 2329**
Date Received: **03/17/2010**

Run	Prep Method	Analytical Method	Dilution	Analysis Date	Analyst	Prep Date	Batch
1		7471B	1	03/22/2010 2335	BNW	03/22/2010 2050	29905
1	3050B	6010C	1	03/23/2010 2240	CDF	03/22/2010 1730	29899

Parameter	CAS Number	Analytical Method	Result	Q	PQL	MDL	Units	Run
Arsenic	**7440-38-2**	**6010C**	**0.56**	**J**	**0.57**	**0.22**	**mg/kg**	**1**
Barium	**7440-39-3**	**6010C**	**10**		**1.5**	**0.10**	**mg/kg**	**1**
Cadmium	**7440-43-9**	**6010C**	**0.36**	**B**	**0.11**	**0.012**	**mg/kg**	**1**
Chromium	**7440-47-3**	**6010C**	**5.9**	**B**	**0.29**	**0.058**	**mg/kg**	**1**
Lead	**7439-92-1**	**6010C**	**43**		**0.57**	**0.11**	**mg/kg**	**1**
Mercury	**7439-97-6**	**7471B**	**0.029**	**J**	**0.094**	**0.0067**	**mg/kg**	**1**
Selenium	**7782-49-2**	**6010C**	**0.61**	**B**	**0.57**	**0.20**	**mg/kg**	**1**
Silver	7440-22-4	6010C	ND		0.29	0.048	mg/kg	1

PQL = Practical quantitation limit
B = Detected in the method blank
E = Quantitation of compound exceeded the calibration range
ND = Not detected at or above the MDL
J = Estimated result < PQL and ≥ MDL
P = The RPD between two GC columns exceeds 40%
Where applicable, all soil sample analysis are reported on a dry weight basis unless flagged with a "W"
N = Recovery is out of criteria
H = Out of holding time

Volatile Organic Compounds by GC/MS

Client: **ARCADIS U.S., Inc.**
Laboratory ID: **LC17068-002**
Description: **F39SB009 (3.0-3.5)**
Matrix: **Solid**
Date Sampled: **03/15/2010 1355**
% Solids: **87.3** **03/17/2010 2329**
Date Received: **03/17/2010**

Run	Prep Method	Analytical Method	Dilution	Analysis Date	Analyst	Prep Date	Batch	Sample Wt.(g)
2	5035	8260B	1	03/22/2010 1451	LBS		29942	5.74

Parameter	CAS Number	Analytical Method	Result	Q	PQL	MDL	Units	Run
Acetone	67-64-1	8260B	ND		20	6.7	ug/kg	2
Benzene	71-43-2	8260B	ND		5.0	1.1	ug/kg	2
Bromodichloromethane	75-27-4	8260B	ND		5.0	1.7	ug/kg	2
Bromoform	75-25-2	8260B	ND		5.0	0.70	ug/kg	2
Bromomethane (Methyl bromide)	74-83-9	8260B	ND		5.0	1.8	ug/kg	2
2-Butanone (MEK)	78-93-3	8260B	ND		10	2.4	ug/kg	2
Carbon disulfide	75-15-0	8260B	ND		5.0	1.3	ug/kg	2
Carbon tetrachloride	56-23-5	8260B	ND		5.0	1.8	ug/kg	2
Chlorobenzene	108-90-7	8260B	ND		5.0	1.7	ug/kg	2
Chloroethane	75-00-3	8260B	ND		5.0	1.3	ug/kg	2
Chloroform	67-66-3	8260B	ND		5.0	0.83	ug/kg	2
Chloromethane (Methyl chloride)	74-87-3	8260B	ND		5.0	1.0	ug/kg	2
Cyclohexane	110-82-7	8260B	ND		5.0	0.67	ug/kg	2
1,2-Dibromo-3-chloropropane (DBCP)	96-12-8	8260B	ND		5.0	1.5	ug/kg	2
Dibromochloromethane	124-48-1	8260B	ND		5.0	1.7	ug/kg	2
1,2-Dibromoethane (EDB)	106-93-4	8260B	ND		5.0	0.85	ug/kg	2
1,2-Dichlorobenzene	95-50-1	8260B	ND		5.0	1.7	ug/kg	2
1,3-Dichlorobenzene	541-73-1	8260B	ND		5.0	1.7	ug/kg	2
1,4-Dichlorobenzene	106-46-7	8260B	ND		5.0	1.7	ug/kg	2
Dichlorodifluoromethane	75-71-8	8260B	ND		5.0	1.6	ug/kg	2
1,1-Dichloroethane	75-34-3	8260B	ND		5.0	0.73	ug/kg	2
1,2-Dichloroethane	107-06-2	8260B	ND		5.0	1.0	ug/kg	2
1,1-Dichloroethene	75-35-4	8260B	ND		5.0	1.7	ug/kg	2
cis-1,2-Dichloroethene	156-59-2	8260B	ND		5.0	0.76	ug/kg	2
trans-1,2-Dichloroethene	156-60-5	8260B	ND		5.0	1.5	ug/kg	2
1,2-Dichloropropane	78-87-5	8260B	ND		5.0	0.91	ug/kg	2
cis-1,3-Dichloropropene	10061-01-5	8260B	ND		5.0	0.68	ug/kg	2
trans-1,3-Dichloropropene	10061-02-6	8260B	ND		5.0	0.82	ug/kg	2
Ethylbenzene	100-41-4	8260B	ND		5.0	1.7	ug/kg	2
2-Hexanone	591-78-6	8260B	ND		10	1.3	ug/kg	2
Isopropylbenzene	98-82-8	8260B	ND		5.0	0.80	ug/kg	2
Methyl acetate	79-20-9	8260B	ND		5.0	0.67	ug/kg	2
Methyl tertiary butyl ether (MTBE)	1634-04-4	8260B	ND		5.0	0.40	ug/kg	2
4-Methyl-2-pentanone	108-10-1	8260B	ND		10	1.5	ug/kg	2
Methylcyclohexane	108-87-2	8260B	ND		5.0	0.61	ug/kg	2
Methylene chloride	75-09-2	8260B	ND		5.0	2.6	ug/kg	2
Styrene	100-42-5	8260B	ND		5.0	1.1	ug/kg	2
1,1,2,2-Tetrachloroethane	79-34-5	8260B	ND		5.0	0.47	ug/kg	2
Tetrachloroethene	127-18-4	8260B	ND		5.0	2.3	ug/kg	2
Toluene	108-88-3	8260B	ND		5.0	1.7	ug/kg	2
1,1,2-Trichloro-1,2,2-Trifluoroethane	76-13-1	8260B	ND		5.0	2.1	ug/kg	2
1,2,4-Trichlorobenzene	120-82-1	8260B	ND		5.0	1.7	ug/kg	2
1,1,1-Trichloroethane	71-55-6	8260B	ND		5.0	0.85	ug/kg	2
1,1,2-Trichloroethane	79-00-5	8260B	ND		5.0	0.79	ug/kg	2

PQL = Practical quantitation limit
B = Detected in the method blank
E = Quantitation of compound exceeded the calibration range
ND = Not detected at or above the MDL
J = Estimated result < PQL and ≥ MDL
P = The RPD between two GC columns exceeds 40%
Where applicable, all soil sample analysis are reported on a dry weight basis unless flagged with a "W"
N = Recovery is out of criteria
H = Out of holding time

Volatile Organic Compounds by GC/MS

Client: **ARCADIS U.S., Inc.**
Laboratory ID: **LC17068-002**
Description: **F39SB009 (3.0-3.5)**
Matrix: **Solid**
Date Sampled: **03/15/2010 1355**
% Solids: **87.3** **03/17/2010 2329**
Date Received: **03/17/2010**

Run	Prep Method	Analytical Method	Dilution	Analysis Date	Analyst	Prep Date	Batch	Sample Wt.(g)
2	5035	8260B	1	03/22/2010 1451	LBS		29942	5.74

Parameter	CAS Number	Analytical Method	Result	Q	PQL	MDL	Units	Run
Trichloroethene	79-01-6	8260B	ND		5.0	1.9	ug/kg	2
Trichlorofluoromethane	75-69-4	8260B	ND		5.0	1.5	ug/kg	2
Vinyl chloride	75-01-4	8260B	ND		5.0	0.86	ug/kg	2
Xylenes (total)	1330-20-7	8260B	ND		5.0	2.9	ug/kg	2

Surrogate	Q	Run 2 % Recovery	Acceptance Limits
1,2-Dichloroethane-d4		96	53-142
Bromofluorobenzene		94	47-138
Toluene-d8		106	68-124

PQL = Practical quantitation limit
B = Detected in the method blank
E = Quantitation of compound exceeded the calibration range
ND = Not detected at or above the MDL
J = Estimated result < PQL and ≥ MDL
P = The RPD between two GC columns exceeds 40%
Where applicable, all soil sample analysis are reported on a dry weight basis unless flagged with a "W"
N = Recovery is out of criteria
H = Out of holding time

Semivolatile Organic Compounds by GC/MS

Client: **ARCADIS U.S., Inc.**
Laboratory ID: **LC17068-002**
Description: **F39SB009 (3.0-3.5)**
Matrix: **Solid**
Date Sampled: **03/15/2010 1355**
% Solids: **87.3** **03/17/2010 2329**
Date Received: **03/17/2010**

Run	Prep Method	Analytical Method	Dilution	Analysis Date	Analyst	Prep Date	Batch
1	3550C	8270D	1	03/22/2010 1457	JGH	03/19/2010 1000	29722

Parameter	CAS Number	Analytical Method	Result	Q	PQL	MDL	Units	Run
Acenaphthene	83-32-9	8270D	ND		76	12	ug/kg	1
Acenaphthylene	208-96-8	8270D	ND		76	12	ug/kg	1
Acetophenone	98-86-2	8270D	ND		76	20	ug/kg	1
Anthracene	120-12-7	8270D	ND		76	8.3	ug/kg	1
Atrazine	1912-24-9	8270D	ND		76	19	ug/kg	1
Benzaldehyde	100-52-7	8270D	ND		76	19	ug/kg	1
Benzo(a)anthracene	56-55-3	8270D	ND		76	9.9	ug/kg	1
Benzo(a)pyrene	50-32-8	8270D	ND		76	11	ug/kg	1
Benzo(b)fluoranthene	205-99-2	8270D	ND		76	11	ug/kg	1
Benzo(g,h,i)perylene	191-24-2	8270D	ND		76	13	ug/kg	1
Benzo(k)fluoranthene	207-08-9	8270D	ND		76	11	ug/kg	1
1,1'-Biphenyl	92-52-4	8270D	ND		76	11	ug/kg	1
4-Bromophenyl phenyl ether	101-55-3	8270D	ND		76	11	ug/kg	1
Butyl benzyl phthalate	85-68-7	8270D	ND		150	50	ug/kg	1
Caprolactam	105-60-2	8270D	ND		76	19	ug/kg	1
Carbazole	86-74-8	8270D	ND		76	16	ug/kg	1
4-Chloro-3-methyl phenol	59-50-7	8270D	ND		76	9.5	ug/kg	1
4-Chloroaniline	106-47-8	8270D	ND		76	7.6	ug/kg	1
bis(2-Chloroethoxy)methane	111-91-1	8270D	ND		76	11	ug/kg	1
bis(2-Chloroethyl)ether	111-44-4	8270D	ND		76	10	ug/kg	1
bis(2-Chloroisopropyl)ether	108-60-1	8270D	ND		76	12	ug/kg	1
2-Chloronaphthalene	91-58-7	8270D	ND		76	12	ug/kg	1
2-Chlorophenol	95-57-8	8270D	ND		76	10	ug/kg	1
4-Chlorophenyl phenyl ether	7005-72-3	8270D	ND		76	13	ug/kg	1
Chrysene	218-01-9	8270D	ND		76	12	ug/kg	1
Dibenzo(a,h)anthracene	53-70-3	8270D	ND		76	10	ug/kg	1
Dibenzofuran	132-64-9	8270D	ND		76	12	ug/kg	1
3,3'-Dichlorobenzidine	91-94-1	8270D	ND		370	41	ug/kg	1
2,4-Dichlorophenol	120-83-2	8270D	ND		76	12	ug/kg	1
Diethylphthalate	84-66-2	8270D	ND		76	25	ug/kg	1
Dimethyl phthalate	131-11-3	8270D	ND		76	25	ug/kg	1
2,4-Dimethylphenol	105-67-9	8270D	ND		76	14	ug/kg	1
Di-n-butyl phthalate	84-74-2	8270D	ND		76	25	ug/kg	1
4,6-Dinitro-2-methylphenol	534-52-1	8270D	ND		370	150	ug/kg	1
2,4-Dinitrophenol	51-28-5	8270D	ND		370	130	ug/kg	1
2,4-Dinitrotoluene	121-14-2	8270D	ND		150	21	ug/kg	1
2,6-Dinitrotoluene	606-20-2	8270D	ND		150	19	ug/kg	1
Di-n-octylphthalate	117-84-0	8270D	ND		76	36	ug/kg	1
bis(2-Ethylhexyl)phthalate	117-81-7	8270D	ND		76	25	ug/kg	1
Fluoranthene	206-44-0	8270D	ND		76	12	ug/kg	1
Fluorene	86-73-7	8270D	ND		76	10	ug/kg	1
Hexachlorobenzene	118-74-1	8270D	ND		76	17	ug/kg	1
Hexachlorobutadiene	87-68-3	8270D	ND		76	12	ug/kg	1
Hexachlorocyclopentadiene	77-47-4	8270D	ND		370	28	ug/kg	1

PQL = Practical quantitation limit
B = Detected in the method blank
E = Quantitation of compound exceeded the calibration range
ND = Not detected at or above the MDL
J = Estimated result < PQL and ≥ MDL
P = The RPD between two GC columns exceeds 40%
Where applicable, all soil sample analysis are reported on a dry weight basis unless flagged with a "W"
N = Recovery is out of criteria
H = Out of holding time

Semivolatile Organic Compounds by GC/MS

Client: **ARCADIS U.S., Inc.**
Laboratory ID: **LC17068-002**
Description: **F39SB009 (3.0-3.5)**
Matrix: **Solid**
Date Sampled: **03/15/2010 1355**
% Solids: **87.3** **03/17/2010 2329**
Date Received: **03/17/2010**

Run	Prep Method	Analytical Method	Dilution	Analysis Date	Analyst	Prep Date	Batch
1	3550C	8270D	1	03/22/2010 1457	JGH	03/19/2010 1000	29722

Parameter	CAS Number	Analytical Method	Result	Q	PQL	MDL	Units	Run
Hexachloroethane	67-72-1	8270D	ND		76	10	ug/kg	1
Indeno(1,2,3-c,d)pyrene	193-39-5	8270D	ND		76	11	ug/kg	1
Isophorone	78-59-1	8270D	ND		76	8.3	ug/kg	1
2-Methylnaphthalene	91-57-6	8270D	ND		76	11	ug/kg	1
2-Methylphenol	95-48-7	8270D	ND		76	6.8	ug/kg	1
3 & 4-Methylphenol	106-44-5	8270D	ND		150	13	ug/kg	1
Naphthalene	91-20-3	8270D	ND		76	11	ug/kg	1
2-Nitroaniline	88-74-4	8270D	ND		150	26	ug/kg	1
3-Nitroaniline	99-09-2	8270D	ND		150	44	ug/kg	1
4-Nitroaniline	100-01-6	8270D	ND		150	21	ug/kg	1
Nitrobenzene	98-95-3	8270D	ND		76	6.1	ug/kg	1
2-Nitrophenol	88-75-5	8270D	ND		150	21	ug/kg	1
4-Nitrophenol	100-02-7	8270D	ND		370	110	ug/kg	1
N-Nitrosodi-n-propylamine	621-64-7	8270D	ND		76	14	ug/kg	1
N-Nitrosodiphenylamine (Diphenylamine)	86-30-6	8270D	ND		76	9.3	ug/kg	1
Pentachlorophenol	87-86-5	8270D	ND		370	160	ug/kg	1
Phenanthrene	85-01-8	8270D	ND		76	10	ug/kg	1
Phenol	108-95-2	8270D	ND		76	10	ug/kg	1
Pyrene	129-00-0	8270D	ND		76	15	ug/kg	1
2,4,5-Trichlorophenol	95-95-4	8270D	ND		76	11	ug/kg	1
2,4,6-Trichlorophenol	88-06-2	8270D	ND		76	11	ug/kg	1

Surrogate	Q	Run 1 % Recovery	Acceptance Limits
2-Fluorobiphenyl		65	33-102
2-Fluorophenol		60	28-104
Nitrobenzene-d5		63	22-109
Phenol-d5		61	27-103
Terphenyl-d14		72	41-120
2,4,6-Tribromophenol		80	30-117

PQL = Practical quantitation limit
B = Detected in the method blank
E = Quantitation of compound exceeded the calibration range
ND = Not detected at or above the MDL
J = Estimated result < PQL and ≥ MDL
P = The RPD between two GC columns exceeds 40%
Where applicable, all soil sample analysis are reported on a dry weight basis unless flagged with a "W"
N = Recovery is out of criteria
H = Out of holding time

RCRA Metals

Client: **ARCADIS U.S., Inc.**
Laboratory ID: **LC17068-002**
Description: **F39SB009 (3.0-3.5)**
Matrix: **Solid**
Date Sampled: **03/15/2010 1355**
% Solids: **87.3** **03/17/2010 2329**
Date Received: **03/17/2010**

Run	Prep Method	Analytical Method	Dilution	Analysis Date	Analyst	Prep Date	Batch
1		7471B	1	03/22/2010 2345	BNW	03/22/2010 2050	29905
1	3050B	6010C	1	03/23/2010 2259	CDF	03/22/2010 1730	29899

Parameter	CAS Number	Analytical Method	Result	Q	PQL	MDL	Units	Run
Arsenic	**7440-38-2**	**6010C**	**0.70**		**0.55**	**0.21**	**mg/kg**	**1**
Barium	**7440-39-3**	**6010C**	**8.1**		**1.4**	**0.10**	**mg/kg**	**1**
Cadmium	**7440-43-9**	**6010C**	**0.045**	**BJ**	**0.11**	**0.012**	**mg/kg**	**1**
Chromium	**7440-47-3**	**6010C**	**3.4**	**B**	**0.28**	**0.056**	**mg/kg**	**1**
Lead	**7439-92-1**	**6010C**	**5.4**		**0.55**	**0.10**	**mg/kg**	**1**
Mercury	**7439-97-6**	**7471B**	**0.028**	**J**	**0.094**	**0.0067**	**mg/kg**	**1**
Selenium	**7782-49-2**	**6010C**	**0.51**	**BJ**	**0.55**	**0.19**	**mg/kg**	**1**
Silver	7440-22-4	6010C	ND		0.28	0.046	mg/kg	1

PQL = Practical quantitation limit
B = Detected in the method blank
E = Quantitation of compound exceeded the calibration range
ND = Not detected at or above the MDL
J = Estimated result < PQL and ≥ MDL
P = The RPD between two GC columns exceeds 40%
Where applicable, all soil sample analysis are reported on a dry weight basis unless flagged with a "W"
N = Recovery is out of criteria
H = Out of holding time

Volatile Organic Compounds by GC/MS

Client: **ARCADIS U.S., Inc.**
Laboratory ID: **LC17068-003**
Description: **F39SB001 (4.5-5.5)**
Matrix: **Solid**
Date Sampled: **03/15/2010 1520**
% Solids: **85.4** **03/17/2010 2329**
Date Received: **03/17/2010**

Run	Prep Method	Analytical Method	Dilution	Analysis Date	Analyst	Prep Date	Batch	Sample Wt.(g)
2	5035	8260B	1	03/22/2010 1515	LBS		29942	6.49

Parameter	CAS Number	Analytical Method	Result	Q	PQL	MDL	Units	Run
Acetone	67-64-1	8260B	ND		18	6.0	ug/kg	2
Benzene	71-43-2	8260B	ND		4.5	0.99	ug/kg	2
Bromodichloromethane	75-27-4	8260B	ND		4.5	1.5	ug/kg	2
Bromoform	75-25-2	8260B	ND		4.5	0.63	ug/kg	2
Bromomethane (Methyl bromide)	74-83-9	8260B	ND		4.5	1.6	ug/kg	2
2-Butanone (MEK)	78-93-3	8260B	ND		9.0	2.2	ug/kg	2
Carbon disulfide	75-15-0	8260B	ND		4.5	1.2	ug/kg	2
Carbon tetrachloride	56-23-5	8260B	ND		4.5	1.6	ug/kg	2
Chlorobenzene	108-90-7	8260B	ND		4.5	1.5	ug/kg	2
Chloroethane	75-00-3	8260B	ND		4.5	1.2	ug/kg	2
Chloroform	67-66-3	8260B	ND		4.5	0.75	ug/kg	2
Chloromethane (Methyl chloride)	74-87-3	8260B	ND		4.5	0.90	ug/kg	2
Cyclohexane	110-82-7	8260B	ND		4.5	0.61	ug/kg	2
1,2-Dibromo-3-chloropropane (DBCP)	96-12-8	8260B	ND		4.5	1.4	ug/kg	2
Dibromochloromethane	124-48-1	8260B	ND		4.5	1.5	ug/kg	2
1,2-Dibromoethane (EDB)	106-93-4	8260B	ND		4.5	0.77	ug/kg	2
1,2-Dichlorobenzene	95-50-1	8260B	ND		4.5	1.5	ug/kg	2
1,3-Dichlorobenzene	541-73-1	8260B	ND		4.5	1.5	ug/kg	2
1,4-Dichlorobenzene	106-46-7	8260B	ND		4.5	1.5	ug/kg	2
Dichlorodifluoromethane	75-71-8	8260B	ND		4.5	1.4	ug/kg	2
1,1-Dichloroethane	75-34-3	8260B	ND		4.5	0.66	ug/kg	2
1,2-Dichloroethane	107-06-2	8260B	ND		4.5	0.90	ug/kg	2
1,1-Dichloroethene	75-35-4	8260B	ND		4.5	1.5	ug/kg	2
cis-1,2-Dichloroethene	156-59-2	8260B	ND		4.5	0.69	ug/kg	2
trans-1,2-Dichloroethene	156-60-5	8260B	ND		4.5	1.4	ug/kg	2
1,2-Dichloropropane	78-87-5	8260B	ND		4.5	0.82	ug/kg	2
cis-1,3-Dichloropropene	10061-01-5	8260B	ND		4.5	0.61	ug/kg	2
trans-1,3-Dichloropropene	10061-02-6	8260B	ND		4.5	0.74	ug/kg	2
Ethylbenzene	100-41-4	8260B	ND		4.5	1.5	ug/kg	2
2-Hexanone	591-78-6	8260B	ND		9.0	1.2	ug/kg	2
Isopropylbenzene	98-82-8	8260B	ND		4.5	0.72	ug/kg	2
Methyl acetate	79-20-9	8260B	ND		4.5	0.60	ug/kg	2
Methyl tertiary butyl ether (MTBE)	1634-04-4	8260B	ND		4.5	0.36	ug/kg	2
4-Methyl-2-pentanone	108-10-1	8260B	ND		9.0	1.4	ug/kg	2
Methylcyclohexane	108-87-2	8260B	ND		4.5	0.55	ug/kg	2
Methylene chloride	75-09-2	8260B	ND		4.5	2.3	ug/kg	2
Styrene	100-42-5	8260B	ND		4.5	0.99	ug/kg	2
1,1,2,2-Tetrachloroethane	79-34-5	8260B	ND		4.5	0.42	ug/kg	2
Tetrachloroethene	127-18-4	8260B	ND		4.5	2.1	ug/kg	2
Toluene	108-88-3	8260B	ND		4.5	1.5	ug/kg	2
1,1,2-Trichloro-1,2,2-Trifluoroethane	76-13-1	8260B	ND		4.5	1.9	ug/kg	2
1,2,4-Trichlorobenzene	120-82-1	8260B	ND		4.5	1.5	ug/kg	2
1,1,1-Trichloroethane	71-55-6	8260B	ND		4.5	0.77	ug/kg	2
1,1,2-Trichloroethane	79-00-5	8260B	ND		4.5	0.71	ug/kg	2

PQL = Practical quantitation limit
B = Detected in the method blank
E = Quantitation of compound exceeded the calibration range
ND = Not detected at or above the MDL
J = Estimated result < PQL and ≥ MDL
P = The RPD between two GC columns exceeds 40%
Where applicable, all soil sample analysis are reported on a dry weight basis unless flagged with a "W"
N = Recovery is out of criteria
H = Out of holding time

Volatile Organic Compounds by GC/MS

Client: **ARCADIS U.S., Inc.**
Laboratory ID: **LC17068-003**
Description: **F39SB001 (4.5-5.5)**
Matrix: **Solid**
Date Sampled: **03/15/2010 1520**
% Solids: **85.4** **03/17/2010 2329**
Date Received: **03/17/2010**

Run	Prep Method	Analytical Method	Dilution	Analysis Date	Analyst	Prep Date	Batch	Sample Wt.(g)
2	5035	8260B	1	03/22/2010 1515	LBS		29942	6.49

Parameter	CAS Number	Analytical Method	Result	Q	PQL	MDL	Units	Run
Trichloroethene	79-01-6	8260B	ND		4.5	1.7	ug/kg	2
Trichlorofluoromethane	75-69-4	8260B	ND		4.5	1.4	ug/kg	2
Vinyl chloride	75-01-4	8260B	ND		4.5	0.78	ug/kg	2
Xylenes (total)	1330-20-7	8260B	ND		4.5	2.6	ug/kg	2

Surrogate	Q	Run 2 % Recovery	Acceptance Limits
1,2-Dichloroethane-d4		88	53-142
Bromofluorobenzene		81	47-138
Toluene-d8		96	68-124

PQL = Practical quantitation limit
B = Detected in the method blank
E = Quantitation of compound exceeded the calibration range
ND = Not detected at or above the MDL
J = Estimated result < PQL and ≥ MDL
P = The RPD between two GC columns exceeds 40%
Where applicable, all soil sample analysis are reported on a dry weight basis unless flagged with a "W"
N = Recovery is out of criteria
H = Out of holding time

Semivolatile Organic Compounds by GC/MS

Client: **ARCADIS U.S., Inc.**
Laboratory ID: **LC17068-003**
Description: **F39SB001 (4.5-5.5)**
Matrix: **Solid**
Date Sampled: **03/15/2010 1520**
% Solids: **85.4** **03/17/2010 2329**
Date Received: **03/17/2010**

Run	Prep Method	Analytical Method	Dilution	Analysis Date	Analyst	Prep Date	Batch
1	3550C	8270D	1	03/22/2010 1529	JGH	03/19/2010 1000	29722

Parameter	CAS Number	Analytical Method	Result	Q	PQL	MDL	Units	Run
Acenaphthene	83-32-9	8270D	ND		78	12	ug/kg	1
Acenaphthylene	208-96-8	8270D	ND		78	12	ug/kg	1
Acetophenone	98-86-2	8270D	ND		78	21	ug/kg	1
Anthracene	120-12-7	8270D	ND		78	8.6	ug/kg	1
Atrazine	1912-24-9	8270D	ND		78	20	ug/kg	1
Benzaldehyde	100-52-7	8270D	ND		78	20	ug/kg	1
Benzo(a)anthracene	56-55-3	8270D	ND		78	10	ug/kg	1
Benzo(a)pyrene	50-32-8	8270D	ND		78	11	ug/kg	1
Benzo(b)fluoranthene	205-99-2	8270D	ND		78	11	ug/kg	1
Benzo(g,h,i)perylene	191-24-2	8270D	ND		78	13	ug/kg	1
Benzo(k)fluoranthene	207-08-9	8270D	ND		78	11	ug/kg	1
1,1'-Biphenyl	92-52-4	8270D	ND		78	12	ug/kg	1
4-Bromophenyl phenyl ether	101-55-3	8270D	ND		78	11	ug/kg	1
Butyl benzyl phthalate	85-68-7	8270D	ND		150	51	ug/kg	1
Caprolactam	105-60-2	8270D	ND		78	20	ug/kg	1
Carbazole	86-74-8	8270D	ND		78	17	ug/kg	1
4-Chloro-3-methyl phenol	59-50-7	8270D	ND		78	9.8	ug/kg	1
4-Chloroaniline	106-47-8	8270D	ND		78	7.9	ug/kg	1
bis(2-Chloroethoxy)methane	111-91-1	8270D	ND		78	12	ug/kg	1
bis(2-Chloroethyl)ether	111-44-4	8270D	ND		78	11	ug/kg	1
bis(2-Chloroisopropyl)ether	108-60-1	8270D	ND		78	13	ug/kg	1
2-Chloronaphthalene	91-58-7	8270D	ND		78	13	ug/kg	1
2-Chlorophenol	95-57-8	8270D	ND		78	11	ug/kg	1
4-Chlorophenyl phenyl ether	7005-72-3	8270D	ND		78	13	ug/kg	1
Chrysene	218-01-9	8270D	ND		78	13	ug/kg	1
Dibenzo(a,h)anthracene	53-70-3	8270D	ND		78	11	ug/kg	1
Dibenzofuran	132-64-9	8270D	ND		78	12	ug/kg	1
3,3'-Dichlorobenzidine	91-94-1	8270D	ND		380	42	ug/kg	1
2,4-Dichlorophenol	120-83-2	8270D	ND		78	12	ug/kg	1
Diethylphthalate	84-66-2	8270D	ND		78	26	ug/kg	1
Dimethyl phthalate	131-11-3	8270D	ND		78	26	ug/kg	1
2,4-Dimethylphenol	105-67-9	8270D	ND		78	15	ug/kg	1
Di-n-butyl phthalate	84-74-2	8270D	ND		78	26	ug/kg	1
4,6-Dinitro-2-methylphenol	534-52-1	8270D	ND		380	150	ug/kg	1
2,4-Dinitrophenol	51-28-5	8270D	ND		380	130	ug/kg	1
2,4-Dinitrotoluene	121-14-2	8270D	ND		150	21	ug/kg	1
2,6-Dinitrotoluene	606-20-2	8270D	ND		150	20	ug/kg	1
Di-n-octylphthalate	117-84-0	8270D	ND		78	37	ug/kg	1
bis(2-Ethylhexyl)phthalate	117-81-7	8270D	ND		78	26	ug/kg	1
Fluoranthene	206-44-0	8270D	ND		78	12	ug/kg	1
Fluorene	86-73-7	8270D	ND		78	10	ug/kg	1
Hexachlorobenzene	118-74-1	8270D	ND		78	17	ug/kg	1
Hexachlorobutadiene	87-68-3	8270D	ND		78	13	ug/kg	1
Hexachlorocyclopentadiene	77-47-4	8270D	ND		380	29	ug/kg	1

PQL = Practical quantitation limit
B = Detected in the method blank
E = Quantitation of compound exceeded the calibration range
ND = Not detected at or above the MDL
J = Estimated result < PQL and ≥ MDL
P = The RPD between two GC columns exceeds 40%
Where applicable, all soil sample analysis are reported on a dry weight basis unless flagged with a "W"
N = Recovery is out of criteria
H = Out of holding time

Semivolatile Organic Compounds by GC/MS

Client: **ARCADIS U.S., Inc.**
Laboratory ID: **LC17068-003**
Description: **F39SB001 (4.5-5.5)**
Matrix: **Solid**
Date Sampled: **03/15/2010 1520**
% Solids: **85.4** **03/17/2010 2329**
Date Received: **03/17/2010**

Run	Prep Method	Analytical Method	Dilution	Analysis Date	Analyst	Prep Date	Batch
1	3550C	8270D	1	03/22/2010 1529	JGH	03/19/2010 1000	29722

Parameter	CAS Number	Analytical Method	Result	Q	PQL	MDL	Units	Run
Hexachloroethane	67-72-1	8270D	ND		78	10	ug/kg	1
Indeno(1,2,3-c,d)pyrene	193-39-5	8270D	ND		78	11	ug/kg	1
Isophorone	78-59-1	8270D	ND		78	8.5	ug/kg	1
2-Methylnaphthalene	91-57-6	8270D	ND		78	12	ug/kg	1
2-Methylphenol	95-48-7	8270D	ND		78	7.0	ug/kg	1
3 & 4-Methylphenol	106-44-5	8270D	ND		150	14	ug/kg	1
Naphthalene	91-20-3	8270D	ND		78	12	ug/kg	1
2-Nitroaniline	88-74-4	8270D	ND		150	27	ug/kg	1
3-Nitroaniline	99-09-2	8270D	ND		150	45	ug/kg	1
4-Nitroaniline	100-01-6	8270D	ND		150	22	ug/kg	1
Nitrobenzene	98-95-3	8270D	ND		78	6.2	ug/kg	1
2-Nitrophenol	88-75-5	8270D	ND		150	21	ug/kg	1
4-Nitrophenol	100-02-7	8270D	ND		380	110	ug/kg	1
N-Nitrosodi-n-propylamine	621-64-7	8270D	ND		78	15	ug/kg	1
N-Nitrosodiphenylamine (Diphenylamine)	86-30-6	8270D	ND		78	9.6	ug/kg	1
Pentachlorophenol	87-86-5	8270D	ND		380	160	ug/kg	1
Phenanthrene	85-01-8	8270D	ND		78	10	ug/kg	1
Phenol	108-95-2	8270D	ND		78	11	ug/kg	1
Pyrene	129-00-0	8270D	ND		78	15	ug/kg	1
2,4,5-Trichlorophenol	95-95-4	8270D	ND		78	11	ug/kg	1
2,4,6-Trichlorophenol	88-06-2	8270D	ND		78	11	ug/kg	1

Surrogate	Q	Run 1 % Recovery	Acceptance Limits
2-Fluorobiphenyl		65	33-102
2-Fluorophenol		61	28-104
Nitrobenzene-d5		67	22-109
Phenol-d5		64	27-103
Terphenyl-d14		67	41-120
2,4,6-Tribromophenol		91	30-117

PQL = Practical quantitation limit
B = Detected in the method blank
E = Quantitation of compound exceeded the calibration range
ND = Not detected at or above the MDL
J = Estimated result < PQL and ≥ MDL
P = The RPD between two GC columns exceeds 40%
Where applicable, all soil sample analysis are reported on a dry weight basis unless flagged with a "W"
N = Recovery is out of criteria
H = Out of holding time

RCRA Metals

Client: **ARCADIS U.S., Inc.**
Laboratory ID: **LC17068-003**
Description: **F39SB001 (4.5-5.5)**
Matrix: **Solid**
Date Sampled: **03/15/2010 1520**
% Solids: **85.4** **03/17/2010 2329**
Date Received: **03/17/2010**

Run	Prep Method	Analytical Method	Dilution	Analysis Date	Analyst	Prep Date	Batch
1		7471B	1	03/22/2010 2349	BNW	03/22/2010 2050	29905
1	3050B	6010C	1	03/23/2010 2308	CDF	03/22/2010 1730	29899

Parameter	CAS Number	Analytical Method	Result	Q	PQL	MDL	Units	Run
Arsenic	**7440-38-2**	**6010C**	**0.56**		**0.55**	**0.21**	**mg/kg**	**1**
Barium	**7440-39-3**	**6010C**	**7.0**		**1.4**	**0.099**	**mg/kg**	**1**
Cadmium	**7440-43-9**	**6010C**	**0.049**	**BJ**	**0.11**	**0.011**	**mg/kg**	**1**
Chromium	**7440-47-3**	**6010C**	**2.6**	**B**	**0.27**	**0.055**	**mg/kg**	**1**
Lead	**7439-92-1**	**6010C**	**3.6**		**0.55**	**0.10**	**mg/kg**	**1**
Mercury	**7439-97-6**	**7471B**	**0.014**	**J**	**0.092**	**0.0066**	**mg/kg**	**1**
Selenium	**7782-49-2**	**6010C**	**0.67**	**B**	**0.55**	**0.19**	**mg/kg**	**1**
Silver	7440-22-4	6010C	ND		0.27	0.046	mg/kg	1

PQL = Practical quantitation limit
B = Detected in the method blank
E = Quantitation of compound exceeded the calibration range
ND = Not detected at or above the MDL
J = Estimated result < PQL and ≥ MDL
P = The RPD between two GC columns exceeds 40%
Where applicable, all soil sample analysis are reported on a dry weight basis unless flagged with a "W"
N = Recovery is out of criteria
H = Out of holding time

Volatile Organic Compounds by GC/MS

Client: **ARCADIS U.S., Inc.**
Laboratory ID: **LC17068-004**
Description: **F39SB003 (4-5)**
Matrix: **Solid**
Date Sampled: **03/15/2010 1610**
% Solids: **89.0** **03/17/2010 2329**
Date Received: **03/17/2010**

Run	Prep Method	Analytical Method	Dilution	Analysis Date	Analyst	Prep Date	Batch	Sample Wt.(g)
2	5035	8260B	1	03/22/2010 1538	LBS		29942	6.27

Parameter	CAS Number	Analytical Method	Result	Q	PQL	MDL	Units	Run
Acetone	**67-64-1**	**8260B**	**63**		**18**	**6.0**	**ug/kg**	**2**
Benzene	71-43-2	8260B	ND		4.5	0.99	ug/kg	2
Bromodichloromethane	75-27-4	8260B	ND		4.5	1.5	ug/kg	2
Bromoform	75-25-2	8260B	ND		4.5	0.63	ug/kg	2
Bromomethane (Methyl bromide)	74-83-9	8260B	ND		4.5	1.6	ug/kg	2
2-Butanone (MEK)	78-93-3	8260B	ND		9.0	2.1	ug/kg	2
Carbon disulfide	75-15-0	8260B	ND		4.5	1.2	ug/kg	2
Carbon tetrachloride	56-23-5	8260B	ND		4.5	1.6	ug/kg	2
Chlorobenzene	108-90-7	8260B	ND		4.5	1.5	ug/kg	2
Chloroethane	75-00-3	8260B	ND		4.5	1.2	ug/kg	2
Chloroform	67-66-3	8260B	ND		4.5	0.74	ug/kg	2
Chloromethane (Methyl chloride)	74-87-3	8260B	ND		4.5	0.90	ug/kg	2
Cyclohexane	110-82-7	8260B	ND		4.5	0.60	ug/kg	2
1,2-Dibromo-3-chloropropane (DBCP)	96-12-8	8260B	ND		4.5	1.3	ug/kg	2
Dibromochloromethane	124-48-1	8260B	ND		4.5	1.5	ug/kg	2
1,2-Dibromoethane (EDB)	106-93-4	8260B	ND		4.5	0.76	ug/kg	2
1,2-Dichlorobenzene	95-50-1	8260B	ND		4.5	1.5	ug/kg	2
1,3-Dichlorobenzene	541-73-1	8260B	ND		4.5	1.5	ug/kg	2
1,4-Dichlorobenzene	106-46-7	8260B	ND		4.5	1.5	ug/kg	2
Dichlorodifluoromethane	75-71-8	8260B	ND		4.5	1.4	ug/kg	2
1,1-Dichloroethane	75-34-3	8260B	ND		4.5	0.65	ug/kg	2
1,2-Dichloroethane	107-06-2	8260B	ND		4.5	0.90	ug/kg	2
1,1-Dichloroethene	75-35-4	8260B	ND		4.5	1.5	ug/kg	2
cis-1,2-Dichloroethene	156-59-2	8260B	ND		4.5	0.68	ug/kg	2
trans-1,2-Dichloroethene	156-60-5	8260B	ND		4.5	1.3	ug/kg	2
1,2-Dichloropropane	78-87-5	8260B	ND		4.5	0.82	ug/kg	2
cis-1,3-Dichloropropene	10061-01-5	8260B	ND		4.5	0.61	ug/kg	2
trans-1,3-Dichloropropene	10061-02-6	8260B	ND		4.5	0.73	ug/kg	2
Ethylbenzene	100-41-4	8260B	ND		4.5	1.5	ug/kg	2
2-Hexanone	591-78-6	8260B	ND		9.0	1.2	ug/kg	2
Isopropylbenzene	98-82-8	8260B	ND		4.5	0.72	ug/kg	2
Methyl acetate	79-20-9	8260B	ND		4.5	0.60	ug/kg	2
Methyl tertiary butyl ether (MTBE)	1634-04-4	8260B	ND		4.5	0.36	ug/kg	2
4-Methyl-2-pentanone	108-10-1	8260B	ND		9.0	1.3	ug/kg	2
Methylcyclohexane	108-87-2	8260B	ND		4.5	0.55	ug/kg	2
Methylene chloride	75-09-2	8260B	ND		4.5	2.3	ug/kg	2
Styrene	100-42-5	8260B	ND		4.5	0.99	ug/kg	2
1,1,2,2-Tetrachloroethane	79-34-5	8260B	ND		4.5	0.42	ug/kg	2
Tetrachloroethene	127-18-4	8260B	ND		4.5	2.1	ug/kg	2
Toluene	108-88-3	8260B	ND		4.5	1.5	ug/kg	2
1,1,2-Trichloro-1,2,2-Trifluoroethane	76-13-1	8260B	ND		4.5	1.9	ug/kg	2
1,2,4-Trichlorobenzene	120-82-1	8260B	ND		4.5	1.5	ug/kg	2
1,1,1-Trichloroethane	71-55-6	8260B	ND		4.5	0.76	ug/kg	2
1,1,2-Trichloroethane	79-00-5	8260B	ND		4.5	0.71	ug/kg	2

PQL = Practical quantitation limit
B = Detected in the method blank
E = Quantitation of compound exceeded the calibration range
ND = Not detected at or above the MDL
J = Estimated result < PQL and ≥ MDL
P = The RPD between two GC columns exceeds 40%
Where applicable, all soil sample analysis are reported on a dry weight basis unless flagged with a "W"
N = Recovery is out of criteria
H = Out of holding time

Volatile Organic Compounds by GC/MS

Client: **ARCADIS U.S., Inc.**
Laboratory ID: **LC17068-004**
Description: **F39SB003 (4-5)**
Matrix: **Solid**
Date Sampled: **03/15/2010 1610**
% Solids: **89.0** **03/17/2010 2329**
Date Received: **03/17/2010**

Run	Prep Method	Analytical Method	Dilution	Analysis Date	Analyst	Prep Date	Batch	Sample Wt.(g)
2	5035	8260B	1	03/22/2010 1538	LBS		29942	6.27

Parameter	CAS Number	Analytical Method	Result	Q	PQL	MDL	Units	Run
Trichloroethene	79-01-6	8260B	ND		4.5	1.7	ug/kg	2
Trichlorofluoromethane	75-69-4	8260B	ND		4.5	1.3	ug/kg	2
Vinyl chloride	75-01-4	8260B	ND		4.5	0.77	ug/kg	2
Xylenes (total)	1330-20-7	8260B	ND		4.5	2.6	ug/kg	2

Surrogate	Q	Run 2 % Recovery	Acceptance Limits
1,2-Dichloroethane-d4		99	53-142
Bromofluorobenzene		93	47-138
Toluene-d8		107	68-124

PQL = Practical quantitation limit
B = Detected in the method blank
E = Quantitation of compound exceeded the calibration range
ND = Not detected at or above the MDL
J = Estimated result < PQL and ≥ MDL
P = The RPD between two GC columns exceeds 40%
Where applicable, all soil sample analysis are reported on a dry weight basis unless flagged with a "W"
N = Recovery is out of criteria
H = Out of holding time

Semivolatile Organic Compounds by GC/MS

Client: **ARCADIS U.S., Inc.**
Laboratory ID: **LC17068-004**
Description: **F39SB003 (4-5)**
Matrix: **Solid**
Date Sampled: **03/15/2010 1610**
% Solids: **89.0** **03/17/2010 2329**
Date Received: **03/17/2010**

Run	Prep Method	Analytical Method	Dilution	Analysis Date	Analyst	Prep Date	Batch
1	3550C	8270D	1	03/22/2010 1810	WD	03/19/2010 1000	29722

Parameter	CAS Number	Analytical Method	Result	Q	PQL	MDL	Units	Run
Acenaphthene	83-32-9	8270D	ND		75	12	ug/kg	1
Acenaphthylene	208-96-8	8270D	ND		75	12	ug/kg	1
Acetophenone	98-86-2	8270D	ND		75	20	ug/kg	1
Anthracene	120-12-7	8270D	ND		75	8.3	ug/kg	1
Atrazine	1912-24-9	8270D	ND		75	19	ug/kg	1
Benzaldehyde	100-52-7	8270D	ND		75	19	ug/kg	1
Benzo(a)anthracene	56-55-3	8270D	ND		75	9.9	ug/kg	1
Benzo(a)pyrene	50-32-8	8270D	ND		75	10	ug/kg	1
Benzo(b)fluoranthene	205-99-2	8270D	ND		75	11	ug/kg	1
Benzo(g,h,i)perylene	191-24-2	8270D	ND		75	13	ug/kg	1
Benzo(k)fluoranthene	207-08-9	8270D	ND		75	11	ug/kg	1
1,1'-Biphenyl	92-52-4	8270D	ND		75	11	ug/kg	1
4-Bromophenyl phenyl ether	101-55-3	8270D	ND		75	11	ug/kg	1
Butyl benzyl phthalate	85-68-7	8270D	ND		150	49	ug/kg	1
Caprolactam	105-60-2	8270D	ND		75	19	ug/kg	1
Carbazole	86-74-8	8270D	ND		75	16	ug/kg	1
4-Chloro-3-methyl phenol	59-50-7	8270D	ND		75	9.5	ug/kg	1
4-Chloroaniline	106-47-8	8270D	ND		75	7.6	ug/kg	1
bis(2-Chloroethoxy)methane	111-91-1	8270D	ND		75	11	ug/kg	1
bis(2-Chloroethyl)ether	111-44-4	8270D	ND		75	10	ug/kg	1
bis(2-Chloroisopropyl)ether	108-60-1	8270D	ND		75	12	ug/kg	1
2-Chloronaphthalene	91-58-7	8270D	ND		75	12	ug/kg	1
2-Chlorophenol	95-57-8	8270D	ND		75	10	ug/kg	1
4-Chlorophenyl phenyl ether	7005-72-3	8270D	ND		75	13	ug/kg	1
Chrysene	218-01-9	8270D	ND		75	12	ug/kg	1
Dibenzo(a,h)anthracene	53-70-3	8270D	ND		75	10	ug/kg	1
Dibenzofuran	132-64-9	8270D	ND		75	12	ug/kg	1
3,3'-Dichlorobenzidine	91-94-1	8270D	ND		370	41	ug/kg	1
2,4-Dichlorophenol	120-83-2	8270D	ND		75	12	ug/kg	1
Diethylphthalate	84-66-2	8270D	ND		75	25	ug/kg	1
Dimethyl phthalate	131-11-3	8270D	ND		75	25	ug/kg	1
2,4-Dimethylphenol	105-67-9	8270D	ND		75	14	ug/kg	1
Di-n-butyl phthalate	84-74-2	8270D	ND		75	25	ug/kg	1
4,6-Dinitro-2-methylphenol	534-52-1	8270D	ND		370	150	ug/kg	1
2,4-Dinitrophenol	51-28-5	8270D	ND		370	130	ug/kg	1
2,4-Dinitrotoluene	121-14-2	8270D	ND		150	20	ug/kg	1
2,6-Dinitrotoluene	606-20-2	8270D	ND		150	19	ug/kg	1
Di-n-octylphthalate	117-84-0	8270D	ND		75	36	ug/kg	1
bis(2-Ethylhexyl)phthalate	117-81-7	8270D	ND		75	25	ug/kg	1
Fluoranthene	206-44-0	8270D	ND		75	12	ug/kg	1
Fluorene	86-73-7	8270D	ND		75	10	ug/kg	1
Hexachlorobenzene	118-74-1	8270D	ND		75	16	ug/kg	1
Hexachlorobutadiene	87-68-3	8270D	ND		75	12	ug/kg	1
Hexachlorocyclopentadiene	77-47-4	8270D	ND		370	28	ug/kg	1

PQL = Practical quantitation limit
B = Detected in the method blank
E = Quantitation of compound exceeded the calibration range
ND = Not detected at or above the MDL
J = Estimated result < PQL and ≥ MDL
P = The RPD between two GC columns exceeds 40%
Where applicable, all soil sample analysis are reported on a dry weight basis unless flagged with a "W"
N = Recovery is out of criteria
H = Out of holding time

Semivolatile Organic Compounds by GC/MS

Client: **ARCADIS U.S., Inc.**
Laboratory ID: **LC17068-004**
Description: **F39SB003 (4-5)**
Matrix: **Solid**
Date Sampled: **03/15/2010 1610**
% Solids: **89.0** **03/17/2010 2329**
Date Received: **03/17/2010**

Run	Prep Method	Analytical Method	Dilution	Analysis Date	Analyst	Prep Date	Batch
1	3550C	8270D	1	03/22/2010 1810	WD	03/19/2010 1000	29722

Parameter	CAS Number	Analytical Method	Result	Q	PQL	MDL	Units	Run
Hexachloroethane	67-72-1	8270D	ND		75	10	ug/kg	1
Indeno(1,2,3-c,d)pyrene	193-39-5	8270D	ND		75	11	ug/kg	1
Isophorone	78-59-1	8270D	ND		75	8.3	ug/kg	1
2-Methylnaphthalene	91-57-6	8270D	ND		75	11	ug/kg	1
2-Methylphenol	95-48-7	8270D	ND		75	6.8	ug/kg	1
3 & 4-Methylphenol	106-44-5	8270D	ND		150	13	ug/kg	1
Naphthalene	91-20-3	8270D	ND		75	11	ug/kg	1
2-Nitroaniline	88-74-4	8270D	ND		150	26	ug/kg	1
3-Nitroaniline	99-09-2	8270D	ND		150	43	ug/kg	1
4-Nitroaniline	100-01-6	8270D	ND		150	21	ug/kg	1
Nitrobenzene	98-95-3	8270D	ND		75	6.0	ug/kg	1
2-Nitrophenol	88-75-5	8270D	ND		150	21	ug/kg	1
4-Nitrophenol	100-02-7	8270D	ND		370	110	ug/kg	1
N-Nitrosodi-n-propylamine	621-64-7	8270D	ND		75	14	ug/kg	1
N-Nitrosodiphenylamine (Diphenylamine)	86-30-6	8270D	ND		75	9.3	ug/kg	1
Pentachlorophenol	87-86-5	8270D	ND		370	160	ug/kg	1
Phenanthrene	85-01-8	8270D	ND		75	10	ug/kg	1
Phenol	108-95-2	8270D	ND		75	10	ug/kg	1
Pyrene	129-00-0	8270D	ND		75	15	ug/kg	1
2,4,5-Trichlorophenol	95-95-4	8270D	ND		75	10	ug/kg	1
2,4,6-Trichlorophenol	88-06-2	8270D	ND		75	11	ug/kg	1

Surrogate	Q	Run 1 % Recovery	Acceptance Limits
2-Fluorobiphenyl		73	33-102
2-Fluorophenol		72	28-104
Nitrobenzene-d5		68	22-109
Phenol-d5		74	27-103
Terphenyl-d14		71	41-120
2,4,6-Tribromophenol		81	30-117

PQL = Practical quantitation limit
B = Detected in the method blank
E = Quantitation of compound exceeded the calibration range
ND = Not detected at or above the MDL
J = Estimated result < PQL and ≥ MDL
P = The RPD between two GC columns exceeds 40%
Where applicable, all soil sample analysis are reported on a dry weight basis unless flagged with a "W"
N = Recovery is out of criteria
H = Out of holding time

RCRA Metals

Client: **ARCADIS U.S., Inc.**
Laboratory ID: **LC17068-004**
Description: **F39SB003 (4-5)**
Matrix: **Solid**
Date Sampled: **03/15/2010 1610**
% Solids: **89.0** **03/17/2010 2329**
Date Received: **03/17/2010**

Run	Prep Method	Analytical Method	Dilution	Analysis Date	Analyst	Prep Date	Batch
1		7471B	1	03/22/2010 2351	BNW	03/22/2010 2050	29905
1	3050B	6010C	1	03/23/2010 2322	CDF	03/22/2010 1730	29899

Parameter	CAS Number	Analytical Method	Result	Q	PQL	MDL	Units	Run
Arsenic	**7440-38-2**	**6010C**	**0.31**	**J**	**0.54**	**0.20**	**mg/kg**	**1**
Barium	**7440-39-3**	**6010C**	**18**		**1.4**	**0.097**	**mg/kg**	**1**
Cadmium	**7440-43-9**	**6010C**	**0.027**	**BJ**	**0.11**	**0.011**	**mg/kg**	**1**
Chromium	**7440-47-3**	**6010C**	**3.4**	**B**	**0.27**	**0.054**	**mg/kg**	**1**
Lead	**7439-92-1**	**6010C**	**3.5**		**0.54**	**0.099**	**mg/kg**	**1**
Mercury	**7439-97-6**	**7471B**	**0.023**	**J**	**0.088**	**0.0063**	**mg/kg**	**1**
Selenium	**7782-49-2**	**6010C**	**0.79**	**B**	**0.54**	**0.19**	**mg/kg**	**1**
Silver	7440-22-4	6010C	ND		0.27	0.045	mg/kg	1

PQL = Practical quantitation limit
B = Detected in the method blank
E = Quantitation of compound exceeded the calibration range
ND = Not detected at or above the MDL
J = Estimated result < PQL and ≥ MDL
P = The RPD between two GC columns exceeds 40%
Where applicable, all soil sample analysis are reported on a dry weight basis unless flagged with a "W"
N = Recovery is out of criteria
H = Out of holding time

Volatile Organic Compounds by GC/MS

Client: **ARCADIS U.S., Inc.**
Laboratory ID: **LC17068-005**
Description: **F39SB004 (4-5)**
Matrix: **Solid**
Date Sampled: **03/15/2010 1645**
% Solids: **90.7** **03/17/2010 2329**
Date Received: **03/17/2010**

Run	Prep Method	Analytical Method	Dilution	Analysis Date	Analyst	Prep Date	Batch	Sample Wt.(g)
1	5035	8260B	1	03/20/2010 1921	DLB		29863	5.89

Parameter	CAS Number	Analytical Method	Result	Q	PQL	MDL	Units	Run
Acetone	**67-64-1**	**8260B**	**12**	**J**	**19**	**6.3**	**ug/kg**	**1**
Benzene	71-43-2	8260B	ND		4.7	1.0	ug/kg	1
Bromodichloromethane	75-27-4	8260B	ND		4.7	1.6	ug/kg	1
Bromoform	75-25-2	8260B	ND		4.7	0.66	ug/kg	1
Bromomethane (Methyl bromide)	74-83-9	8260B	ND		4.7	1.7	ug/kg	1
2-Butanone (MEK)	78-93-3	8260B	ND		9.4	2.2	ug/kg	1
Carbon disulfide	75-15-0	8260B	ND		4.7	1.2	ug/kg	1
Carbon tetrachloride	56-23-5	8260B	ND		4.7	1.7	ug/kg	1
Chlorobenzene	108-90-7	8260B	ND		4.7	1.6	ug/kg	1
Chloroethane	75-00-3	8260B	ND		4.7	1.2	ug/kg	1
Chloroform	67-66-3	8260B	ND		4.7	0.78	ug/kg	1
Chloromethane (Methyl chloride)	74-87-3	8260B	ND		4.7	0.94	ug/kg	1
Cyclohexane	110-82-7	8260B	ND		4.7	0.63	ug/kg	1
1,2-Dibromo-3-chloropropane (DBCP)	96-12-8	8260B	ND		4.7	1.4	ug/kg	1
Dibromochloromethane	124-48-1	8260B	ND		4.7	1.6	ug/kg	1
1,2-Dibromoethane (EDB)	106-93-4	8260B	ND		4.7	0.80	ug/kg	1
1,2-Dichlorobenzene	95-50-1	8260B	ND		4.7	1.6	ug/kg	1
1,3-Dichlorobenzene	541-73-1	8260B	ND		4.7	1.6	ug/kg	1
1,4-Dichlorobenzene	106-46-7	8260B	ND		4.7	1.6	ug/kg	1
Dichlorodifluoromethane	75-71-8	8260B	ND		4.7	1.5	ug/kg	1
1,1-Dichloroethane	75-34-3	8260B	ND		4.7	0.68	ug/kg	1
1,2-Dichloroethane	107-06-2	8260B	ND		4.7	0.94	ug/kg	1
1,1-Dichloroethene	75-35-4	8260B	ND		4.7	1.6	ug/kg	1
cis-1,2-Dichloroethene	156-59-2	8260B	ND		4.7	0.71	ug/kg	1
trans-1,2-Dichloroethene	156-60-5	8260B	ND		4.7	1.4	ug/kg	1
1,2-Dichloropropane	78-87-5	8260B	ND		4.7	0.85	ug/kg	1
cis-1,3-Dichloropropene	10061-01-5	8260B	ND		4.7	0.64	ug/kg	1
trans-1,3-Dichloropropene	10061-02-6	8260B	ND		4.7	0.77	ug/kg	1
Ethylbenzene	100-41-4	8260B	ND		4.7	1.6	ug/kg	1
2-Hexanone	591-78-6	8260B	ND		9.4	1.2	ug/kg	1
Isopropylbenzene	98-82-8	8260B	ND		4.7	0.75	ug/kg	1
Methyl acetate	79-20-9	8260B	ND		4.7	0.63	ug/kg	1
Methyl tertiary butyl ether (MTBE)	1634-04-4	8260B	ND		4.7	0.37	ug/kg	1
4-Methyl-2-pentanone	108-10-1	8260B	ND		9.4	1.4	ug/kg	1
Methylcyclohexane	108-87-2	8260B	ND		4.7	0.57	ug/kg	1
Methylene chloride	75-09-2	8260B	ND		4.7	2.4	ug/kg	1
Styrene	100-42-5	8260B	ND		4.7	1.0	ug/kg	1
1,1,2,2-Tetrachloroethane	79-34-5	8260B	ND		4.7	0.44	ug/kg	1
Tetrachloroethene	127-18-4	8260B	ND		4.7	2.2	ug/kg	1
Toluene	108-88-3	8260B	ND		4.7	1.6	ug/kg	1
1,1,2-Trichloro-1,2,2-Trifluoroethane	76-13-1	8260B	ND		4.7	2.0	ug/kg	1
1,2,4-Trichlorobenzene	120-82-1	8260B	ND		4.7	1.6	ug/kg	1
1,1,1-Trichloroethane	71-55-6	8260B	ND		4.7	0.80	ug/kg	1
1,1,2-Trichloroethane	79-00-5	8260B	ND		4.7	0.74	ug/kg	1

PQL = Practical quantitation limit
B = Detected in the method blank
E = Quantitation of compound exceeded the calibration range
ND = Not detected at or above the MDL
J = Estimated result < PQL and ≥ MDL
P = The RPD between two GC columns exceeds 40%
Where applicable, all soil sample analysis are reported on a dry weight basis unless flagged with a "W"
N = Recovery is out of criteria
H = Out of holding time

Volatile Organic Compounds by GC/MS

Client: **ARCADIS U.S., Inc.**	Laboratory ID: **LC17068-005**
Description: **F39SB004 (4-5)**	Matrix: **Solid**
Date Sampled: **03/15/2010 1645**	% Solids: **90.7** **03/17/2010 2329**
Date Received: **03/17/2010**	

Run	Prep Method	Analytical Method	Dilution	Analysis Date	Analyst	Prep Date	Batch	Sample Wt.(g)
1	5035	8260B	1	03/20/2010 1921	DLB		29863	5.89

Parameter	CAS Number	Analytical Method	Result	Q	PQL	MDL	Units	Run
Trichloroethene	79-01-6	8260B	ND		4.7	1.8	ug/kg	1
Trichlorofluoromethane	75-69-4	8260B	ND		4.7	1.4	ug/kg	1
Vinyl chloride	75-01-4	8260B	ND		4.7	0.80	ug/kg	1
Xylenes (total)	1330-20-7	8260B	ND		4.7	2.7	ug/kg	1

Surrogate	Q	Run 1 % Recovery	Acceptance Limits
1,2-Dichloroethane-d4		97	53-142
Bromofluorobenzene		101	47-138
Toluene-d8		98	68-124

PQL = Practical quantitation limit
ND = Not detected at or above the MDL
Where applicable, all soil sample analysis are reported on a dry weight basis unless flagged with a "W"
B = Detected in the method blank
J = Estimated result < PQL and ≥ MDL
E = Quantitation of compound exceeded the calibration range
P = The RPD between two GC columns exceeds 40%
N = Recovery is out of criteria
H = Out of holding time

Semivolatile Organic Compounds by GC/MS

Client: **ARCADIS U.S., Inc.**
Laboratory ID: **LC17068-005**
Description: **F39SB004 (4-5)**
Matrix: **Solid**
Date Sampled: **03/15/2010 1645**
% Solids: **90.7** **03/17/2010 2329**
Date Received: **03/17/2010**

Run	Prep Method	Analytical Method	Dilution	Analysis Date	Analyst	Prep Date	Batch
1	3550C	8270D	1	03/22/2010 1829	WD	03/19/2010 1000	29722

Parameter	CAS Number	Analytical Method	Result	Q	PQL	MDL	Units	Run
Acenaphthene	83-32-9	8270D	ND		72	12	ug/kg	1
Acenaphthylene	208-96-8	8270D	ND		72	11	ug/kg	1
Acetophenone	98-86-2	8270D	ND		72	19	ug/kg	1
Anthracene	120-12-7	8270D	ND		72	7.9	ug/kg	1
Atrazine	1912-24-9	8270D	ND		72	18	ug/kg	1
Benzaldehyde	100-52-7	8270D	ND		72	18	ug/kg	1
Benzo(a)anthracene	56-55-3	8270D	ND		72	9.5	ug/kg	1
Benzo(a)pyrene	50-32-8	8270D	ND		72	10	ug/kg	1
Benzo(b)fluoranthene	205-99-2	8270D	ND		72	10	ug/kg	1
Benzo(g,h,i)perylene	191-24-2	8270D	ND		72	12	ug/kg	1
Benzo(k)fluoranthene	207-08-9	8270D	ND		72	10	ug/kg	1
1,1'-Biphenyl	92-52-4	8270D	ND		72	11	ug/kg	1
4-Bromophenyl phenyl ether	101-55-3	8270D	ND		72	11	ug/kg	1
Butyl benzyl phthalate	85-68-7	8270D	ND		140	47	ug/kg	1
Caprolactam	105-60-2	8270D	ND		72	18	ug/kg	1
Carbazole	86-74-8	8270D	ND		72	15	ug/kg	1
4-Chloro-3-methyl phenol	59-50-7	8270D	ND		72	9.1	ug/kg	1
4-Chloroaniline	106-47-8	8270D	ND		72	7.3	ug/kg	1
bis(2-Chloroethoxy)methane	111-91-1	8270D	ND		72	11	ug/kg	1
bis(2-Chloroethyl)ether	111-44-4	8270D	ND		72	9.9	ug/kg	1
bis(2-Chloroisopropyl)ether	108-60-1	8270D	ND		72	12	ug/kg	1
2-Chloronaphthalene	91-58-7	8270D	ND		72	12	ug/kg	1
2-Chlorophenol	95-57-8	8270D	ND		72	9.9	ug/kg	1
4-Chlorophenyl phenyl ether	7005-72-3	8270D	ND		72	12	ug/kg	1
Chrysene	218-01-9	8270D	ND		72	12	ug/kg	1
Dibenzo(a,h)anthracene	53-70-3	8270D	ND		72	9.8	ug/kg	1
Dibenzofuran	132-64-9	8270D	ND		72	11	ug/kg	1
3,3'-Dichlorobenzidine	91-94-1	8270D	ND		360	39	ug/kg	1
2,4-Dichlorophenol	120-83-2	8270D	ND		72	11	ug/kg	1
Diethylphthalate	84-66-2	8270D	ND		72	24	ug/kg	1
Dimethyl phthalate	131-11-3	8270D	ND		72	24	ug/kg	1
2,4-Dimethylphenol	105-67-9	8270D	ND		72	13	ug/kg	1
Di-n-butyl phthalate	84-74-2	8270D	ND		72	24	ug/kg	1
4,6-Dinitro-2-methylphenol	534-52-1	8270D	ND		360	140	ug/kg	1
2,4-Dinitrophenol	51-28-5	8270D	ND		360	120	ug/kg	1
2,4-Dinitrotoluene	121-14-2	8270D	ND		140	20	ug/kg	1
2,6-Dinitrotoluene	606-20-2	8270D	ND		140	19	ug/kg	1
Di-n-octylphthalate	117-84-0	8270D	ND		72	34	ug/kg	1
bis(2-Ethylhexyl)phthalate	117-81-7	8270D	ND		72	24	ug/kg	1
Fluoranthene	206-44-0	8270D	ND		72	11	ug/kg	1
Fluorene	86-73-7	8270D	ND		72	9.7	ug/kg	1
Hexachlorobenzene	118-74-1	8270D	ND		72	16	ug/kg	1
Hexachlorobutadiene	87-68-3	8270D	ND		72	12	ug/kg	1
Hexachlorocyclopentadiene	77-47-4	8270D	ND		360	26	ug/kg	1

PQL = Practical quantitation limit
B = Detected in the method blank
E = Quantitation of compound exceeded the calibration range
ND = Not detected at or above the MDL
J = Estimated result < PQL and ≥ MDL
P = The RPD between two GC columns exceeds 40%
Where applicable, all soil sample analysis are reported on a dry weight basis unless flagged with a "W"
N = Recovery is out of criteria
H = Out of holding time

Semivolatile Organic Compounds by GC/MS

Client: **ARCADIS U.S., Inc.**
Laboratory ID: **LC17068-005**
Description: **F39SB004 (4-5)**
Matrix: **Solid**
Date Sampled: **03/15/2010 1645**
% Solids: **90.7** **03/17/2010 2329**
Date Received: **03/17/2010**

Run	Prep Method	Analytical Method	Dilution	Analysis Date	Analyst	Prep Date	Batch
1	3550C	8270D	1	03/22/2010 1829	WD	03/19/2010 1000	29722

Parameter	CAS Number	Analytical Method	Result	Q	PQL	MDL	Units	Run
Hexachloroethane	67-72-1	8270D	ND		72	9.5	ug/kg	1
Indeno(1,2,3-c,d)pyrene	193-39-5	8270D	ND		72	10	ug/kg	1
Isophorone	78-59-1	8270D	ND		72	7.9	ug/kg	1
2-Methylnaphthalene	91-57-6	8270D	ND		72	11	ug/kg	1
2-Methylphenol	95-48-7	8270D	ND		72	6.5	ug/kg	1
3 & 4-Methylphenol	106-44-5	8270D	ND		140	13	ug/kg	1
Naphthalene	91-20-3	8270D	ND		72	11	ug/kg	1
2-Nitroaniline	88-74-4	8270D	ND		140	25	ug/kg	1
3-Nitroaniline	99-09-2	8270D	ND		140	42	ug/kg	1
4-Nitroaniline	100-01-6	8270D	ND		140	20	ug/kg	1
Nitrobenzene	98-95-3	8270D	ND		72	5.8	ug/kg	1
2-Nitrophenol	88-75-5	8270D	ND		140	20	ug/kg	1
4-Nitrophenol	100-02-7	8270D	ND		360	100	ug/kg	1
N-Nitrosodi-n-propylamine	621-64-7	8270D	ND		72	14	ug/kg	1
N-Nitrosodiphenylamine (Diphenylamine)	86-30-6	8270D	ND		72	8.9	ug/kg	1
Pentachlorophenol	87-86-5	8270D	ND		360	150	ug/kg	1
Phenanthrene	85-01-8	8270D	ND		72	9.7	ug/kg	1
Phenol	108-95-2	8270D	ND		72	9.7	ug/kg	1
Pyrene	129-00-0	8270D	ND		72	14	ug/kg	1
2,4,5-Trichlorophenol	95-95-4	8270D	ND		72	10	ug/kg	1
2,4,6-Trichlorophenol	88-06-2	8270D	ND		72	11	ug/kg	1

Surrogate	Q	Run 1 % Recovery	Acceptance Limits
2-Fluorobiphenyl		66	33-102
2-Fluorophenol		63	28-104
Nitrobenzene-d5		58	22-109
Phenol-d5		68	27-103
Terphenyl-d14		73	41-120
2,4,6-Tribromophenol		80	30-117

PQL = Practical quantitation limit
B = Detected in the method blank
E = Quantitation of compound exceeded the calibration range
ND = Not detected at or above the MDL
J = Estimated result < PQL and ≥ MDL
P = The RPD between two GC columns exceeds 40%
Where applicable, all soil sample analysis are reported on a dry weight basis unless flagged with a "W"
N = Recovery is out of criteria
H = Out of holding time

RCRA Metals

Client:	**ARCADIS U.S., Inc.**	Laboratory ID:	**LC17068-005**
Description:	**F39SB004 (4-5)**	Matrix:	**Solid**
Date Sampled:	**03/15/2010 1645**	% Solids:	**90.7 03/17/2010 2329**
Date Received:	**03/17/2010**		

Run	Prep Method	Analytical Method	Dilution	Analysis Date	Analyst	Prep Date	Batch
1		7471B	1	03/22/2010 2353	BNW	03/22/2010 2050	29905
1	3050B	6010C	1	03/23/2010 2326	CDF	03/22/2010 1730	29899

Parameter	CAS Number	Analytical Method	Result	Q	PQL	MDL	Units	Run
Arsenic	7440-38-2	6010C	ND		0.52	0.20	mg/kg	1
Barium	**7440-39-3**	**6010C**	**2.2**		**1.4**	**0.095**	**mg/kg**	**1**
Cadmium	**7440-43-9**	**6010C**	**0.029**	**BJ**	**0.10**	**0.011**	**mg/kg**	**1**
Chromium	**7440-47-3**	**6010C**	**2.2**	**B**	**0.26**	**0.053**	**mg/kg**	**1**
Lead	**7439-92-1**	**6010C**	**1.5**		**0.52**	**0.097**	**mg/kg**	**1**
Mercury	**7439-97-6**	**7471B**	**0.0099**	**J**	**0.089**	**0.0063**	**mg/kg**	**1**
Selenium	**7782-49-2**	**6010C**	**0.44**	**BJ**	**0.52**	**0.18**	**mg/kg**	**1**
Silver	7440-22-4	6010C	ND		0.26	0.044	mg/kg	1

PQL = Practical quantitation limit
ND = Not detected at or above the MDL
Where applicable, all soil sample analysis are reported on a dry weight basis unless flagged with a "W"
B = Detected in the method blank
J = Estimated result < PQL and ≥ MDL
E = Quantitation of compound exceeded the calibration range
P = The RPD between two GC columns exceeds 40%
N = Recovery is out of criteria
H = Out of holding time

Volatile Organic Compounds by GC/MS

Client: **ARCADIS U.S., Inc.**
Laboratory ID: **LC17068-006**
Description: **F39SB005 (4-5)**
Matrix: **Solid**
Date Sampled: **03/15/2010 1700**
% Solids: **91.0** **03/17/2010 2329**
Date Received: **03/17/2010**

Run	Prep Method	Analytical Method	Dilution	Analysis Date	Analyst	Prep Date	Batch	Sample Wt.(g)
1	5035	8260B	1	03/22/2010 1602	LBS		29942	5.82

Parameter	CAS Number	Analytical Method	Result	Q	PQL	MDL	Units	Run
Acetone	**67-64-1**	**8260B**	**24**		**19**	**6.3**	**ug/kg**	**1**
Benzene	71-43-2	8260B	ND		4.7	1.0	ug/kg	1
Bromodichloromethane	75-27-4	8260B	ND		4.7	1.6	ug/kg	1
Bromoform	75-25-2	8260B	ND		4.7	0.66	ug/kg	1
Bromomethane (Methyl bromide)	74-83-9	8260B	ND		4.7	1.7	ug/kg	1
2-Butanone (MEK)	78-93-3	8260B	ND		9.4	2.3	ug/kg	1
Carbon disulfide	75-15-0	8260B	ND		4.7	1.2	ug/kg	1
Carbon tetrachloride	56-23-5	8260B	ND		4.7	1.7	ug/kg	1
Chlorobenzene	108-90-7	8260B	ND		4.7	1.6	ug/kg	1
Chloroethane	75-00-3	8260B	ND		4.7	1.2	ug/kg	1
Chloroform	67-66-3	8260B	ND		4.7	0.78	ug/kg	1
Chloromethane (Methyl chloride)	74-87-3	8260B	ND		4.7	0.94	ug/kg	1
Cyclohexane	110-82-7	8260B	ND		4.7	0.64	ug/kg	1
1,2-Dibromo-3-chloropropane (DBCP)	96-12-8	8260B	ND		4.7	1.4	ug/kg	1
Dibromochloromethane	124-48-1	8260B	ND		4.7	1.6	ug/kg	1
1,2-Dibromoethane (EDB)	106-93-4	8260B	ND		4.7	0.80	ug/kg	1
1,2-Dichlorobenzene	95-50-1	8260B	ND		4.7	1.6	ug/kg	1
1,3-Dichlorobenzene	541-73-1	8260B	ND		4.7	1.6	ug/kg	1
1,4-Dichlorobenzene	106-46-7	8260B	ND		4.7	1.6	ug/kg	1
Dichlorodifluoromethane	75-71-8	8260B	ND		4.7	1.5	ug/kg	1
1,1-Dichloroethane	75-34-3	8260B	ND		4.7	0.69	ug/kg	1
1,2-Dichloroethane	107-06-2	8260B	ND		4.7	0.94	ug/kg	1
1,1-Dichloroethene	75-35-4	8260B	ND		4.7	1.6	ug/kg	1
cis-1,2-Dichloroethene	156-59-2	8260B	ND		4.7	0.72	ug/kg	1
trans-1,2-Dichloroethene	156-60-5	8260B	ND		4.7	1.4	ug/kg	1
1,2-Dichloropropane	78-87-5	8260B	ND		4.7	0.86	ug/kg	1
cis-1,3-Dichloropropene	10061-01-5	8260B	ND		4.7	0.64	ug/kg	1
trans-1,3-Dichloropropene	10061-02-6	8260B	ND		4.7	0.77	ug/kg	1
Ethylbenzene	100-41-4	8260B	ND		4.7	1.6	ug/kg	1
2-Hexanone	591-78-6	8260B	ND		9.4	1.2	ug/kg	1
Isopropylbenzene	**98-82-8**	**8260B**	**0.81**	**J**	**4.7**	**0.76**	**ug/kg**	**1**
Methyl acetate	79-20-9	8260B	ND		4.7	0.63	ug/kg	1
Methyl tertiary butyl ether (MTBE)	1634-04-4	8260B	ND		4.7	0.38	ug/kg	1
4-Methyl-2-pentanone	108-10-1	8260B	ND		9.4	1.4	ug/kg	1
Methylcyclohexane	108-87-2	8260B	ND		4.7	0.58	ug/kg	1
Methylene chloride	75-09-2	8260B	ND		4.7	2.5	ug/kg	1
Styrene	100-42-5	8260B	ND		4.7	1.0	ug/kg	1
1,1,2,2-Tetrachloroethane	79-34-5	8260B	ND		4.7	0.44	ug/kg	1
Tetrachloroethene	127-18-4	8260B	ND		4.7	2.2	ug/kg	1
Toluene	108-88-3	8260B	ND		4.7	1.6	ug/kg	1
1,1,2-Trichloro-1,2,2-Trifluoroethane	76-13-1	8260B	ND		4.7	2.0	ug/kg	1
1,2,4-Trichlorobenzene	120-82-1	8260B	ND		4.7	1.6	ug/kg	1
1,1,1-Trichloroethane	71-55-6	8260B	ND		4.7	0.80	ug/kg	1
1,1,2-Trichloroethane	79-00-5	8260B	ND		4.7	0.75	ug/kg	1

PQL = Practical quantitation limit
B = Detected in the method blank
E = Quantitation of compound exceeded the calibration range
ND = Not detected at or above the MDL
J = Estimated result < PQL and ≥ MDL
P = The RPD between two GC columns exceeds 40%
Where applicable, all soil sample analysis are reported on a dry weight basis unless flagged with a "W"
N = Recovery is out of criteria
H = Out of holding time

Volatile Organic Compounds by GC/MS

Client: **ARCADIS U.S., Inc.**	Laboratory ID: **LC17068-006**
Description: **F39SB005 (4-5)**	Matrix: **Solid**
Date Sampled: **03/15/2010 1700**	% Solids: **91.0** **03/17/2010 2329**
Date Received: **03/17/2010**	

Run	Prep Method	Analytical Method	Dilution	Analysis Date	Analyst	Prep Date	Batch	Sample Wt.(g)
1	5035	8260B	1	03/22/2010 1602	LBS		29942	5.82

Parameter	CAS Number	Analytical Method	Result	Q	PQL	MDL	Units	Run
Trichloroethene	79-01-6	8260B	ND		4.7	1.8	ug/kg	1
Trichlorofluoromethane	75-69-4	8260B	ND		4.7	1.4	ug/kg	1
Vinyl chloride	75-01-4	8260B	ND		4.7	0.81	ug/kg	1
Xylenes (total)	1330-20-7	8260B	ND		4.7	2.7	ug/kg	1

Surrogate	Q	Run 1 % Recovery	Acceptance Limits
1,2-Dichloroethane-d4		96	53-142
Bromofluorobenzene		104	47-138
Toluene-d8		107	68-124

PQL = Practical quantitation limit
ND = Not detected at or above the MDL
Where applicable, all soil sample analysis are reported on a dry weight basis unless flagged with a "W"
B = Detected in the method blank
J = Estimated result < PQL and ≥ MDL
E = Quantitation of compound exceeded the calibration range
P = The RPD between two GC columns exceeds 40%
N = Recovery is out of criteria
H = Out of holding time

Semivolatile Organic Compounds by GC/MS

Client: **ARCADIS U.S., Inc.**
Laboratory ID: **LC17068-006**
Description: **F39SB005 (4-5)**
Matrix: **Solid**
Date Sampled: **03/15/2010 1700**
% Solids: **91.0** **03/17/2010 2329**
Date Received: **03/17/2010**

Run	Prep Method	Analytical Method	Dilution	Analysis Date	Analyst	Prep Date	Batch
1	3550C	8270D	1	03/22/2010 1848	WD	03/19/2010 1000	29722

Parameter	CAS Number	Analytical Method	Result	Q	PQL	MDL	Units	Run
Acenaphthene	83-32-9	8270D	ND		73	12	ug/kg	1
Acenaphthylene	208-96-8	8270D	ND		73	11	ug/kg	1
Acetophenone	98-86-2	8270D	ND		73	20	ug/kg	1
Anthracene	120-12-7	8270D	ND		73	8.1	ug/kg	1
Atrazine	1912-24-9	8270D	ND		73	19	ug/kg	1
Benzaldehyde	100-52-7	8270D	ND		73	19	ug/kg	1
Benzo(a)anthracene	56-55-3	8270D	ND		73	9.6	ug/kg	1
Benzo(a)pyrene	50-32-8	8270D	ND		73	10	ug/kg	1
Benzo(b)fluoranthene	205-99-2	8270D	ND		73	10	ug/kg	1
Benzo(g,h,i)perylene	191-24-2	8270D	ND		73	13	ug/kg	1
Benzo(k)fluoranthene	207-08-9	8270D	ND		73	10	ug/kg	1
1,1'-Biphenyl	92-52-4	8270D	ND		73	11	ug/kg	1
4-Bromophenyl phenyl ether	101-55-3	8270D	ND		73	11	ug/kg	1
Butyl benzyl phthalate	85-68-7	8270D	ND		140	48	ug/kg	1
Caprolactam	105-60-2	8270D	ND		73	19	ug/kg	1
Carbazole	86-74-8	8270D	ND		73	16	ug/kg	1
4-Chloro-3-methyl phenol	59-50-7	8270D	ND		73	9.2	ug/kg	1
4-Chloroaniline	106-47-8	8270D	ND		73	7.4	ug/kg	1
bis(2-Chloroethoxy)methane	111-91-1	8270D	ND		73	11	ug/kg	1
bis(2-Chloroethyl)ether	111-44-4	8270D	ND		73	10	ug/kg	1
bis(2-Chloroisopropyl)ether	108-60-1	8270D	ND		73	12	ug/kg	1
2-Chloronaphthalene	91-58-7	8270D	ND		73	12	ug/kg	1
2-Chlorophenol	95-57-8	8270D	ND		73	10	ug/kg	1
4-Chlorophenyl phenyl ether	7005-72-3	8270D	ND		73	12	ug/kg	1
Chrysene	218-01-9	8270D	ND		73	12	ug/kg	1
Dibenzo(a,h)anthracene	53-70-3	8270D	ND		73	9.9	ug/kg	1
Dibenzofuran	132-64-9	8270D	ND		73	11	ug/kg	1
3,3'-Dichlorobenzidine	91-94-1	8270D	ND		360	40	ug/kg	1
2,4-Dichlorophenol	120-83-2	8270D	ND		73	11	ug/kg	1
Diethylphthalate	84-66-2	8270D	ND		73	24	ug/kg	1
Dimethyl phthalate	131-11-3	8270D	ND		73	24	ug/kg	1
2,4-Dimethylphenol	105-67-9	8270D	ND		73	14	ug/kg	1
Di-n-butyl phthalate	84-74-2	8270D	ND		73	24	ug/kg	1
4,6-Dinitro-2-methylphenol	534-52-1	8270D	ND		360	140	ug/kg	1
2,4-Dinitrophenol	51-28-5	8270D	ND		360	120	ug/kg	1
2,4-Dinitrotoluene	121-14-2	8270D	ND		140	20	ug/kg	1
2,6-Dinitrotoluene	606-20-2	8270D	ND		140	19	ug/kg	1
Di-n-octylphthalate	117-84-0	8270D	ND		73	35	ug/kg	1
bis(2-Ethylhexyl)phthalate	117-81-7	8270D	ND		73	24	ug/kg	1
Fluoranthene	206-44-0	8270D	ND		73	11	ug/kg	1
Fluorene	86-73-7	8270D	ND		73	9.8	ug/kg	1
Hexachlorobenzene	118-74-1	8270D	ND		73	16	ug/kg	1
Hexachlorobutadiene	87-68-3	8270D	ND		73	12	ug/kg	1
Hexachlorocyclopentadiene	77-47-4	8270D	ND		360	27	ug/kg	1

PQL = Practical quantitation limit
B = Detected in the method blank
E = Quantitation of compound exceeded the calibration range
ND = Not detected at or above the MDL
J = Estimated result < PQL and ≥ MDL
P = The RPD between two GC columns exceeds 40%
Where applicable, all soil sample analysis are reported on a dry weight basis unless flagged with a "W"
N = Recovery is out of criteria
H = Out of holding time

Semivolatile Organic Compounds by GC/MS

Client: **ARCADIS U.S., Inc.**
Laboratory ID: **LC17068-006**
Description: **F39SB005 (4-5)**
Matrix: **Solid**
Date Sampled: **03/15/2010 1700**
% Solids: **91.0** **03/17/2010 2329**
Date Received: **03/17/2010**

Run	Prep Method	Analytical Method	Dilution	Analysis Date	Analyst	Prep Date	Batch
1	3550C	8270D	1	03/22/2010 1848	WD	03/19/2010 1000	29722

Parameter	CAS Number	Analytical Method	Result	Q	PQL	MDL	Units	Run
Hexachloroethane	67-72-1	8270D	ND		73	9.7	ug/kg	1
Indeno(1,2,3-c,d)pyrene	193-39-5	8270D	ND		73	11	ug/kg	1
Isophorone	78-59-1	8270D	ND		73	8.0	ug/kg	1
2-Methylnaphthalene	91-57-6	8270D	ND		73	11	ug/kg	1
2-Methylphenol	95-48-7	8270D	ND		73	6.6	ug/kg	1
3 & 4-Methylphenol	106-44-5	8270D	ND		140	13	ug/kg	1
Naphthalene	91-20-3	8270D	ND		73	11	ug/kg	1
2-Nitroaniline	88-74-4	8270D	ND		140	25	ug/kg	1
3-Nitroaniline	99-09-2	8270D	ND		140	42	ug/kg	1
4-Nitroaniline	100-01-6	8270D	ND		140	21	ug/kg	1
Nitrobenzene	98-95-3	8270D	ND		73	5.9	ug/kg	1
2-Nitrophenol	88-75-5	8270D	ND		140	20	ug/kg	1
4-Nitrophenol	100-02-7	8270D	ND		360	110	ug/kg	1
N-Nitrosodi-n-propylamine	621-64-7	8270D	ND		73	14	ug/kg	1
N-Nitrosodiphenylamine (Diphenylamine)	86-30-6	8270D	ND		73	9.0	ug/kg	1
Pentachlorophenol	87-86-5	8270D	ND		360	150	ug/kg	1
Phenanthrene	85-01-8	8270D	ND		73	9.8	ug/kg	1
Phenol	108-95-2	8270D	ND		73	9.9	ug/kg	1
Pyrene	129-00-0	8270D	ND		73	14	ug/kg	1
2,4,5-Trichlorophenol	95-95-4	8270D	ND		73	10	ug/kg	1
2,4,6-Trichlorophenol	88-06-2	8270D	ND		73	11	ug/kg	1

Surrogate	Q	Run 1 % Recovery	Acceptance Limits
2-Fluorobiphenyl		77	33-102
2-Fluorophenol		78	28-104
Nitrobenzene-d5		73	22-109
Phenol-d5		79	27-103
Terphenyl-d14		78	41-120
2,4,6-Tribromophenol		85	30-117

PQL = Practical quantitation limit
B = Detected in the method blank
E = Quantitation of compound exceeded the calibration range
ND = Not detected at or above the MDL
J = Estimated result < PQL and ≥ MDL
P = The RPD between two GC columns exceeds 40%
Where applicable, all soil sample analysis are reported on a dry weight basis unless flagged with a "W"
N = Recovery is out of criteria
H = Out of holding time

RCRA Metals

Client: **ARCADIS U.S., Inc.**
Laboratory ID: **LC17068-006**
Description: **F39SB005 (4-5)**
Matrix: **Solid**
Date Sampled: **03/15/2010 1700**
% Solids: **91.0** **03/17/2010 2329**
Date Received: **03/17/2010**

Run	Prep Method	Analytical Method	Dilution	Analysis Date	Analyst	Prep Date	Batch
1		7471B	1	03/22/2010 2356	BNW	03/22/2010 2050	29905
1	3050B	6010C	1	03/23/2010 2331	CDF	03/22/2010 1730	29899

Parameter	CAS Number	Analytical Method	Result	Q	PQL	MDL	Units	Run
Arsenic	7440-38-2	6010C	ND		0.50	0.19	mg/kg	1
Barium	**7440-39-3**	**6010C**	**2.3**		**1.3**	**0.092**	**mg/kg**	**1**
Cadmium	**7440-43-9**	**6010C**	**0.022**	**BJ**	**0.10**	**0.011**	**mg/kg**	**1**
Chromium	**7440-47-3**	**6010C**	**1.3**	**B**	**0.25**	**0.051**	**mg/kg**	**1**
Lead	**7439-92-1**	**6010C**	**1.8**		**0.50**	**0.094**	**mg/kg**	**1**
Mercury	7439-97-6	7471B	ND		0.087	0.0062	mg/kg	1
Selenium	**7782-49-2**	**6010C**	**0.22**	**BJ**	**0.50**	**0.18**	**mg/kg**	**1**
Silver	7440-22-4	6010C	ND		0.25	0.042	mg/kg	1

PQL = Practical quantitation limit
B = Detected in the method blank
E = Quantitation of compound exceeded the calibration range
ND = Not detected at or above the MDL
J = Estimated result < PQL and ≥ MDL
P = The RPD between two GC columns exceeds 40%
Where applicable, all soil sample analysis are reported on a dry weight basis unless flagged with a "W"
N = Recovery is out of criteria
H = Out of holding time

Volatile Organic Compounds by GC/MS

Client: **ARCADIS U.S., Inc.**
Laboratory ID: **LC17068-007**
Description: **F39SB006 (4-5)**
Matrix: **Solid**
Date Sampled: **03/15/2010 1725**
% Solids: **90.4** **03/17/2010 2329**
Date Received: **03/17/2010**

Run	Prep Method	Analytical Method	Dilution	Analysis Date	Analyst	Prep Date	Batch	Sample Wt.(g)
2	5035	8260B	1	03/25/2010 0143	LBS		30124	6.25

Parameter	CAS Number	Analytical Method	Result	Q	PQL	MDL	Units	Run
Acetone	**67-64-1**	**8260B**	**63**		**18**	**5.9**	**ug/kg**	**2**
Benzene	71-43-2	8260B	ND		4.4	0.97	ug/kg	2
Bromodichloromethane	75-27-4	8260B	ND		4.4	1.5	ug/kg	2
Bromoform	75-25-2	8260B	ND		4.4	0.62	ug/kg	2
Bromomethane (Methyl bromide)	74-83-9	8260B	ND		4.4	1.6	ug/kg	2
2-Butanone (MEK)	78-93-3	8260B	ND		8.9	2.1	ug/kg	2
Carbon disulfide	75-15-0	8260B	ND		4.4	1.2	ug/kg	2
Carbon tetrachloride	56-23-5	8260B	ND		4.4	1.6	ug/kg	2
Chlorobenzene	108-90-7	8260B	ND		4.4	1.5	ug/kg	2
Chloroethane	75-00-3	8260B	ND		4.4	1.2	ug/kg	2
Chloroform	67-66-3	8260B	ND		4.4	0.73	ug/kg	2
Chloromethane (Methyl chloride)	74-87-3	8260B	ND		4.4	0.89	ug/kg	2
Cyclohexane	110-82-7	8260B	ND		4.4	0.60	ug/kg	2
1,2-Dibromo-3-chloropropane (DBCP)	96-12-8	8260B	ND		4.4	1.3	ug/kg	2
Dibromochloromethane	124-48-1	8260B	ND		4.4	1.5	ug/kg	2
1,2-Dibromoethane (EDB)	106-93-4	8260B	ND		4.4	0.75	ug/kg	2
1,2-Dichlorobenzene	95-50-1	8260B	ND		4.4	1.5	ug/kg	2
1,3-Dichlorobenzene	541-73-1	8260B	ND		4.4	1.5	ug/kg	2
1,4-Dichlorobenzene	106-46-7	8260B	ND		4.4	1.5	ug/kg	2
Dichlorodifluoromethane	75-71-8	8260B	ND		4.4	1.4	ug/kg	2
1,1-Dichloroethane	75-34-3	8260B	ND		4.4	0.65	ug/kg	2
1,2-Dichloroethane	107-06-2	8260B	ND		4.4	0.89	ug/kg	2
1,1-Dichloroethene	75-35-4	8260B	ND		4.4	1.5	ug/kg	2
cis-1,2-Dichloroethene	156-59-2	8260B	ND		4.4	0.67	ug/kg	2
trans-1,2-Dichloroethene	156-60-5	8260B	ND		4.4	1.3	ug/kg	2
1,2-Dichloropropane	78-87-5	8260B	ND		4.4	0.81	ug/kg	2
cis-1,3-Dichloropropene	10061-01-5	8260B	ND		4.4	0.60	ug/kg	2
trans-1,3-Dichloropropene	10061-02-6	8260B	ND		4.4	0.73	ug/kg	2
Ethylbenzene	100-41-4	8260B	ND		4.4	1.5	ug/kg	2
2-Hexanone	591-78-6	8260B	ND		8.9	1.2	ug/kg	2
Isopropylbenzene	98-82-8	8260B	ND		4.4	0.71	ug/kg	2
Methyl acetate	79-20-9	8260B	ND		4.4	0.59	ug/kg	2
Methyl tertiary butyl ether (MTBE)	1634-04-4	8260B	ND		4.4	0.35	ug/kg	2
4-Methyl-2-pentanone	108-10-1	8260B	ND		8.9	1.3	ug/kg	2
Methylcyclohexane	108-87-2	8260B	ND		4.4	0.54	ug/kg	2
Methylene chloride	75-09-2	8260B	ND		4.4	2.3	ug/kg	2
Styrene	100-42-5	8260B	ND		4.4	0.97	ug/kg	2
1,1,2,2-Tetrachloroethane	79-34-5	8260B	ND		4.4	0.42	ug/kg	2
Tetrachloroethene	127-18-4	8260B	ND		4.4	2.0	ug/kg	2
Toluene	108-88-3	8260B	ND		4.4	1.5	ug/kg	2
1,1,2-Trichloro-1,2,2-Trifluoroethane	76-13-1	8260B	ND		4.4	1.9	ug/kg	2
1,2,4-Trichlorobenzene	120-82-1	8260B	ND		4.4	1.5	ug/kg	2
1,1,1-Trichloroethane	71-55-6	8260B	ND		4.4	0.75	ug/kg	2
1,1,2-Trichloroethane	79-00-5	8260B	ND		4.4	0.70	ug/kg	2

PQL = Practical quantitation limit
B = Detected in the method blank
E = Quantitation of compound exceeded the calibration range
ND = Not detected at or above the MDL
J = Estimated result < PQL and ≥ MDL
P = The RPD between two GC columns exceeds 40%
Where applicable, all soil sample analysis are reported on a dry weight basis unless flagged with a "W"
N = Recovery is out of criteria
H = Out of holding time

Volatile Organic Compounds by GC/MS

Client: **ARCADIS U.S., Inc.**
Laboratory ID: **LC17068-007**
Description: **F39SB006 (4-5)**
Matrix: **Solid**
Date Sampled: **03/15/2010 1725**
% Solids: **90.4** **03/17/2010 2329**
Date Received: **03/17/2010**

Run	Prep Method	Analytical Method	Dilution	Analysis Date	Analyst	Prep Date	Batch	Sample Wt.(g)
2	5035	8260B	1	03/25/2010 0143	LBS		30124	6.25

Parameter	CAS Number	Analytical Method	Result	Q	PQL	MDL	Units	Run
Trichloroethene	79-01-6	8260B	ND		4.4	1.7	ug/kg	2
Trichlorofluoromethane	75-69-4	8260B	ND		4.4	1.3	ug/kg	2
Vinyl chloride	75-01-4	8260B	ND		4.4	0.76	ug/kg	2
Xylenes (total)	1330-20-7	8260B	ND		4.4	2.6	ug/kg	2

Surrogate	Q	Run 2 % Recovery	Acceptance Limits
1,2-Dichloroethane-d4		64	53-142
Bromofluorobenzene		74	47-138
Toluene-d8		90	68-124

PQL = Practical quantitation limit
B = Detected in the method blank
E = Quantitation of compound exceeded the calibration range
ND = Not detected at or above the MDL
J = Estimated result < PQL and ≥ MDL
P = The RPD between two GC columns exceeds 40%
Where applicable, all soil sample analysis are reported on a dry weight basis unless flagged with a "W"
N = Recovery is out of criteria
H = Out of holding time

Semivolatile Organic Compounds by GC/MS

Client: **ARCADIS U.S., Inc.**
Laboratory ID: **LC17068-007**
Description: **F39SB006 (4-5)**
Matrix: **Solid**
Date Sampled: **03/15/2010 1725**
% Solids: **90.4** **03/17/2010 2329**
Date Received: **03/17/2010**

Run	Prep Method	Analytical Method	Dilution	Analysis Date	Analyst	Prep Date	Batch
1	3550C	8270D	1	03/22/2010 1907	WD	03/19/2010 1000	29722

Parameter	CAS Number	Analytical Method	Result	Q	PQL	MDL	Units	Run
Acenaphthene	83-32-9	8270D	ND		74	12	ug/kg	1
Acenaphthylene	208-96-8	8270D	ND		74	11	ug/kg	1
Acetophenone	98-86-2	8270D	ND		74	20	ug/kg	1
Anthracene	120-12-7	8270D	ND		74	8.1	ug/kg	1
Atrazine	1912-24-9	8270D	ND		74	19	ug/kg	1
Benzaldehyde	**100-52-7**	**8270D**	**130**		**74**	**19**	**ug/kg**	**1**
Benzo(a)anthracene	56-55-3	8270D	ND		74	9.7	ug/kg	1
Benzo(a)pyrene	50-32-8	8270D	ND		74	10	ug/kg	1
Benzo(b)fluoranthene	205-99-2	8270D	ND		74	11	ug/kg	1
Benzo(g,h,i)perylene	191-24-2	8270D	ND		74	13	ug/kg	1
Benzo(k)fluoranthene	207-08-9	8270D	ND		74	10	ug/kg	1
1,1'-Biphenyl	92-52-4	8270D	ND		74	11	ug/kg	1
4-Bromophenyl phenyl ether	101-55-3	8270D	ND		74	11	ug/kg	1
Butyl benzyl phthalate	85-68-7	8270D	ND		140	49	ug/kg	1
Caprolactam	105-60-2	8270D	ND		74	19	ug/kg	1
Carbazole	86-74-8	8270D	ND		74	16	ug/kg	1
4-Chloro-3-methyl phenol	59-50-7	8270D	ND		74	9.3	ug/kg	1
4-Chloroaniline	106-47-8	8270D	ND		74	7.5	ug/kg	1
bis(2-Chloroethoxy)methane	111-91-1	8270D	ND		74	11	ug/kg	1
bis(2-Chloroethyl)ether	111-44-4	8270D	ND		74	10	ug/kg	1
bis(2-Chloroisopropyl)ether	108-60-1	8270D	ND		74	12	ug/kg	1
2-Chloronaphthalene	91-58-7	8270D	ND		74	12	ug/kg	1
2-Chlorophenol	95-57-8	8270D	ND		74	10	ug/kg	1
4-Chlorophenyl phenyl ether	7005-72-3	8270D	ND		74	13	ug/kg	1
Chrysene	218-01-9	8270D	ND		74	12	ug/kg	1
Dibenzo(a,h)anthracene	53-70-3	8270D	ND		74	10	ug/kg	1
Dibenzofuran	132-64-9	8270D	ND		74	12	ug/kg	1
3,3'-Dichlorobenzidine	91-94-1	8270D	ND		360	40	ug/kg	1
2,4-Dichlorophenol	120-83-2	8270D	ND		74	11	ug/kg	1
Diethylphthalate	84-66-2	8270D	ND		74	24	ug/kg	1
Dimethyl phthalate	131-11-3	8270D	ND		74	24	ug/kg	1
2,4-Dimethylphenol	105-67-9	8270D	ND		74	14	ug/kg	1
Di-n-butyl phthalate	84-74-2	8270D	ND		74	24	ug/kg	1
4,6-Dinitro-2-methylphenol	534-52-1	8270D	ND		360	140	ug/kg	1
2,4-Dinitrophenol	51-28-5	8270D	ND		360	120	ug/kg	1
2,4-Dinitrotoluene	121-14-2	8270D	ND		140	20	ug/kg	1
2,6-Dinitrotoluene	606-20-2	8270D	ND		140	19	ug/kg	1
Di-n-octylphthalate	117-84-0	8270D	ND		74	35	ug/kg	1
bis(2-Ethylhexyl)phthalate	117-81-7	8270D	ND		74	24	ug/kg	1
Fluoranthene	206-44-0	8270D	ND		74	12	ug/kg	1
Fluorene	86-73-7	8270D	ND		74	9.9	ug/kg	1
Hexachlorobenzene	118-74-1	8270D	ND		74	16	ug/kg	1
Hexachlorobutadiene	87-68-3	8270D	ND		74	12	ug/kg	1
Hexachlorocyclopentadiene	77-47-4	8270D	ND		360	27	ug/kg	1

PQL = Practical quantitation limit
B = Detected in the method blank
E = Quantitation of compound exceeded the calibration range
ND = Not detected at or above the MDL
J = Estimated result < PQL and ≥ MDL
P = The RPD between two GC columns exceeds 40%
Where applicable, all soil sample analysis are reported on a dry weight basis unless flagged with a "W"
N = Recovery is out of criteria
H = Out of holding time

Semivolatile Organic Compounds by GC/MS

Client: **ARCADIS U.S., Inc.**
Laboratory ID: **LC17068-007**
Description: **F39SB006 (4-5)**
Matrix: **Solid**
Date Sampled: **03/15/2010 1725**
% Solids: **90.4** **03/17/2010 2329**
Date Received: **03/17/2010**

Run	Prep Method	Analytical Method	Dilution	Analysis Date	Analyst	Prep Date	Batch
1	3550C	8270D	1	03/22/2010 1907	WD	03/19/2010 1000	29722

Parameter	CAS Number	Analytical Method	Result	Q	PQL	MDL	Units	Run
Hexachloroethane	67-72-1	8270D	ND		74	9.8	ug/kg	1
Indeno(1,2,3-c,d)pyrene	193-39-5	8270D	ND		74	11	ug/kg	1
Isophorone	78-59-1	8270D	ND		74	8.1	ug/kg	1
2-Methylnaphthalene	91-57-6	8270D	ND		74	11	ug/kg	1
2-Methylphenol	95-48-7	8270D	ND		74	6.6	ug/kg	1
3 & 4-Methylphenol	106-44-5	8270D	ND		140	13	ug/kg	1
Naphthalene	91-20-3	8270D	ND		74	11	ug/kg	1
2-Nitroaniline	88-74-4	8270D	ND		140	25	ug/kg	1
3-Nitroaniline	99-09-2	8270D	ND		140	43	ug/kg	1
4-Nitroaniline	100-01-6	8270D	ND		140	21	ug/kg	1
Nitrobenzene	98-95-3	8270D	ND		74	5.9	ug/kg	1
2-Nitrophenol	88-75-5	8270D	ND		140	20	ug/kg	1
4-Nitrophenol	100-02-7	8270D	ND		360	110	ug/kg	1
N-Nitrosodi-n-propylamine	621-64-7	8270D	ND		74	14	ug/kg	1
N-Nitrosodiphenylamine (Diphenylamine)	86-30-6	8270D	ND		74	9.1	ug/kg	1
Pentachlorophenol	87-86-5	8270D	ND		360	150	ug/kg	1
Phenanthrene	85-01-8	8270D	ND		74	9.9	ug/kg	1
Phenol	108-95-2	8270D	ND		74	10	ug/kg	1
Pyrene	129-00-0	8270D	ND		74	15	ug/kg	1
2,4,5-Trichlorophenol	95-95-4	8270D	ND		74	10	ug/kg	1
2,4,6-Trichlorophenol	88-06-2	8270D	ND		74	11	ug/kg	1

Surrogate	Q	Run 1 % Recovery	Acceptance Limits
2-Fluorobiphenyl		88	33-102
2-Fluorophenol		81	28-104
Nitrobenzene-d5		78	22-109
Phenol-d5		84	27-103
Terphenyl-d14		77	41-120
2,4,6-Tribromophenol		97	30-117

PQL = Practical quantitation limit
B = Detected in the method blank
E = Quantitation of compound exceeded the calibration range
ND = Not detected at or above the MDL
J = Estimated result < PQL and ≥ MDL
P = The RPD between two GC columns exceeds 40%
Where applicable, all soil sample analysis are reported on a dry weight basis unless flagged with a "W"
N = Recovery is out of criteria
H = Out of holding time

RCRA Metals

Client: **ARCADIS U.S., Inc.**
Laboratory ID: **LC17068-007**
Description: **F39SB006 (4-5)**
Matrix: **Solid**
Date Sampled: **03/15/2010 1725**
% Solids: **90.4** **03/17/2010 2329**
Date Received: **03/17/2010**

Run	Prep Method	Analytical Method	Dilution	Analysis Date	Analyst	Prep Date	Batch
1		7471B	1	03/23/2010 0003	BNW	03/22/2010 2050	29905
1	3050B	6010C	1	03/23/2010 2336	CDF	03/22/2010 1730	29899

Parameter	CAS Number	Analytical Method	Result	Q	PQL	MDL	Units	Run
Arsenic	**7440-38-2**	**6010C**	**0.57**		**0.53**	**0.20**	**mg/kg**	**1**
Barium	**7440-39-3**	**6010C**	**6.5**		**1.4**	**0.096**	**mg/kg**	**1**
Cadmium	**7440-43-9**	**6010C**	**0.061**	**BJ**	**0.11**	**0.011**	**mg/kg**	**1**
Chromium	**7440-47-3**	**6010C**	**2.6**	**B**	**0.27**	**0.054**	**mg/kg**	**1**
Lead	**7439-92-1**	**6010C**	**3.1**		**0.53**	**0.098**	**mg/kg**	**1**
Mercury	**7439-97-6**	**7471B**	**0.015**	**J**	**0.091**	**0.0065**	**mg/kg**	**1**
Selenium	**7782-49-2**	**6010C**	**0.55**	**B**	**0.53**	**0.18**	**mg/kg**	**1**
Silver	7440-22-4	6010C	ND		0.27	0.045	mg/kg	1

PQL = Practical quantitation limit
B = Detected in the method blank
E = Quantitation of compound exceeded the calibration range
ND = Not detected at or above the MDL
J = Estimated result < PQL and ≥ MDL
P = The RPD between two GC columns exceeds 40%
Where applicable, all soil sample analysis are reported on a dry weight basis unless flagged with a "W"
N = Recovery is out of criteria
H = Out of holding time

Volatile Organic Compounds by GC/MS

Client: **ARCADIS U.S., Inc.**
Laboratory ID: **LC17068-008**
Description: **F39SB007 (4-5)**
Matrix: **Solid**
Date Sampled: **03/15/2010 1800**
% Solids: **89.1** **03/17/2010 2329**
Date Received: **03/17/2010**

Run	Prep Method	Analytical Method	Dilution	Analysis Date	Analyst	Prep Date	Batch	Sample Wt.(g)
1	5035	8260B	1	03/20/2010 2008	DLB		29863	5.99

Parameter	CAS Number	Analytical Method	Result	Q	PQL	MDL	Units	Run
Acetone	**67-64-1**	**8260B**	**62**		**19**	**6.3**	**ug/kg**	**1**
Benzene	71-43-2	8260B	ND		4.7	1.0	ug/kg	1
Bromodichloromethane	75-27-4	8260B	ND		4.7	1.6	ug/kg	1
Bromoform	75-25-2	8260B	ND		4.7	0.66	ug/kg	1
Bromomethane (Methyl bromide)	74-83-9	8260B	ND		4.7	1.7	ug/kg	1
2-Butanone (MEK)	78-93-3	8260B	ND		9.4	2.2	ug/kg	1
Carbon disulfide	75-15-0	8260B	ND		4.7	1.2	ug/kg	1
Carbon tetrachloride	56-23-5	8260B	ND		4.7	1.7	ug/kg	1
Chlorobenzene	108-90-7	8260B	ND		4.7	1.6	ug/kg	1
Chloroethane	75-00-3	8260B	ND		4.7	1.2	ug/kg	1
Chloroform	67-66-3	8260B	ND		4.7	0.78	ug/kg	1
Chloromethane (Methyl chloride)	74-87-3	8260B	ND		4.7	0.94	ug/kg	1
Cyclohexane	110-82-7	8260B	ND		4.7	0.63	ug/kg	1
1,2-Dibromo-3-chloropropane (DBCP)	96-12-8	8260B	ND		4.7	1.4	ug/kg	1
Dibromochloromethane	124-48-1	8260B	ND		4.7	1.6	ug/kg	1
1,2-Dibromoethane (EDB)	106-93-4	8260B	ND		4.7	0.80	ug/kg	1
1,2-Dichlorobenzene	95-50-1	8260B	ND		4.7	1.6	ug/kg	1
1,3-Dichlorobenzene	541-73-1	8260B	ND		4.7	1.6	ug/kg	1
1,4-Dichlorobenzene	106-46-7	8260B	ND		4.7	1.6	ug/kg	1
Dichlorodifluoromethane	75-71-8	8260B	ND		4.7	1.5	ug/kg	1
1,1-Dichloroethane	75-34-3	8260B	ND		4.7	0.68	ug/kg	1
1,2-Dichloroethane	107-06-2	8260B	ND		4.7	0.94	ug/kg	1
1,1-Dichloroethene	75-35-4	8260B	ND		4.7	1.6	ug/kg	1
cis-1,2-Dichloroethene	156-59-2	8260B	ND		4.7	0.71	ug/kg	1
trans-1,2-Dichloroethene	156-60-5	8260B	ND		4.7	1.4	ug/kg	1
1,2-Dichloropropane	78-87-5	8260B	ND		4.7	0.85	ug/kg	1
cis-1,3-Dichloropropene	10061-01-5	8260B	ND		4.7	0.64	ug/kg	1
trans-1,3-Dichloropropene	10061-02-6	8260B	ND		4.7	0.77	ug/kg	1
Ethylbenzene	100-41-4	8260B	ND		4.7	1.6	ug/kg	1
2-Hexanone	591-78-6	8260B	ND		9.4	1.2	ug/kg	1
Isopropylbenzene	98-82-8	8260B	ND		4.7	0.75	ug/kg	1
Methyl acetate	79-20-9	8260B	ND		4.7	0.63	ug/kg	1
Methyl tertiary butyl ether (MTBE)	1634-04-4	8260B	ND		4.7	0.37	ug/kg	1
4-Methyl-2-pentanone	108-10-1	8260B	ND		9.4	1.4	ug/kg	1
Methylcyclohexane	**108-87-2**	**8260B**	**1.0**	**J**	**4.7**	**0.57**	**ug/kg**	**1**
Methylene chloride	75-09-2	8260B	ND		4.7	2.4	ug/kg	1
Styrene	100-42-5	8260B	ND		4.7	1.0	ug/kg	1
1,1,2,2-Tetrachloroethane	79-34-5	8260B	ND		4.7	0.44	ug/kg	1
Tetrachloroethene	127-18-4	8260B	ND		4.7	2.2	ug/kg	1
Toluene	108-88-3	8260B	ND		4.7	1.6	ug/kg	1
1,1,2-Trichloro-1,2,2-Trifluoroethane	76-13-1	8260B	ND		4.7	2.0	ug/kg	1
1,2,4-Trichlorobenzene	120-82-1	8260B	ND		4.7	1.6	ug/kg	1
1,1,1-Trichloroethane	71-55-6	8260B	ND		4.7	0.80	ug/kg	1
1,1,2-Trichloroethane	79-00-5	8260B	ND		4.7	0.74	ug/kg	1

PQL = Practical quantitation limit
B = Detected in the method blank
E = Quantitation of compound exceeded the calibration range
ND = Not detected at or above the MDL
J = Estimated result < PQL and ≥ MDL
P = The RPD between two GC columns exceeds 40%
Where applicable, all soil sample analysis are reported on a dry weight basis unless flagged with a "W"
N = Recovery is out of criteria
H = Out of holding time

Volatile Organic Compounds by GC/MS

Client: **ARCADIS U.S., Inc.**	Laboratory ID: **LC17068-008**
Description: **F39SB007 (4-5)**	Matrix: **Solid**
Date Sampled: **03/15/2010 1800**	% Solids: **89.1** **03/17/2010 2329**
Date Received: **03/17/2010**	

Run	Prep Method	Analytical Method	Dilution	Analysis Date	Analyst	Prep Date	Batch	Sample Wt.(g)
1	5035	8260B	1	03/20/2010 2008	DLB		29863	5.99

Parameter	CAS Number	Analytical Method	Result	Q	PQL	MDL	Units	Run
Trichloroethene	79-01-6	8260B	ND		4.7	1.8	ug/kg	1
Trichlorofluoromethane	75-69-4	8260B	ND		4.7	1.4	ug/kg	1
Vinyl chloride	75-01-4	8260B	ND		4.7	0.81	ug/kg	1
Xylenes (total)	1330-20-7	8260B	ND		4.7	2.7	ug/kg	1

Surrogate	Q	Run 1 % Recovery	Acceptance Limits
1,2-Dichloroethane-d4		97	53-142
Bromofluorobenzene		92	47-138
Toluene-d8		102	68-124

PQL = Practical quantitation limit
ND = Not detected at or above the MDL
Where applicable, all soil sample analysis are reported on a dry weight basis unless flagged with a "W"
B = Detected in the method blank
J = Estimated result < PQL and ≥ MDL
E = Quantitation of compound exceeded the calibration range
P = The RPD between two GC columns exceeds 40%
N = Recovery is out of criteria
H = Out of holding time

Semivolatile Organic Compounds by GC/MS

Client: **ARCADIS U.S., Inc.**
Laboratory ID: **LC17068-008**
Description: **F39SB007 (4-5)**
Matrix: **Solid**
Date Sampled: **03/15/2010 1800**
% Solids: **89.1** **03/17/2010 2329**
Date Received: **03/17/2010**

Run	Prep Method	Analytical Method	Dilution	Analysis Date	Analyst	Prep Date	Batch
1	3550C	8270D	1	03/22/2010 1926	WD	03/19/2010 1000	29722

Parameter	CAS Number	Analytical Method	Result	Q	PQL	MDL	Units	Run
Acenaphthene	83-32-9	8270D	ND		74	12	ug/kg	1
Acenaphthylene	**208-96-8**	**8270D**	**52**	**J**	**74**	**11**	**ug/kg**	**1**
Acetophenone	98-86-2	8270D	ND		74	20	ug/kg	1
Anthracene	**120-12-7**	**8270D**	**35**	**J**	**74**	**8.1**	**ug/kg**	**1**
Atrazine	1912-24-9	8270D	ND		74	19	ug/kg	1
Benzaldehyde	100-52-7	8270D	ND		74	19	ug/kg	1
Benzo(a)anthracene	**56-55-3**	**8270D**	**59**	**J**	**74**	**9.7**	**ug/kg**	**1**
Benzo(a)pyrene	**50-32-8**	**8270D**	**74**		**74**	**10**	**ug/kg**	**1**
Benzo(b)fluoranthene	**205-99-2**	**8270D**	**97**		**74**	**11**	**ug/kg**	**1**
Benzo(g,h,i)perylene	**191-24-2**	**8270D**	**62**	**J**	**74**	**13**	**ug/kg**	**1**
Benzo(k)fluoranthene	**207-08-9**	**8270D**	**32**	**J**	**74**	**10**	**ug/kg**	**1**
1,1'-Biphenyl	92-52-4	8270D	ND		74	11	ug/kg	1
4-Bromophenyl phenyl ether	101-55-3	8270D	ND		74	11	ug/kg	1
Butyl benzyl phthalate	85-68-7	8270D	ND		140	49	ug/kg	1
Caprolactam	105-60-2	8270D	ND		74	19	ug/kg	1
Carbazole	86-74-8	8270D	ND		74	16	ug/kg	1
4-Chloro-3-methyl phenol	59-50-7	8270D	ND		74	9.3	ug/kg	1
4-Chloroaniline	106-47-8	8270D	ND		74	7.5	ug/kg	1
bis(2-Chloroethoxy)methane	111-91-1	8270D	ND		74	11	ug/kg	1
bis(2-Chloroethyl)ether	111-44-4	8270D	ND		74	10	ug/kg	1
bis(2-Chloroisopropyl)ether	108-60-1	8270D	ND		74	12	ug/kg	1
2-Chloronaphthalene	91-58-7	8270D	ND		74	12	ug/kg	1
2-Chlorophenol	95-57-8	8270D	ND		74	10	ug/kg	1
4-Chlorophenyl phenyl ether	7005-72-3	8270D	ND		74	13	ug/kg	1
Chrysene	**218-01-9**	**8270D**	**89**		**74**	**12**	**ug/kg**	**1**
Dibenzo(a,h)anthracene	53-70-3	8270D	ND		74	10	ug/kg	1
Dibenzofuran	132-64-9	8270D	ND		74	12	ug/kg	1
3,3'-Dichlorobenzidine	91-94-1	8270D	ND		360	40	ug/kg	1
2,4-Dichlorophenol	120-83-2	8270D	ND		74	11	ug/kg	1
Diethylphthalate	84-66-2	8270D	ND		74	24	ug/kg	1
Dimethyl phthalate	131-11-3	8270D	ND		74	24	ug/kg	1
2,4-Dimethylphenol	105-67-9	8270D	ND		74	14	ug/kg	1
Di-n-butyl phthalate	84-74-2	8270D	ND		74	24	ug/kg	1
4,6-Dinitro-2-methylphenol	534-52-1	8270D	ND		360	140	ug/kg	1
2,4-Dinitrophenol	51-28-5	8270D	ND		360	120	ug/kg	1
2,4-Dinitrotoluene	121-14-2	8270D	ND		140	20	ug/kg	1
2,6-Dinitrotoluene	606-20-2	8270D	ND		140	19	ug/kg	1
Di-n-octylphthalate	117-84-0	8270D	ND		74	35	ug/kg	1
bis(2-Ethylhexyl)phthalate	117-81-7	8270D	ND		74	24	ug/kg	1
Fluoranthene	**206-44-0**	**8270D**	**89**		**74**	**12**	**ug/kg**	**1**
Fluorene	86-73-7	8270D	ND		74	9.9	ug/kg	1
Hexachlorobenzene	118-74-1	8270D	ND		74	16	ug/kg	1
Hexachlorobutadiene	87-68-3	8270D	ND		74	12	ug/kg	1
Hexachlorocyclopentadiene	77-47-4	8270D	ND		360	27	ug/kg	1

PQL = Practical quantitation limit
B = Detected in the method blank
E = Quantitation of compound exceeded the calibration range
ND = Not detected at or above the MDL
J = Estimated result < PQL and ≥ MDL
P = The RPD between two GC columns exceeds 40%
Where applicable, all soil sample analysis are reported on a dry weight basis unless flagged with a "W"
N = Recovery is out of criteria
H = Out of holding time

Semivolatile Organic Compounds by GC/MS

Client: **ARCADIS U.S., Inc.**
Laboratory ID: **LC17068-008**
Description: **F39SB007 (4-5)**
Matrix: **Solid**
Date Sampled: **03/15/2010 1800**
% Solids: **89.1** **03/17/2010 2329**
Date Received: **03/17/2010**

Run	Prep Method	Analytical Method	Dilution	Analysis Date	Analyst	Prep Date	Batch
1	3550C	8270D	1	03/22/2010 1926	WD	03/19/2010 1000	29722

Parameter	CAS Number	Analytical Method	Result	Q	PQL	MDL	Units	Run
Hexachloroethane	67-72-1	8270D	ND		74	9.8	ug/kg	1
Indeno(1,2,3-c,d)pyrene	**193-39-5**	**8270D**	**42**	**J**	**74**	**11**	**ug/kg**	**1**
Isophorone	78-59-1	8270D	ND		74	8.1	ug/kg	1
2-Methylnaphthalene	**91-57-6**	**8270D**	**55**	**J**	**74**	**11**	**ug/kg**	**1**
2-Methylphenol	95-48-7	8270D	ND		74	6.7	ug/kg	1
3 & 4-Methylphenol	106-44-5	8270D	ND		140	13	ug/kg	1
Naphthalene	91-20-3	8270D	ND		74	11	ug/kg	1
2-Nitroaniline	88-74-4	8270D	ND		140	25	ug/kg	1
3-Nitroaniline	99-09-2	8270D	ND		140	43	ug/kg	1
4-Nitroaniline	100-01-6	8270D	ND		140	21	ug/kg	1
Nitrobenzene	98-95-3	8270D	ND		74	5.9	ug/kg	1
2-Nitrophenol	88-75-5	8270D	ND		140	20	ug/kg	1
4-Nitrophenol	100-02-7	8270D	ND		360	110	ug/kg	1
N-Nitrosodi-n-propylamine	621-64-7	8270D	ND		74	14	ug/kg	1
N-Nitrosodiphenylamine (Diphenylamine)	86-30-6	8270D	ND		74	9.1	ug/kg	1
Pentachlorophenol	87-86-5	8270D	ND		360	150	ug/kg	1
Phenanthrene	**85-01-8**	**8270D**	**67**	**J**	**74**	**9.9**	**ug/kg**	**1**
Phenol	108-95-2	8270D	ND		74	10	ug/kg	1
Pyrene	**129-00-0**	**8270D**	**120**		**74**	**15**	**ug/kg**	**1**
2,4,5-Trichlorophenol	95-95-4	8270D	ND		74	10	ug/kg	1
2,4,6-Trichlorophenol	88-06-2	8270D	ND		74	11	ug/kg	1

Surrogate	Q	Run 1 % Recovery	Acceptance Limits
2-Fluorobiphenyl		80	33-102
2-Fluorophenol		78	28-104
Nitrobenzene-d5		74	22-109
Phenol-d5		81	27-103
Terphenyl-d14		80	41-120
2,4,6-Tribromophenol		91	30-117

PQL = Practical quantitation limit
B = Detected in the method blank
E = Quantitation of compound exceeded the calibration range
ND = Not detected at or above the MDL
J = Estimated result < PQL and ≥ MDL
P = The RPD between two GC columns exceeds 40%
Where applicable, all soil sample analysis are reported on a dry weight basis unless flagged with a "W"
N = Recovery is out of criteria
H = Out of holding time

RCRA Metals

Client: **ARCADIS U.S., Inc.**
Laboratory ID: **LC17068-008**
Description: **F39SB007 (4-5)**
Matrix: **Solid**
Date Sampled: **03/15/2010 1800**
% Solids: **89.1** **03/17/2010 2329**
Date Received: **03/17/2010**

Run	Prep Method	Analytical Method	Dilution	Analysis Date	Analyst	Prep Date	Batch
1		7471B	1	03/23/2010 0005	BNW	03/22/2010 2050	29905
1	3050B	6010C	1	03/23/2010 2340	CDF	03/22/2010 1730	29899

Parameter	CAS Number	Analytical Method	Result	Q	PQL	MDL	Units	Run
Arsenic	**7440-38-2**	**6010C**	**0.49**	**J**	**0.52**	**0.20**	**mg/kg**	**1**
Barium	**7440-39-3**	**6010C**	**12**		**1.4**	**0.094**	**mg/kg**	**1**
Cadmium	**7440-43-9**	**6010C**	**0.10**	**B**	**0.10**	**0.011**	**mg/kg**	**1**
Chromium	**7440-47-3**	**6010C**	**3.4**	**B**	**0.26**	**0.053**	**mg/kg**	**1**
Lead	**7439-92-1**	**6010C**	**10**		**0.52**	**0.097**	**mg/kg**	**1**
Mercury	**7439-97-6**	**7471B**	**0.026**	**J**	**0.092**	**0.0066**	**mg/kg**	**1**
Selenium	**7782-49-2**	**6010C**	**0.49**	**BJ**	**0.52**	**0.18**	**mg/kg**	**1**
Silver	7440-22-4	6010C	ND		0.26	0.044	mg/kg	1

PQL = Practical quantitation limit
B = Detected in the method blank
E = Quantitation of compound exceeded the calibration range
ND = Not detected at or above the MDL
J = Estimated result < PQL and ≥ MDL
P = The RPD between two GC columns exceeds 40%
Where applicable, all soil sample analysis are reported on a dry weight basis unless flagged with a "W"
N = Recovery is out of criteria
H = Out of holding time

Volatile Organic Compounds by GC/MS

Client: **ARCADIS U.S., Inc.**
Laboratory ID: **LC17068-009**
Description: **F39SB010 (0.5-1.0)**
Matrix: **Solid**
Date Sampled: **03/16/2010 0840**
% Solids: **87.5** **03/17/2010 2329**
Date Received: **03/17/2010**

Run	Prep Method	Analytical Method	Dilution	Analysis Date	Analyst	Prep Date	Batch	Sample Wt.(g)
1	5035	8260B	1	03/20/2010 2031	DLB		29863	5.87

Parameter	CAS Number	Analytical Method	Result	Q	PQL	MDL	Units	Run
Acetone	**67-64-1**	**8260B**	**17**	**J**	**19**	**6.5**	**ug/kg**	**1**
Benzene	71-43-2	8260B	ND		4.9	1.1	ug/kg	1
Bromodichloromethane	75-27-4	8260B	ND		4.9	1.7	ug/kg	1
Bromoform	75-25-2	8260B	ND		4.9	0.68	ug/kg	1
Bromomethane (Methyl bromide)	74-83-9	8260B	ND		4.9	1.8	ug/kg	1
2-Butanone (MEK)	78-93-3	8260B	ND		9.7	2.3	ug/kg	1
Carbon disulfide	75-15-0	8260B	ND		4.9	1.3	ug/kg	1
Carbon tetrachloride	56-23-5	8260B	ND		4.9	1.8	ug/kg	1
Chlorobenzene	108-90-7	8260B	ND		4.9	1.7	ug/kg	1
Chloroethane	75-00-3	8260B	ND		4.9	1.3	ug/kg	1
Chloroform	67-66-3	8260B	ND		4.9	0.81	ug/kg	1
Chloromethane (Methyl chloride)	74-87-3	8260B	ND		4.9	0.97	ug/kg	1
Cyclohexane	110-82-7	8260B	ND		4.9	0.66	ug/kg	1
1,2-Dibromo-3-chloropropane (DBCP)	96-12-8	8260B	ND		4.9	1.5	ug/kg	1
Dibromochloromethane	124-48-1	8260B	ND		4.9	1.7	ug/kg	1
1,2-Dibromoethane (EDB)	106-93-4	8260B	ND		4.9	0.83	ug/kg	1
1,2-Dichlorobenzene	95-50-1	8260B	ND		4.9	1.7	ug/kg	1
1,3-Dichlorobenzene	541-73-1	8260B	ND		4.9	1.7	ug/kg	1
1,4-Dichlorobenzene	106-46-7	8260B	ND		4.9	1.7	ug/kg	1
Dichlorodifluoromethane	75-71-8	8260B	ND		4.9	1.6	ug/kg	1
1,1-Dichloroethane	75-34-3	8260B	ND		4.9	0.71	ug/kg	1
1,2-Dichloroethane	107-06-2	8260B	ND		4.9	0.97	ug/kg	1
1,1-Dichloroethene	75-35-4	8260B	ND		4.9	1.7	ug/kg	1
cis-1,2-Dichloroethene	156-59-2	8260B	ND		4.9	0.74	ug/kg	1
trans-1,2-Dichloroethene	156-60-5	8260B	ND		4.9	1.5	ug/kg	1
1,2-Dichloropropane	78-87-5	8260B	ND		4.9	0.89	ug/kg	1
cis-1,3-Dichloropropene	10061-01-5	8260B	ND		4.9	0.66	ug/kg	1
trans-1,3-Dichloropropene	10061-02-6	8260B	ND		4.9	0.80	ug/kg	1
Ethylbenzene	100-41-4	8260B	ND		4.9	1.7	ug/kg	1
2-Hexanone	591-78-6	8260B	ND		9.7	1.3	ug/kg	1
Isopropylbenzene	98-82-8	8260B	ND		4.9	0.78	ug/kg	1
Methyl acetate	79-20-9	8260B	ND		4.9	0.65	ug/kg	1
Methyl tertiary butyl ether (MTBE)	1634-04-4	8260B	ND		4.9	0.39	ug/kg	1
4-Methyl-2-pentanone	108-10-1	8260B	ND		9.7	1.5	ug/kg	1
Methylcyclohexane	108-87-2	8260B	ND		4.9	0.59	ug/kg	1
Methylene chloride	75-09-2	8260B	ND		4.9	2.5	ug/kg	1
Styrene	100-42-5	8260B	ND		4.9	1.1	ug/kg	1
1,1,2,2-Tetrachloroethane	79-34-5	8260B	ND		4.9	0.46	ug/kg	1
Tetrachloroethene	127-18-4	8260B	ND		4.9	2.2	ug/kg	1
Toluene	108-88-3	8260B	ND		4.9	1.7	ug/kg	1
1,1,2-Trichloro-1,2,2-Trifluoroethane	76-13-1	8260B	ND		4.9	2.0	ug/kg	1
1,2,4-Trichlorobenzene	120-82-1	8260B	ND		4.9	1.7	ug/kg	1
1,1,1-Trichloroethane	71-55-6	8260B	ND		4.9	0.83	ug/kg	1
1,1,2-Trichloroethane	79-00-5	8260B	ND		4.9	0.77	ug/kg	1

PQL = Practical quantitation limit
B = Detected in the method blank
E = Quantitation of compound exceeded the calibration range
ND = Not detected at or above the MDL
J = Estimated result < PQL and ≥ MDL
P = The RPD between two GC columns exceeds 40%
Where applicable, all soil sample analysis are reported on a dry weight basis unless flagged with a "W"
N = Recovery is out of criteria
H = Out of holding time

Volatile Organic Compounds by GC/MS

Client: **ARCADIS U.S., Inc.**	Laboratory ID: **LC17068-009**
Description: **F39SB010 (0.5-1.0)**	Matrix: **Solid**
Date Sampled: **03/16/2010 0840**	% Solids: **87.5** **03/17/2010 2329**
Date Received: **03/17/2010**	

Run	Prep Method	Analytical Method	Dilution	Analysis Date	Analyst	Prep Date	Batch	Sample Wt.(g)
1	5035	8260B	1	03/20/2010 2031	DLB		29863	5.87

Parameter	CAS Number	Analytical Method	Result	Q	PQL	MDL	Units	Run
Trichloroethene	79-01-6	8260B	ND		4.9	1.8	ug/kg	1
Trichlorofluoromethane	75-69-4	8260B	ND		4.9	1.5	ug/kg	1
Vinyl chloride	75-01-4	8260B	ND		4.9	0.84	ug/kg	1
Xylenes (total)	1330-20-7	8260B	ND		4.9	2.8	ug/kg	1

Surrogate	Q	Run 1 % Recovery	Acceptance Limits
1,2-Dichloroethane-d4		89	53-142
Bromofluorobenzene		90	47-138
Toluene-d8		92	68-124

PQL = Practical quantitation limit
ND = Not detected at or above the MDL
Where applicable, all soil sample analysis are reported on a dry weight basis unless flagged with a "W"
B = Detected in the method blank
J = Estimated result < PQL and ≥ MDL
E = Quantitation of compound exceeded the calibration range
P = The RPD between two GC columns exceeds 40%
N = Recovery is out of criteria
H = Out of holding time

Semivolatile Organic Compounds by GC/MS

Client: **ARCADIS U.S., Inc.**
Laboratory ID: **LC17068-009**
Description: **F39SB010 (0.5-1.0)**
Matrix: **Solid**
Date Sampled: **03/16/2010 0840**
% Solids: **87.5** **03/17/2010 2329**
Date Received: **03/17/2010**

Run	Prep Method	Analytical Method	Dilution	Analysis Date	Analyst	Prep Date	Batch
1	3550C	8270D	1	03/22/2010 1945	WD	03/19/2010 1000	29722

Parameter	CAS Number	Analytical Method	Result	Q	PQL	MDL	Units	Run
Acenaphthene	83-32-9	8270D	ND		76	12	ug/kg	1
Acenaphthylene	**208-96-8**	**8270D**	**400**		**76**	**12**	**ug/kg**	**1**
Acetophenone	98-86-2	8270D	ND		76	20	ug/kg	1
Anthracene	**120-12-7**	**8270D**	**250**		**76**	**8.3**	**ug/kg**	**1**
Atrazine	1912-24-9	8270D	ND		76	19	ug/kg	1
Benzaldehyde	100-52-7	8270D	ND		76	19	ug/kg	1
Benzo(a)anthracene	**56-55-3**	**8270D**	**500**		**76**	**9.9**	**ug/kg**	**1**
Benzo(a)pyrene	**50-32-8**	**8270D**	**820**		**76**	**11**	**ug/kg**	**1**
Benzo(b)fluoranthene	**205-99-2**	**8270D**	**1100**		**76**	**11**	**ug/kg**	**1**
Benzo(g,h,i)perylene	**191-24-2**	**8270D**	**480**		**76**	**13**	**ug/kg**	**1**
Benzo(k)fluoranthene	**207-08-9**	**8270D**	**380**		**76**	**11**	**ug/kg**	**1**
1,1'-Biphenyl	92-52-4	8270D	ND		76	11	ug/kg	1
4-Bromophenyl phenyl ether	101-55-3	8270D	ND		76	11	ug/kg	1
Butyl benzyl phthalate	85-68-7	8270D	ND		150	50	ug/kg	1
Caprolactam	105-60-2	8270D	ND		76	19	ug/kg	1
Carbazole	86-74-8	8270D	ND		76	16	ug/kg	1
4-Chloro-3-methyl phenol	59-50-7	8270D	ND		76	9.5	ug/kg	1
4-Chloroaniline	106-47-8	8270D	ND		76	7.6	ug/kg	1
bis(2-Chloroethoxy)methane	111-91-1	8270D	ND		76	11	ug/kg	1
bis(2-Chloroethyl)ether	111-44-4	8270D	ND		76	10	ug/kg	1
bis(2-Chloroisopropyl)ether	108-60-1	8270D	ND		76	12	ug/kg	1
2-Chloronaphthalene	91-58-7	8270D	ND		76	12	ug/kg	1
2-Chlorophenol	95-57-8	8270D	ND		76	10	ug/kg	1
4-Chlorophenyl phenyl ether	7005-72-3	8270D	ND		76	13	ug/kg	1
Chrysene	**218-01-9**	**8270D**	**570**		**76**	**12**	**ug/kg**	**1**
Dibenzo(a,h)anthracene	53-70-3	8270D	ND		76	10	ug/kg	1
Dibenzofuran	132-64-9	8270D	ND		76	12	ug/kg	1
3,3'-Dichlorobenzidine	91-94-1	8270D	ND		370	41	ug/kg	1
2,4-Dichlorophenol	120-83-2	8270D	ND		76	12	ug/kg	1
Diethylphthalate	84-66-2	8270D	ND		76	25	ug/kg	1
Dimethyl phthalate	131-11-3	8270D	ND		76	25	ug/kg	1
2,4-Dimethylphenol	105-67-9	8270D	ND		76	14	ug/kg	1
Di-n-butyl phthalate	84-74-2	8270D	ND		76	25	ug/kg	1
4,6-Dinitro-2-methylphenol	534-52-1	8270D	ND		370	150	ug/kg	1
2,4-Dinitrophenol	51-28-5	8270D	ND		370	130	ug/kg	1
2,4-Dinitrotoluene	121-14-2	8270D	ND		150	21	ug/kg	1
2,6-Dinitrotoluene	606-20-2	8270D	ND		150	19	ug/kg	1
Di-n-octylphthalate	**117-84-0**	**8270D**	**39**	**J**	**76**	**36**	**ug/kg**	**1**
bis(2-Ethylhexyl)phthalate	117-81-7	8270D	ND		76	25	ug/kg	1
Fluoranthene	**206-44-0**	**8270D**	**280**		**76**	**12**	**ug/kg**	**1**
Fluorene	86-73-7	8270D	ND		76	10	ug/kg	1
Hexachlorobenzene	118-74-1	8270D	ND		76	17	ug/kg	1
Hexachlorobutadiene	87-68-3	8270D	ND		76	12	ug/kg	1
Hexachlorocyclopentadiene	77-47-4	8270D	ND		370	28	ug/kg	1

PQL = Practical quantitation limit
B = Detected in the method blank
E = Quantitation of compound exceeded the calibration range
ND = Not detected at or above the MDL
J = Estimated result < PQL and ≥ MDL
P = The RPD between two GC columns exceeds 40%
Where applicable, all soil sample analysis are reported on a dry weight basis unless flagged with a "W"
N = Recovery is out of criteria
H = Out of holding time

Semivolatile Organic Compounds by GC/MS

Client: **ARCADIS U.S., Inc.**
Laboratory ID: **LC17068-009**
Description: **F39SB010 (0.5-1.0)**
Matrix: **Solid**
Date Sampled: **03/16/2010 0840**
% Solids: **87.5** **03/17/2010 2329**
Date Received: **03/17/2010**

Run	Prep Method	Analytical Method	Dilution	Analysis Date	Analyst	Prep Date	Batch
1	3550C	8270D	1	03/22/2010 1945	WD	03/19/2010 1000	29722

Parameter	CAS Number	Analytical Method	Result	Q	PQL	MDL	Units	Run
Hexachloroethane	67-72-1	8270D	ND		76	10	ug/kg	1
Indeno(1,2,3-c,d)pyrene	**193-39-5**	**8270D**	**420**		**76**	**11**	**ug/kg**	**1**
Isophorone	78-59-1	8270D	ND		76	8.3	ug/kg	1
2-Methylnaphthalene	91-57-6	8270D	ND		76	11	ug/kg	1
2-Methylphenol	95-48-7	8270D	ND		76	6.8	ug/kg	1
3 & 4-Methylphenol	106-44-5	8270D	ND		150	13	ug/kg	1
Naphthalene	91-20-3	8270D	ND		76	11	ug/kg	1
2-Nitroaniline	88-74-4	8270D	ND		150	26	ug/kg	1
3-Nitroaniline	99-09-2	8270D	ND		150	44	ug/kg	1
4-Nitroaniline	100-01-6	8270D	ND		150	21	ug/kg	1
Nitrobenzene	98-95-3	8270D	ND		76	6.1	ug/kg	1
2-Nitrophenol	88-75-5	8270D	ND		150	21	ug/kg	1
4-Nitrophenol	100-02-7	8270D	ND		370	110	ug/kg	1
N-Nitrosodi-n-propylamine	621-64-7	8270D	ND		76	14	ug/kg	1
N-Nitrosodiphenylamine (Diphenylamine)	86-30-6	8270D	ND		76	9.3	ug/kg	1
Pentachlorophenol	87-86-5	8270D	ND		370	160	ug/kg	1
Phenanthrene	**85-01-8**	**8270D**	**23**	**J**	**76**	**10**	**ug/kg**	**1**
Phenol	108-95-2	8270D	ND		76	10	ug/kg	1
Pyrene	**129-00-0**	**8270D**	**640**		**76**	**15**	**ug/kg**	**1**
2,4,5-Trichlorophenol	95-95-4	8270D	ND		76	11	ug/kg	1
2,4,6-Trichlorophenol	88-06-2	8270D	ND		76	11	ug/kg	1

Surrogate	Q	Run 1 % Recovery	Acceptance Limits
2-Fluorobiphenyl		72	33-102
2-Fluorophenol		62	28-104
Nitrobenzene-d5		58	22-109
Phenol-d5		69	27-103
Terphenyl-d14		74	41-120
2,4,6-Tribromophenol		84	30-117

PQL = Practical quantitation limit
B = Detected in the method blank
E = Quantitation of compound exceeded the calibration range
ND = Not detected at or above the MDL
J = Estimated result < PQL and ≥ MDL
P = The RPD between two GC columns exceeds 40%
Where applicable, all soil sample analysis are reported on a dry weight basis unless flagged with a "W"
N = Recovery is out of criteria
H = Out of holding time

RCRA Metals

Client: **ARCADIS U.S., Inc.**
Laboratory ID: **LC17068-009**
Description: **F39SB010 (0.5-1.0)**
Matrix: **Solid**
Date Sampled: **03/16/2010 0840**
% Solids: **87.5** **03/17/2010 2329**
Date Received: **03/17/2010**

Run	Prep Method	Analytical Method	Dilution	Analysis Date	Analyst	Prep Date	Batch
1		7471B	1	03/23/2010 0007	BNW	03/22/2010 2050	29905
1	3050B	6010C	1	03/23/2010 2345	CDF	03/22/2010 1730	29899

Parameter	CAS Number	Analytical Method	Result	Q	PQL	MDL	Units	Run
Arsenic	7440-38-2	6010C	ND		0.56	0.21	mg/kg	1
Barium	**7440-39-3**	**6010C**	**5.0**		**1.5**	**0.10**	**mg/kg**	**1**
Cadmium	**7440-43-9**	**6010C**	**0.054**	**BJ**	**0.11**	**0.012**	**mg/kg**	**1**
Chromium	**7440-47-3**	**6010C**	**3.4**	**B**	**0.28**	**0.057**	**mg/kg**	**1**
Lead	**7439-92-1**	**6010C**	**3.4**		**0.56**	**0.10**	**mg/kg**	**1**
Mercury	**7439-97-6**	**7471B**	**0.030**	**J**	**0.093**	**0.0066**	**mg/kg**	**1**
Selenium	**7782-49-2**	**6010C**	**0.38**	**BJ**	**0.56**	**0.20**	**mg/kg**	**1**
Silver	7440-22-4	6010C	ND		0.28	0.047	mg/kg	1

PQL = Practical quantitation limit
B = Detected in the method blank
E = Quantitation of compound exceeded the calibration range
ND = Not detected at or above the MDL
J = Estimated result < PQL and ≥ MDL
P = The RPD between two GC columns exceeds 40%
Where applicable, all soil sample analysis are reported on a dry weight basis unless flagged with a "W"
N = Recovery is out of criteria
H = Out of holding time

Volatile Organic Compounds by GC/MS

Client: **ARCADIS U.S., Inc.**
Laboratory ID: **LC17068-010**
Description: **F39SB010 (3.0-3.5)**
Matrix: **Solid**
Date Sampled: **03/16/2010 0850**
% Solids: **90.1** **03/17/2010 2329**
Date Received: **03/17/2010**

Run	Prep Method	Analytical Method	Dilution	Analysis Date	Analyst	Prep Date	Batch	Sample Wt.(g)
1	5035	8260B	1	03/20/2010 2056	DLB		29863	5.93

Parameter	CAS Number	Analytical Method	Result	Q	PQL	MDL	Units	Run
Acetone	**67-64-1**	**8260B**	**16**	**J**	**19**	**6.3**	**ug/kg**	**1**
Benzene	71-43-2	8260B	ND		4.7	1.0	ug/kg	1
Bromodichloromethane	75-27-4	8260B	ND		4.7	1.6	ug/kg	1
Bromoform	75-25-2	8260B	ND		4.7	0.65	ug/kg	1
Bromomethane (Methyl bromide)	74-83-9	8260B	ND		4.7	1.7	ug/kg	1
2-Butanone (MEK)	78-93-3	8260B	ND		9.4	2.2	ug/kg	1
Carbon disulfide	75-15-0	8260B	ND		4.7	1.2	ug/kg	1
Carbon tetrachloride	56-23-5	8260B	ND		4.7	1.7	ug/kg	1
Chlorobenzene	108-90-7	8260B	ND		4.7	1.6	ug/kg	1
Chloroethane	75-00-3	8260B	ND		4.7	1.2	ug/kg	1
Chloroform	67-66-3	8260B	ND		4.7	0.78	ug/kg	1
Chloromethane (Methyl chloride)	74-87-3	8260B	ND		4.7	0.94	ug/kg	1
Cyclohexane	110-82-7	8260B	ND		4.7	0.63	ug/kg	1
1,2-Dibromo-3-chloropropane (DBCP)	96-12-8	8260B	ND		4.7	1.4	ug/kg	1
Dibromochloromethane	124-48-1	8260B	ND		4.7	1.6	ug/kg	1
1,2-Dibromoethane (EDB)	106-93-4	8260B	ND		4.7	0.80	ug/kg	1
1,2-Dichlorobenzene	95-50-1	8260B	ND		4.7	1.6	ug/kg	1
1,3-Dichlorobenzene	541-73-1	8260B	ND		4.7	1.6	ug/kg	1
1,4-Dichlorobenzene	106-46-7	8260B	ND		4.7	1.6	ug/kg	1
Dichlorodifluoromethane	75-71-8	8260B	ND		4.7	1.5	ug/kg	1
1,1-Dichloroethane	75-34-3	8260B	ND		4.7	0.68	ug/kg	1
1,2-Dichloroethane	107-06-2	8260B	ND		4.7	0.94	ug/kg	1
1,1-Dichloroethene	75-35-4	8260B	ND		4.7	1.6	ug/kg	1
cis-1,2-Dichloroethene	156-59-2	8260B	ND		4.7	0.71	ug/kg	1
trans-1,2-Dichloroethene	156-60-5	8260B	ND		4.7	1.4	ug/kg	1
1,2-Dichloropropane	78-87-5	8260B	ND		4.7	0.85	ug/kg	1
cis-1,3-Dichloropropene	10061-01-5	8260B	ND		4.7	0.64	ug/kg	1
trans-1,3-Dichloropropene	10061-02-6	8260B	ND		4.7	0.77	ug/kg	1
Ethylbenzene	100-41-4	8260B	ND		4.7	1.6	ug/kg	1
2-Hexanone	591-78-6	8260B	ND		9.4	1.2	ug/kg	1
Isopropylbenzene	98-82-8	8260B	ND		4.7	0.75	ug/kg	1
Methyl acetate	79-20-9	8260B	ND		4.7	0.63	ug/kg	1
Methyl tertiary butyl ether (MTBE)	1634-04-4	8260B	ND		4.7	0.37	ug/kg	1
4-Methyl-2-pentanone	108-10-1	8260B	ND		9.4	1.4	ug/kg	1
Methylcyclohexane	108-87-2	8260B	ND		4.7	0.57	ug/kg	1
Methylene chloride	75-09-2	8260B	ND		4.7	2.4	ug/kg	1
Styrene	100-42-5	8260B	ND		4.7	1.0	ug/kg	1
1,1,2,2-Tetrachloroethane	79-34-5	8260B	ND		4.7	0.44	ug/kg	1
Tetrachloroethene	127-18-4	8260B	ND		4.7	2.2	ug/kg	1
Toluene	108-88-3	8260B	ND		4.7	1.6	ug/kg	1
1,1,2-Trichloro-1,2,2-Trifluoroethane	76-13-1	8260B	ND		4.7	2.0	ug/kg	1
1,2,4-Trichlorobenzene	120-82-1	8260B	ND		4.7	1.6	ug/kg	1
1,1,1-Trichloroethane	71-55-6	8260B	ND		4.7	0.80	ug/kg	1
1,1,2-Trichloroethane	79-00-5	8260B	ND		4.7	0.74	ug/kg	1

PQL = Practical quantitation limit
B = Detected in the method blank
E = Quantitation of compound exceeded the calibration range
ND = Not detected at or above the MDL
J = Estimated result < PQL and ≥ MDL
P = The RPD between two GC columns exceeds 40%
Where applicable, all soil sample analysis are reported on a dry weight basis unless flagged with a "W"
N = Recovery is out of criteria
H = Out of holding time

Volatile Organic Compounds by GC/MS

Client: **ARCADIS U.S., Inc.**
Laboratory ID: **LC17068-010**
Description: **F39SB010 (3.0-3.5)**
Matrix: **Solid**
Date Sampled: **03/16/2010 0850**
% Solids: **90.1** **03/17/2010 2329**
Date Received: **03/17/2010**

Run	Prep Method	Analytical Method	Dilution	Analysis Date	Analyst	Prep Date	Batch	Sample Wt.(g)
1	5035	8260B	1	03/20/2010 2056	DLB		29863	5.93

Parameter	CAS Number	Analytical Method	Result	Q	PQL	MDL	Units	Run
Trichloroethene	79-01-6	8260B	ND		4.7	1.8	ug/kg	1
Trichlorofluoromethane	75-69-4	8260B	ND		4.7	1.4	ug/kg	1
Vinyl chloride	75-01-4	8260B	ND		4.7	0.80	ug/kg	1
Xylenes (total)	1330-20-7	8260B	ND		4.7	2.7	ug/kg	1

Surrogate	Q	Run 1 % Recovery	Acceptance Limits
1,2-Dichloroethane-d4		92	53-142
Bromofluorobenzene		95	47-138
Toluene-d8		99	68-124

PQL = Practical quantitation limit
B = Detected in the method blank
E = Quantitation of compound exceeded the calibration range
ND = Not detected at or above the MDL
J = Estimated result < PQL and ≥ MDL
P = The RPD between two GC columns exceeds 40%
Where applicable, all soil sample analysis are reported on a dry weight basis unless flagged with a "W"
N = Recovery is out of criteria
H = Out of holding time

Semivolatile Organic Compounds by GC/MS

Client: **ARCADIS U.S., Inc.**
Laboratory ID: **LC17068-010**
Description: **F39SB010 (3.0-3.5)**
Matrix: **Solid**
Date Sampled: **03/16/2010 0850**
% Solids: **90.1** **03/17/2010 2329**
Date Received: **03/17/2010**

Run	Prep Method	Analytical Method	Dilution	Analysis Date	Analyst	Prep Date	Batch
1	3550C	8270D	1	03/22/2010 2005	WD	03/19/2010 1000	29722

Parameter	CAS Number	Analytical Method	Result	Q	PQL	MDL	Units	Run
Acenaphthene	83-32-9	8270D	ND		73	12	ug/kg	1
Acenaphthylene	**208-96-8**	**8270D**	**29**	**J**	**73**	**11**	**ug/kg**	**1**
Acetophenone	98-86-2	8270D	ND		73	20	ug/kg	1
Anthracene	120-12-7	8270D	ND		73	8.0	ug/kg	1
Atrazine	1912-24-9	8270D	ND		73	18	ug/kg	1
Benzaldehyde	100-52-7	8270D	ND		73	18	ug/kg	1
Benzo(a)anthracene	**56-55-3**	**8270D**	**38**	**J**	**73**	**9.6**	**ug/kg**	**1**
Benzo(a)pyrene	50-32-8	8270D	ND		73	10	ug/kg	1
Benzo(b)fluoranthene	**205-99-2**	**8270D**	**73**		**73**	**10**	**ug/kg**	**1**
Benzo(g,h,i)perylene	191-24-2	8270D	ND		73	13	ug/kg	1
Benzo(k)fluoranthene	**207-08-9**	**8270D**	**21**	**J**	**73**	**10**	**ug/kg**	**1**
1,1'-Biphenyl	92-52-4	8270D	ND		73	11	ug/kg	1
4-Bromophenyl phenyl ether	101-55-3	8270D	ND		73	11	ug/kg	1
Butyl benzyl phthalate	85-68-7	8270D	ND		140	48	ug/kg	1
Caprolactam	105-60-2	8270D	ND		73	18	ug/kg	1
Carbazole	86-74-8	8270D	ND		73	16	ug/kg	1
4-Chloro-3-methyl phenol	59-50-7	8270D	ND		73	9.2	ug/kg	1
4-Chloroaniline	106-47-8	8270D	ND		73	7.4	ug/kg	1
bis(2-Chloroethoxy)methane	111-91-1	8270D	ND		73	11	ug/kg	1
bis(2-Chloroethyl)ether	111-44-4	8270D	ND		73	10	ug/kg	1
bis(2-Chloroisopropyl)ether	108-60-1	8270D	ND		73	12	ug/kg	1
2-Chloronaphthalene	91-58-7	8270D	ND		73	12	ug/kg	1
2-Chlorophenol	95-57-8	8270D	ND		73	10	ug/kg	1
4-Chlorophenyl phenyl ether	7005-72-3	8270D	ND		73	12	ug/kg	1
Chrysene	**218-01-9**	**8270D**	**44**	**J**	**73**	**12**	**ug/kg**	**1**
Dibenzo(a,h)anthracene	53-70-3	8270D	ND		73	9.9	ug/kg	1
Dibenzofuran	132-64-9	8270D	ND		73	11	ug/kg	1
3,3'-Dichlorobenzidine	91-94-1	8270D	ND		360	39	ug/kg	1
2,4-Dichlorophenol	120-83-2	8270D	ND		73	11	ug/kg	1
Diethylphthalate	84-66-2	8270D	ND		73	24	ug/kg	1
Dimethyl phthalate	131-11-3	8270D	ND		73	24	ug/kg	1
2,4-Dimethylphenol	105-67-9	8270D	ND		73	14	ug/kg	1
Di-n-butyl phthalate	84-74-2	8270D	ND		73	24	ug/kg	1
4,6-Dinitro-2-methylphenol	534-52-1	8270D	ND		360	140	ug/kg	1
2,4-Dinitrophenol	51-28-5	8270D	ND		360	120	ug/kg	1
2,4-Dinitrotoluene	121-14-2	8270D	ND		140	20	ug/kg	1
2,6-Dinitrotoluene	606-20-2	8270D	ND		140	19	ug/kg	1
Di-n-octylphthalate	117-84-0	8270D	ND		73	35	ug/kg	1
bis(2-Ethylhexyl)phthalate	117-81-7	8270D	ND		73	24	ug/kg	1
Fluoranthene	**206-44-0**	**8270D**	**21**	**J**	**73**	**11**	**ug/kg**	**1**
Fluorene	86-73-7	8270D	ND		73	9.8	ug/kg	1
Hexachlorobenzene	118-74-1	8270D	ND		73	16	ug/kg	1
Hexachlorobutadiene	87-68-3	8270D	ND		73	12	ug/kg	1
Hexachlorocyclopentadiene	77-47-4	8270D	ND		360	27	ug/kg	1

PQL = Practical quantitation limit
B = Detected in the method blank
E = Quantitation of compound exceeded the calibration range
ND = Not detected at or above the MDL
J = Estimated result < PQL and ≥ MDL
P = The RPD between two GC columns exceeds 40%
Where applicable, all soil sample analysis are reported on a dry weight basis unless flagged with a "W"
N = Recovery is out of criteria
H = Out of holding time

Semivolatile Organic Compounds by GC/MS

Client: **ARCADIS U.S., Inc.**
Laboratory ID: **LC17068-010**
Description: **F39SB010 (3.0-3.5)**
Matrix: **Solid**
Date Sampled: **03/16/2010 0850**
% Solids: **90.1** **03/17/2010 2329**
Date Received: **03/17/2010**

Run	Prep Method	Analytical Method	Dilution	Analysis Date	Analyst	Prep Date	Batch
1	3550C	8270D	1	03/22/2010 2005	WD	03/19/2010 1000	29722

Parameter	CAS Number	Analytical Method	Result	Q	PQL	MDL	Units	Run
Hexachloroethane	67-72-1	8270D	ND		73	9.6	ug/kg	1
Indeno(1,2,3-c,d)pyrene	193-39-5	8270D	ND		73	11	ug/kg	1
Isophorone	78-59-1	8270D	ND		73	8.0	ug/kg	1
2-Methylnaphthalene	91-57-6	8270D	ND		73	11	ug/kg	1
2-Methylphenol	95-48-7	8270D	ND		73	6.6	ug/kg	1
3 & 4-Methylphenol	106-44-5	8270D	ND		140	13	ug/kg	1
Naphthalene	91-20-3	8270D	ND		73	11	ug/kg	1
2-Nitroaniline	88-74-4	8270D	ND		140	25	ug/kg	1
3-Nitroaniline	99-09-2	8270D	ND		140	42	ug/kg	1
4-Nitroaniline	100-01-6	8270D	ND		140	21	ug/kg	1
Nitrobenzene	98-95-3	8270D	ND		73	5.8	ug/kg	1
2-Nitrophenol	88-75-5	8270D	ND		140	20	ug/kg	1
4-Nitrophenol	100-02-7	8270D	ND		360	100	ug/kg	1
N-Nitrosodi-n-propylamine	621-64-7	8270D	ND		73	14	ug/kg	1
N-Nitrosodiphenylamine (Diphenylamine)	86-30-6	8270D	ND		73	9.0	ug/kg	1
Pentachlorophenol	87-86-5	8270D	ND		360	150	ug/kg	1
Phenanthrene	85-01-8	8270D	ND		73	9.7	ug/kg	1
Phenol	108-95-2	8270D	ND		73	9.8	ug/kg	1
Pyrene	**129-00-0**	**8270D**	**46**	**J**	**73**	**14**	**ug/kg**	**1**
2,4,5-Trichlorophenol	95-95-4	8270D	ND		73	10	ug/kg	1
2,4,6-Trichlorophenol	88-06-2	8270D	ND		73	11	ug/kg	1

Surrogate	Q	Run 1 % Recovery	Acceptance Limits
2-Fluorobiphenyl		77	33-102
2-Fluorophenol		77	28-104
Nitrobenzene-d5		63	22-109
Phenol-d5		79	27-103
Terphenyl-d14		78	41-120
2,4,6-Tribromophenol		88	30-117

PQL = Practical quantitation limit
B = Detected in the method blank
E = Quantitation of compound exceeded the calibration range
ND = Not detected at or above the MDL
J = Estimated result < PQL and ≥ MDL
P = The RPD between two GC columns exceeds 40%
Where applicable, all soil sample analysis are reported on a dry weight basis unless flagged with a "W"
N = Recovery is out of criteria
H = Out of holding time

RCRA Metals

Client: **ARCADIS U.S., Inc.**
Laboratory ID: **LC17068-010**
Description: **F39SB010 (3.0-3.5)**
Matrix: **Solid**
Date Sampled: **03/16/2010 0850**
% Solids: **90.1** **03/17/2010 2329**
Date Received: **03/17/2010**

Run	Prep Method	Analytical Method	Dilution	Analysis Date	Analyst	Prep Date	Batch
1		7471B	1	03/23/2010 0010	BNW	03/22/2010 2050	29905
1	3050B	6010C	1	03/23/2010 2349	CDF	03/22/2010 1730	29899

Parameter	CAS Number	Analytical Method	Result	Q	PQL	MDL	Units	Run
Arsenic	7440-38-2	6010C	ND		0.51	0.19	mg/kg	1
Barium	**7440-39-3**	**6010C**	**3.1**		**1.3**	**0.092**	**mg/kg**	**1**
Cadmium	**7440-43-9**	**6010C**	**0.041**	**BJ**	**0.10**	**0.011**	**mg/kg**	**1**
Chromium	**7440-47-3**	**6010C**	**1.6**	**B**	**0.25**	**0.051**	**mg/kg**	**1**
Lead	**7439-92-1**	**6010C**	**2.5**		**0.51**	**0.094**	**mg/kg**	**1**
Mercury	**7439-97-6**	**7471B**	**0.015**	**J**	**0.086**	**0.0061**	**mg/kg**	**1**
Selenium	**7782-49-2**	**6010C**	**0.30**	**BJ**	**0.51**	**0.18**	**mg/kg**	**1**
Silver	7440-22-4	6010C	ND		0.25	0.043	mg/kg	1

PQL = Practical quantitation limit
B = Detected in the method blank
E = Quantitation of compound exceeded the calibration range
ND = Not detected at or above the MDL
J = Estimated result < PQL and ≥ MDL
P = The RPD between two GC columns exceeds 40%
Where applicable, all soil sample analysis are reported on a dry weight basis unless flagged with a "W"
N = Recovery is out of criteria
H = Out of holding time

Volatile Organic Compounds by GC/MS

Client: **ARCADIS U.S., Inc.**
Laboratory ID: **LC17068-011**
Description: **F39SB011 (0.5-1.0)**
Matrix: **Solid**
Date Sampled: **03/16/2010 0918**
% Solids: **92.2** **03/17/2010 2329**
Date Received: **03/17/2010**

Run	Prep Method	Analytical Method	Dilution	Analysis Date	Analyst	Prep Date	Batch	Sample Wt.(g)
1	5035	8260B	1	03/20/2010 2119	DLB		29863	6.13

Parameter	CAS Number	Analytical Method	Result	Q	PQL	MDL	Units	Run
Acetone	**67-64-1**	**8260B**	**24**		**18**	**5.9**	**ug/kg**	**1**
Benzene	71-43-2	8260B	ND		4.4	0.97	ug/kg	1
Bromodichloromethane	75-27-4	8260B	ND		4.4	1.5	ug/kg	1
Bromoform	75-25-2	8260B	ND		4.4	0.62	ug/kg	1
Bromomethane (Methyl bromide)	74-83-9	8260B	ND		4.4	1.6	ug/kg	1
2-Butanone (MEK)	78-93-3	8260B	ND		8.8	2.1	ug/kg	1
Carbon disulfide	75-15-0	8260B	ND		4.4	1.1	ug/kg	1
Carbon tetrachloride	56-23-5	8260B	ND		4.4	1.6	ug/kg	1
Chlorobenzene	108-90-7	8260B	ND		4.4	1.5	ug/kg	1
Chloroethane	75-00-3	8260B	ND		4.4	1.1	ug/kg	1
Chloroform	67-66-3	8260B	ND		4.4	0.73	ug/kg	1
Chloromethane (Methyl chloride)	74-87-3	8260B	ND		4.4	0.88	ug/kg	1
Cyclohexane	110-82-7	8260B	ND		4.4	0.60	ug/kg	1
1,2-Dibromo-3-chloropropane (DBCP)	96-12-8	8260B	ND		4.4	1.3	ug/kg	1
Dibromochloromethane	124-48-1	8260B	ND		4.4	1.5	ug/kg	1
1,2-Dibromoethane (EDB)	106-93-4	8260B	ND		4.4	0.75	ug/kg	1
1,2-Dichlorobenzene	95-50-1	8260B	ND		4.4	1.5	ug/kg	1
1,3-Dichlorobenzene	541-73-1	8260B	ND		4.4	1.5	ug/kg	1
1,4-Dichlorobenzene	106-46-7	8260B	ND		4.4	1.5	ug/kg	1
Dichlorodifluoromethane	75-71-8	8260B	ND		4.4	1.4	ug/kg	1
1,1-Dichloroethane	75-34-3	8260B	ND		4.4	0.65	ug/kg	1
1,2-Dichloroethane	107-06-2	8260B	ND		4.4	0.88	ug/kg	1
1,1-Dichloroethene	75-35-4	8260B	ND		4.4	1.5	ug/kg	1
cis-1,2-Dichloroethene	156-59-2	8260B	ND		4.4	0.67	ug/kg	1
trans-1,2-Dichloroethene	156-60-5	8260B	ND		4.4	1.3	ug/kg	1
1,2-Dichloropropane	78-87-5	8260B	ND		4.4	0.80	ug/kg	1
cis-1,3-Dichloropropene	10061-01-5	8260B	ND		4.4	0.60	ug/kg	1
trans-1,3-Dichloropropene	10061-02-6	8260B	ND		4.4	0.73	ug/kg	1
Ethylbenzene	100-41-4	8260B	ND		4.4	1.5	ug/kg	1
2-Hexanone	591-78-6	8260B	ND		8.8	1.1	ug/kg	1
Isopropylbenzene	98-82-8	8260B	ND		4.4	0.71	ug/kg	1
Methyl acetate	79-20-9	8260B	ND		4.4	0.59	ug/kg	1
Methyl tertiary butyl ether (MTBE)	1634-04-4	8260B	ND		4.4	0.35	ug/kg	1
4-Methyl-2-pentanone	108-10-1	8260B	ND		8.8	1.3	ug/kg	1
Methylcyclohexane	108-87-2	8260B	ND		4.4	0.54	ug/kg	1
Methylene chloride	75-09-2	8260B	ND		4.4	2.3	ug/kg	1
Styrene	100-42-5	8260B	ND		4.4	0.97	ug/kg	1
1,1,2,2-Tetrachloroethane	79-34-5	8260B	ND		4.4	0.42	ug/kg	1
Tetrachloroethene	127-18-4	8260B	ND		4.4	2.0	ug/kg	1
Toluene	108-88-3	8260B	ND		4.4	1.5	ug/kg	1
1,1,2-Trichloro-1,2,2-Trifluoroethane	76-13-1	8260B	ND		4.4	1.9	ug/kg	1
1,2,4-Trichlorobenzene	120-82-1	8260B	ND		4.4	1.5	ug/kg	1
1,1,1-Trichloroethane	71-55-6	8260B	ND		4.4	0.75	ug/kg	1
1,1,2-Trichloroethane	79-00-5	8260B	ND		4.4	0.70	ug/kg	1

PQL = Practical quantitation limit
B = Detected in the method blank
E = Quantitation of compound exceeded the calibration range
ND = Not detected at or above the MDL
J = Estimated result < PQL and ≥ MDL
P = The RPD between two GC columns exceeds 40%
Where applicable, all soil sample analysis are reported on a dry weight basis unless flagged with a "W"
N = Recovery is out of criteria
H = Out of holding time

Volatile Organic Compounds by GC/MS

Client: **ARCADIS U.S., Inc.**
Laboratory ID: **LC17068-011**
Description: **F39SB011 (0.5-1.0)**
Matrix: **Solid**
Date Sampled: **03/16/2010 0918**
% Solids: **92.2** **03/17/2010 2329**
Date Received: **03/17/2010**

Run	Prep Method	Analytical Method	Dilution	Analysis Date	Analyst	Prep Date	Batch	Sample Wt.(g)
1	5035	8260B	1	03/20/2010 2119	DLB		29863	6.13

Parameter	CAS Number	Analytical Method	Result	Q	PQL	MDL	Units	Run
Trichloroethene	79-01-6	8260B	ND		4.4	1.7	ug/kg	1
Trichlorofluoromethane	75-69-4	8260B	ND		4.4	1.3	ug/kg	1
Vinyl chloride	75-01-4	8260B	ND		4.4	0.76	ug/kg	1
Xylenes (total)	1330-20-7	8260B	ND		4.4	2.6	ug/kg	1

Surrogate	Q	Run 1 % Recovery	Acceptance Limits
1,2-Dichloroethane-d4		100	53-142
Bromofluorobenzene		100	47-138
Toluene-d8		102	68-124

PQL = Practical quantitation limit
B = Detected in the method blank
E = Quantitation of compound exceeded the calibration range
ND = Not detected at or above the MDL
J = Estimated result < PQL and ≥ MDL
P = The RPD between two GC columns exceeds 40%
Where applicable, all soil sample analysis are reported on a dry weight basis unless flagged with a "W"
N = Recovery is out of criteria
H = Out of holding time

Semivolatile Organic Compounds by GC/MS

Client: **ARCADIS U.S., Inc.**
Laboratory ID: **LC17068-011**
Description: **F39SB011 (0.5-1.0)**
Matrix: **Solid**
Date Sampled: **03/16/2010 0918**
% Solids: **92.2** **03/17/2010 2329**
Date Received: **03/17/2010**

Run	Prep Method	Analytical Method	Dilution	Analysis Date	Analyst	Prep Date	Batch
1	3550C	8270D	1	03/22/2010 2024	WD	03/19/2010 1000	29722

Parameter	CAS Number	Analytical Method	Result	Q	PQL	MDL	Units	Run
Acenaphthene	83-32-9	8270D	ND		72	11	ug/kg	1
Acenaphthylene	208-96-8	8270D	ND		72	11	ug/kg	1
Acetophenone	98-86-2	8270D	ND		72	19	ug/kg	1
Anthracene	120-12-7	8270D	ND		72	7.9	ug/kg	1
Atrazine	1912-24-9	8270D	ND		72	18	ug/kg	1
Benzaldehyde	100-52-7	8270D	ND		72	18	ug/kg	1
Benzo(a)anthracene	56-55-3	8270D	ND		72	9.5	ug/kg	1
Benzo(a)pyrene	50-32-8	8270D	ND		72	10	ug/kg	1
Benzo(b)fluoranthene	205-99-2	8270D	ND		72	10	ug/kg	1
Benzo(g,h,i)perylene	191-24-2	8270D	ND		72	12	ug/kg	1
Benzo(k)fluoranthene	207-08-9	8270D	ND		72	10	ug/kg	1
1,1'-Biphenyl	92-52-4	8270D	ND		72	11	ug/kg	1
4-Bromophenyl phenyl ether	101-55-3	8270D	ND		72	11	ug/kg	1
Butyl benzyl phthalate	85-68-7	8270D	ND		140	47	ug/kg	1
Caprolactam	105-60-2	8270D	ND		72	18	ug/kg	1
Carbazole	86-74-8	8270D	ND		72	15	ug/kg	1
4-Chloro-3-methyl phenol	59-50-7	8270D	ND		72	9.0	ug/kg	1
4-Chloroaniline	106-47-8	8270D	ND		72	7.3	ug/kg	1
bis(2-Chloroethoxy)methane	111-91-1	8270D	ND		72	11	ug/kg	1
bis(2-Chloroethyl)ether	111-44-4	8270D	ND		72	9.9	ug/kg	1
bis(2-Chloroisopropyl)ether	108-60-1	8270D	ND		72	12	ug/kg	1
2-Chloronaphthalene	91-58-7	8270D	ND		72	12	ug/kg	1
2-Chlorophenol	95-57-8	8270D	ND		72	9.9	ug/kg	1
4-Chlorophenyl phenyl ether	7005-72-3	8270D	ND		72	12	ug/kg	1
Chrysene	218-01-9	8270D	ND		72	12	ug/kg	1
Dibenzo(a,h)anthracene	53-70-3	8270D	ND		72	9.7	ug/kg	1
Dibenzofuran	132-64-9	8270D	ND		72	11	ug/kg	1
3,3'-Dichlorobenzidine	91-94-1	8270D	ND		350	39	ug/kg	1
2,4-Dichlorophenol	120-83-2	8270D	ND		72	11	ug/kg	1
Diethylphthalate	84-66-2	8270D	ND		72	24	ug/kg	1
Dimethyl phthalate	131-11-3	8270D	ND		72	24	ug/kg	1
2,4-Dimethylphenol	105-67-9	8270D	ND		72	13	ug/kg	1
Di-n-butyl phthalate	84-74-2	8270D	ND		72	24	ug/kg	1
4,6-Dinitro-2-methylphenol	534-52-1	8270D	ND		350	140	ug/kg	1
2,4-Dinitrophenol	51-28-5	8270D	ND		350	120	ug/kg	1
2,4-Dinitrotoluene	121-14-2	8270D	ND		140	20	ug/kg	1
2,6-Dinitrotoluene	606-20-2	8270D	ND		140	19	ug/kg	1
Di-n-octylphthalate	117-84-0	8270D	ND		72	34	ug/kg	1
bis(2-Ethylhexyl)phthalate	117-81-7	8270D	ND		72	24	ug/kg	1
Fluoranthene	206-44-0	8270D	ND		72	11	ug/kg	1
Fluorene	86-73-7	8270D	ND		72	9.6	ug/kg	1
Hexachlorobenzene	118-74-1	8270D	ND		72	16	ug/kg	1
Hexachlorobutadiene	87-68-3	8270D	ND		72	12	ug/kg	1
Hexachlorocyclopentadiene	77-47-4	8270D	ND		350	26	ug/kg	1

PQL = Practical quantitation limit
B = Detected in the method blank
E = Quantitation of compound exceeded the calibration range
ND = Not detected at or above the MDL
J = Estimated result < PQL and ≥ MDL
P = The RPD between two GC columns exceeds 40%
Where applicable, all soil sample analysis are reported on a dry weight basis unless flagged with a "W"
N = Recovery is out of criteria
H = Out of holding time

Semivolatile Organic Compounds by GC/MS

Client: **ARCADIS U.S., Inc.**
Laboratory ID: **LC17068-011**
Description: **F39SB011 (0.5-1.0)**
Matrix: **Solid**
Date Sampled: **03/16/2010 0918**
% Solids: **92.2** **03/17/2010 2329**
Date Received: **03/17/2010**

Run	Prep Method	Analytical Method	Dilution	Analysis Date	Analyst	Prep Date	Batch
1	3550C	8270D	1	03/22/2010 2024	WD	03/19/2010 1000	29722

Parameter	CAS Number	Analytical Method	Result	Q	PQL	MDL	Units	Run
Hexachloroethane	67-72-1	8270D	ND		72	9.5	ug/kg	1
Indeno(1,2,3-c,d)pyrene	193-39-5	8270D	ND		72	10	ug/kg	1
Isophorone	78-59-1	8270D	ND		72	7.9	ug/kg	1
2-Methylnaphthalene	91-57-6	8270D	ND		72	11	ug/kg	1
2-Methylphenol	95-48-7	8270D	ND		72	6.5	ug/kg	1
3 & 4-Methylphenol	106-44-5	8270D	ND		140	13	ug/kg	1
Naphthalene	91-20-3	8270D	ND		72	11	ug/kg	1
2-Nitroaniline	88-74-4	8270D	ND		140	24	ug/kg	1
3-Nitroaniline	99-09-2	8270D	ND		140	42	ug/kg	1
4-Nitroaniline	100-01-6	8270D	ND		140	20	ug/kg	1
Nitrobenzene	98-95-3	8270D	ND		72	5.8	ug/kg	1
2-Nitrophenol	88-75-5	8270D	ND		140	20	ug/kg	1
4-Nitrophenol	100-02-7	8270D	ND		350	100	ug/kg	1
N-Nitrosodi-n-propylamine	621-64-7	8270D	ND		72	14	ug/kg	1
N-Nitrosodiphenylamine (Diphenylamine)	86-30-6	8270D	ND		72	8.9	ug/kg	1
Pentachlorophenol	87-86-5	8270D	ND		350	150	ug/kg	1
Phenanthrene	85-01-8	8270D	ND		72	9.6	ug/kg	1
Phenol	108-95-2	8270D	ND		72	9.7	ug/kg	1
Pyrene	129-00-0	8270D	ND		72	14	ug/kg	1
2,4,5-Trichlorophenol	95-95-4	8270D	ND		72	10	ug/kg	1
2,4,6-Trichlorophenol	88-06-2	8270D	ND		72	11	ug/kg	1

Surrogate	Q	Run 1 % Recovery	Acceptance Limits
2-Fluorobiphenyl		72	33-102
2-Fluorophenol		68	28-104
Nitrobenzene-d5		62	22-109
Phenol-d5		71	27-103
Terphenyl-d14		71	41-120
2,4,6-Tribromophenol		82	30-117

PQL = Practical quantitation limit
B = Detected in the method blank
E = Quantitation of compound exceeded the calibration range
ND = Not detected at or above the MDL
J = Estimated result < PQL and ≥ MDL
P = The RPD between two GC columns exceeds 40%
Where applicable, all soil sample analysis are reported on a dry weight basis unless flagged with a "W"
N = Recovery is out of criteria
H = Out of holding time

RCRA Metals

Client: **ARCADIS U.S., Inc.**
Laboratory ID: **LC17068-011**
Description: **F39SB011 (0.5-1.0)**
Matrix: **Solid**
Date Sampled: **03/16/2010 0918**
% Solids: **92.2** **03/17/2010 2329**
Date Received: **03/17/2010**

Run	Prep Method	Analytical Method	Dilution	Analysis Date	Analyst	Prep Date	Batch
1		7471B	1	03/23/2010 0012	BNW	03/22/2010 2050	29905
1	3050B	6010C	1	03/23/2010 2354	CDF	03/22/2010 1730	29899

Parameter	CAS Number	Analytical Method	Result	Q	PQL	MDL	Units	Run
Arsenic	7440-38-2	6010C	ND		0.50	0.19	mg/kg	1
Barium	**7440-39-3**	**6010C**	**6.3**		**1.3**	**0.090**	**mg/kg**	**1**
Cadmium	**7440-43-9**	**6010C**	**0.038**	**BJ**	**0.099**	**0.010**	**mg/kg**	**1**
Chromium	**7440-47-3**	**6010C**	**2.7**	**B**	**0.25**	**0.050**	**mg/kg**	**1**
Lead	**7439-92-1**	**6010C**	**3.6**		**0.50**	**0.092**	**mg/kg**	**1**
Mercury	**7439-97-6**	**7471B**	**0.015**	**J**	**0.089**	**0.0063**	**mg/kg**	**1**
Selenium	**7782-49-2**	**6010C**	**0.52**	**B**	**0.50**	**0.17**	**mg/kg**	**1**
Silver	7440-22-4	6010C	ND		0.25	0.042	mg/kg	1

PQL = Practical quantitation limit
B = Detected in the method blank
E = Quantitation of compound exceeded the calibration range
ND = Not detected at or above the MDL
J = Estimated result < PQL and ≥ MDL
P = The RPD between two GC columns exceeds 40%
Where applicable, all soil sample analysis are reported on a dry weight basis unless flagged with a "W"
N = Recovery is out of criteria
H = Out of holding time

Volatile Organic Compounds by GC/MS

Client: **ARCADIS U.S., Inc.**
Laboratory ID: **LC17068-012**
Description: **F39SB011 (3.0-3.5)**
Matrix: **Solid**
Date Sampled: **03/16/2010 0935**
% Solids: **85.5** **03/17/2010 2329**
Date Received: **03/17/2010**

Run	Prep Method	Analytical Method	Dilution	Analysis Date	Analyst	Prep Date	Batch	Sample Wt.(g)
2	5035	8260B	1	03/22/2010 1626	LBS		29942	5.96

Parameter	CAS Number	Analytical Method	Result	Q	PQL	MDL	Units	Run
Acetone	**67-64-1**	**8260B**	**63**		**20**	**6.6**	**ug/kg**	**2**
Benzene	71-43-2	8260B	ND		4.9	1.1	ug/kg	2
Bromodichloromethane	75-27-4	8260B	ND		4.9	1.7	ug/kg	2
Bromoform	75-25-2	8260B	ND		4.9	0.69	ug/kg	2
Bromomethane (Methyl bromide)	74-83-9	8260B	ND		4.9	1.8	ug/kg	2
2-Butanone (MEK)	78-93-3	8260B	ND		9.8	2.4	ug/kg	2
Carbon disulfide	75-15-0	8260B	ND		4.9	1.3	ug/kg	2
Carbon tetrachloride	56-23-5	8260B	ND		4.9	1.8	ug/kg	2
Chlorobenzene	108-90-7	8260B	ND		4.9	1.7	ug/kg	2
Chloroethane	75-00-3	8260B	ND		4.9	1.3	ug/kg	2
Chloroform	67-66-3	8260B	ND		4.9	0.81	ug/kg	2
Chloromethane (Methyl chloride)	74-87-3	8260B	ND		4.9	0.98	ug/kg	2
Cyclohexane	110-82-7	8260B	ND		4.9	0.66	ug/kg	2
1,2-Dibromo-3-chloropropane (DBCP)	96-12-8	8260B	ND		4.9	1.5	ug/kg	2
Dibromochloromethane	124-48-1	8260B	ND		4.9	1.7	ug/kg	2
1,2-Dibromoethane (EDB)	106-93-4	8260B	ND		4.9	0.83	ug/kg	2
1,2-Dichlorobenzene	95-50-1	8260B	ND		4.9	1.7	ug/kg	2
1,3-Dichlorobenzene	541-73-1	8260B	ND		4.9	1.7	ug/kg	2
1,4-Dichlorobenzene	106-46-7	8260B	ND		4.9	1.7	ug/kg	2
Dichlorodifluoromethane	75-71-8	8260B	ND		4.9	1.6	ug/kg	2
1,1-Dichloroethane	75-34-3	8260B	ND		4.9	0.72	ug/kg	2
1,2-Dichloroethane	107-06-2	8260B	ND		4.9	0.98	ug/kg	2
1,1-Dichloroethene	75-35-4	8260B	ND		4.9	1.7	ug/kg	2
cis-1,2-Dichloroethene	156-59-2	8260B	ND		4.9	0.75	ug/kg	2
trans-1,2-Dichloroethene	156-60-5	8260B	ND		4.9	1.5	ug/kg	2
1,2-Dichloropropane	78-87-5	8260B	ND		4.9	0.89	ug/kg	2
cis-1,3-Dichloropropene	10061-01-5	8260B	ND		4.9	0.67	ug/kg	2
trans-1,3-Dichloropropene	10061-02-6	8260B	ND		4.9	0.80	ug/kg	2
Ethylbenzene	100-41-4	8260B	ND		4.9	1.7	ug/kg	2
2-Hexanone	591-78-6	8260B	ND		9.8	1.3	ug/kg	2
Isopropylbenzene	98-82-8	8260B	ND		4.9	0.78	ug/kg	2
Methyl acetate	79-20-9	8260B	ND		4.9	0.66	ug/kg	2
Methyl tertiary butyl ether (MTBE)	1634-04-4	8260B	ND		4.9	0.39	ug/kg	2
4-Methyl-2-pentanone	108-10-1	8260B	ND		9.8	1.5	ug/kg	2
Methylcyclohexane	108-87-2	8260B	ND		4.9	0.60	ug/kg	2
Methylene chloride	75-09-2	8260B	ND		4.9	2.6	ug/kg	2
Styrene	100-42-5	8260B	ND		4.9	1.1	ug/kg	2
1,1,2,2-Tetrachloroethane	79-34-5	8260B	ND		4.9	0.46	ug/kg	2
Tetrachloroethene	127-18-4	8260B	ND		4.9	2.3	ug/kg	2
Toluene	108-88-3	8260B	ND		4.9	1.7	ug/kg	2
1,1,2-Trichloro-1,2,2-Trifluoroethane	76-13-1	8260B	ND		4.9	2.1	ug/kg	2
1,2,4-Trichlorobenzene	120-82-1	8260B	ND		4.9	1.7	ug/kg	2
1,1,1-Trichloroethane	71-55-6	8260B	ND		4.9	0.83	ug/kg	2
1,1,2-Trichloroethane	79-00-5	8260B	ND		4.9	0.77	ug/kg	2

PQL = Practical quantitation limit
B = Detected in the method blank
E = Quantitation of compound exceeded the calibration range
ND = Not detected at or above the MDL
J = Estimated result < PQL and ≥ MDL
P = The RPD between two GC columns exceeds 40%
Where applicable, all soil sample analysis are reported on a dry weight basis unless flagged with a "W"
N = Recovery is out of criteria
H = Out of holding time

Volatile Organic Compounds by GC/MS

Client: **ARCADIS U.S., Inc.**
Laboratory ID: **LC17068-012**
Description: **F39SB011 (3.0-3.5)**
Matrix: **Solid**
Date Sampled: **03/16/2010 0935**
% Solids: **85.5** **03/17/2010 2329**
Date Received: **03/17/2010**

Run	Prep Method	Analytical Method	Dilution	Analysis Date	Analyst	Prep Date	Batch	Sample Wt.(g)
2	5035	8260B	1	03/22/2010 1626	LBS		29942	5.96

Parameter	CAS Number	Analytical Method	Result	Q	PQL	MDL	Units	Run
Trichloroethene	79-01-6	8260B	ND		4.9	1.9	ug/kg	2
Trichlorofluoromethane	75-69-4	8260B	ND		4.9	1.5	ug/kg	2
Vinyl chloride	75-01-4	8260B	ND		4.9	0.84	ug/kg	2
Xylenes (total)	1330-20-7	8260B	ND		4.9	2.8	ug/kg	2

Surrogate	Q	Run 2 % Recovery	Acceptance Limits
1,2-Dichloroethane-d4		95	53-142
Bromofluorobenzene		86	47-138
Toluene-d8		103	68-124

PQL = Practical quantitation limit
B = Detected in the method blank
E = Quantitation of compound exceeded the calibration range
ND = Not detected at or above the MDL
J = Estimated result < PQL and ≥ MDL
P = The RPD between two GC columns exceeds 40%
Where applicable, all soil sample analysis are reported on a dry weight basis unless flagged with a "W"
N = Recovery is out of criteria
H = Out of holding time

Semivolatile Organic Compounds by GC/MS

Client: **ARCADIS U.S., Inc.**
Laboratory ID: **LC17068-012**
Description: **F39SB011 (3.0-3.5)**
Matrix: **Solid**
Date Sampled: **03/16/2010 0935**
% Solids: **85.5** **03/17/2010 2329**
Date Received: **03/17/2010**

Run	Prep Method	Analytical Method	Dilution	Analysis Date	Analyst	Prep Date	Batch
1	3550C	8270D	1	03/22/2010 2043	WD	03/19/2010 1000	29722

Parameter	CAS Number	Analytical Method	Result	Q	PQL	MDL	Units	Run
Acenaphthene	83-32-9	8270D	ND		76	12	ug/kg	1
Acenaphthylene	208-96-8	8270D	ND		76	12	ug/kg	1
Acetophenone	98-86-2	8270D	ND		76	20	ug/kg	1
Anthracene	120-12-7	8270D	ND		76	8.4	ug/kg	1
Atrazine	1912-24-9	8270D	ND		76	19	ug/kg	1
Benzaldehyde	**100-52-7**	**8270D**	**97**		**76**	**19**	**ug/kg**	**1**
Benzo(a)anthracene	56-55-3	8270D	ND		76	10	ug/kg	1
Benzo(a)pyrene	50-32-8	8270D	ND		76	11	ug/kg	1
Benzo(b)fluoranthene	205-99-2	8270D	ND		76	11	ug/kg	1
Benzo(g,h,i)perylene	191-24-2	8270D	ND		76	13	ug/kg	1
Benzo(k)fluoranthene	207-08-9	8270D	ND		76	11	ug/kg	1
1,1'-Biphenyl	92-52-4	8270D	ND		76	11	ug/kg	1
4-Bromophenyl phenyl ether	101-55-3	8270D	ND		76	11	ug/kg	1
Butyl benzyl phthalate	85-68-7	8270D	ND		150	50	ug/kg	1
Caprolactam	105-60-2	8270D	ND		76	19	ug/kg	1
Carbazole	86-74-8	8270D	ND		76	16	ug/kg	1
4-Chloro-3-methyl phenol	59-50-7	8270D	ND		76	9.6	ug/kg	1
4-Chloroaniline	106-47-8	8270D	ND		76	7.7	ug/kg	1
bis(2-Chloroethoxy)methane	111-91-1	8270D	ND		76	11	ug/kg	1
bis(2-Chloroethyl)ether	111-44-4	8270D	ND		76	10	ug/kg	1
bis(2-Chloroisopropyl)ether	108-60-1	8270D	ND		76	12	ug/kg	1
2-Chloronaphthalene	91-58-7	8270D	ND		76	12	ug/kg	1
2-Chlorophenol	95-57-8	8270D	ND		76	10	ug/kg	1
4-Chlorophenyl phenyl ether	7005-72-3	8270D	ND		76	13	ug/kg	1
Chrysene	218-01-9	8270D	ND		76	13	ug/kg	1
Dibenzo(a,h)anthracene	53-70-3	8270D	ND		76	10	ug/kg	1
Dibenzofuran	132-64-9	8270D	ND		76	12	ug/kg	1
3,3'-Dichlorobenzidine	91-94-1	8270D	ND		370	41	ug/kg	1
2,4-Dichlorophenol	120-83-2	8270D	ND		76	12	ug/kg	1
Diethylphthalate	84-66-2	8270D	ND		76	25	ug/kg	1
Dimethyl phthalate	131-11-3	8270D	ND		76	25	ug/kg	1
2,4-Dimethylphenol	105-67-9	8270D	ND		76	14	ug/kg	1
Di-n-butyl phthalate	84-74-2	8270D	ND		76	25	ug/kg	1
4,6-Dinitro-2-methylphenol	534-52-1	8270D	ND		370	150	ug/kg	1
2,4-Dinitrophenol	51-28-5	8270D	ND		370	130	ug/kg	1
2,4-Dinitrotoluene	121-14-2	8270D	ND		150	21	ug/kg	1
2,6-Dinitrotoluene	606-20-2	8270D	ND		150	20	ug/kg	1
Di-n-octylphthalate	117-84-0	8270D	ND		76	36	ug/kg	1
bis(2-Ethylhexyl)phthalate	117-81-7	8270D	ND		76	25	ug/kg	1
Fluoranthene	206-44-0	8270D	ND		76	12	ug/kg	1
Fluorene	86-73-7	8270D	ND		76	10	ug/kg	1
Hexachlorobenzene	118-74-1	8270D	ND		76	17	ug/kg	1
Hexachlorobutadiene	87-68-3	8270D	ND		76	12	ug/kg	1
Hexachlorocyclopentadiene	77-47-4	8270D	ND		370	28	ug/kg	1

PQL = Practical quantitation limit
B = Detected in the method blank
E = Quantitation of compound exceeded the calibration range
ND = Not detected at or above the MDL
J = Estimated result < PQL and ≥ MDL
P = The RPD between two GC columns exceeds 40%
Where applicable, all soil sample analysis are reported on a dry weight basis unless flagged with a "W"
N = Recovery is out of criteria
H = Out of holding time

Semivolatile Organic Compounds by GC/MS

Client: **ARCADIS U.S., Inc.**
Laboratory ID: **LC17068-012**
Description: **F39SB011 (3.0-3.5)**
Matrix: **Solid**
Date Sampled: **03/16/2010 0935**
% Solids: **85.5** **03/17/2010 2329**
Date Received: **03/17/2010**

Run	Prep Method	Analytical Method	Dilution	Analysis Date	Analyst	Prep Date	Batch
1	3550C	8270D	1	03/22/2010 2043	WD	03/19/2010 1000	29722

Parameter	CAS Number	Analytical Method	Result	Q	PQL	MDL	Units	Run
Hexachloroethane	67-72-1	8270D	ND		76	10	ug/kg	1
Indeno(1,2,3-c,d)pyrene	193-39-5	8270D	ND		76	11	ug/kg	1
Isophorone	78-59-1	8270D	ND		76	8.3	ug/kg	1
2-Methylnaphthalene	91-57-6	8270D	ND		76	11	ug/kg	1
2-Methylphenol	95-48-7	8270D	ND		76	6.8	ug/kg	1
3 & 4-Methylphenol	106-44-5	8270D	ND		150	14	ug/kg	1
Naphthalene	91-20-3	8270D	ND		76	12	ug/kg	1
2-Nitroaniline	88-74-4	8270D	ND		150	26	ug/kg	1
3-Nitroaniline	99-09-2	8270D	ND		150	44	ug/kg	1
4-Nitroaniline	100-01-6	8270D	ND		150	22	ug/kg	1
Nitrobenzene	98-95-3	8270D	ND		76	6.1	ug/kg	1
2-Nitrophenol	88-75-5	8270D	ND		150	21	ug/kg	1
4-Nitrophenol	100-02-7	8270D	ND		370	110	ug/kg	1
N-Nitrosodi-n-propylamine	621-64-7	8270D	ND		76	14	ug/kg	1
N-Nitrosodiphenylamine (Diphenylamine)	86-30-6	8270D	ND		76	9.4	ug/kg	1
Pentachlorophenol	87-86-5	8270D	ND		370	160	ug/kg	1
Phenanthrene	85-01-8	8270D	ND		76	10	ug/kg	1
Phenol	108-95-2	8270D	ND		76	10	ug/kg	1
Pyrene	129-00-0	8270D	ND		76	15	ug/kg	1
2,4,5-Trichlorophenol	95-95-4	8270D	ND		76	11	ug/kg	1
2,4,6-Trichlorophenol	88-06-2	8270D	ND		76	11	ug/kg	1

Surrogate	Q	Run 1 % Recovery	Acceptance Limits
2-Fluorobiphenyl		67	33-102
2-Fluorophenol		63	28-104
Nitrobenzene-d5		60	22-109
Phenol-d5		67	27-103
Terphenyl-d14		62	41-120
2,4,6-Tribromophenol		76	30-117

PQL = Practical quantitation limit
B = Detected in the method blank
E = Quantitation of compound exceeded the calibration range
ND = Not detected at or above the MDL
J = Estimated result < PQL and ≥ MDL
P = The RPD between two GC columns exceeds 40%
Where applicable, all soil sample analysis are reported on a dry weight basis unless flagged with a "W"
N = Recovery is out of criteria
H = Out of holding time

RCRA Metals

Client: **ARCADIS U.S., Inc.**
Laboratory ID: **LC17068-012**
Description: **F39SB011 (3.0-3.5)**
Matrix: **Solid**
Date Sampled: **03/16/2010 0935**
% Solids: **85.5** **03/17/2010 2329**
Date Received: **03/17/2010**

Run	Prep Method	Analytical Method	Dilution	Analysis Date	Analyst	Prep Date	Batch
1		7471B	1	03/23/2010 0014	BNW	03/22/2010 2050	29905
1	3050B	6010C	1	03/23/2010 2359	CDF	03/22/2010 1730	29899

Parameter	CAS Number	Analytical Method	Result	Q	PQL	MDL	Units	Run
Arsenic	**7440-38-2**	**6010C**	**0.48**	**J**	**0.57**	**0.21**	**mg/kg**	**1**
Barium	**7440-39-3**	**6010C**	**3.0**		**1.5**	**0.10**	**mg/kg**	**1**
Cadmium	**7440-43-9**	**6010C**	**0.030**	**BJ**	**0.11**	**0.012**	**mg/kg**	**1**
Chromium	**7440-47-3**	**6010C**	**1.0**	**B**	**0.28**	**0.057**	**mg/kg**	**1**
Lead	**7439-92-1**	**6010C**	**2.1**		**0.57**	**0.10**	**mg/kg**	**1**
Mercury	7439-97-6	7471B	ND		0.094	0.0067	mg/kg	1
Selenium	**7782-49-2**	**6010C**	**0.38**	**BJ**	**0.57**	**0.20**	**mg/kg**	**1**
Silver	7440-22-4	6010C	ND		0.28	0.047	mg/kg	1

PQL = Practical quantitation limit
B = Detected in the method blank
E = Quantitation of compound exceeded the calibration range
ND = Not detected at or above the MDL
J = Estimated result < PQL and ≥ MDL
P = The RPD between two GC columns exceeds 40%
Where applicable, all soil sample analysis are reported on a dry weight basis unless flagged with a "W"
N = Recovery is out of criteria
H = Out of holding time

Volatile Organic Compounds by GC/MS

Client: **ARCADIS U.S., Inc.**
Laboratory ID: **LC17068-013**
Description: **F39SB012 (0.5-1.0)**
Matrix: **Solid**
Date Sampled: **03/16/2010 1000**
% Solids: **95.9** **03/17/2010 2329**
Date Received: **03/17/2010**

Run	Prep Method	Analytical Method	Dilution	Analysis Date	Analyst	Prep Date	Batch	Sample Wt.(g)
1	5035	8260B	1	03/20/2010 2206	DLB		29863	5.74

Parameter	CAS Number	Analytical Method	Result	Q	PQL	MDL	Units	Run
Acetone	**67-64-1**	**8260B**	**15**	**J**	**18**	**6.1**	**ug/kg**	**1**
Benzene	71-43-2	8260B	ND		4.5	1.0	ug/kg	1
Bromodichloromethane	75-27-4	8260B	ND		4.5	1.5	ug/kg	1
Bromoform	75-25-2	8260B	ND		4.5	0.64	ug/kg	1
Bromomethane (Methyl bromide)	74-83-9	8260B	ND		4.5	1.6	ug/kg	1
2-Butanone (MEK)	78-93-3	8260B	ND		9.1	2.2	ug/kg	1
Carbon disulfide	75-15-0	8260B	ND		4.5	1.2	ug/kg	1
Carbon tetrachloride	56-23-5	8260B	ND		4.5	1.6	ug/kg	1
Chlorobenzene	108-90-7	8260B	ND		4.5	1.5	ug/kg	1
Chloroethane	75-00-3	8260B	ND		4.5	1.2	ug/kg	1
Chloroform	67-66-3	8260B	ND		4.5	0.75	ug/kg	1
Chloromethane (Methyl chloride)	74-87-3	8260B	ND		4.5	0.91	ug/kg	1
Cyclohexane	110-82-7	8260B	ND		4.5	0.61	ug/kg	1
1,2-Dibromo-3-chloropropane (DBCP)	96-12-8	8260B	ND		4.5	1.4	ug/kg	1
Dibromochloromethane	124-48-1	8260B	ND		4.5	1.5	ug/kg	1
1,2-Dibromoethane (EDB)	106-93-4	8260B	ND		4.5	0.77	ug/kg	1
1,2-Dichlorobenzene	95-50-1	8260B	ND		4.5	1.5	ug/kg	1
1,3-Dichlorobenzene	541-73-1	8260B	ND		4.5	1.5	ug/kg	1
1,4-Dichlorobenzene	106-46-7	8260B	ND		4.5	1.5	ug/kg	1
Dichlorodifluoromethane	75-71-8	8260B	ND		4.5	1.5	ug/kg	1
1,1-Dichloroethane	75-34-3	8260B	ND		4.5	0.66	ug/kg	1
1,2-Dichloroethane	107-06-2	8260B	ND		4.5	0.91	ug/kg	1
1,1-Dichloroethene	75-35-4	8260B	ND		4.5	1.5	ug/kg	1
cis-1,2-Dichloroethene	156-59-2	8260B	ND		4.5	0.69	ug/kg	1
trans-1,2-Dichloroethene	156-60-5	8260B	ND		4.5	1.4	ug/kg	1
1,2-Dichloropropane	78-87-5	8260B	ND		4.5	0.83	ug/kg	1
cis-1,3-Dichloropropene	10061-01-5	8260B	ND		4.5	0.62	ug/kg	1
trans-1,3-Dichloropropene	10061-02-6	8260B	ND		4.5	0.74	ug/kg	1
Ethylbenzene	100-41-4	8260B	ND		4.5	1.5	ug/kg	1
2-Hexanone	591-78-6	8260B	ND		9.1	1.2	ug/kg	1
Isopropylbenzene	98-82-8	8260B	ND		4.5	0.73	ug/kg	1
Methyl acetate	79-20-9	8260B	ND		4.5	0.61	ug/kg	1
Methyl tertiary butyl ether (MTBE)	1634-04-4	8260B	ND		4.5	0.36	ug/kg	1
4-Methyl-2-pentanone	108-10-1	8260B	ND		9.1	1.4	ug/kg	1
Methylcyclohexane	108-87-2	8260B	ND		4.5	0.55	ug/kg	1
Methylene chloride	75-09-2	8260B	ND		4.5	2.4	ug/kg	1
Styrene	100-42-5	8260B	ND		4.5	1.0	ug/kg	1
1,1,2,2-Tetrachloroethane	79-34-5	8260B	ND		4.5	0.43	ug/kg	1
Tetrachloroethene	127-18-4	8260B	ND		4.5	2.1	ug/kg	1
Toluene	108-88-3	8260B	ND		4.5	1.5	ug/kg	1
1,1,2-Trichloro-1,2,2-Trifluoroethane	76-13-1	8260B	ND		4.5	1.9	ug/kg	1
1,2,4-Trichlorobenzene	120-82-1	8260B	ND		4.5	1.5	ug/kg	1
1,1,1-Trichloroethane	71-55-6	8260B	ND		4.5	0.77	ug/kg	1
1,1,2-Trichloroethane	79-00-5	8260B	ND		4.5	0.72	ug/kg	1

PQL = Practical quantitation limit
B = Detected in the method blank
E = Quantitation of compound exceeded the calibration range
ND = Not detected at or above the MDL
J = Estimated result < PQL and ≥ MDL
P = The RPD between two GC columns exceeds 40%
Where applicable, all soil sample analysis are reported on a dry weight basis unless flagged with a "W"
N = Recovery is out of criteria
H = Out of holding time

Volatile Organic Compounds by GC/MS

Client: **ARCADIS U.S., Inc.**
Laboratory ID: **LC17068-013**
Description: **F39SB012 (0.5-1.0)**
Matrix: **Solid**
Date Sampled: **03/16/2010 1000**
% Solids: **95.9** **03/17/2010 2329**
Date Received: **03/17/2010**

Run	Prep Method	Analytical Method	Dilution	Analysis Date	Analyst	Prep Date	Batch	Sample Wt.(g)
1	5035	8260B	1	03/20/2010 2206	DLB		29863	5.74

Parameter	CAS Number	Analytical Method	Result	Q	PQL	MDL	Units	Run
Trichloroethene	79-01-6	8260B	ND		4.5	1.7	ug/kg	1
Trichlorofluoromethane	75-69-4	8260B	ND		4.5	1.4	ug/kg	1
Vinyl chloride	75-01-4	8260B	ND		4.5	0.78	ug/kg	1
Xylenes (total)	1330-20-7	8260B	ND		4.5	2.6	ug/kg	1

Surrogate	Q	Run 1 % Recovery	Acceptance Limits
1,2-Dichloroethane-d4		96	53-142
Bromofluorobenzene		99	47-138
Toluene-d8		104	68-124

PQL = Practical quantitation limit
B = Detected in the method blank
E = Quantitation of compound exceeded the calibration range
ND = Not detected at or above the MDL
J = Estimated result < PQL and ≥ MDL
P = The RPD between two GC columns exceeds 40%
Where applicable, all soil sample analysis are reported on a dry weight basis unless flagged with a "W"
N = Recovery is out of criteria
H = Out of holding time

Semivolatile Organic Compounds by GC/MS

Client: **ARCADIS U.S., Inc.**
Laboratory ID: **LC17068-013**
Description: **F39SB012 (0.5-1.0)**
Matrix: **Solid**
Date Sampled: **03/16/2010 1000**
% Solids: **95.9** **03/17/2010 2329**
Date Received: **03/17/2010**

Run	Prep Method	Analytical Method	Dilution	Analysis Date	Analyst	Prep Date	Batch
1	3550C	8270D	1	03/22/2010 2102	WD	03/19/2010 1000	29722

Parameter	CAS Number	Analytical Method	Result	Q	PQL	MDL	Units	Run
Acenaphthene	83-32-9	8270D	ND		69	11	ug/kg	1
Acenaphthylene	208-96-8	8270D	ND		69	11	ug/kg	1
Acetophenone	98-86-2	8270D	ND		69	18	ug/kg	1
Anthracene	120-12-7	8270D	ND		69	7.5	ug/kg	1
Atrazine	1912-24-9	8270D	ND		69	17	ug/kg	1
Benzaldehyde	100-52-7	8270D	ND		69	17	ug/kg	1
Benzo(a)anthracene	56-55-3	8270D	ND		69	9.0	ug/kg	1
Benzo(a)pyrene	50-32-8	8270D	ND		69	9.5	ug/kg	1
Benzo(b)fluoranthene	205-99-2	8270D	ND		69	9.8	ug/kg	1
Benzo(g,h,i)perylene	191-24-2	8270D	ND		69	12	ug/kg	1
Benzo(k)fluoranthene	207-08-9	8270D	ND		69	9.7	ug/kg	1
1,1'-Biphenyl	92-52-4	8270D	ND		69	10	ug/kg	1
4-Bromophenyl phenyl ether	101-55-3	8270D	ND		69	10	ug/kg	1
Butyl benzyl phthalate	85-68-7	8270D	ND		130	45	ug/kg	1
Caprolactam	105-60-2	8270D	ND		69	17	ug/kg	1
Carbazole	86-74-8	8270D	ND		69	15	ug/kg	1
4-Chloro-3-methyl phenol	59-50-7	8270D	ND		69	8.6	ug/kg	1
4-Chloroaniline	106-47-8	8270D	ND		69	6.9	ug/kg	1
bis(2-Chloroethoxy)methane	111-91-1	8270D	ND		69	10	ug/kg	1
bis(2-Chloroethyl)ether	111-44-4	8270D	ND		69	9.4	ug/kg	1
bis(2-Chloroisopropyl)ether	108-60-1	8270D	ND		69	11	ug/kg	1
2-Chloronaphthalene	91-58-7	8270D	ND		69	11	ug/kg	1
2-Chlorophenol	95-57-8	8270D	ND		69	9.4	ug/kg	1
4-Chlorophenyl phenyl ether	7005-72-3	8270D	ND		69	12	ug/kg	1
Chrysene	218-01-9	8270D	ND		69	11	ug/kg	1
Dibenzo(a,h)anthracene	53-70-3	8270D	ND		69	9.3	ug/kg	1
Dibenzofuran	132-64-9	8270D	ND		69	11	ug/kg	1
3,3'-Dichlorobenzidine	91-94-1	8270D	ND		340	37	ug/kg	1
2,4-Dichlorophenol	120-83-2	8270D	ND		69	11	ug/kg	1
Diethylphthalate	84-66-2	8270D	ND		69	22	ug/kg	1
Dimethyl phthalate	131-11-3	8270D	ND		69	22	ug/kg	1
2,4-Dimethylphenol	105-67-9	8270D	ND		69	13	ug/kg	1
Di-n-butyl phthalate	84-74-2	8270D	ND		69	22	ug/kg	1
4,6-Dinitro-2-methylphenol	534-52-1	8270D	ND		340	130	ug/kg	1
2,4-Dinitrophenol	51-28-5	8270D	ND		340	120	ug/kg	1
2,4-Dinitrotoluene	121-14-2	8270D	ND		130	19	ug/kg	1
2,6-Dinitrotoluene	606-20-2	8270D	ND		130	18	ug/kg	1
Di-n-octylphthalate	117-84-0	8270D	ND		69	33	ug/kg	1
bis(2-Ethylhexyl)phthalate	117-81-7	8270D	ND		69	22	ug/kg	1
Fluoranthene	206-44-0	8270D	ND		69	11	ug/kg	1
Fluorene	86-73-7	8270D	ND		69	9.2	ug/kg	1
Hexachlorobenzene	118-74-1	8270D	ND		69	15	ug/kg	1
Hexachlorobutadiene	87-68-3	8270D	ND		69	11	ug/kg	1
Hexachlorocyclopentadiene	77-47-4	8270D	ND		340	25	ug/kg	1

PQL = Practical quantitation limit
B = Detected in the method blank
E = Quantitation of compound exceeded the calibration range
ND = Not detected at or above the MDL
J = Estimated result < PQL and ≥ MDL
P = The RPD between two GC columns exceeds 40%
Where applicable, all soil sample analysis are reported on a dry weight basis unless flagged with a "W"
N = Recovery is out of criteria
H = Out of holding time

Semivolatile Organic Compounds by GC/MS

Client: **ARCADIS U.S., Inc.**
Laboratory ID: **LC17068-013**
Description: **F39SB012 (0.5-1.0)**
Matrix: **Solid**
Date Sampled: **03/16/2010 1000**
% Solids: **95.9** **03/17/2010 2329**
Date Received: **03/17/2010**

Run	Prep Method	Analytical Method	Dilution	Analysis Date	Analyst	Prep Date	Batch
1	3550C	8270D	1	03/22/2010 2102	WD	03/19/2010 1000	29722

Parameter	CAS Number	Analytical Method	Result	Q	PQL	MDL	Units	Run
Hexachloroethane	67-72-1	8270D	ND		69	9.1	ug/kg	1
Indeno(1,2,3-c,d)pyrene	193-39-5	8270D	ND		69	10	ug/kg	1
Isophorone	78-59-1	8270D	ND		69	7.5	ug/kg	1
2-Methylnaphthalene	91-57-6	8270D	ND		69	10	ug/kg	1
2-Methylphenol	95-48-7	8270D	ND		69	6.2	ug/kg	1
3 & 4-Methylphenol	106-44-5	8270D	ND		130	12	ug/kg	1
Naphthalene	91-20-3	8270D	ND		69	10	ug/kg	1
2-Nitroaniline	88-74-4	8270D	ND		130	23	ug/kg	1
3-Nitroaniline	99-09-2	8270D	ND		130	40	ug/kg	1
4-Nitroaniline	100-01-6	8270D	ND		130	19	ug/kg	1
Nitrobenzene	98-95-3	8270D	ND		69	5.5	ug/kg	1
2-Nitrophenol	88-75-5	8270D	ND		130	19	ug/kg	1
4-Nitrophenol	100-02-7	8270D	ND		340	98	ug/kg	1
N-Nitrosodi-n-propylamine	621-64-7	8270D	ND		69	13	ug/kg	1
N-Nitrosodiphenylamine (Diphenylamine)	86-30-6	8270D	ND		69	8.4	ug/kg	1
Pentachlorophenol	87-86-5	8270D	ND		340	140	ug/kg	1
Phenanthrene	85-01-8	8270D	ND		69	9.2	ug/kg	1
Phenol	108-95-2	8270D	ND		69	9.3	ug/kg	1
Pyrene	129-00-0	8270D	ND		69	14	ug/kg	1
2,4,5-Trichlorophenol	95-95-4	8270D	ND		69	9.5	ug/kg	1
2,4,6-Trichlorophenol	88-06-2	8270D	ND		69	10	ug/kg	1

Surrogate	Q	Run 1 % Recovery	Acceptance Limits
2-Fluorobiphenyl		67	33-102
2-Fluorophenol		62	28-104
Nitrobenzene-d5		55	22-109
Phenol-d5		64	27-103
Terphenyl-d14		70	41-120
2,4,6-Tribromophenol		80	30-117

PQL = Practical quantitation limit
B = Detected in the method blank
E = Quantitation of compound exceeded the calibration range
ND = Not detected at or above the MDL
J = Estimated result < PQL and ≥ MDL
P = The RPD between two GC columns exceeds 40%
Where applicable, all soil sample analysis are reported on a dry weight basis unless flagged with a "W"
N = Recovery is out of criteria
H = Out of holding time

RCRA Metals

Client: **ARCADIS U.S., Inc.**
Laboratory ID: **LC17068-013**
Description: **F39SB012 (0.5-1.0)**
Matrix: **Solid**
Date Sampled: **03/16/2010 1000**
% Solids: **95.9** **03/17/2010 2329**
Date Received: **03/17/2010**

Run	Prep Method	Analytical Method	Dilution	Analysis Date	Analyst	Prep Date	Batch
1		7471B	1	03/23/2010 0016	BNW	03/22/2010 2050	29905
1	3050B	6010C	1	03/24/2010 0003	CDF	03/22/2010 1730	29899

Parameter	CAS Number	Analytical Method	Result	Q	PQL	MDL	Units	Run
Arsenic	7440-38-2	6010C	ND		0.51	0.19	mg/kg	1
Barium	**7440-39-3**	**6010C**	**1.1**	**J**	**1.3**	**0.092**	**mg/kg**	**1**
Cadmium	**7440-43-9**	**6010C**	**0.014**	**BJ**	**0.10**	**0.011**	**mg/kg**	**1**
Chromium	**7440-47-3**	**6010C**	**0.38**	**B**	**0.25**	**0.051**	**mg/kg**	**1**
Lead	**7439-92-1**	**6010C**	**0.81**		**0.51**	**0.094**	**mg/kg**	**1**
Mercury	7439-97-6	7471B	ND		0.086	0.0061	mg/kg	1
Selenium	7782-49-2	6010C	ND		0.51	0.18	mg/kg	1
Silver	7440-22-4	6010C	ND		0.25	0.043	mg/kg	1

PQL = Practical quantitation limit
B = Detected in the method blank
E = Quantitation of compound exceeded the calibration range
ND = Not detected at or above the MDL
J = Estimated result < PQL and ≥ MDL
P = The RPD between two GC columns exceeds 40%
Where applicable, all soil sample analysis are reported on a dry weight basis unless flagged with a "W"
N = Recovery is out of criteria
H = Out of holding time

Volatile Organic Compounds by GC/MS

Client: **ARCADIS U.S., Inc.**
Laboratory ID: **LC17068-014**
Description: **F39SB012 (3.0-3.5)**
Matrix: **Solid**
Date Sampled: **03/16/2010 1015**
% Solids: **87.9** **03/17/2010 2329**
Date Received: **03/17/2010**

Run	Prep Method	Analytical Method	Dilution	Analysis Date	Analyst	Prep Date	Batch	Sample Wt.(g)
1	5035	8260B	1	03/20/2010 2230	DLB		29863	6.73

Parameter	CAS Number	Analytical Method	Result	Q	PQL	MDL	Units	Run
Acetone	**67-64-1**	**8260B**	**13**	**J**	**17**	**5.7**	**ug/kg**	**1**
Benzene	71-43-2	8260B	ND		4.2	0.93	ug/kg	1
Bromodichloromethane	75-27-4	8260B	ND		4.2	1.4	ug/kg	1
Bromoform	75-25-2	8260B	ND		4.2	0.59	ug/kg	1
Bromomethane (Methyl bromide)	74-83-9	8260B	ND		4.2	1.5	ug/kg	1
2-Butanone (MEK)	78-93-3	8260B	ND		8.4	2.0	ug/kg	1
Carbon disulfide	75-15-0	8260B	ND		4.2	1.1	ug/kg	1
Carbon tetrachloride	56-23-5	8260B	ND		4.2	1.5	ug/kg	1
Chlorobenzene	108-90-7	8260B	ND		4.2	1.4	ug/kg	1
Chloroethane	75-00-3	8260B	ND		4.2	1.1	ug/kg	1
Chloroform	67-66-3	8260B	ND		4.2	0.70	ug/kg	1
Chloromethane (Methyl chloride)	74-87-3	8260B	ND		4.2	0.84	ug/kg	1
Cyclohexane	110-82-7	8260B	ND		4.2	0.57	ug/kg	1
1,2-Dibromo-3-chloropropane (DBCP)	96-12-8	8260B	ND		4.2	1.3	ug/kg	1
Dibromochloromethane	124-48-1	8260B	ND		4.2	1.4	ug/kg	1
1,2-Dibromoethane (EDB)	106-93-4	8260B	ND		4.2	0.72	ug/kg	1
1,2-Dichlorobenzene	95-50-1	8260B	ND		4.2	1.4	ug/kg	1
1,3-Dichlorobenzene	541-73-1	8260B	ND		4.2	1.4	ug/kg	1
1,4-Dichlorobenzene	106-46-7	8260B	ND		4.2	1.4	ug/kg	1
Dichlorodifluoromethane	75-71-8	8260B	ND		4.2	1.4	ug/kg	1
1,1-Dichloroethane	75-34-3	8260B	ND		4.2	0.62	ug/kg	1
1,2-Dichloroethane	107-06-2	8260B	ND		4.2	0.84	ug/kg	1
1,1-Dichloroethene	75-35-4	8260B	ND		4.2	1.4	ug/kg	1
cis-1,2-Dichloroethene	156-59-2	8260B	ND		4.2	0.64	ug/kg	1
trans-1,2-Dichloroethene	156-60-5	8260B	ND		4.2	1.3	ug/kg	1
1,2-Dichloropropane	78-87-5	8260B	ND		4.2	0.77	ug/kg	1
cis-1,3-Dichloropropene	10061-01-5	8260B	ND		4.2	0.57	ug/kg	1
trans-1,3-Dichloropropene	10061-02-6	8260B	ND		4.2	0.69	ug/kg	1
Ethylbenzene	100-41-4	8260B	ND		4.2	1.4	ug/kg	1
2-Hexanone	591-78-6	8260B	ND		8.4	1.1	ug/kg	1
Isopropylbenzene	98-82-8	8260B	ND		4.2	0.68	ug/kg	1
Methyl acetate	79-20-9	8260B	ND		4.2	0.57	ug/kg	1
Methyl tertiary butyl ether (MTBE)	1634-04-4	8260B	ND		4.2	0.34	ug/kg	1
4-Methyl-2-pentanone	108-10-1	8260B	ND		8.4	1.3	ug/kg	1
Methylcyclohexane	108-87-2	8260B	ND		4.2	0.52	ug/kg	1
Methylene chloride	75-09-2	8260B	ND		4.2	2.2	ug/kg	1
Styrene	100-42-5	8260B	ND		4.2	0.93	ug/kg	1
1,1,2,2-Tetrachloroethane	79-34-5	8260B	ND		4.2	0.40	ug/kg	1
Tetrachloroethene	127-18-4	8260B	ND		4.2	1.9	ug/kg	1
Toluene	108-88-3	8260B	ND		4.2	1.4	ug/kg	1
1,1,2-Trichloro-1,2,2-Trifluoroethane	76-13-1	8260B	ND		4.2	1.8	ug/kg	1
1,2,4-Trichlorobenzene	120-82-1	8260B	ND		4.2	1.4	ug/kg	1
1,1,1-Trichloroethane	71-55-6	8260B	ND		4.2	0.72	ug/kg	1
1,1,2-Trichloroethane	79-00-5	8260B	ND		4.2	0.67	ug/kg	1

PQL = Practical quantitation limit
B = Detected in the method blank
E = Quantitation of compound exceeded the calibration range
ND = Not detected at or above the MDL
J = Estimated result < PQL and ≥ MDL
P = The RPD between two GC columns exceeds 40%
Where applicable, all soil sample analysis are reported on a dry weight basis unless flagged with a "W"
N = Recovery is out of criteria
H = Out of holding time

Volatile Organic Compounds by GC/MS

Client: **ARCADIS U.S., Inc.**
Laboratory ID: **LC17068-014**
Description: **F39SB012 (3.0-3.5)**
Matrix: **Solid**
Date Sampled: **03/16/2010 1015**
% Solids: **87.9** **03/17/2010 2329**
Date Received: **03/17/2010**

Run	Prep Method	Analytical Method	Dilution	Analysis Date	Analyst	Prep Date	Batch	Sample Wt.(g)
1	5035	8260B	1	03/20/2010 2230	DLB		29863	6.73

Parameter	CAS Number	Analytical Method	Result	Q	PQL	MDL	Units	Run
Trichloroethene	79-01-6	8260B	ND		4.2	1.6	ug/kg	1
Trichlorofluoromethane	75-69-4	8260B	ND		4.2	1.3	ug/kg	1
Vinyl chloride	75-01-4	8260B	ND		4.2	0.73	ug/kg	1
Xylenes (total)	1330-20-7	8260B	ND		4.2	2.4	ug/kg	1

Surrogate	Q	Run 1 % Recovery	Acceptance Limits
1,2-Dichloroethane-d4		95	53-142
Bromofluorobenzene		97	47-138
Toluene-d8		98	68-124

PQL = Practical quantitation limit
B = Detected in the method blank
E = Quantitation of compound exceeded the calibration range
ND = Not detected at or above the MDL
J = Estimated result < PQL and ≥ MDL
P = The RPD between two GC columns exceeds 40%
Where applicable, all soil sample analysis are reported on a dry weight basis unless flagged with a "W"
N = Recovery is out of criteria
H = Out of holding time

Semivolatile Organic Compounds by GC/MS

Client: **ARCADIS U.S., Inc.**
Laboratory ID: **LC17068-014**
Description: **F39SB012 (3.0-3.5)**
Matrix: **Solid**
Date Sampled: **03/16/2010 1015**
% Solids: **87.9** **03/17/2010 2329**
Date Received: **03/17/2010**

Run	Prep Method	Analytical Method	Dilution	Analysis Date	Analyst	Prep Date	Batch
1	3550C	8270D	1	03/22/2010 2121	WD	03/19/2010 1000	29722

Parameter	CAS Number	Analytical Method	Result	Q	PQL	MDL	Units	Run
Acenaphthene	83-32-9	8270D	ND		75	12	ug/kg	1
Acenaphthylene	208-96-8	8270D	ND		75	12	ug/kg	1
Acetophenone	98-86-2	8270D	ND		75	20	ug/kg	1
Anthracene	120-12-7	8270D	ND		75	8.3	ug/kg	1
Atrazine	1912-24-9	8270D	ND		75	19	ug/kg	1
Benzaldehyde	100-52-7	8270D	ND		75	19	ug/kg	1
Benzo(a)anthracene	56-55-3	8270D	ND		75	9.9	ug/kg	1
Benzo(a)pyrene	50-32-8	8270D	ND		75	10	ug/kg	1
Benzo(b)fluoranthene	205-99-2	8270D	ND		75	11	ug/kg	1
Benzo(g,h,i)perylene	191-24-2	8270D	ND		75	13	ug/kg	1
Benzo(k)fluoranthene	207-08-9	8270D	ND		75	11	ug/kg	1
1,1'-Biphenyl	92-52-4	8270D	ND		75	11	ug/kg	1
4-Bromophenyl phenyl ether	101-55-3	8270D	ND		75	11	ug/kg	1
Butyl benzyl phthalate	85-68-7	8270D	ND		150	50	ug/kg	1
Caprolactam	105-60-2	8270D	ND		75	19	ug/kg	1
Carbazole	86-74-8	8270D	ND		75	16	ug/kg	1
4-Chloro-3-methyl phenol	59-50-7	8270D	ND		75	9.5	ug/kg	1
4-Chloroaniline	106-47-8	8270D	ND		75	7.6	ug/kg	1
bis(2-Chloroethoxy)methane	111-91-1	8270D	ND		75	11	ug/kg	1
bis(2-Chloroethyl)ether	111-44-4	8270D	ND		75	10	ug/kg	1
bis(2-Chloroisopropyl)ether	108-60-1	8270D	ND		75	12	ug/kg	1
2-Chloronaphthalene	91-58-7	8270D	ND		75	12	ug/kg	1
2-Chlorophenol	95-57-8	8270D	ND		75	10	ug/kg	1
4-Chlorophenyl phenyl ether	7005-72-3	8270D	ND		75	13	ug/kg	1
Chrysene	218-01-9	8270D	ND		75	12	ug/kg	1
Dibenzo(a,h)anthracene	53-70-3	8270D	ND		75	10	ug/kg	1
Dibenzofuran	132-64-9	8270D	ND		75	12	ug/kg	1
3,3'-Dichlorobenzidine	91-94-1	8270D	ND		370	41	ug/kg	1
2,4-Dichlorophenol	120-83-2	8270D	ND		75	12	ug/kg	1
Diethylphthalate	84-66-2	8270D	ND		75	25	ug/kg	1
Dimethyl phthalate	131-11-3	8270D	ND		75	25	ug/kg	1
2,4-Dimethylphenol	105-67-9	8270D	ND		75	14	ug/kg	1
Di-n-butyl phthalate	84-74-2	8270D	ND		75	25	ug/kg	1
4,6-Dinitro-2-methylphenol	534-52-1	8270D	ND		370	150	ug/kg	1
2,4-Dinitrophenol	51-28-5	8270D	ND		370	130	ug/kg	1
2,4-Dinitrotoluene	121-14-2	8270D	ND		150	20	ug/kg	1
2,6-Dinitrotoluene	606-20-2	8270D	ND		150	19	ug/kg	1
Di-n-octylphthalate	117-84-0	8270D	ND		75	36	ug/kg	1
bis(2-Ethylhexyl)phthalate	117-81-7	8270D	ND		75	25	ug/kg	1
Fluoranthene	206-44-0	8270D	ND		75	12	ug/kg	1
Fluorene	86-73-7	8270D	ND		75	10	ug/kg	1
Hexachlorobenzene	118-74-1	8270D	ND		75	17	ug/kg	1
Hexachlorobutadiene	87-68-3	8270D	ND		75	12	ug/kg	1
Hexachlorocyclopentadiene	77-47-4	8270D	ND		370	28	ug/kg	1

PQL = Practical quantitation limit
B = Detected in the method blank
E = Quantitation of compound exceeded the calibration range
ND = Not detected at or above the MDL
J = Estimated result < PQL and ≥ MDL
P = The RPD between two GC columns exceeds 40%
Where applicable, all soil sample analysis are reported on a dry weight basis unless flagged with a "W"
N = Recovery is out of criteria
H = Out of holding time

Semivolatile Organic Compounds by GC/MS

Client: **ARCADIS U.S., Inc.**
Laboratory ID: **LC17068-014**
Description: **F39SB012 (3.0-3.5)**
Matrix: **Solid**
Date Sampled: **03/16/2010 1015**
% Solids: **87.9** **03/17/2010 2329**
Date Received: **03/17/2010**

Run	Prep Method	Analytical Method	Dilution	Analysis Date	Analyst	Prep Date	Batch
1	3550C	8270D	1	03/22/2010 2121	WD	03/19/2010 1000	29722

Parameter	CAS Number	Analytical Method	Result	Q	PQL	MDL	Units	Run
Hexachloroethane	67-72-1	8270D	ND		75	10	ug/kg	1
Indeno(1,2,3-c,d)pyrene	193-39-5	8270D	ND		75	11	ug/kg	1
Isophorone	78-59-1	8270D	ND		75	8.3	ug/kg	1
2-Methylnaphthalene	91-57-6	8270D	ND		75	11	ug/kg	1
2-Methylphenol	95-48-7	8270D	ND		75	6.8	ug/kg	1
3 & 4-Methylphenol	106-44-5	8270D	ND		150	13	ug/kg	1
Naphthalene	91-20-3	8270D	ND		75	11	ug/kg	1
2-Nitroaniline	88-74-4	8270D	ND		150	26	ug/kg	1
3-Nitroaniline	99-09-2	8270D	ND		150	44	ug/kg	1
4-Nitroaniline	100-01-6	8270D	ND		150	21	ug/kg	1
Nitrobenzene	98-95-3	8270D	ND		75	6.0	ug/kg	1
2-Nitrophenol	88-75-5	8270D	ND		150	21	ug/kg	1
4-Nitrophenol	100-02-7	8270D	ND		370	110	ug/kg	1
N-Nitrosodi-n-propylamine	621-64-7	8270D	ND		75	14	ug/kg	1
N-Nitrosodiphenylamine (Diphenylamine)	86-30-6	8270D	ND		75	9.3	ug/kg	1
Pentachlorophenol	87-86-5	8270D	ND		370	160	ug/kg	1
Phenanthrene	85-01-8	8270D	ND		75	10	ug/kg	1
Phenol	108-95-2	8270D	ND		75	10	ug/kg	1
Pyrene	129-00-0	8270D	ND		75	15	ug/kg	1
2,4,5-Trichlorophenol	95-95-4	8270D	ND		75	11	ug/kg	1
2,4,6-Trichlorophenol	88-06-2	8270D	ND		75	11	ug/kg	1

Surrogate	Q	Run 1 % Recovery	Acceptance Limits
2-Fluorobiphenyl		67	33-102
2-Fluorophenol		62	28-104
Nitrobenzene-d5		55	22-109
Phenol-d5		66	27-103
Terphenyl-d14		77	41-120
2,4,6-Tribromophenol		85	30-117

PQL = Practical quantitation limit
B = Detected in the method blank
E = Quantitation of compound exceeded the calibration range
ND = Not detected at or above the MDL
J = Estimated result < PQL and ≥ MDL
P = The RPD between two GC columns exceeds 40%
Where applicable, all soil sample analysis are reported on a dry weight basis unless flagged with a "W"
N = Recovery is out of criteria
H = Out of holding time

RCRA Metals

Client: **ARCADIS U.S., Inc.**
Laboratory ID: **LC17068-014**
Description: **F39SB012 (3.0-3.5)**
Matrix: **Solid**
Date Sampled: **03/16/2010 1015**
% Solids: **87.9** **03/17/2010 2329**
Date Received: **03/17/2010**

Run	Prep Method	Analytical Method	Dilution	Analysis Date	Analyst	Prep Date	Batch
1		7471B	1	03/23/2010 0018	BNW	03/22/2010 2050	29905
1	3050B	6010C	1	03/24/2010 0017	CDF	03/22/2010 1730	29899

Parameter	CAS Number	Analytical Method	Result	Q	PQL	MDL	Units	Run
Arsenic	7440-38-2	6010C	ND		0.56	0.21	mg/kg	1
Barium	**7440-39-3**	**6010C**	**19**		**1.5**	**0.10**	**mg/kg**	**1**
Cadmium	**7440-43-9**	**6010C**	**0.038**	**BJ**	**0.11**	**0.012**	**mg/kg**	**1**
Chromium	**7440-47-3**	**6010C**	**7.8**	**B**	**0.28**	**0.057**	**mg/kg**	**1**
Lead	**7439-92-1**	**6010C**	**7.5**		**0.56**	**0.10**	**mg/kg**	**1**
Mercury	**7439-97-6**	**7471B**	**0.096**		**0.090**	**0.0064**	**mg/kg**	**1**
Selenium	**7782-49-2**	**6010C**	**0.65**	**B**	**0.56**	**0.19**	**mg/kg**	**1**
Silver	7440-22-4	6010C	ND		0.28	0.047	mg/kg	1

PQL = Practical quantitation limit
B = Detected in the method blank
E = Quantitation of compound exceeded the calibration range
ND = Not detected at or above the MDL
J = Estimated result < PQL and ≥ MDL
P = The RPD between two GC columns exceeds 40%
Where applicable, all soil sample analysis are reported on a dry weight basis unless flagged with a "W"
N = Recovery is out of criteria
H = Out of holding time

Volatile Organic Compounds by GC/MS

Client: **ARCADIS U.S., Inc.**
Laboratory ID: **LC17068-015**
Description: **TRIP BLANK (031610)**
Matrix: **Aqueous**
Date Sampled: **03/17/2010 0900**
Date Received: **03/17/2010**

Run	Prep Method	Analytical Method	Dilution	Analysis Date	Analyst	Prep Date	Batch
1	5030B	8260B	1	03/20/2010 0035	DLB		29887

Parameter	CAS Number	Analytical Method	Result	Q	PQL	MDL	Units	Run
Acetone	67-64-1	8260B	ND		10	0.061	ug/L	1
Benzene	71-43-2	8260B	ND		0.50	0.027	ug/L	1
Bromodichloromethane	75-27-4	8260B	ND		0.50	0.17	ug/L	1
Bromoform	75-25-2	8260B	ND		0.50	0.010	ug/L	1
Bromomethane (Methyl bromide)	74-83-9	8260B	ND		0.50	0.20	ug/L	1
2-Butanone (MEK)	78-93-3	8260B	ND		10	2.0	ug/L	1
Carbon disulfide	75-15-0	8260B	ND		0.50	0.097	ug/L	1
Carbon tetrachloride	56-23-5	8260B	ND		0.50	0.085	ug/L	1
Chlorobenzene	108-90-7	8260B	ND		0.50	0.17	ug/L	1
Chloroethane	75-00-3	8260B	ND		0.50	0.17	ug/L	1
Chloroform	67-66-3	8260B	ND		0.50	0.17	ug/L	1
Chloromethane (Methyl chloride)	74-87-3	8260B	ND		0.50	0.17	ug/L	1
Cyclohexane	110-82-7	8260B	ND		0.50	0.30	ug/L	1
1,2-Dibromo-3-chloropropane (DBCP)	96-12-8	8260B	ND		0.50	0.069	ug/L	1
Dibromochloromethane	124-48-1	8260B	ND		0.50	0.17	ug/L	1
1,2-Dibromoethane (EDB)	106-93-4	8260B	ND		0.50	0.061	ug/L	1
1,3-Dichlorobenzene	541-73-1	8260B	ND		0.50	0.17	ug/L	1
1,2-Dichlorobenzene	95-50-1	8260B	ND		0.50	0.17	ug/L	1
1,4-Dichlorobenzene	106-46-7	8260B	ND		0.50	0.17	ug/L	1
Dichlorodifluoromethane	75-71-8	8260B	ND		0.50	0.071	ug/L	1
1,1-Dichloroethane	75-34-3	8260B	ND		0.50	0.054	ug/L	1
1,2-Dichloroethane	107-06-2	8260B	ND		0.50	0.023	ug/L	1
trans-1,2-Dichloroethene	156-60-5	8260B	ND		0.50	0.079	ug/L	1
1,1-Dichloroethene	75-35-4	8260B	ND		0.50	0.094	ug/L	1
cis-1,2-Dichloroethene	156-59-2	8260B	ND		0.50	0.087	ug/L	1
1,2-Dichloropropane	78-87-5	8260B	ND		0.50	0.081	ug/L	1
trans-1,3-Dichloropropene	10061-02-6	8260B	ND		0.50	0.18	ug/L	1
cis-1,3-Dichloropropene	10061-01-5	8260B	ND		0.50	0.090	ug/L	1
Ethylbenzene	100-41-4	8260B	ND		0.50	0.17	ug/L	1
2-Hexanone	591-78-6	8260B	ND		10	0.27	ug/L	1
Isopropylbenzene	98-82-8	8260B	ND		0.50	0.029	ug/L	1
Methyl acetate	79-20-9	8260B	ND		1.0	0.30	ug/L	1
Methyl tertiary butyl ether (MTBE)	1634-04-4	8260B	ND		0.50	0.019	ug/L	1
4-Methyl-2-pentanone	108-10-1	8260B	ND		10	0.31	ug/L	1
Methylcyclohexane	108-87-2	8260B	ND		5.0	0.95	ug/L	1
Methylene chloride	75-09-2	8260B	ND		0.50	0.17	ug/L	1
Styrene	100-42-5	8260B	ND		0.50	0.015	ug/L	1
1,1,2,2-Tetrachloroethane	79-34-5	8260B	ND		0.50	0.013	ug/L	1
Tetrachloroethene	127-18-4	8260B	ND		0.50	0.014	ug/L	1
Toluene	108-88-3	8260B	ND		0.50	0.17	ug/L	1
1,1,2-Trichloro-1,2,2-Trifluoroethane	76-13-1	8260B	ND		0.50	0.30	ug/L	1
1,2,4-Trichlorobenzene	120-82-1	8260B	ND		0.50	0.17	ug/L	1
1,1,1-Trichloroethane	71-55-6	8260B	ND		0.50	0.029	ug/L	1
1,1,2-Trichloroethane	79-00-5	8260B	ND		0.50	0.031	ug/L	1

PQL = Practical quantitation limit
B = Detected in the method blank
E = Quantitation of compound exceeded the calibration range
ND = Not detected at or above the MDL
J = Estimated result < PQL and ≥ MDL
P = The RPD between two GC columns exceeds 40%
Where applicable, all soil sample analysis are reported on a dry weight basis unless flagged with a "W"
N = Recovery is out of criteria
H = Out of holding time

Volatile Organic Compounds by GC/MS

Client: **ARCADIS U.S., Inc.**
Laboratory ID: **LC17068-015**
Description: **TRIP BLANK (031610)**
Matrix: **Aqueous**
Date Sampled: **03/17/2010 0900**
Date Received: **03/17/2010**

Run	Prep Method	Analytical Method	Dilution	Analysis Date	Analyst	Prep Date	Batch
1	5030B	8260B	1	03/20/2010 0035	DLB		29887

Parameter	CAS Number	Analytical Method	Result	Q	PQL	MDL	Units	Run
Trichloroethene	79-01-6	8260B	ND		0.50	0.024	ug/L	1
Trichlorofluoromethane	75-69-4	8260B	ND		0.50	0.051	ug/L	1
Vinyl chloride	75-01-4	8260B	ND		0.50	0.065	ug/L	1
Xylenes (total)	1330-20-7	8260B	ND		0.50	0.17	ug/L	1

Surrogate	Q	Run 1 % Recovery	Acceptance Limits
1,2-Dichloroethane-d4		94	70-130
Bromofluorobenzene		98	70-130
Toluene-d8		112	70-130

PQL = Practical quantitation limit
B = Detected in the method blank
E = Quantitation of compound exceeded the calibration range
ND = Not detected at or above the MDL
J = Estimated result < PQL and ≥ MDL
P = The RPD between two GC columns exceeds 40%
Where applicable, all soil sample analysis are reported on a dry weight basis unless flagged with a "W"
N = Recovery is out of criteria
H = Out of holding time

Volatile Organic Compounds by GC/MS

Client: **ARCADIS U.S., Inc.**
Laboratory ID: **LC17068-016**
Description: **DUP-2**
Matrix: **Solid**
Date Sampled: **03/18/2010 0700**
% Solids: **85.8** **03/20/2010 0010**
Date Received: **03/19/2010**

Run	Prep Method	Analytical Method	Dilution	Analysis Date	Analyst	Prep Date	Batch	Sample Wt.(g)
1	5035	8260B	1	03/23/2010 0330	RRH		30086	6.19

Parameter	CAS Number	Analytical Method	Result	Q	PQL	MDL	Units	Run
Acetone	**67-64-1**	**8260B**	**19**		**19**	**6.3**	**ug/kg**	**1**
Benzene	71-43-2	8260B	ND		4.7	1.0	ug/kg	1
Bromodichloromethane	75-27-4	8260B	ND		4.7	1.6	ug/kg	1
Bromoform	75-25-2	8260B	ND		4.7	0.66	ug/kg	1
Bromomethane (Methyl bromide)	74-83-9	8260B	ND		4.7	1.7	ug/kg	1
2-Butanone (MEK)	78-93-3	8260B	ND		9.4	2.3	ug/kg	1
Carbon disulfide	75-15-0	8260B	ND		4.7	1.2	ug/kg	1
Carbon tetrachloride	56-23-5	8260B	ND		4.7	1.7	ug/kg	1
Chlorobenzene	108-90-7	8260B	ND		4.7	1.6	ug/kg	1
Chloroethane	75-00-3	8260B	ND		4.7	1.2	ug/kg	1
Chloroform	67-66-3	8260B	ND		4.7	0.78	ug/kg	1
Chloromethane (Methyl chloride)	74-87-3	8260B	ND		4.7	0.94	ug/kg	1
Cyclohexane	110-82-7	8260B	ND		4.7	0.63	ug/kg	1
1,2-Dibromo-3-chloropropane (DBCP)	96-12-8	8260B	ND		4.7	1.4	ug/kg	1
Dibromochloromethane	124-48-1	8260B	ND		4.7	1.6	ug/kg	1
1,2-Dibromoethane (EDB)	106-93-4	8260B	ND		4.7	0.80	ug/kg	1
1,2-Dichlorobenzene	95-50-1	8260B	ND		4.7	1.6	ug/kg	1
1,3-Dichlorobenzene	541-73-1	8260B	ND		4.7	1.6	ug/kg	1
1,4-Dichlorobenzene	106-46-7	8260B	ND		4.7	1.6	ug/kg	1
Dichlorodifluoromethane	75-71-8	8260B	ND		4.7	1.5	ug/kg	1
1,1-Dichloroethane	75-34-3	8260B	ND		4.7	0.69	ug/kg	1
1,2-Dichloroethane	107-06-2	8260B	ND		4.7	0.94	ug/kg	1
1,1-Dichloroethene	75-35-4	8260B	ND		4.7	1.6	ug/kg	1
cis-1,2-Dichloroethene	156-59-2	8260B	ND		4.7	0.72	ug/kg	1
trans-1,2-Dichloroethene	156-60-5	8260B	ND		4.7	1.4	ug/kg	1
1,2-Dichloropropane	78-87-5	8260B	ND		4.7	0.86	ug/kg	1
cis-1,3-Dichloropropene	10061-01-5	8260B	ND		4.7	0.64	ug/kg	1
trans-1,3-Dichloropropene	10061-02-6	8260B	ND		4.7	0.77	ug/kg	1
Ethylbenzene	100-41-4	8260B	ND		4.7	1.6	ug/kg	1
2-Hexanone	591-78-6	8260B	ND		9.4	1.2	ug/kg	1
Isopropylbenzene	98-82-8	8260B	ND		4.7	0.75	ug/kg	1
Methyl acetate	79-20-9	8260B	ND		4.7	0.63	ug/kg	1
Methyl tertiary butyl ether (MTBE)	1634-04-4	8260B	ND		4.7	0.38	ug/kg	1
4-Methyl-2-pentanone	108-10-1	8260B	ND		9.4	1.4	ug/kg	1
Methylcyclohexane	108-87-2	8260B	ND		4.7	0.57	ug/kg	1
Methylene chloride	75-09-2	8260B	ND		4.7	2.4	ug/kg	1
Styrene	100-42-5	8260B	ND		4.7	1.0	ug/kg	1
1,1,2,2-Tetrachloroethane	79-34-5	8260B	ND		4.7	0.44	ug/kg	1
Tetrachloroethene	127-18-4	8260B	ND		4.7	2.2	ug/kg	1
Toluene	108-88-3	8260B	ND		4.7	1.6	ug/kg	1
1,1,2-Trichloro-1,2,2-Trifluoroethane	76-13-1	8260B	ND		4.7	2.0	ug/kg	1
1,2,4-Trichlorobenzene	120-82-1	8260B	ND		4.7	1.6	ug/kg	1
1,1,1-Trichloroethane	71-55-6	8260B	ND		4.7	0.80	ug/kg	1
1,1,2-Trichloroethane	79-00-5	8260B	ND		4.7	0.74	ug/kg	1

PQL = Practical quantitation limit
B = Detected in the method blank
E = Quantitation of compound exceeded the calibration range
ND = Not detected at or above the MDL
J = Estimated result < PQL and ≥ MDL
P = The RPD between two GC columns exceeds 40%
Where applicable, all soil sample analysis are reported on a dry weight basis unless flagged with a "W"
N = Recovery is out of criteria
H = Out of holding time

Volatile Organic Compounds by GC/MS

Client:	**ARCADIS U.S., Inc.**	Laboratory ID:	**LC17068-016**
Description:	**DUP-2**	Matrix:	**Solid**
Date Sampled:	**03/18/2010 0700**	% Solids:	**85.8 03/20/2010 0010**
Date Received:	**03/19/2010**		

Run	Prep Method	Analytical Method	Dilution	Analysis Date	Analyst	Prep Date	Batch	Sample Wt.(g)
1	5035	8260B	1	03/23/2010 0330	RRH		30086	6.19

Parameter	CAS Number	Analytical Method	Result	Q	PQL	MDL	Units	Run
Trichloroethene	79-01-6	8260B	ND		4.7	1.8	ug/kg	1
Trichlorofluoromethane	75-69-4	8260B	ND		4.7	1.4	ug/kg	1
Vinyl chloride	75-01-4	8260B	ND		4.7	0.81	ug/kg	1
Xylenes (total)	1330-20-7	8260B	ND		4.7	2.7	ug/kg	1

Surrogate	Q	Run 1 % Recovery	Acceptance Limits
1,2-Dichloroethane-d4		89	53-142
Bromofluorobenzene		94	47-138
Toluene-d8		105	68-124

PQL = Practical quantitation limit
ND = Not detected at or above the MDL
Where applicable, all soil sample analysis are reported on a dry weight basis unless flagged with a "W"
B = Detected in the method blank
J = Estimated result < PQL and ≥ MDL
E = Quantitation of compound exceeded the calibration range
P = The RPD between two GC columns exceeds 40%
N = Recovery is out of criteria
H = Out of holding time

Semivolatile Organic Compounds by GC/MS

Client: **ARCADIS U.S., Inc.**
Laboratory ID: **LC17068-016**
Description: **DUP-2**
Matrix: **Solid**
Date Sampled: **03/18/2010 0700**
% Solids: **85.8** **03/20/2010 0010**
Date Received: **03/19/2010**

Run	Prep Method	Analytical Method	Dilution	Analysis Date	Analyst	Prep Date	Batch
1	3550C	8270D	2	03/25/2010 1318	WD	03/22/2010 1634	29896

Parameter	CAS Number	Analytical Method	Result	Q	PQL	MDL	Units	Run
Acenaphthene	83-32-9	8270D	ND		150	24	ug/kg	1
Acenaphthylene	208-96-8	8270D	ND		150	23	ug/kg	1
Acetophenone	98-86-2	8270D	ND		150	41	ug/kg	1
Anthracene	120-12-7	8270D	ND		150	17	ug/kg	1
Atrazine	1912-24-9	8270D	ND		150	38	ug/kg	1
Benzaldehyde	100-52-7	8270D	ND		150	38	ug/kg	1
Benzo(a)anthracene	56-55-3	8270D	ND		150	20	ug/kg	1
Benzo(a)pyrene	50-32-8	8270D	ND		150	21	ug/kg	1
Benzo(b)fluoranthene	205-99-2	8270D	ND		150	22	ug/kg	1
Benzo(g,h,i)perylene	191-24-2	8270D	ND		150	26	ug/kg	1
Benzo(k)fluoranthene	207-08-9	8270D	ND		150	21	ug/kg	1
1,1'-Biphenyl	92-52-4	8270D	ND		150	23	ug/kg	1
4-Bromophenyl phenyl ether	101-55-3	8270D	ND		150	22	ug/kg	1
Butyl benzyl phthalate	85-68-7	8270D	ND		290	99	ug/kg	1
Caprolactam	105-60-2	8270D	ND		150	38	ug/kg	1
Carbazole	86-74-8	8270D	ND		150	32	ug/kg	1
4-Chloro-3-methyl phenol	59-50-7	8270D	ND		150	19	ug/kg	1
4-Chloroaniline	106-47-8	8270D	ND		150	15	ug/kg	1
bis(2-Chloroethoxy)methane	111-91-1	8270D	ND		150	23	ug/kg	1
bis(2-Chloroethyl)ether	111-44-4	8270D	ND		150	21	ug/kg	1
bis(2-Chloroisopropyl)ether	108-60-1	8270D	ND		150	25	ug/kg	1
2-Chloronaphthalene	91-58-7	8270D	ND		150	25	ug/kg	1
2-Chlorophenol	95-57-8	8270D	ND		150	21	ug/kg	1
4-Chlorophenyl phenyl ether	7005-72-3	8270D	ND		150	26	ug/kg	1
Chrysene	218-01-9	8270D	ND		150	25	ug/kg	1
Dibenzo(a,h)anthracene	53-70-3	8270D	ND		150	20	ug/kg	1
Dibenzofuran	132-64-9	8270D	ND		150	24	ug/kg	1
3,3'-Dichlorobenzidine	91-94-1	8270D	ND		740	82	ug/kg	1
2,4-Dichlorophenol	120-83-2	8270D	ND		150	23	ug/kg	1
Diethylphthalate	84-66-2	8270D	ND		150	50	ug/kg	1
Dimethyl phthalate	131-11-3	8270D	ND		150	50	ug/kg	1
2,4-Dimethylphenol	105-67-9	8270D	ND		150	28	ug/kg	1
Di-n-butyl phthalate	84-74-2	8270D	ND		150	50	ug/kg	1
4,6-Dinitro-2-methylphenol	534-52-1	8270D	ND		740	290	ug/kg	1
2,4-Dinitrophenol	51-28-5	8270D	ND		740	250	ug/kg	1
2,4-Dinitrotoluene	121-14-2	8270D	ND		290	41	ug/kg	1
2,6-Dinitrotoluene	606-20-2	8270D	ND		290	39	ug/kg	1
Di-n-octylphthalate	117-84-0	8270D	ND		150	72	ug/kg	1
bis(2-Ethylhexyl)phthalate	117-81-7	8270D	ND		150	50	ug/kg	1
Fluoranthene	206-44-0	8270D	ND		150	24	ug/kg	1
Fluorene	86-73-7	8270D	ND		150	20	ug/kg	1
Hexachlorobenzene	118-74-1	8270D	ND		150	33	ug/kg	1
Hexachlorobutadiene	87-68-3	8270D	ND		150	25	ug/kg	1
Hexachlorocyclopentadiene	77-47-4	8270D	ND		740	55	ug/kg	1

PQL = Practical quantitation limit
B = Detected in the method blank
E = Quantitation of compound exceeded the calibration range
ND = Not detected at or above the MDL
J = Estimated result < PQL and ≥ MDL
P = The RPD between two GC columns exceeds 40%
Where applicable, all soil sample analysis are reported on a dry weight basis unless flagged with a "W"
N = Recovery is out of criteria
H = Out of holding time

Semivolatile Organic Compounds by GC/MS

Client: **ARCADIS U.S., Inc.**
Laboratory ID: **LC17068-016**
Description: **DUP-2**
Matrix: **Solid**
Date Sampled: **03/18/2010 0700**
% Solids: **85.8** **03/20/2010 0010**
Date Received: **03/19/2010**

Run	Prep Method	Analytical Method	Dilution	Analysis Date	Analyst	Prep Date	Batch
1	3550C	8270D	2	03/25/2010 1318	WD	03/22/2010 1634	29896

Parameter	CAS Number	Analytical Method	Result	Q	PQL	MDL	Units	Run
Hexachloroethane	67-72-1	8270D	ND		150	20	ug/kg	1
Indeno(1,2,3-c,d)pyrene	193-39-5	8270D	ND		150	22	ug/kg	1
Isophorone	78-59-1	8270D	ND		150	17	ug/kg	1
2-Methylnaphthalene	91-57-6	8270D	ND		150	22	ug/kg	1
2-Methylphenol	95-48-7	8270D	ND		150	14	ug/kg	1
3 & 4-Methylphenol	106-44-5	8270D	ND		290	27	ug/kg	1
Naphthalene	91-20-3	8270D	ND		150	23	ug/kg	1
2-Nitroaniline	88-74-4	8270D	ND		290	51	ug/kg	1
3-Nitroaniline	99-09-2	8270D	ND		290	87	ug/kg	1
4-Nitroaniline	100-01-6	8270D	ND		290	43	ug/kg	1
Nitrobenzene	98-95-3	8270D	ND		150	12	ug/kg	1
2-Nitrophenol	88-75-5	8270D	ND		290	41	ug/kg	1
4-Nitrophenol	100-02-7	8270D	ND		740	220	ug/kg	1
N-Nitrosodi-n-propylamine	621-64-7	8270D	ND		150	29	ug/kg	1
N-Nitrosodiphenylamine (Diphenylamine)	86-30-6	8270D	ND		150	19	ug/kg	1
Pentachlorophenol	87-86-5	8270D	ND		740	310	ug/kg	1
Phenanthrene	85-01-8	8270D	ND		150	20	ug/kg	1
Phenol	108-95-2	8270D	ND		150	20	ug/kg	1
Pyrene	129-00-0	8270D	ND		150	30	ug/kg	1
2,4,5-Trichlorophenol	95-95-4	8270D	ND		150	21	ug/kg	1
2,4,6-Trichlorophenol	88-06-2	8270D	ND		150	22	ug/kg	1

Surrogate	Q	Run 1 % Recovery	Acceptance Limits
2-Fluorobiphenyl		72	33-102
2-Fluorophenol		66	28-104
Nitrobenzene-d5		67	22-109
Phenol-d5		71	27-103
Terphenyl-d14		70	41-120
2,4,6-Tribromophenol		73	30-117

PQL = Practical quantitation limit
B = Detected in the method blank
E = Quantitation of compound exceeded the calibration range
ND = Not detected at or above the MDL
J = Estimated result < PQL and ≥ MDL
P = The RPD between two GC columns exceeds 40%
Where applicable, all soil sample analysis are reported on a dry weight basis unless flagged with a "W"
N = Recovery is out of criteria
H = Out of holding time

RCRA Metals

Client: **ARCADIS U.S., Inc.**
Laboratory ID: **LC17068-016**
Description: **DUP-2**
Matrix: **Solid**
Date Sampled: **03/18/2010 0700**
% Solids: **85.8** **03/20/2010 0010**
Date Received: **03/19/2010**

Run	Prep Method	Analytical Method	Dilution	Analysis Date	Analyst	Prep Date	Batch
1		7471B	1	03/23/2010 0020	BNW	03/22/2010 2050	29905
1	3050B	6010C	1	03/24/2010 0022	CDF	03/22/2010 1730	29899

Parameter	CAS Number	Analytical Method	Result	Q	PQL	MDL	Units	Run
Arsenic	7440-38-2	6010C	ND		0.57	0.21	mg/kg	1
Barium	**7440-39-3**	**6010C**	**6.7**		**1.5**	**0.10**	**mg/kg**	**1**
Cadmium	**7440-43-9**	**6010C**	**0.052**	**BJ**	**0.11**	**0.012**	**mg/kg**	**1**
Chromium	**7440-47-3**	**6010C**	**2.8**	**B**	**0.28**	**0.058**	**mg/kg**	**1**
Lead	**7439-92-1**	**6010C**	**3.9**		**0.57**	**0.11**	**mg/kg**	**1**
Mercury	**7439-97-6**	**7471B**	**0.020**	**J**	**0.086**	**0.0061**	**mg/kg**	**1**
Selenium	**7782-49-2**	**6010C**	**0.53**	**BJ**	**0.57**	**0.20**	**mg/kg**	**1**
Silver	7440-22-4	6010C	ND		0.28	0.048	mg/kg	1

PQL = Practical quantitation limit
B = Detected in the method blank
E = Quantitation of compound exceeded the calibration range
ND = Not detected at or above the MDL
J = Estimated result < PQL and ≥ MDL
P = The RPD between two GC columns exceeds 40%
Where applicable, all soil sample analysis are reported on a dry weight basis unless flagged with a "W"
N = Recovery is out of criteria
H = Out of holding time

Volatile Organic Compounds by GC/MS

Client: **ARCADIS U.S., Inc.**
Laboratory ID: **LC17068-017**
Description: **F39SB008 (4-5)**
Matrix: **Solid**
Date Sampled: **03/18/2010 0820**
% Solids: **87.0** **03/20/2010 0010**
Date Received: **03/19/2010**

Run	Prep Method	Analytical Method	Dilution	Analysis Date	Analyst	Prep Date	Batch	Sample Wt.(g)
1	5035	8260B	1	03/23/2010 0353	RRH		30086	6.11

Parameter	CAS Number	Analytical Method	Result	Q	PQL	MDL	Units	Run
Acetone	**67-64-1**	**8260B**	**31**		**19**	**6.3**	**ug/kg**	**1**
Benzene	71-43-2	8260B	ND		4.7	1.0	ug/kg	1
Bromodichloromethane	75-27-4	8260B	ND		4.7	1.6	ug/kg	1
Bromoform	75-25-2	8260B	ND		4.7	0.66	ug/kg	1
Bromomethane (Methyl bromide)	74-83-9	8260B	ND		4.7	1.7	ug/kg	1
2-Butanone (MEK)	78-93-3	8260B	ND		9.4	2.3	ug/kg	1
Carbon disulfide	75-15-0	8260B	ND		4.7	1.2	ug/kg	1
Carbon tetrachloride	56-23-5	8260B	ND		4.7	1.7	ug/kg	1
Chlorobenzene	108-90-7	8260B	ND		4.7	1.6	ug/kg	1
Chloroethane	75-00-3	8260B	ND		4.7	1.2	ug/kg	1
Chloroform	67-66-3	8260B	ND		4.7	0.78	ug/kg	1
Chloromethane (Methyl chloride)	74-87-3	8260B	ND		4.7	0.94	ug/kg	1
Cyclohexane	110-82-7	8260B	ND		4.7	0.63	ug/kg	1
1,2-Dibromo-3-chloropropane (DBCP)	96-12-8	8260B	ND		4.7	1.4	ug/kg	1
Dibromochloromethane	124-48-1	8260B	ND		4.7	1.6	ug/kg	1
1,2-Dibromoethane (EDB)	106-93-4	8260B	ND		4.7	0.80	ug/kg	1
1,2-Dichlorobenzene	95-50-1	8260B	ND		4.7	1.6	ug/kg	1
1,3-Dichlorobenzene	541-73-1	8260B	ND		4.7	1.6	ug/kg	1
1,4-Dichlorobenzene	106-46-7	8260B	ND		4.7	1.6	ug/kg	1
Dichlorodifluoromethane	75-71-8	8260B	ND		4.7	1.5	ug/kg	1
1,1-Dichloroethane	75-34-3	8260B	ND		4.7	0.69	ug/kg	1
1,2-Dichloroethane	107-06-2	8260B	ND		4.7	0.94	ug/kg	1
1,1-Dichloroethene	75-35-4	8260B	ND		4.7	1.6	ug/kg	1
cis-1,2-Dichloroethene	156-59-2	8260B	ND		4.7	0.72	ug/kg	1
trans-1,2-Dichloroethene	156-60-5	8260B	ND		4.7	1.4	ug/kg	1
1,2-Dichloropropane	78-87-5	8260B	ND		4.7	0.86	ug/kg	1
cis-1,3-Dichloropropene	10061-01-5	8260B	ND		4.7	0.64	ug/kg	1
trans-1,3-Dichloropropene	10061-02-6	8260B	ND		4.7	0.77	ug/kg	1
Ethylbenzene	100-41-4	8260B	ND		4.7	1.6	ug/kg	1
2-Hexanone	591-78-6	8260B	ND		9.4	1.2	ug/kg	1
Isopropylbenzene	98-82-8	8260B	ND		4.7	0.75	ug/kg	1
Methyl acetate	79-20-9	8260B	ND		4.7	0.63	ug/kg	1
Methyl tertiary butyl ether (MTBE)	1634-04-4	8260B	ND		4.7	0.38	ug/kg	1
4-Methyl-2-pentanone	108-10-1	8260B	ND		9.4	1.4	ug/kg	1
Methylcyclohexane	108-87-2	8260B	ND		4.7	0.57	ug/kg	1
Methylene chloride	75-09-2	8260B	ND		4.7	2.4	ug/kg	1
Styrene	100-42-5	8260B	ND		4.7	1.0	ug/kg	1
1,1,2,2-Tetrachloroethane	79-34-5	8260B	ND		4.7	0.44	ug/kg	1
Tetrachloroethene	127-18-4	8260B	ND		4.7	2.2	ug/kg	1
Toluene	108-88-3	8260B	ND		4.7	1.6	ug/kg	1
1,1,2-Trichloro-1,2,2-Trifluoroethane	76-13-1	8260B	ND		4.7	2.0	ug/kg	1
1,2,4-Trichlorobenzene	120-82-1	8260B	ND		4.7	1.6	ug/kg	1
1,1,1-Trichloroethane	71-55-6	8260B	ND		4.7	0.80	ug/kg	1
1,1,2-Trichloroethane	79-00-5	8260B	ND		4.7	0.74	ug/kg	1

PQL = Practical quantitation limit
B = Detected in the method blank
E = Quantitation of compound exceeded the calibration range
ND = Not detected at or above the MDL
J = Estimated result < PQL and ≥ MDL
P = The RPD between two GC columns exceeds 40%
Where applicable, all soil sample analysis are reported on a dry weight basis unless flagged with a "W"
N = Recovery is out of criteria
H = Out of holding time

Volatile Organic Compounds by GC/MS

Client: **ARCADIS U.S., Inc.**	Laboratory ID: **LC17068-017**
Description: **F39SB008 (4-5)**	Matrix: **Solid**
Date Sampled: **03/18/2010 0820**	% Solids: **87.0** **03/20/2010 0010**
Date Received: **03/19/2010**	

Run	Prep Method	Analytical Method	Dilution	Analysis Date	Analyst	Prep Date	Batch	Sample Wt.(g)
1	5035	8260B	1	03/23/2010 0353	RRH		30086	6.11

Parameter	CAS Number	Analytical Method	Result	Q	PQL	MDL	Units	Run
Trichloroethene	79-01-6	8260B	ND		4.7	1.8	ug/kg	1
Trichlorofluoromethane	75-69-4	8260B	ND		4.7	1.4	ug/kg	1
Vinyl chloride	75-01-4	8260B	ND		4.7	0.81	ug/kg	1
Xylenes (total)	1330-20-7	8260B	ND		4.7	2.7	ug/kg	1

Surrogate	Q	Run 1 % Recovery	Acceptance Limits
1,2-Dichloroethane-d4		77	53-142
Bromofluorobenzene		77	47-138
Toluene-d8		84	68-124

PQL = Practical quantitation limit
ND = Not detected at or above the MDL
Where applicable, all soil sample analysis are reported on a dry weight basis unless flagged with a "W"
B = Detected in the method blank
J = Estimated result < PQL and ≥ MDL
E = Quantitation of compound exceeded the calibration range
P = The RPD between two GC columns exceeds 40%
N = Recovery is out of criteria
H = Out of holding time

Semivolatile Organic Compounds by GC/MS

Client: **ARCADIS U.S., Inc.**
Laboratory ID: **LC17068-017**
Description: **F39SB008 (4-5)**
Matrix: **Solid**
Date Sampled: **03/18/2010 0820**
% Solids: **87.0** **03/20/2010 0010**
Date Received: **03/19/2010**

Run	Prep Method	Analytical Method	Dilution	Analysis Date	Analyst	Prep Date	Batch
1	3550C	8270D	2	03/25/2010 1338	WD	03/22/2010 1634	29896

Parameter	CAS Number	Analytical Method	Result	Q	PQL	MDL	Units	Run
Acenaphthene	83-32-9	8270D	ND		150	24	ug/kg	1
Acenaphthylene	208-96-8	8270D	ND		150	24	ug/kg	1
Acetophenone	98-86-2	8270D	ND		150	41	ug/kg	1
Anthracene	120-12-7	8270D	ND		150	17	ug/kg	1
Atrazine	1912-24-9	8270D	ND		150	39	ug/kg	1
Benzaldehyde	100-52-7	8270D	ND		150	39	ug/kg	1
Benzo(a)anthracene	56-55-3	8270D	ND		150	20	ug/kg	1
Benzo(a)pyrene	50-32-8	8270D	ND		150	21	ug/kg	1
Benzo(b)fluoranthene	205-99-2	8270D	ND		150	22	ug/kg	1
Benzo(g,h,i)perylene	191-24-2	8270D	ND		150	26	ug/kg	1
Benzo(k)fluoranthene	207-08-9	8270D	ND		150	22	ug/kg	1
1,1'-Biphenyl	92-52-4	8270D	ND		150	23	ug/kg	1
4-Bromophenyl phenyl ether	101-55-3	8270D	ND		150	22	ug/kg	1
Butyl benzyl phthalate	85-68-7	8270D	ND		290	100	ug/kg	1
Caprolactam	105-60-2	8270D	ND		150	39	ug/kg	1
Carbazole	86-74-8	8270D	ND		150	32	ug/kg	1
4-Chloro-3-methyl phenol	59-50-7	8270D	ND		150	19	ug/kg	1
4-Chloroaniline	106-47-8	8270D	ND		150	15	ug/kg	1
bis(2-Chloroethoxy)methane	111-91-1	8270D	ND		150	23	ug/kg	1
bis(2-Chloroethyl)ether	111-44-4	8270D	ND		150	21	ug/kg	1
bis(2-Chloroisopropyl)ether	108-60-1	8270D	ND		150	25	ug/kg	1
2-Chloronaphthalene	91-58-7	8270D	ND		150	25	ug/kg	1
2-Chlorophenol	95-57-8	8270D	ND		150	21	ug/kg	1
4-Chlorophenyl phenyl ether	7005-72-3	8270D	ND		150	26	ug/kg	1
Chrysene	218-01-9	8270D	ND		150	25	ug/kg	1
Dibenzo(a,h)anthracene	53-70-3	8270D	ND		150	21	ug/kg	1
Dibenzofuran	132-64-9	8270D	ND		150	24	ug/kg	1
3,3'-Dichlorobenzidine	91-94-1	8270D	ND		750	82	ug/kg	1
2,4-Dichlorophenol	120-83-2	8270D	ND		150	23	ug/kg	1
Diethylphthalate	84-66-2	8270D	ND		150	50	ug/kg	1
Dimethyl phthalate	131-11-3	8270D	ND		150	50	ug/kg	1
2,4-Dimethylphenol	105-67-9	8270D	ND		150	28	ug/kg	1
Di-n-butyl phthalate	84-74-2	8270D	ND		150	50	ug/kg	1
4,6-Dinitro-2-methylphenol	534-52-1	8270D	ND		750	290	ug/kg	1
2,4-Dinitrophenol	51-28-5	8270D	ND		750	260	ug/kg	1
2,4-Dinitrotoluene	121-14-2	8270D	ND		290	41	ug/kg	1
2,6-Dinitrotoluene	606-20-2	8270D	ND		290	39	ug/kg	1
Di-n-octylphthalate	117-84-0	8270D	ND		150	73	ug/kg	1
bis(2-Ethylhexyl)phthalate	117-81-7	8270D	ND		150	50	ug/kg	1
Fluoranthene	206-44-0	8270D	ND		150	24	ug/kg	1
Fluorene	86-73-7	8270D	ND		150	20	ug/kg	1
Hexachlorobenzene	118-74-1	8270D	ND		150	33	ug/kg	1
Hexachlorobutadiene	87-68-3	8270D	ND		150	25	ug/kg	1
Hexachlorocyclopentadiene	77-47-4	8270D	ND		750	56	ug/kg	1

PQL = Practical quantitation limit
B = Detected in the method blank
E = Quantitation of compound exceeded the calibration range
ND = Not detected at or above the MDL
J = Estimated result < PQL and ≥ MDL
P = The RPD between two GC columns exceeds 40%
Where applicable, all soil sample analysis are reported on a dry weight basis unless flagged with a "W"
N = Recovery is out of criteria
H = Out of holding time

Semivolatile Organic Compounds by GC/MS

Client: **ARCADIS U.S., Inc.**
Laboratory ID: **LC17068-017**
Description: **F39SB008 (4-5)**
Matrix: **Solid**
Date Sampled: **03/18/2010 0820**
% Solids: **87.0** **03/20/2010 0010**
Date Received: **03/19/2010**

Run	Prep Method	Analytical Method	Dilution	Analysis Date	Analyst	Prep Date	Batch
1	3550C	8270D	2	03/25/2010 1338	WD	03/22/2010 1634	29896

Parameter	CAS Number	Analytical Method	Result	Q	PQL	MDL	Units	Run
Hexachloroethane	67-72-1	8270D	ND		150	20	ug/kg	1
Indeno(1,2,3-c,d)pyrene	193-39-5	8270D	ND		150	22	ug/kg	1
Isophorone	78-59-1	8270D	ND		150	17	ug/kg	1
2-Methylnaphthalene	91-57-6	8270D	ND		150	23	ug/kg	1
2-Methylphenol	95-48-7	8270D	ND		150	14	ug/kg	1
3 & 4-Methylphenol	106-44-5	8270D	ND		290	27	ug/kg	1
Naphthalene	91-20-3	8270D	ND		150	23	ug/kg	1
2-Nitroaniline	88-74-4	8270D	ND		290	52	ug/kg	1
3-Nitroaniline	99-09-2	8270D	ND		290	88	ug/kg	1
4-Nitroaniline	100-01-6	8270D	ND		290	43	ug/kg	1
Nitrobenzene	98-95-3	8270D	ND		150	12	ug/kg	1
2-Nitrophenol	88-75-5	8270D	ND		290	42	ug/kg	1
4-Nitrophenol	100-02-7	8270D	ND		750	220	ug/kg	1
N-Nitrosodi-n-propylamine	621-64-7	8270D	ND		150	29	ug/kg	1
N-Nitrosodiphenylamine (Diphenylamine)	86-30-6	8270D	ND		150	19	ug/kg	1
Pentachlorophenol	87-86-5	8270D	ND		750	310	ug/kg	1
Phenanthrene	85-01-8	8270D	ND		150	20	ug/kg	1
Phenol	108-95-2	8270D	ND		150	21	ug/kg	1
Pyrene	129-00-0	8270D	ND		150	30	ug/kg	1
2,4,5-Trichlorophenol	95-95-4	8270D	ND		150	21	ug/kg	1
2,4,6-Trichlorophenol	88-06-2	8270D	ND		150	22	ug/kg	1

Surrogate	Q	Run 1 % Recovery	Acceptance Limits
2-Fluorobiphenyl		73	33-102
2-Fluorophenol		70	28-104
Nitrobenzene-d5		66	22-109
Phenol-d5		71	27-103
Terphenyl-d14		71	41-120
2,4,6-Tribromophenol		78	30-117

PQL = Practical quantitation limit
B = Detected in the method blank
E = Quantitation of compound exceeded the calibration range
ND = Not detected at or above the MDL
J = Estimated result < PQL and ≥ MDL
P = The RPD between two GC columns exceeds 40%
Where applicable, all soil sample analysis are reported on a dry weight basis unless flagged with a "W"
N = Recovery is out of criteria
H = Out of holding time

RCRA Metals

Client: **ARCADIS U.S., Inc.**
Laboratory ID: **LC17068-017**
Description: **F39SB008 (4-5)**
Matrix: **Solid**
Date Sampled: **03/18/2010 0820**
% Solids: **87.0** **03/20/2010 0010**
Date Received: **03/19/2010**

Run	Prep Method	Analytical Method	Dilution	Analysis Date	Analyst	Prep Date	Batch
1		7471B	1	03/23/2010 0023	BNW	03/22/2010 2050	29905
1	3050B	6010C	1	03/24/2010 0026	CDF	03/22/2010 1730	29899

Parameter	CAS Number	Analytical Method	Result	Q	PQL	MDL	Units	Run
Arsenic	**7440-38-2**	**6010C**	**0.30**	**J**	**0.55**	**0.20**	**mg/kg**	**1**
Barium	**7440-39-3**	**6010C**	**6.2**		**1.4**	**0.099**	**mg/kg**	**1**
Cadmium	**7440-43-9**	**6010C**	**0.037**	**BJ**	**0.11**	**0.011**	**mg/kg**	**1**
Chromium	**7440-47-3**	**6010C**	**2.7**	**B**	**0.27**	**0.055**	**mg/kg**	**1**
Lead	**7439-92-1**	**6010C**	**3.7**		**0.55**	**0.10**	**mg/kg**	**1**
Mercury	**7439-97-6**	**7471B**	**0.028**	**J**	**0.091**	**0.0064**	**mg/kg**	**1**
Selenium	**7782-49-2**	**6010C**	**0.47**	**BJ**	**0.55**	**0.19**	**mg/kg**	**1**
Silver	7440-22-4	6010C	ND		0.27	0.046	mg/kg	1

PQL = Practical quantitation limit
B = Detected in the method blank
E = Quantitation of compound exceeded the calibration range
ND = Not detected at or above the MDL
J = Estimated result < PQL and ≥ MDL
P = The RPD between two GC columns exceeds 40%
Where applicable, all soil sample analysis are reported on a dry weight basis unless flagged with a "W"
N = Recovery is out of criteria
H = Out of holding time

Volatile Organic Compounds by GC/MS

Client: **ARCADIS U.S., Inc.**
Laboratory ID: **LC17068-018**
Description: **F39SB002 (4-5)**
Matrix: **Solid**
Date Sampled: **03/18/2010 0844**
% Solids: **86.8** **03/20/2010 0010**
Date Received: **03/19/2010**

Run	Prep Method	Analytical Method	Dilution	Analysis Date	Analyst	Prep Date	Batch	Sample Wt.(g)
1	5035	8260B	1	03/23/2010 0417	RRH		30086	6.52

Parameter	CAS Number	Analytical Method	Result	Q	PQL	MDL	Units	Run
Acetone	**67-64-1**	**8260B**	**15**	**J**	**18**	**5.9**	**ug/kg**	**1**
Benzene	71-43-2	8260B	ND		4.4	0.97	ug/kg	1
Bromodichloromethane	75-27-4	8260B	ND		4.4	1.5	ug/kg	1
Bromoform	75-25-2	8260B	ND		4.4	0.62	ug/kg	1
Bromomethane (Methyl bromide)	74-83-9	8260B	ND		4.4	1.6	ug/kg	1
2-Butanone (MEK)	78-93-3	8260B	ND		8.8	2.1	ug/kg	1
Carbon disulfide	75-15-0	8260B	ND		4.4	1.1	ug/kg	1
Carbon tetrachloride	56-23-5	8260B	ND		4.4	1.6	ug/kg	1
Chlorobenzene	108-90-7	8260B	ND		4.4	1.5	ug/kg	1
Chloroethane	75-00-3	8260B	ND		4.4	1.1	ug/kg	1
Chloroform	67-66-3	8260B	ND		4.4	0.73	ug/kg	1
Chloromethane (Methyl chloride)	74-87-3	8260B	ND		4.4	0.88	ug/kg	1
Cyclohexane	110-82-7	8260B	ND		4.4	0.60	ug/kg	1
1,2-Dibromo-3-chloropropane (DBCP)	96-12-8	8260B	ND		4.4	1.3	ug/kg	1
Dibromochloromethane	124-48-1	8260B	ND		4.4	1.5	ug/kg	1
1,2-Dibromoethane (EDB)	106-93-4	8260B	ND		4.4	0.75	ug/kg	1
1,2-Dichlorobenzene	95-50-1	8260B	ND		4.4	1.5	ug/kg	1
1,3-Dichlorobenzene	541-73-1	8260B	ND		4.4	1.5	ug/kg	1
1,4-Dichlorobenzene	106-46-7	8260B	ND		4.4	1.5	ug/kg	1
Dichlorodifluoromethane	75-71-8	8260B	ND		4.4	1.4	ug/kg	1
1,1-Dichloroethane	75-34-3	8260B	ND		4.4	0.64	ug/kg	1
1,2-Dichloroethane	107-06-2	8260B	ND		4.4	0.88	ug/kg	1
1,1-Dichloroethene	75-35-4	8260B	ND		4.4	1.5	ug/kg	1
cis-1,2-Dichloroethene	156-59-2	8260B	ND		4.4	0.67	ug/kg	1
trans-1,2-Dichloroethene	156-60-5	8260B	ND		4.4	1.3	ug/kg	1
1,2-Dichloropropane	78-87-5	8260B	ND		4.4	0.80	ug/kg	1
cis-1,3-Dichloropropene	10061-01-5	8260B	ND		4.4	0.60	ug/kg	1
trans-1,3-Dichloropropene	10061-02-6	8260B	ND		4.4	0.72	ug/kg	1
Ethylbenzene	100-41-4	8260B	ND		4.4	1.5	ug/kg	1
2-Hexanone	591-78-6	8260B	ND		8.8	1.1	ug/kg	1
Isopropylbenzene	98-82-8	8260B	ND		4.4	0.71	ug/kg	1
Methyl acetate	79-20-9	8260B	ND		4.4	0.59	ug/kg	1
Methyl tertiary butyl ether (MTBE)	1634-04-4	8260B	ND		4.4	0.35	ug/kg	1
4-Methyl-2-pentanone	108-10-1	8260B	ND		8.8	1.3	ug/kg	1
Methylcyclohexane	108-87-2	8260B	ND		4.4	0.54	ug/kg	1
Methylene chloride	75-09-2	8260B	ND		4.4	2.3	ug/kg	1
Styrene	100-42-5	8260B	ND		4.4	0.97	ug/kg	1
1,1,2,2-Tetrachloroethane	79-34-5	8260B	ND		4.4	0.42	ug/kg	1
Tetrachloroethene	127-18-4	8260B	ND		4.4	2.0	ug/kg	1
Toluene	108-88-3	8260B	ND		4.4	1.5	ug/kg	1
1,1,2-Trichloro-1,2,2-Trifluoroethane	76-13-1	8260B	ND		4.4	1.9	ug/kg	1
1,2,4-Trichlorobenzene	120-82-1	8260B	ND		4.4	1.5	ug/kg	1
1,1,1-Trichloroethane	71-55-6	8260B	ND		4.4	0.75	ug/kg	1
1,1,2-Trichloroethane	79-00-5	8260B	ND		4.4	0.70	ug/kg	1

PQL = Practical quantitation limit
B = Detected in the method blank
E = Quantitation of compound exceeded the calibration range
ND = Not detected at or above the MDL
J = Estimated result < PQL and ≥ MDL
P = The RPD between two GC columns exceeds 40%
Where applicable, all soil sample analysis are reported on a dry weight basis unless flagged with a "W"
N = Recovery is out of criteria
H = Out of holding time

Volatile Organic Compounds by GC/MS

Client: **ARCADIS U.S., Inc.**	Laboratory ID: **LC17068-018**
Description: **F39SB002 (4-5)**	Matrix: **Solid**
Date Sampled: **03/18/2010 0844**	% Solids: **86.8** **03/20/2010 0010**
Date Received: **03/19/2010**	

Run	Prep Method	Analytical Method	Dilution	Analysis Date	Analyst	Prep Date	Batch	Sample Wt.(g)
1	5035	8260B	1	03/23/2010 0417	RRH		30086	6.52

Parameter	CAS Number	Analytical Method	Result	Q	PQL	MDL	Units	Run
Trichloroethene	79-01-6	8260B	ND		4.4	1.7	ug/kg	1
Trichlorofluoromethane	75-69-4	8260B	ND		4.4	1.3	ug/kg	1
Vinyl chloride	75-01-4	8260B	ND		4.4	0.76	ug/kg	1
Xylenes (total)	1330-20-7	8260B	ND		4.4	2.6	ug/kg	1

Surrogate	Q	Run 1 % Recovery	Acceptance Limits
1,2-Dichloroethane-d4		93	53-142
Bromofluorobenzene		102	47-138
Toluene-d8		101	68-124

PQL = Practical quantitation limit
ND = Not detected at or above the MDL
Where applicable, all soil sample analysis are reported on a dry weight basis unless flagged with a "W"
B = Detected in the method blank
J = Estimated result < PQL and ≥ MDL
E = Quantitation of compound exceeded the calibration range
P = The RPD between two GC columns exceeds 40%
N = Recovery is out of criteria
H = Out of holding time

Semivolatile Organic Compounds by GC/MS

Client: **ARCADIS U.S., Inc.**
Laboratory ID: **LC17068-018**
Description: **F39SB002 (4-5)**
Matrix: **Solid**
Date Sampled: **03/18/2010 0844**
% Solids: **86.8** **03/20/2010 0010**
Date Received: **03/19/2010**

Run	Prep Method	Analytical Method	Dilution	Analysis Date	Analyst	Prep Date	Batch
1	3550C	8270D	2	03/25/2010 1357	WD	03/22/2010 1634	29896

Parameter	CAS Number	Analytical Method	Result	Q	PQL	MDL	Units	Run
Acenaphthene	83-32-9	8270D	ND		150	24	ug/kg	1
Acenaphthylene	208-96-8	8270D	ND		150	24	ug/kg	1
Acetophenone	98-86-2	8270D	ND		150	41	ug/kg	1
Anthracene	120-12-7	8270D	ND		150	17	ug/kg	1
Atrazine	1912-24-9	8270D	ND		150	39	ug/kg	1
Benzaldehyde	100-52-7	8270D	ND		150	39	ug/kg	1
Benzo(a)anthracene	56-55-3	8270D	ND		150	20	ug/kg	1
Benzo(a)pyrene	50-32-8	8270D	ND		150	21	ug/kg	1
Benzo(b)fluoranthene	205-99-2	8270D	ND		150	22	ug/kg	1
Benzo(g,h,i)perylene	191-24-2	8270D	ND		150	26	ug/kg	1
Benzo(k)fluoranthene	207-08-9	8270D	ND		150	22	ug/kg	1
1,1'-Biphenyl	92-52-4	8270D	ND		150	23	ug/kg	1
4-Bromophenyl phenyl ether	101-55-3	8270D	ND		150	22	ug/kg	1
Butyl benzyl phthalate	85-68-7	8270D	ND		300	100	ug/kg	1
Caprolactam	105-60-2	8270D	ND		150	39	ug/kg	1
Carbazole	86-74-8	8270D	ND		150	32	ug/kg	1
4-Chloro-3-methyl phenol	59-50-7	8270D	ND		150	19	ug/kg	1
4-Chloroaniline	106-47-8	8270D	ND		150	15	ug/kg	1
bis(2-Chloroethoxy)methane	111-91-1	8270D	ND		150	23	ug/kg	1
bis(2-Chloroethyl)ether	111-44-4	8270D	ND		150	21	ug/kg	1
bis(2-Chloroisopropyl)ether	108-60-1	8270D	ND		150	25	ug/kg	1
2-Chloronaphthalene	91-58-7	8270D	ND		150	25	ug/kg	1
2-Chlorophenol	95-57-8	8270D	ND		150	21	ug/kg	1
4-Chlorophenyl phenyl ether	7005-72-3	8270D	ND		150	26	ug/kg	1
Chrysene	218-01-9	8270D	ND		150	25	ug/kg	1
Dibenzo(a,h)anthracene	53-70-3	8270D	ND		150	21	ug/kg	1
Dibenzofuran	132-64-9	8270D	ND		150	24	ug/kg	1
3,3'-Dichlorobenzidine	91-94-1	8270D	ND		750	82	ug/kg	1
2,4-Dichlorophenol	120-83-2	8270D	ND		150	23	ug/kg	1
Diethylphthalate	84-66-2	8270D	ND		150	50	ug/kg	1
Dimethyl phthalate	131-11-3	8270D	ND		150	50	ug/kg	1
2,4-Dimethylphenol	105-67-9	8270D	ND		150	28	ug/kg	1
Di-n-butyl phthalate	84-74-2	8270D	ND		150	50	ug/kg	1
4,6-Dinitro-2-methylphenol	534-52-1	8270D	ND		750	290	ug/kg	1
2,4-Dinitrophenol	51-28-5	8270D	ND		750	260	ug/kg	1
2,4-Dinitrotoluene	121-14-2	8270D	ND		300	41	ug/kg	1
2,6-Dinitrotoluene	606-20-2	8270D	ND		300	39	ug/kg	1
Di-n-octylphthalate	117-84-0	8270D	ND		150	73	ug/kg	1
bis(2-Ethylhexyl)phthalate	117-81-7	8270D	ND		150	50	ug/kg	1
Fluoranthene	206-44-0	8270D	ND		150	24	ug/kg	1
Fluorene	86-73-7	8270D	ND		150	20	ug/kg	1
Hexachlorobenzene	118-74-1	8270D	ND		150	33	ug/kg	1
Hexachlorobutadiene	87-68-3	8270D	ND		150	25	ug/kg	1
Hexachlorocyclopentadiene	77-47-4	8270D	ND		750	56	ug/kg	1

PQL = Practical quantitation limit
B = Detected in the method blank
E = Quantitation of compound exceeded the calibration range
ND = Not detected at or above the MDL
J = Estimated result < PQL and ≥ MDL
P = The RPD between two GC columns exceeds 40%
Where applicable, all soil sample analysis are reported on a dry weight basis unless flagged with a "W"
N = Recovery is out of criteria
H = Out of holding time

Semivolatile Organic Compounds by GC/MS

Client: **ARCADIS U.S., Inc.**
Laboratory ID: **LC17068-018**
Description: **F39SB002 (4-5)**
Matrix: **Solid**
Date Sampled: **03/18/2010 0844**
% Solids: **86.8** **03/20/2010 0010**
Date Received: **03/19/2010**

Run	Prep Method	Analytical Method	Dilution	Analysis Date	Analyst	Prep Date	Batch
1	3550C	8270D	2	03/25/2010 1357	WD	03/22/2010 1634	29896

Parameter	CAS Number	Analytical Method	Result	Q	PQL	MDL	Units	Run
Hexachloroethane	67-72-1	8270D	ND		150	20	ug/kg	1
Indeno(1,2,3-c,d)pyrene	193-39-5	8270D	ND		150	22	ug/kg	1
Isophorone	78-59-1	8270D	ND		150	17	ug/kg	1
2-Methylnaphthalene	91-57-6	8270D	ND		150	23	ug/kg	1
2-Methylphenol	95-48-7	8270D	ND		150	14	ug/kg	1
3 & 4-Methylphenol	106-44-5	8270D	ND		300	27	ug/kg	1
Naphthalene	91-20-3	8270D	ND		150	23	ug/kg	1
2-Nitroaniline	88-74-4	8270D	ND		300	52	ug/kg	1
3-Nitroaniline	99-09-2	8270D	ND		300	88	ug/kg	1
4-Nitroaniline	100-01-6	8270D	ND		300	43	ug/kg	1
Nitrobenzene	98-95-3	8270D	ND		150	12	ug/kg	1
2-Nitrophenol	88-75-5	8270D	ND		300	42	ug/kg	1
4-Nitrophenol	100-02-7	8270D	ND		750	220	ug/kg	1
N-Nitrosodi-n-propylamine	621-64-7	8270D	ND		150	29	ug/kg	1
N-Nitrosodiphenylamine (Diphenylamine)	86-30-6	8270D	ND		150	19	ug/kg	1
Pentachlorophenol	87-86-5	8270D	ND		750	310	ug/kg	1
Phenanthrene	85-01-8	8270D	ND		150	20	ug/kg	1
Phenol	108-95-2	8270D	ND		150	21	ug/kg	1
Pyrene	129-00-0	8270D	ND		150	30	ug/kg	1
2,4,5-Trichlorophenol	95-95-4	8270D	ND		150	21	ug/kg	1
2,4,6-Trichlorophenol	88-06-2	8270D	ND		150	22	ug/kg	1

Surrogate	Q	Run 1 % Recovery	Acceptance Limits
2-Fluorobiphenyl		71	33-102
2-Fluorophenol		67	28-104
Nitrobenzene-d5		67	22-109
Phenol-d5		70	27-103
Terphenyl-d14		74	41-120
2,4,6-Tribromophenol		75	30-117

PQL = Practical quantitation limit
B = Detected in the method blank
E = Quantitation of compound exceeded the calibration range
ND = Not detected at or above the MDL
J = Estimated result < PQL and ≥ MDL
P = The RPD between two GC columns exceeds 40%
Where applicable, all soil sample analysis are reported on a dry weight basis unless flagged with a "W"
N = Recovery is out of criteria
H = Out of holding time

RCRA Metals

Client:	**ARCADIS U.S., Inc.**	Laboratory ID:	**LC17068-018**
Description:	**F39SB002 (4-5)**	Matrix:	**Solid**
Date Sampled:	**03/18/2010 0844**	% Solids:	**86.8 03/20/2010 0010**
Date Received:	**03/19/2010**		

Run	Prep Method	Analytical Method	Dilution	Analysis Date	Analyst	Prep Date	Batch
1		7471B	1	03/23/2010 0030	BNW	03/22/2010 2050	29905
1	3050B	6010C	1	03/24/2010 0031	CDF	03/22/2010 1730	29899

Parameter	CAS Number	Analytical Method	Result	Q	PQL	MDL	Units	Run
Arsenic	7440-38-2	6010C	ND		0.57	0.21	mg/kg	1
Barium	**7440-39-3**	**6010C**	**6.4**		**1.5**	**0.10**	**mg/kg**	**1**
Cadmium	**7440-43-9**	**6010C**	**0.057**	**BJ**	**0.11**	**0.012**	**mg/kg**	**1**
Chromium	**7440-47-3**	**6010C**	**3.2**	**B**	**0.29**	**0.058**	**mg/kg**	**1**
Lead	**7439-92-1**	**6010C**	**3.6**		**0.57**	**0.11**	**mg/kg**	**1**
Mercury	**7439-97-6**	**7471B**	**0.029**	**J**	**0.094**	**0.0067**	**mg/kg**	**1**
Selenium	**7782-49-2**	**6010C**	**0.39**	**BJ**	**0.57**	**0.20**	**mg/kg**	**1**
Silver	7440-22-4	6010C	ND		0.29	0.048	mg/kg	1

PQL = Practical quantitation limit
ND = Not detected at or above the MDL
Where applicable, all soil sample analysis are reported on a dry weight basis unless flagged with a "W"
B = Detected in the method blank
J = Estimated result < PQL and ≥ MDL
E = Quantitation of compound exceeded the calibration range
P = The RPD between two GC columns exceeds 40%
N = Recovery is out of criteria
H = Out of holding time

Volatile Organic Compounds by GC/MS

Client: **ARCADIS U.S., Inc.**
Laboratory ID: **LC17068-019**
Description: **Trip Blank (031810)**
Matrix: **Aqueous**
Date Sampled: **03/19/2010 0830**
Date Received: **03/19/2010**

Run	Prep Method	Analytical Method	Dilution	Analysis Date	Analyst	Prep Date	Batch
1	5030B	8260B	1	03/23/2010 0252	DLB		30000

Parameter	CAS Number	Analytical Method	Result	Q	PQL	MDL	Units	Run
Acetone	**67-64-1**	**8260B**	**4.7**	**J**	**10**	**0.061**	**ug/L**	**1**
Benzene	71-43-2	8260B	ND		0.50	0.027	ug/L	1
Bromodichloromethane	75-27-4	8260B	ND		0.50	0.17	ug/L	1
Bromoform	75-25-2	8260B	ND		0.50	0.010	ug/L	1
Bromomethane (Methyl bromide)	74-83-9	8260B	ND		0.50	0.20	ug/L	1
2-Butanone (MEK)	78-93-3	8260B	ND		10	2.0	ug/L	1
Carbon disulfide	**75-15-0**	**8260B**	**0.16**	**BJ**	**0.50**	**0.097**	**ug/L**	**1**
Carbon tetrachloride	56-23-5	8260B	ND		0.50	0.085	ug/L	1
Chlorobenzene	108-90-7	8260B	ND		0.50	0.17	ug/L	1
Chloroethane	75-00-3	8260B	ND		0.50	0.17	ug/L	1
Chloroform	67-66-3	8260B	ND		0.50	0.17	ug/L	1
Chloromethane (Methyl chloride)	74-87-3	8260B	ND		0.50	0.17	ug/L	1
Cyclohexane	110-82-7	8260B	ND		0.50	0.30	ug/L	1
1,2-Dibromo-3-chloropropane (DBCP)	96-12-8	8260B	ND		0.50	0.069	ug/L	1
Dibromochloromethane	124-48-1	8260B	ND		0.50	0.17	ug/L	1
1,2-Dibromoethane (EDB)	106-93-4	8260B	ND		0.50	0.061	ug/L	1
1,3-Dichlorobenzene	541-73-1	8260B	ND		0.50	0.17	ug/L	1
1,2-Dichlorobenzene	95-50-1	8260B	ND		0.50	0.17	ug/L	1
1,4-Dichlorobenzene	106-46-7	8260B	ND		0.50	0.17	ug/L	1
Dichlorodifluoromethane	75-71-8	8260B	ND		0.50	0.071	ug/L	1
1,1-Dichloroethane	75-34-3	8260B	ND		0.50	0.054	ug/L	1
1,2-Dichloroethane	107-06-2	8260B	ND		0.50	0.023	ug/L	1
trans-1,2-Dichloroethene	156-60-5	8260B	ND		0.50	0.079	ug/L	1
1,1-Dichloroethene	75-35-4	8260B	ND		0.50	0.094	ug/L	1
cis-1,2-Dichloroethene	156-59-2	8260B	ND		0.50	0.087	ug/L	1
1,2-Dichloropropane	78-87-5	8260B	ND		0.50	0.081	ug/L	1
trans-1,3-Dichloropropene	10061-02-6	8260B	ND		0.50	0.18	ug/L	1
cis-1,3-Dichloropropene	10061-01-5	8260B	ND		0.50	0.090	ug/L	1
Ethylbenzene	100-41-4	8260B	ND		0.50	0.17	ug/L	1
2-Hexanone	591-78-6	8260B	ND		10	0.27	ug/L	1
Isopropylbenzene	98-82-8	8260B	ND		0.50	0.029	ug/L	1
Methyl acetate	79-20-9	8260B	ND		1.0	0.30	ug/L	1
Methyl tertiary butyl ether (MTBE)	1634-04-4	8260B	ND		0.50	0.019	ug/L	1
4-Methyl-2-pentanone	108-10-1	8260B	ND		10	0.31	ug/L	1
Methylcyclohexane	108-87-2	8260B	ND		5.0	0.95	ug/L	1
Methylene chloride	75-09-2	8260B	ND		0.50	0.17	ug/L	1
Styrene	100-42-5	8260B	ND		0.50	0.015	ug/L	1
1,1,2,2-Tetrachloroethane	79-34-5	8260B	ND		0.50	0.013	ug/L	1
Tetrachloroethene	127-18-4	8260B	ND		0.50	0.014	ug/L	1
Toluene	108-88-3	8260B	ND		0.50	0.17	ug/L	1
1,1,2-Trichloro-1,2,2-Trifluoroethane	76-13-1	8260B	ND		0.50	0.30	ug/L	1
1,2,4-Trichlorobenzene	120-82-1	8260B	ND		0.50	0.17	ug/L	1
1,1,1-Trichloroethane	71-55-6	8260B	ND		0.50	0.029	ug/L	1
1,1,2-Trichloroethane	79-00-5	8260B	ND		0.50	0.031	ug/L	1

PQL = Practical quantitation limit
B = Detected in the method blank
E = Quantitation of compound exceeded the calibration range
ND = Not detected at or above the MDL
J = Estimated result < PQL and ≥ MDL
P = The RPD between two GC columns exceeds 40%
Where applicable, all soil sample analysis are reported on a dry weight basis unless flagged with a "W"
N = Recovery is out of criteria
H = Out of holding time

Volatile Organic Compounds by GC/MS

Client: **ARCADIS U.S., Inc.**
Laboratory ID: **LC17068-019**
Description: **Trip Blank (031810)**
Matrix: **Aqueous**
Date Sampled: **03/19/2010 0830**
Date Received: **03/19/2010**

Run	Prep Method	Analytical Method	Dilution	Analysis Date	Analyst	Prep Date	Batch
1	5030B	8260B	1	03/23/2010 0252	DLB		30000

Parameter	CAS Number	Analytical Method	Result	Q	PQL	MDL	Units	Run
Trichloroethene	79-01-6	8260B	ND		0.50	0.024	ug/L	1
Trichlorofluoromethane	75-69-4	8260B	ND		0.50	0.051	ug/L	1
Vinyl chloride	75-01-4	8260B	ND		0.50	0.065	ug/L	1
Xylenes (total)	1330-20-7	8260B	ND		0.50	0.17	ug/L	1

Surrogate	Q	Run 1 % Recovery	Acceptance Limits
1,2-Dichloroethane-d4		109	70-130
Bromofluorobenzene		100	70-130
Toluene-d8		101	70-130

PQL = Practical quantitation limit
B = Detected in the method blank
E = Quantitation of compound exceeded the calibration range
ND = Not detected at or above the MDL
J = Estimated result < PQL and ≥ MDL
P = The RPD between two GC columns exceeds 40%
Where applicable, all soil sample analysis are reported on a dry weight basis unless flagged with a "W"
N = Recovery is out of criteria
H = Out of holding time

QC Summary

Volatile Organic Compounds by GC/MS - MB

Sample ID: LQ29863-001
Batch: 29863
Analytical Method: 8260B

Matrix: Solid
Prep Method: 5035

Parameter	Result	Q	Dil	PQL	MDL	Units	Analysis Date
Acetone	ND		1	20	6.7	ug/kg	03/20/2010 1538
Benzene	ND		1	5.0	1.1	ug/kg	03/20/2010 1538
Bromodichloromethane	ND		1	5.0	1.7	ug/kg	03/20/2010 1538
Bromoform	ND		1	5.0	0.70	ug/kg	03/20/2010 1538
Bromomethane (Methyl bromide)	ND		1	5.0	1.8	ug/kg	03/20/2010 1538
2-Butanone (MEK)	ND		1	10	2.4	ug/kg	03/20/2010 1538
Carbon disulfide	ND		1	5.0	1.3	ug/kg	03/20/2010 1538
Carbon tetrachloride	ND		1	5.0	1.8	ug/kg	03/20/2010 1538
Chlorobenzene	ND		1	5.0	1.7	ug/kg	03/20/2010 1538
Chloroethane	ND		1	5.0	1.3	ug/kg	03/20/2010 1538
Chloroform	ND		1	5.0	0.83	ug/kg	03/20/2010 1538
Chloromethane (Methyl chloride)	ND		1	5.0	1.0	ug/kg	03/20/2010 1538
Cyclohexane	ND		1	5.0	0.67	ug/kg	03/20/2010 1538
1,2-Dibromo-3-chloropropane (DBCP)	ND		1	5.0	1.5	ug/kg	03/20/2010 1538
Dibromochloromethane	ND		1	5.0	1.7	ug/kg	03/20/2010 1538
1,2-Dibromoethane (EDB)	ND		1	5.0	0.85	ug/kg	03/20/2010 1538
1,4-Dichlorobenzene	ND		1	5.0	1.7	ug/kg	03/20/2010 1538
1,3-Dichlorobenzene	ND		1	5.0	1.7	ug/kg	03/20/2010 1538
1,2-Dichlorobenzene	ND		1	5.0	1.7	ug/kg	03/20/2010 1538
Dichlorodifluoromethane	ND		1	5.0	1.6	ug/kg	03/20/2010 1538
1,2-Dichloroethane	ND		1	5.0	1.0	ug/kg	03/20/2010 1538
1,1-Dichloroethane	ND		1	5.0	0.73	ug/kg	03/20/2010 1538
trans-1,2-Dichloroethene	ND		1	5.0	1.5	ug/kg	03/20/2010 1538
cis-1,2-Dichloroethene	ND		1	5.0	0.76	ug/kg	03/20/2010 1538
1,1-Dichloroethene	ND		1	5.0	1.7	ug/kg	03/20/2010 1538
1,2-Dichloropropane	ND		1	5.0	0.91	ug/kg	03/20/2010 1538
trans-1,3-Dichloropropene	ND		1	5.0	0.82	ug/kg	03/20/2010 1538
cis-1,3-Dichloropropene	ND		1	5.0	0.68	ug/kg	03/20/2010 1538
Ethylbenzene	ND		1	5.0	1.7	ug/kg	03/20/2010 1538
2-Hexanone	ND		1	10	1.3	ug/kg	03/20/2010 1538
Isopropylbenzene	ND		1	5.0	0.80	ug/kg	03/20/2010 1538
Methyl acetate	ND		1	5.0	0.67	ug/kg	03/20/2010 1538
Methyl tertiary butyl ether (MTBE)	ND		1	5.0	0.40	ug/kg	03/20/2010 1538
4-Methyl-2-pentanone	ND		1	10	1.5	ug/kg	03/20/2010 1538
Methylcyclohexane	ND		1	5.0	0.61	ug/kg	03/20/2010 1538
Methylene chloride	ND		1	5.0	2.6	ug/kg	03/20/2010 1538
Styrene	ND		1	5.0	1.1	ug/kg	03/20/2010 1538
1,1,2,2-Tetrachloroethane	ND		1	5.0	0.47	ug/kg	03/20/2010 1538
Tetrachloroethene	ND		1	5.0	2.3	ug/kg	03/20/2010 1538
Toluene	ND		1	5.0	1.7	ug/kg	03/20/2010 1538
1,1,2-Trichloro-1,2,2-Trifluoroethane	ND		1	5.0	2.1	ug/kg	03/20/2010 1538
1,2,4-Trichlorobenzene	ND		1	5.0	1.7	ug/kg	03/20/2010 1538
1,1,2-Trichloroethane	ND		1	5.0	0.79	ug/kg	03/20/2010 1538
1,1,1-Trichloroethane	ND		1	5.0	0.85	ug/kg	03/20/2010 1538

PQL = Practical quantitation limit
ND = Not detected at or above the MDL
P = The RPD between two GC columns exceeds 40%
J = Estimated result < PQL and ≥ MDL
N - Recovery is out of criteria
+ - RPD is out of criteria

Where applicable, all soil sample analysis are reported on a dry weight basis unless flagged with a "W"

Note: Calculations are performed before rounding to avoid round-off errors in calculated results

Volatile Organic Compounds by GC/MS - MB

Sample ID: LQ29863-001
Batch: 29863
Analytical Method: 8260B

Matrix: Solid
Prep Method: 5035

Parameter	Result	Q	Dil	PQL	MDL	Units	Analysis Date
Trichloroethene	ND		1	5.0	1.9	ug/kg	03/20/2010 1538
Trichlorofluoromethane	ND		1	5.0	1.5	ug/kg	03/20/2010 1538
Vinyl chloride	ND		1	5.0	0.86	ug/kg	03/20/2010 1538
Xylenes (total)	ND		1	5.0	2.9	ug/kg	03/20/2010 1538

Surrogate	Q	% Rec	Acceptance Limit
Bromofluorobenzene		105	47-138
1,2-Dichloroethane-d4		96	53-142
Toluene-d8		105	68-124

PQL = Practical quantitation limit
ND = Not detected at or above the MDL
P = The RPD between two GC columns exceeds 40%
J = Estimated result < PQL and ≥ MDL
N - Recovery is out of criteria
+ - RPD is out of criteria

Where applicable, all soil sample analysis are reported on a dry weight basis unless flagged with a "W"

Note: Calculations are performed before rounding to avoid round-off errors in calculated results

Volatile Organic Compounds by GC/MS - LCS

Sample ID: LQ29863-002
Batch: 29863
Analytical Method: 8260B

Matrix: Solid
Prep Method: 5035

Parameter	Spike Amount (ug/kg)	Result (ug/kg)	Q	Dil	% Rec	% Rec Limit	Analysis Date
Acetone	100	72		1	72	42-149	03/20/2010 1405
Benzene	50	46		1	91	69-123	03/20/2010 1405
Bromodichloromethane	50	49		1	98	69-121	03/20/2010 1405
Bromoform	50	46		1	93	61-119	03/20/2010 1405
Bromomethane (Methyl bromide)	50	39		1	78	35-144	03/20/2010 1405
2-Butanone (MEK)	100	86		1	86	57-148	03/20/2010 1405
Carbon disulfide	50	45		1	90	58-122	03/20/2010 1405
Carbon tetrachloride	50	42		1	85	58-136	03/20/2010 1405
Chlorobenzene	50	46		1	92	59-129	03/20/2010 1405
Chloroethane	50	39		1	78	50-132	03/20/2010 1405
Chloroform	50	47		1	93	71-125	03/20/2010 1405
Chloromethane (Methyl chloride)	50	36		1	71	34-134	03/20/2010 1405
Cyclohexane	50	42		1	84	53-139	03/20/2010 1405
1,2-Dibromo-3-chloropropane (DBCP)	50	44		1	88	55-125	03/20/2010 1405
Dibromochloromethane	50	50		1	99	66-119	03/20/2010 1405
1,2-Dibromoethane (EDB)	50	49		1	98	74-124	03/20/2010 1405
1,4-Dichlorobenzene	50	47		1	93	52-133	03/20/2010 1405
1,3-Dichlorobenzene	50	46		1	93	51-134	03/20/2010 1405
1,2-Dichlorobenzene	50	46		1	92	57-131	03/20/2010 1405
Dichlorodifluoromethane	50	41		1	82	10-157	03/20/2010 1405
1,2-Dichloroethane	50	49		1	98	67-129	03/20/2010 1405
1,1-Dichloroethane	50	47		1	93	71-127	03/20/2010 1405
trans-1,2-Dichloroethene	50	47		1	94	68-131	03/20/2010 1405
cis-1,2-Dichloroethene	50	48		1	95	70-122	03/20/2010 1405
1,1-Dichloroethene	50	37		1	75	69-138	03/20/2010 1405
1,2-Dichloropropane	50	50		1	99	72-124	03/20/2010 1405
trans-1,3-Dichloropropene	50	52		1	104	70-124	03/20/2010 1405
cis-1,3-Dichloropropene	50	53		1	106	70-126	03/20/2010 1405
Ethylbenzene	50	47		1	94	59-128	03/20/2010 1405
2-Hexanone	100	82		1	82	54-137	03/20/2010 1405
Isopropylbenzene	50	47		1	94	50-136	03/20/2010 1405
Methyl acetate	50	42		1	84	59-137	03/20/2010 1405
Methyl tertiary butyl ether (MTBE)	50	51		1	103	72-122	03/20/2010 1405
4-Methyl-2-pentanone	100	90		1	90	60-134	03/20/2010 1405
Methylcyclohexane	50	44		1	88	41-144	03/20/2010 1405
Methylene chloride	50	46		1	93	77-129	03/20/2010 1405
Styrene	50	49		1	99	54-136	03/20/2010 1405
1,1,2,2-Tetrachloroethane	50	50		1	99	69-132	03/20/2010 1405
Tetrachloroethene	50	43		1	86	70-130	03/20/2010 1405
Toluene	50	47		1	93	61-129	03/20/2010 1405
1,1,2-Trichloro-1,2,2-Trifluoroethane	50	34		1	67	49-136	03/20/2010 1405
1,2,4-Trichlorobenzene	50	47		1	95	34-145	03/20/2010 1405
1,1,2-Trichloroethane	50	46		1	92	55-128	03/20/2010 1405
1,1,1-Trichloroethane	50	43		1	85	63-128	03/20/2010 1405

PQL = Practical quantitation limit
ND = Not detected at or above the MDL
P = The RPD between two GC columns exceeds 40%
J = Estimated result < PQL and ≥ MDL
N - Recovery is out of criteria
+ - RPD is out of criteria

Where applicable, all soil sample analysis are reported on a dry weight basis unless flagged with a "W"

Note: Calculations are performed before rounding to avoid round-off errors in calculated results

Volatile Organic Compounds by GC/MS - LCS

Sample ID: LQ29863-002
Batch: 29863
Analytical Method: 8260B

Matrix: Solid
Prep Method: 5035

Parameter	Spike Amount (ug/kg)	Result (ug/kg)	Q	Dil	% Rec	% Rec Limit	Analysis Date
Trichloroethene	50	43		1	87	62-126	03/20/2010 1405
Trichlorofluoromethane	50	38		1	76	45-138	03/20/2010 1405
Vinyl chloride	50	38		1	76	42-132	03/20/2010 1405
Xylenes (total)	100	96		1	96	58-128	03/20/2010 1405

Surrogate	Q	% Rec	Acceptance Limit
Bromofluorobenzene		109	47-138
1,2-Dichloroethane-d4		86	53-142
Toluene-d8		107	68-124

PQL = Practical quantitation limit
ND = Not detected at or above the MDL
P = The RPD between two GC columns exceeds 40%
J = Estimated result < PQL and ≥ MDL
N - Recovery is out of criteria
+ - RPD is out of criteria

Where applicable, all soil sample analysis are reported on a dry weight basis unless flagged with a "W"

Note: Calculations are performed before rounding to avoid round-off errors in calculated results

Volatile Organic Compounds by GC/MS - LCSD

Sample ID: LQ29863-003
Batch: 29863
Analytical Method: 8260B
Matrix: Solid
Prep Method: 5035

Parameter	Spike Amount (ug/kg)	Result (ug/kg)	Q	Dil	% Rec	% RPD	% Rec Limit	% RPD Limit	Analysis Date
Acetone	100	81		1	81	12	42-149	20	03/20/2010 1319
Benzene	50	53		1	106	15	69-123	20	03/20/2010 1319
Bromodichloromethane	50	55		1	109	11	69-121	20	03/20/2010 1319
Bromoform	50	50		1	99	6.8	61-119	20	03/20/2010 1319
Bromomethane (Methyl bromide)	50	52	+	1	104	28	35-144	20	03/20/2010 1319
2-Butanone (MEK)	100	85		1	85	0.99	57-148	20	03/20/2010 1319
Carbon disulfide	50	55		1	110	20	58-122	20	03/20/2010 1319
Carbon tetrachloride	50	52		1	103	20	58-136	20	03/20/2010 1319
Chlorobenzene	50	51		1	103	11	59-129	20	03/20/2010 1319
Chloroethane	50	53	+	1	106	31	50-132	20	03/20/2010 1319
Chloroform	50	53		1	106	13	71-125	20	03/20/2010 1319
Chloromethane (Methyl chloride)	50	47	+	1	93	27	34-134	20	03/20/2010 1319
Cyclohexane	50	53	+	1	105	22	53-139	20	03/20/2010 1319
1,2-Dibromo-3-chloropropane (DBCP)	50	49		1	97	9.5	55-125	20	03/20/2010 1319
Dibromochloromethane	50	54		1	107	7.6	66-119	20	03/20/2010 1319
1,2-Dibromoethane (EDB)	50	53		1	106	7.1	74-124	20	03/20/2010 1319
1,4-Dichlorobenzene	50	51		1	102	9.3	52-133	20	03/20/2010 1319
1,3-Dichlorobenzene	50	52		1	105	12	51-134	20	03/20/2010 1319
1,2-Dichlorobenzene	50	50		1	100	8.6	57-131	20	03/20/2010 1319
Dichlorodifluoromethane	50	55	+	1	111	30	10-157	20	03/20/2010 1319
1,2-Dichloroethane	50	52		1	103	5.6	67-129	20	03/20/2010 1319
1,1-Dichloroethane	50	55		1	110	16	71-127	20	03/20/2010 1319
trans-1,2-Dichloroethene	50	55		1	109	16	68-131	20	03/20/2010 1319
cis-1,2-Dichloroethene	50	54		1	107	12	70-122	20	03/20/2010 1319
1,1-Dichloroethene	50	55	+	1	111	38	69-138	20	03/20/2010 1319
1,2-Dichloropropane	50	56		1	112	12	72-124	20	03/20/2010 1319
trans-1,3-Dichloropropene	50	56		1	112	7.2	70-124	20	03/20/2010 1319
cis-1,3-Dichloropropene	50	58		1	115	9.0	70-126	20	03/20/2010 1319
Ethylbenzene	50	54		1	108	14	59-128	20	03/20/2010 1319
2-Hexanone	100	89		1	89	8.6	54-137	20	03/20/2010 1319
Isopropylbenzene	50	55		1	111	16	50-136	20	03/20/2010 1319
Methyl acetate	50	60	+	1	120	36	59-137	20	03/20/2010 1319
Methyl tertiary butyl ether (MTBE)	50	55		1	109	6.4	72-122	20	03/20/2010 1319
4-Methyl-2-pentanone	100	97		1	97	6.8	60-134	20	03/20/2010 1319
Methylcyclohexane	50	55	+	1	111	22	41-144	20	03/20/2010 1319
Methylene chloride	50	51		1	102	9.4	77-129	20	03/20/2010 1319
Styrene	50	55		1	111	11	54-136	20	03/20/2010 1319
1,1,2,2-Tetrachloroethane	50	51		1	101	2.0	69-132	20	03/20/2010 1319
Tetrachloroethene	50	50		1	101	16	70-130	20	03/20/2010 1319
Toluene	50	55		1	109	16	61-129	20	03/20/2010 1319
1,1,2-Trichloro-1,2,2-Trifluoroethane	50	49	+	1	98	37	49-136	20	03/20/2010 1319
1,2,4-Trichlorobenzene	50	52		1	105	10	34-145	20	03/20/2010 1319
1,1,2-Trichloroethane	50	50		1	99	7.3	55-128	20	03/20/2010 1319
1,1,1-Trichloroethane	50	52		1	103	19	63-128	20	03/20/2010 1319

PQL = Practical quantitation limit
P = The RPD between two GC columns exceeds 40%
N - Recovery is out of criteria
ND = Not detected at or above the MDL
J = Estimated result < PQL and ≥ MDL
+ - RPD is out of criteria
Where applicable, all soil sample analysis are reported on a dry weight basis unless flagged with a "W"

Note: Calculations are performed before rounding to avoid round-off errors in calculated results

Volatile Organic Compounds by GC/MS - LCSD

Sample ID: LQ29863-003
Batch: 29863
Analytical Method: 8260B

Matrix: Solid
Prep Method: 5035

Parameter	Spike Amount (ug/kg)	Result (ug/kg)	Q	Dil	% Rec	% RPD	% Rec Limit	% RPD Limit	Analysis Date
Trichloroethene	50	52		1	104	18	62-126	20	03/20/2010 1319
Trichlorofluoromethane	50	50	+	1	100	27	45-138	20	03/20/2010 1319
Vinyl chloride	50	53	+	1	106	33	42-132	20	03/20/2010 1319
Xylenes (total)	100	110		1	110	14	58-128	20	03/20/2010 1319

Surrogate	Q	% Rec	Acceptance Limit
Bromofluorobenzene		91	47-138
1,2-Dichloroethane-d4		78	53-142
Toluene-d8		92	68-124

PQL = Practical quantitation limit
ND = Not detected at or above the MDL
P = The RPD between two GC columns exceeds 40%
J = Estimated result < PQL and ≥ MDL
N - Recovery is out of criteria
+ - RPD is out of criteria

Where applicable, all soil sample analysis are reported on a dry weight basis unless flagged with a "W"

Note: Calculations are performed before rounding to avoid round-off errors in calculated results

Volatile Organic Compounds by GC/MS - MB

Sample ID: LQ29887-001
Batch: 29887
Analytical Method: 8260B

Matrix: Aqueous
Prep Method: 5030B

Parameter	Result	Q	Dil	PQL	MDL	Units	Analysis Date
Acetone	ND		1	10	0.061	ug/L	03/19/2010 2353
Benzene	ND		1	0.50	0.027	ug/L	03/19/2010 2353
Bromodichloromethane	ND		1	0.50	0.17	ug/L	03/19/2010 2353
Bromoform	ND		1	0.50	0.010	ug/L	03/19/2010 2353
Bromomethane (Methyl bromide)	ND		1	0.50	0.20	ug/L	03/19/2010 2353
2-Butanone (MEK)	ND		1	10	2.0	ug/L	03/19/2010 2353
Carbon disulfide	ND		1	0.50	0.097	ug/L	03/19/2010 2353
Carbon tetrachloride	ND		1	0.50	0.085	ug/L	03/19/2010 2353
Chlorobenzene	ND		1	0.50	0.17	ug/L	03/19/2010 2353
Chloroethane	ND		1	0.50	0.17	ug/L	03/19/2010 2353
Chloroform	ND		1	0.50	0.17	ug/L	03/19/2010 2353
Chloromethane (Methyl chloride)	ND		1	0.50	0.17	ug/L	03/19/2010 2353
Cyclohexane	ND		1	0.50	0.30	ug/L	03/19/2010 2353
1,2-Dibromo-3-chloropropane (DBCP)	ND		1	0.50	0.069	ug/L	03/19/2010 2353
Dibromochloromethane	ND		1	0.50	0.17	ug/L	03/19/2010 2353
1,2-Dibromoethane (EDB)	ND		1	0.50	0.061	ug/L	03/19/2010 2353
1,2-Dichlorobenzene	ND		1	0.50	0.17	ug/L	03/19/2010 2353
1,3-Dichlorobenzene	ND		1	0.50	0.17	ug/L	03/19/2010 2353
1,4-Dichlorobenzene	ND		1	0.50	0.17	ug/L	03/19/2010 2353
Dichlorodifluoromethane	ND		1	0.50	0.071	ug/L	03/19/2010 2353
1,1-Dichloroethane	ND		1	0.50	0.054	ug/L	03/19/2010 2353
1,2-Dichloroethane	ND		1	0.50	0.023	ug/L	03/19/2010 2353
1,1-Dichloroethene	ND		1	0.50	0.094	ug/L	03/19/2010 2353
cis-1,2-Dichloroethene	ND		1	0.50	0.087	ug/L	03/19/2010 2353
trans-1,2-Dichloroethene	ND		1	0.50	0.079	ug/L	03/19/2010 2353
1,2-Dichloropropane	ND		1	0.50	0.081	ug/L	03/19/2010 2353
cis-1,3-Dichloropropene	ND		1	0.50	0.090	ug/L	03/19/2010 2353
trans-1,3-Dichloropropene	ND		1	0.50	0.18	ug/L	03/19/2010 2353
Ethylbenzene	ND		1	0.50	0.17	ug/L	03/19/2010 2353
2-Hexanone	ND		1	10	0.27	ug/L	03/19/2010 2353
Isopropylbenzene	ND		1	0.50	0.029	ug/L	03/19/2010 2353
Methyl acetate	ND		1	1.0	0.30	ug/L	03/19/2010 2353
Methyl tertiary butyl ether (MTBE)	ND		1	0.50	0.019	ug/L	03/19/2010 2353
4-Methyl-2-pentanone	ND		1	10	0.31	ug/L	03/19/2010 2353
Methylcyclohexane	ND		1	5.0	0.95	ug/L	03/19/2010 2353
Methylene chloride	ND		1	0.50	0.17	ug/L	03/19/2010 2353
Styrene	ND		1	0.50	0.015	ug/L	03/19/2010 2353
1,1,2,2-Tetrachloroethane	ND		1	0.50	0.013	ug/L	03/19/2010 2353
Tetrachloroethene	ND		1	0.50	0.014	ug/L	03/19/2010 2353
Toluene	ND		1	0.50	0.17	ug/L	03/19/2010 2353
1,1,2-Trichloro-1,2,2-Trifluoroethane	ND		1	0.50	0.30	ug/L	03/19/2010 2353
1,2,4-Trichlorobenzene	ND		1	0.50	0.17	ug/L	03/19/2010 2353
1,1,2-Trichloroethane	ND		1	0.50	0.031	ug/L	03/19/2010 2353
1,1,1-Trichloroethane	ND		1	0.50	0.029	ug/L	03/19/2010 2353

PQL = Practical quantitation limit
ND = Not detected at or above the MDL
P = The RPD between two GC columns exceeds 40%
J = Estimated result < PQL and ≥ MDL
N - Recovery is out of criteria
+ - RPD is out of criteria

Where applicable, all soil sample analysis are reported on a dry weight basis unless flagged with a "W"

Note: Calculations are performed before rounding to avoid round-off errors in calculated results

Volatile Organic Compounds by GC/MS - MB

Sample ID: LQ29887-001
Batch: 29887
Analytical Method: 8260B

Matrix: Aqueous
Prep Method: 5030B

Parameter	Result	Q	Dil	PQL	MDL	Units	Analysis Date
Trichloroethene	ND		1	0.50	0.024	ug/L	03/19/2010 2353
Trichlorofluoromethane	ND		1	0.50	0.051	ug/L	03/19/2010 2353
Vinyl chloride	ND		1	0.50	0.065	ug/L	03/19/2010 2353
Xylenes (total)	ND		1	0.50	0.17	ug/L	03/19/2010 2353

Surrogate	Q	% Rec	Acceptance Limit
Bromofluorobenzene		99	70-130
1,2-Dichloroethane-d4		92	70-130
Toluene-d8		111	70-130

PQL = Practical quantitation limit
ND = Not detected at or above the MDL
P = The RPD between two GC columns exceeds 40%
J = Estimated result < PQL and ≥ MDL
N - Recovery is out of criteria
+ - RPD is out of criteria

Where applicable, all soil sample analysis are reported on a dry weight basis unless flagged with a "W"

Note: Calculations are performed before rounding to avoid round-off errors in calculated results

Volatile Organic Compounds by GC/MS - LCS

Sample ID: LQ29887-002
Batch: 29887
Analytical Method: 8260B

Matrix: Aqueous
Prep Method: 5030B

Parameter	Spike Amount (ug/L)	Result (ug/L)	Q	Dil	% Rec	% Rec Limit	Analysis Date
Acetone	100	77		1	77	46-153	03/19/2010 2225
Benzene	50	49		1	98	70-130	03/19/2010 2225
Bromodichloromethane	50	46		1	91	70-130	03/19/2010 2225
Bromoform	50	34	N	1	68	70-130	03/19/2010 2225
Bromomethane (Methyl bromide)	50	57		1	114	60-140	03/19/2010 2225
2-Butanone (MEK)	100	80		1	80	60-140	03/19/2010 2225
Carbon disulfide	50	60		1	120	60-140	03/19/2010 2225
Carbon tetrachloride	50	43		1	87	70-130	03/19/2010 2225
Chlorobenzene	50	47		1	93	70-130	03/19/2010 2225
Chloroethane	50	62		1	125	42-163	03/19/2010 2225
Chloroform	50	50		1	99	70-130	03/19/2010 2225
Chloromethane (Methyl chloride)	50	44		1	87	20-158	03/19/2010 2225
Cyclohexane	50	51		1	102	70-130	03/19/2010 2225
1,2-Dibromo-3-chloropropane (DBCP)	50	36		1	71	70-130	03/19/2010 2225
Dibromochloromethane	50	41		1	83	70-130	03/19/2010 2225
1,2-Dibromoethane (EDB)	50	44		1	88	70-130	03/19/2010 2225
1,2-Dichlorobenzene	50	46		1	92	70-130	03/19/2010 2225
1,3-Dichlorobenzene	50	46		1	92	70-130	03/19/2010 2225
1,4-Dichlorobenzene	50	46		1	92	70-130	03/19/2010 2225
Dichlorodifluoromethane	50	45		1	89	60-140	03/19/2010 2225
1,1-Dichloroethane	50	50		1	100	70-130	03/19/2010 2225
1,2-Dichloroethane	50	43		1	87	70-130	03/19/2010 2225
1,1-Dichloroethene	50	56		1	112	70-130	03/19/2010 2225
cis-1,2-Dichloroethene	50	55		1	110	70-130	03/19/2010 2225
trans-1,2-Dichloroethene	50	57		1	113	70-130	03/19/2010 2225
1,2-Dichloropropane	50	47		1	93	70-130	03/19/2010 2225
cis-1,3-Dichloropropene	50	48		1	96	70-130	03/19/2010 2225
trans-1,3-Dichloropropene	50	46		1	92	70-130	03/19/2010 2225
Ethylbenzene	50	48		1	96	70-130	03/19/2010 2225
2-Hexanone	100	67		1	67	60-140	03/19/2010 2225
Isopropylbenzene	50	48		1	96	70-130	03/19/2010 2225
Methyl acetate	50	42		1	83	15-128	03/19/2010 2225
Methyl tertiary butyl ether (MTBE)	50	48		1	96	70-130	03/19/2010 2225
4-Methyl-2-pentanone	100	70		1	70	60-140	03/19/2010 2225
Methylcyclohexane	50	47		1	94	70-130	03/19/2010 2225
Methylene chloride	50	56		1	112	70-130	03/19/2010 2225
Styrene	50	51		1	102	70-130	03/19/2010 2225
1,1,2,2-Tetrachloroethane	50	46		1	92	70-130	03/19/2010 2225
Tetrachloroethene	50	45		1	91	70-130	03/19/2010 2225
Toluene	50	48		1	95	70-130	03/19/2010 2225
1,1,2-Trichloro-1,2,2-Trifluoroethane	50	46		1	92	70-130	03/19/2010 2225
1,2,4-Trichlorobenzene	50	43		1	85	70-130	03/19/2010 2225
1,1,2-Trichloroethane	50	44		1	89	70-130	03/19/2010 2225
1,1,1-Trichloroethane	50	48		1	96	70-130	03/19/2010 2225

PQL = Practical quantitation limit
ND = Not detected at or above the MDL
P = The RPD between two GC columns exceeds 40%
J = Estimated result < PQL and ≥ MDL
N - Recovery is out of criteria
+ - RPD is out of criteria

Where applicable, all soil sample analysis are reported on a dry weight basis unless flagged with a "W"

Note: Calculations are performed before rounding to avoid round-off errors in calculated results

Volatile Organic Compounds by GC/MS - LCS

Sample ID: LQ29887-002
Batch: 29887
Analytical Method: 8260B

Matrix: Aqueous
Prep Method: 5030B

Parameter	Spike Amount (ug/L)	Result (ug/L)	Q	Dil	% Rec	% Rec Limit	Analysis Date
Trichloroethene	50	48		1	95	70-130	03/19/2010 2225
Trichlorofluoromethane	50	46		1	91	60-140	03/19/2010 2225
Vinyl chloride	50	40		1	81	60-140	03/19/2010 2225
Xylenes (total)	100	99		1	99	70-130	03/19/2010 2225

Surrogate	Q	% Rec	Acceptance Limit
Bromofluorobenzene		104	70-130
1,2-Dichloroethane-d4		88	70-130
Toluene-d8		110	70-130

PQL = Practical quantitation limit
ND = Not detected at or above the MDL
P = The RPD between two GC columns exceeds 40%
J = Estimated result < PQL and ≥ MDL
N - Recovery is out of criteria
+ - RPD is out of criteria

Where applicable, all soil sample analysis are reported on a dry weight basis unless flagged with a "W"

Note: Calculations are performed before rounding to avoid round-off errors in calculated results

Volatile Organic Compounds by GC/MS - LCSD

Sample ID: LQ29887-003
Batch: 29887
Analytical Method: 8260B

Matrix: Aqueous
Prep Method: 5030B

Parameter	Spike Amount (ug/L)	Result (ug/L)	Q	Dil	% Rec	% RPD	% Rec Limit	% RPD Limit	Analysis Date
Acetone	100	78		1	78	1.9	46-153	20	03/19/2010 2248
Benzene	50	49		1	98	0.21	70-130	20	03/19/2010 2248
Bromodichloromethane	50	49		1	97	6.3	70-130	20	03/19/2010 2248
Bromoform	50	36		1	73	7.0	70-130	20	03/19/2010 2248
Bromomethane (Methyl bromide)	50	58		1	115	1.3	60-140	20	03/19/2010 2248
2-Butanone (MEK)	100	79		1	79	1.3	60-140	20	03/19/2010 2248
Carbon disulfide	50	59		1	118	2.0	60-140	20	03/19/2010 2248
Carbon tetrachloride	50	47		1	94	7.5	70-130	20	03/19/2010 2248
Chlorobenzene	50	49		1	97	4.4	70-130	20	03/19/2010 2248
Chloroethane	50	61		1	121	2.9	42-163	20	03/19/2010 2248
Chloroform	50	53		1	106	6.6	70-130	20	03/19/2010 2248
Chloromethane (Methyl chloride)	50	45		1	89	2.5	20-158	20	03/19/2010 2248
Cyclohexane	50	51		1	101	0.52	70-130	20	03/19/2010 2248
1,2-Dibromo-3-chloropropane (DBCP)	50	36		1	73	1.8	70-130	20	03/19/2010 2248
Dibromochloromethane	50	44		1	89	7.1	70-130	20	03/19/2010 2248
1,2-Dibromoethane (EDB)	50	46		1	91	4.0	70-130	20	03/19/2010 2248
1,2-Dichlorobenzene	50	47		1	95	2.6	70-130	20	03/19/2010 2248
1,3-Dichlorobenzene	50	48		1	95	3.6	70-130	20	03/19/2010 2248
1,4-Dichlorobenzene	50	47		1	94	2.4	70-130	20	03/19/2010 2248
Dichlorodifluoromethane	50	44		1	88	1.1	60-140	20	03/19/2010 2248
1,1-Dichloroethane	50	53		1	106	5.0	70-130	20	03/19/2010 2248
1,2-Dichloroethane	50	49		1	97	11	70-130	20	03/19/2010 2248
1,1-Dichloroethene	50	57		1	113	0.91	70-130	20	03/19/2010 2248
cis-1,2-Dichloroethene	50	57		1	114	3.6	70-130	20	03/19/2010 2248
trans-1,2-Dichloroethene	50	57		1	114	0.99	70-130	20	03/19/2010 2248
1,2-Dichloropropane	50	48		1	97	4.1	70-130	20	03/19/2010 2248
cis-1,3-Dichloropropene	50	51		1	102	6.5	70-130	20	03/19/2010 2248
trans-1,3-Dichloropropene	50	49		1	97	5.2	70-130	20	03/19/2010 2248
Ethylbenzene	50	49		1	98	2.8	70-130	20	03/19/2010 2248
2-Hexanone	100	69		1	69	2.8	60-140	20	03/19/2010 2248
Isopropylbenzene	50	49		1	98	2.1	70-130	20	03/19/2010 2248
Methyl acetate	50	41		1	82	1.9	15-128	20	03/19/2010 2248
Methyl tertiary butyl ether (MTBE)	50	50		1	99	3.3	70-130	20	03/19/2010 2248
4-Methyl-2-pentanone	100	72		1	72	2.7	60-140	20	03/19/2010 2248
Methylcyclohexane	50	46		1	92	1.9	70-130	20	03/19/2010 2248
Methylene chloride	50	58		1	116	3.2	70-130	20	03/19/2010 2248
Styrene	50	53		1	106	3.5	70-130	20	03/19/2010 2248
1,1,2,2-Tetrachloroethane	50	45		1	91	1.4	70-130	20	03/19/2010 2248
Tetrachloroethene	50	45		1	90	0.27	70-130	20	03/19/2010 2248
Toluene	50	50		1	99	4.2	70-130	20	03/19/2010 2248
1,1,2-Trichloro-1,2,2-Trifluoroethane	50	46		1	91	0.97	70-130	20	03/19/2010 2248
1,2,4-Trichlorobenzene	50	46		1	91	6.7	70-130	20	03/19/2010 2248
1,1,2-Trichloroethane	50	46		1	92	3.7	70-130	20	03/19/2010 2248
1,1,1-Trichloroethane	50	52		1	103	7.9	70-130	20	03/19/2010 2248

PQL = Practical quantitation limit
ND = Not detected at or above the MDL
P = The RPD between two GC columns exceeds 40%
J = Estimated result < PQL and ≥ MDL
N - Recovery is out of criteria
+ - RPD is out of criteria

Where applicable, all soil sample analysis are reported on a dry weight basis unless flagged with a "W"

Note: Calculations are performed before rounding to avoid round-off errors in calculated results

Volatile Organic Compounds by GC/MS - LCSD

Sample ID: LQ29887-003
Batch: 29887
Analytical Method: 8260B

Matrix: Aqueous
Prep Method: 5030B

Parameter	Spike Amount (ug/L)	Result (ug/L)	Q	Dil	% Rec	% RPD	% Rec Limit	% RPD Limit	Analysis Date
Trichloroethene	50	48		1	97	1.9	70-130	20	03/19/2010 2248
Trichlorofluoromethane	50	48		1	97	5.9	60-140	20	03/19/2010 2248
Vinyl chloride	50	39		1	78	3.4	60-140	20	03/19/2010 2248
Xylenes (total)	100	100		1	102	2.6	70-130	20	03/19/2010 2248

Surrogate	Q	% Rec	Acceptance Limit
Bromofluorobenzene		104	70-130
1,2-Dichloroethane-d4		89	70-130
Toluene-d8		109	70-130

PQL = Practical quantitation limit
ND = Not detected at or above the MDL
P = The RPD between two GC columns exceeds 40%
J = Estimated result < PQL and ≥ MDL
N - Recovery is out of criteria
+ - RPD is out of criteria

Where applicable, all soil sample analysis are reported on a dry weight basis unless flagged with a "W"

Note: Calculations are performed before rounding to avoid round-off errors in calculated results

Volatile Organic Compounds by GC/MS - MB

Sample ID: LQ29942-001
Batch: 29942
Analytical Method: 8260B

Matrix: Solid
Prep Method: 5035

Parameter	Result	Q	Dil	PQL	MDL	Units	Analysis Date
Acetone	ND		1	20	6.7	ug/kg	03/22/2010 1133
Benzene	ND		1	5.0	1.1	ug/kg	03/22/2010 1133
Bromodichloromethane	ND		1	5.0	1.7	ug/kg	03/22/2010 1133
Bromoform	ND		1	5.0	0.70	ug/kg	03/22/2010 1133
Bromomethane (Methyl bromide)	ND		1	5.0	1.8	ug/kg	03/22/2010 1133
2-Butanone (MEK)	ND		1	10	2.4	ug/kg	03/22/2010 1133
Carbon disulfide	ND		1	5.0	1.3	ug/kg	03/22/2010 1133
Carbon tetrachloride	ND		1	5.0	1.8	ug/kg	03/22/2010 1133
Chlorobenzene	ND		1	5.0	1.7	ug/kg	03/22/2010 1133
Chloroethane	ND		1	5.0	1.3	ug/kg	03/22/2010 1133
Chloroform	ND		1	5.0	0.83	ug/kg	03/22/2010 1133
Chloromethane (Methyl chloride)	ND		1	5.0	1.0	ug/kg	03/22/2010 1133
Cyclohexane	ND		1	5.0	0.67	ug/kg	03/22/2010 1133
1,2-Dibromo-3-chloropropane (DBCP)	ND		1	5.0	1.5	ug/kg	03/22/2010 1133
Dibromochloromethane	ND		1	5.0	1.7	ug/kg	03/22/2010 1133
1,2-Dibromoethane (EDB)	ND		1	5.0	0.85	ug/kg	03/22/2010 1133
1,2-Dichlorobenzene	ND		1	5.0	1.7	ug/kg	03/22/2010 1133
1,4-Dichlorobenzene	ND		1	5.0	1.7	ug/kg	03/22/2010 1133
1,3-Dichlorobenzene	ND		1	5.0	1.7	ug/kg	03/22/2010 1133
Dichlorodifluoromethane	ND		1	5.0	1.6	ug/kg	03/22/2010 1133
1,1-Dichloroethane	ND		1	5.0	0.73	ug/kg	03/22/2010 1133
1,2-Dichloroethane	ND		1	5.0	1.0	ug/kg	03/22/2010 1133
cis-1,2-Dichloroethene	ND		1	5.0	0.76	ug/kg	03/22/2010 1133
1,1-Dichloroethene	ND		1	5.0	1.7	ug/kg	03/22/2010 1133
trans-1,2-Dichloroethene	ND		1	5.0	1.5	ug/kg	03/22/2010 1133
1,2-Dichloropropane	ND		1	5.0	0.91	ug/kg	03/22/2010 1133
trans-1,3-Dichloropropene	ND		1	5.0	0.82	ug/kg	03/22/2010 1133
cis-1,3-Dichloropropene	ND		1	5.0	0.68	ug/kg	03/22/2010 1133
Ethylbenzene	ND		1	5.0	1.7	ug/kg	03/22/2010 1133
2-Hexanone	ND		1	10	1.3	ug/kg	03/22/2010 1133
Isopropylbenzene	ND		1	5.0	0.80	ug/kg	03/22/2010 1133
Methyl acetate	ND		1	5.0	0.67	ug/kg	03/22/2010 1133
Methyl tertiary butyl ether (MTBE)	ND		1	5.0	0.40	ug/kg	03/22/2010 1133
4-Methyl-2-pentanone	ND		1	10	1.5	ug/kg	03/22/2010 1133
Methylcyclohexane	ND		1	5.0	0.61	ug/kg	03/22/2010 1133
Methylene chloride	ND		1	5.0	2.6	ug/kg	03/22/2010 1133
Styrene	ND		1	5.0	1.1	ug/kg	03/22/2010 1133
1,1,2,2-Tetrachloroethane	ND		1	5.0	0.47	ug/kg	03/22/2010 1133
Tetrachloroethene	ND		1	5.0	2.3	ug/kg	03/22/2010 1133
Toluene	ND		1	5.0	1.7	ug/kg	03/22/2010 1133
1,1,2-Trichloro-1,2,2-Trifluoroethane	ND		1	5.0	2.1	ug/kg	03/22/2010 1133
1,2,4-Trichlorobenzene	ND		1	5.0	1.7	ug/kg	03/22/2010 1133
1,1,2-Trichloroethane	ND		1	5.0	0.79	ug/kg	03/22/2010 1133
1,1,1-Trichloroethane	ND		1	5.0	0.85	ug/kg	03/22/2010 1133

PQL = Practical quantitation limit
ND = Not detected at or above the MDL
P = The RPD between two GC columns exceeds 40%
J = Estimated result < PQL and ≥ MDL
N - Recovery is out of criteria
+ - RPD is out of criteria

Where applicable, all soil sample analysis are reported on a dry weight basis unless flagged with a "W"

Note: Calculations are performed before rounding to avoid round-off errors in calculated results

Volatile Organic Compounds by GC/MS - MB

Sample ID: LQ29942-001
Batch: 29942
Analytical Method: 8260B

Matrix: Solid
Prep Method: 5035

Parameter	Result	Q	Dil	PQL	MDL	Units	Analysis Date
Trichloroethene	ND		1	5.0	1.9	ug/kg	03/22/2010 1133
Trichlorofluoromethane	ND		1	5.0	1.5	ug/kg	03/22/2010 1133
Vinyl chloride	ND		1	5.0	0.86	ug/kg	03/22/2010 1133
Xylenes (total)	ND		1	5.0	2.9	ug/kg	03/22/2010 1133

Surrogate	Q	% Rec	Acceptance Limit
Bromofluorobenzene		94	47-138
1,2-Dichloroethane-d4		84	53-142
Toluene-d8		95	68-124

PQL = Practical quantitation limit
ND = Not detected at or above the MDL
P = The RPD between two GC columns exceeds 40%
J = Estimated result < PQL and ≥ MDL
N - Recovery is out of criteria
+ - RPD is out of criteria

Where applicable, all soil sample analysis are reported on a dry weight basis unless flagged with a "W"

Note: Calculations are performed before rounding to avoid round-off errors in calculated results

Volatile Organic Compounds by GC/MS - LCS

Sample ID: LQ29942-002
Batch: 29942
Analytical Method: 8260B

Matrix: Solid
Prep Method: 5035

Parameter	Spike Amount (ug/kg)	Result (ug/kg)	Q	Dil	% Rec	% Rec Limit	Analysis Date
Acetone	100	130		1	130	42-149	03/22/2010 0958
Benzene	50	53		1	106	69-123	03/22/2010 0958
Bromodichloromethane	50	56		1	111	69-121	03/22/2010 0958
Bromoform	50	53		1	107	61-119	03/22/2010 0958
Bromomethane (Methyl bromide)	50	65		1	131	35-144	03/22/2010 0958
2-Butanone (MEK)	100	120		1	119	57-148	03/22/2010 0958
Carbon disulfide	50	55		1	111	58-122	03/22/2010 0958
Carbon tetrachloride	50	53		1	105	58-136	03/22/2010 0958
Chlorobenzene	50	53		1	106	59-129	03/22/2010 0958
Chloroethane	50	60		1	120	50-132	03/22/2010 0958
Chloroform	50	55		1	110	71-125	03/22/2010 0958
Chloromethane (Methyl chloride)	50	44		1	88	34-134	03/22/2010 0958
Cyclohexane	50	53		1	106	53-139	03/22/2010 0958
1,2-Dibromo-3-chloropropane (DBCP)	50	52		1	105	55-125	03/22/2010 0958
Dibromochloromethane	50	55		1	111	66-119	03/22/2010 0958
1,2-Dibromoethane (EDB)	50	56		1	112	74-124	03/22/2010 0958
1,2-Dichlorobenzene	50	52		1	104	57-131	03/22/2010 0958
1,4-Dichlorobenzene	50	53		1	106	52-133	03/22/2010 0958
1,3-Dichlorobenzene	50	53		1	106	51-134	03/22/2010 0958
Dichlorodifluoromethane	50	50		1	101	10-157	03/22/2010 0958
1,1-Dichloroethane	50	55		1	111	71-127	03/22/2010 0958
1,2-Dichloroethane	50	57		1	114	67-129	03/22/2010 0958
cis-1,2-Dichloroethene	50	56		1	112	70-122	03/22/2010 0958
1,1-Dichloroethene	50	55		1	111	69-138	03/22/2010 0958
trans-1,2-Dichloroethene	50	56		1	113	68-131	03/22/2010 0958
1,2-Dichloropropane	50	56		1	111	72-124	03/22/2010 0958
trans-1,3-Dichloropropene	50	58		1	117	70-124	03/22/2010 0958
cis-1,3-Dichloropropene	50	59		1	118	70-126	03/22/2010 0958
Ethylbenzene	50	54		1	108	59-128	03/22/2010 0958
2-Hexanone	100	110		1	111	54-137	03/22/2010 0958
Isopropylbenzene	50	56		1	112	50-136	03/22/2010 0958
Methyl acetate	50	62		1	123	59-137	03/22/2010 0958
Methyl tertiary butyl ether (MTBE)	50	61		1	122	72-122	03/22/2010 0958
4-Methyl-2-pentanone	100	130		1	127	60-134	03/22/2010 0958
Methylcyclohexane	50	55		1	110	41-144	03/22/2010 0958
Methylene chloride	50	54		1	108	77-129	03/22/2010 0958
Styrene	50	56		1	112	54-136	03/22/2010 0958
1,1,2,2-Tetrachloroethane	50	55		1	111	69-132	03/22/2010 0958
Tetrachloroethene	50	50		1	100	70-130	03/22/2010 0958
Toluene	50	55		1	110	61-129	03/22/2010 0958
1,1,2-Trichloro-1,2,2-Trifluoroethane	50	52		1	105	49-136	03/22/2010 0958
1,2,4-Trichlorobenzene	50	53		1	106	34-145	03/22/2010 0958
1,1,2-Trichloroethane	50	52		1	104	55-128	03/22/2010 0958
1,1,1-Trichloroethane	50	52		1	105	63-128	03/22/2010 0958

PQL = Practical quantitation limit
ND = Not detected at or above the MDL
P = The RPD between two GC columns exceeds 40%
J = Estimated result < PQL and ≥ MDL
N - Recovery is out of criteria
+ - RPD is out of criteria

Where applicable, all soil sample analysis are reported on a dry weight basis unless flagged with a "W"

Note: Calculations are performed before rounding to avoid round-off errors in calculated results

Volatile Organic Compounds by GC/MS - LCS

Sample ID: LQ29942-002
Batch: 29942
Analytical Method: 8260B

Matrix: Solid
Prep Method: 5035

Parameter	Spike Amount (ug/kg)	Result (ug/kg)	Q	Dil	% Rec	% Rec Limit	Analysis Date
Trichloroethene	50	52		1	104	62-126	03/22/2010 0958
Trichlorofluoromethane	50	54		1	108	45-138	03/22/2010 0958
Vinyl chloride	50	53		1	106	42-132	03/22/2010 0958
Xylenes (total)	100	110		1	110	58-128	03/22/2010 0958

Surrogate	Q	% Rec	Acceptance Limit
Bromofluorobenzene		115	47-138
1,2-Dichloroethane-d4		101	53-142
Toluene-d8		116	68-124

PQL = Practical quantitation limit
ND = Not detected at or above the MDL
P = The RPD between two GC columns exceeds 40%
J = Estimated result < PQL and ≥ MDL
N - Recovery is out of criteria
+ - RPD is out of criteria
Where applicable, all soil sample analysis are reported on a dry weight basis unless flagged with a "W"

Note: Calculations are performed before rounding to avoid round-off errors in calculated results

Volatile Organic Compounds by GC/MS - LCSD

Sample ID: LQ29942-003
Batch: 29942
Analytical Method: 8260B

Matrix: Solid
Prep Method: 5035

Parameter	Spike Amount (ug/kg)	Result (ug/kg)	Q	Dil	% Rec	% RPD	% Rec Limit	% RPD Limit	Analysis Date
Acetone	100	110	+	1	106	21	42-149	20	03/22/2010 1022
Benzene	50	54		1	108	1.7	69-123	20	03/22/2010 1022
Bromodichloromethane	50	57		1	114	2.9	69-121	20	03/22/2010 1022
Bromoform	50	54		1	108	1.6	61-119	20	03/22/2010 1022
Bromomethane (Methyl bromide)	50	58		1	116	12	35-144	20	03/22/2010 1022
2-Butanone (MEK)	100	110		1	112	5.4	57-148	20	03/22/2010 1022
Carbon disulfide	50	55		1	110	0.52	58-122	20	03/22/2010 1022
Carbon tetrachloride	50	53		1	105	0.078	58-136	20	03/22/2010 1022
Chlorobenzene	50	54		1	108	1.2	59-129	20	03/22/2010 1022
Chloroethane	50	77	N,+	1	154	24	50-132	20	03/22/2010 1022
Chloroform	50	55		1	110	0.56	71-125	20	03/22/2010 1022
Chloromethane (Methyl chloride)	50	44		1	88	0.31	34-134	20	03/22/2010 1022
Cyclohexane	50	52		1	104	1.3	53-139	20	03/22/2010 1022
1,2-Dibromo-3-chloropropane (DBCP)	50	51		1	103	1.6	55-125	20	03/22/2010 1022
Dibromochloromethane	50	57		1	115	3.5	66-119	20	03/22/2010 1022
1,2-Dibromoethane (EDB)	50	55		1	111	0.69	74-124	20	03/22/2010 1022
1,2-Dichlorobenzene	50	53		1	105	0.85	57-131	20	03/22/2010 1022
1,4-Dichlorobenzene	50	54		1	107	0.79	52-133	20	03/22/2010 1022
1,3-Dichlorobenzene	50	53		1	107	0.71	51-134	20	03/22/2010 1022
Dichlorodifluoromethane	50	59		1	118	16	10-157	20	03/22/2010 1022
1,1-Dichloroethane	50	56		1	113	1.7	71-127	20	03/22/2010 1022
1,2-Dichloroethane	50	57		1	113	0.63	67-129	20	03/22/2010 1022
cis-1,2-Dichloroethene	50	57		1	115	1.9	70-122	20	03/22/2010 1022
1,1-Dichloroethene	50	55		1	110	0.98	69-138	20	03/22/2010 1022
trans-1,2-Dichloroethene	50	56		1	112	1.1	68-131	20	03/22/2010 1022
1,2-Dichloropropane	50	57		1	115	3.2	72-124	20	03/22/2010 1022
trans-1,3-Dichloropropene	50	59		1	118	1.3	70-124	20	03/22/2010 1022
cis-1,3-Dichloropropene	50	62		1	123	4.3	70-126	20	03/22/2010 1022
Ethylbenzene	50	55		1	110	1.8	59-128	20	03/22/2010 1022
2-Hexanone	100	110		1	109	1.6	54-137	20	03/22/2010 1022
Isopropylbenzene	50	56		1	113	1.1	50-136	20	03/22/2010 1022
Methyl acetate	50	60		1	119	3.6	59-137	20	03/22/2010 1022
Methyl tertiary butyl ether (MTBE)	50	61		1	121	0.62	72-122	20	03/22/2010 1022
4-Methyl-2-pentanone	100	120		1	120	6.2	60-134	20	03/22/2010 1022
Methylcyclohexane	50	55		1	110	0.36	41-144	20	03/22/2010 1022
Methylene chloride	50	55		1	110	1.1	77-129	20	03/22/2010 1022
Styrene	50	57		1	115	2.2	54-136	20	03/22/2010 1022
1,1,2,2-Tetrachloroethane	50	55		1	110	0.72	69-132	20	03/22/2010 1022
Tetrachloroethene	50	52		1	103	2.6	70-130	20	03/22/2010 1022
Toluene	50	56		1	113	2.3	61-129	20	03/22/2010 1022
1,1,2-Trichloro-1,2,2-Trifluoroethane	50	51		1	102	2.2	49-136	20	03/22/2010 1022
1,2,4-Trichlorobenzene	50	54		1	107	1.1	34-145	20	03/22/2010 1022
1,1,2-Trichloroethane	50	52		1	104	0.60	55-128	20	03/22/2010 1022
1,1,1-Trichloroethane	50	53		1	106	1.5	63-128	20	03/22/2010 1022

PQL = Practical quantitation limit
ND = Not detected at or above the MDL
P = The RPD between two GC columns exceeds 40%
J = Estimated result < PQL and ≥ MDL
N - Recovery is out of criteria
+ - RPD is out of criteria

Where applicable, all soil sample analysis are reported on a dry weight basis unless flagged with a "W"

Note: Calculations are performed before rounding to avoid round-off errors in calculated results

Volatile Organic Compounds by GC/MS - LCSD

Sample ID: LQ29942-003
Batch: 29942
Analytical Method: 8260B

Matrix: Solid
Prep Method: 5035

Parameter	Spike Amount (ug/kg)	Result (ug/kg)	Q	Dil	% Rec	% RPD	% Rec Limit	% RPD Limit	Analysis Date
Trichloroethene	50	53		1	106	1.6	62-126	20	03/22/2010 1022
Trichlorofluoromethane	50	54		1	109	0.85	45-138	20	03/22/2010 1022
Vinyl chloride	50	53		1	105	0.86	42-132	20	03/22/2010 1022
Xylenes (total)	100	110		1	113	3.1	58-128	20	03/22/2010 1022

Surrogate	Q	% Rec	Acceptance Limit
Bromofluorobenzene		117	47-138
1,2-Dichloroethane-d4		99	53-142
Toluene-d8		114	68-124

PQL = Practical quantitation limit
ND = Not detected at or above the MDL
P = The RPD between two GC columns exceeds 40%
J = Estimated result < PQL and ≥ MDL
N - Recovery is out of criteria
+ - RPD is out of criteria

Where applicable, all soil sample analysis are reported on a dry weight basis unless flagged with a "W"

Note: Calculations are performed before rounding to avoid round-off errors in calculated results

Volatile Organic Compounds by GC/MS - MB

Sample ID: LQ30000-001
Batch: 30000
Analytical Method: 8260B

Matrix: Aqueous
Prep Method: 5030B

Parameter	Result	Q	Dil	PQL	MDL	Units	Analysis Date
Acetone	ND		1	10	0.061	ug/L	03/22/2010 2242
Benzene	ND		1	0.50	0.027	ug/L	03/22/2010 2242
Bromodichloromethane	ND		1	0.50	0.17	ug/L	03/22/2010 2242
Bromoform	ND		1	0.50	0.010	ug/L	03/22/2010 2242
Bromomethane (Methyl bromide)	ND		1	0.50	0.20	ug/L	03/22/2010 2242
2-Butanone (MEK)	ND		1	10	2.0	ug/L	03/22/2010 2242
Carbon disulfide	**0.22**	**J**	**1**	**0.50**	**0.097**	**ug/L**	**03/22/2010 2242**
Carbon tetrachloride	ND		1	0.50	0.085	ug/L	03/22/2010 2242
Chlorobenzene	ND		1	0.50	0.17	ug/L	03/22/2010 2242
Chloroethane	ND		1	0.50	0.17	ug/L	03/22/2010 2242
Chloroform	ND		1	0.50	0.17	ug/L	03/22/2010 2242
Chloromethane (Methyl chloride)	ND		1	0.50	0.17	ug/L	03/22/2010 2242
Cyclohexane	ND		1	0.50	0.30	ug/L	03/22/2010 2242
1,2-Dibromo-3-chloropropane (DBCP)	ND		1	0.50	0.069	ug/L	03/22/2010 2242
Dibromochloromethane	ND		1	0.50	0.17	ug/L	03/22/2010 2242
1,2-Dibromoethane (EDB)	ND		1	0.50	0.061	ug/L	03/22/2010 2242
1,2-Dichlorobenzene	ND		1	0.50	0.17	ug/L	03/22/2010 2242
1,4-Dichlorobenzene	ND		1	0.50	0.17	ug/L	03/22/2010 2242
1,3-Dichlorobenzene	ND		1	0.50	0.17	ug/L	03/22/2010 2242
Dichlorodifluoromethane	ND		1	0.50	0.071	ug/L	03/22/2010 2242
1,1-Dichloroethane	ND		1	0.50	0.054	ug/L	03/22/2010 2242
1,2-Dichloroethane	ND		1	0.50	0.023	ug/L	03/22/2010 2242
1,1-Dichloroethene	ND		1	0.50	0.094	ug/L	03/22/2010 2242
trans-1,2-Dichloroethene	ND		1	0.50	0.079	ug/L	03/22/2010 2242
cis-1,2-Dichloroethene	ND		1	0.50	0.087	ug/L	03/22/2010 2242
1,2-Dichloropropane	ND		1	0.50	0.081	ug/L	03/22/2010 2242
trans-1,3-Dichloropropene	ND		1	0.50	0.18	ug/L	03/22/2010 2242
cis-1,3-Dichloropropene	ND		1	0.50	0.090	ug/L	03/22/2010 2242
Ethylbenzene	ND		1	0.50	0.17	ug/L	03/22/2010 2242
2-Hexanone	ND		1	10	0.27	ug/L	03/22/2010 2242
Isopropylbenzene	ND		1	0.50	0.029	ug/L	03/22/2010 2242
Methyl acetate	ND		1	1.0	0.30	ug/L	03/22/2010 2242
Methyl tertiary butyl ether (MTBE)	ND		1	0.50	0.019	ug/L	03/22/2010 2242
4-Methyl-2-pentanone	ND		1	10	0.31	ug/L	03/22/2010 2242
Methylcyclohexane	ND		1	5.0	0.95	ug/L	03/22/2010 2242
Methylene chloride	ND		1	0.50	0.17	ug/L	03/22/2010 2242
Styrene	ND		1	0.50	0.015	ug/L	03/22/2010 2242
1,1,2,2-Tetrachloroethane	ND		1	0.50	0.013	ug/L	03/22/2010 2242
Tetrachloroethene	ND		1	0.50	0.014	ug/L	03/22/2010 2242
Toluene	ND		1	0.50	0.17	ug/L	03/22/2010 2242
1,1,2-Trichloro-1,2,2-Trifluoroethane	ND		1	0.50	0.30	ug/L	03/22/2010 2242
1,2,4-Trichlorobenzene	ND		1	0.50	0.17	ug/L	03/22/2010 2242
1,1,1-Trichloroethane	ND		1	0.50	0.029	ug/L	03/22/2010 2242
1,1,2-Trichloroethane	ND		1	0.50	0.031	ug/L	03/22/2010 2242

PQL = Practical quantitation limit
ND = Not detected at or above the MDL
P = The RPD between two GC columns exceeds 40%
J = Estimated result < PQL and ≥ MDL
N - Recovery is out of criteria
+ - RPD is out of criteria

Where applicable, all soil sample analysis are reported on a dry weight basis unless flagged with a "W"

Note: Calculations are performed before rounding to avoid round-off errors in calculated results

Volatile Organic Compounds by GC/MS - MB

Sample ID: LQ30000-001
Batch: 30000
Analytical Method: 8260B

Matrix: Aqueous
Prep Method: 5030B

Parameter	Result	Q	Dil	PQL	MDL	Units	Analysis Date
Trichloroethene	ND		1	0.50	0.024	ug/L	03/22/2010 2242
Trichlorofluoromethane	ND		1	0.50	0.051	ug/L	03/22/2010 2242
Vinyl chloride	ND		1	0.50	0.065	ug/L	03/22/2010 2242
Xylenes (total)	ND		1	0.50	0.17	ug/L	03/22/2010 2242

Surrogate	Q	% Rec	Acceptance Limit
Bromofluorobenzene		103	70-130
1,2-Dichloroethane-d4		110	70-130
Toluene-d8		104	70-130

PQL = Practical quantitation limit
ND = Not detected at or above the MDL
P = The RPD between two GC columns exceeds 40%
J = Estimated result < PQL and ≥ MDL
N - Recovery is out of criteria
+ - RPD is out of criteria

Where applicable, all soil sample analysis are reported on a dry weight basis unless flagged with a "W"

Note: Calculations are performed before rounding to avoid round-off errors in calculated results

Volatile Organic Compounds by GC/MS - LCS

Sample ID: LQ30000-002
Batch: 30000
Analytical Method: 8260B
Matrix: Aqueous
Prep Method: 5030B

Parameter	Spike Amount (ug/L)	Result (ug/L)	Q	Dil	% Rec	% Rec Limit	Analysis Date
Acetone	100	110		1	113	46-153	03/22/2010 2115
Benzene	50	50		1	100	70-130	03/22/2010 2115
Bromodichloromethane	50	53		1	106	70-130	03/22/2010 2115
Bromoform	50	50		1	101	70-130	03/22/2010 2115
Bromomethane (Methyl bromide)	50	58		1	116	60-140	03/22/2010 2115
2-Butanone (MEK)	100	91		1	91	60-140	03/22/2010 2115
Carbon disulfide	50	49		1	99	60-140	03/22/2010 2115
Carbon tetrachloride	50	54		1	108	70-130	03/22/2010 2115
Chlorobenzene	50	50		1	99	70-130	03/22/2010 2115
Chloroethane	50	55		1	111	42-163	03/22/2010 2115
Chloroform	50	50		1	100	70-130	03/22/2010 2115
Chloromethane (Methyl chloride)	50	44		1	88	20-158	03/22/2010 2115
Cyclohexane	50	48		1	96	70-130	03/22/2010 2115
1,2-Dibromo-3-chloropropane (DBCP)	50	50		1	101	70-130	03/22/2010 2115
Dibromochloromethane	50	57		1	114	70-130	03/22/2010 2115
1,2-Dibromoethane (EDB)	50	52		1	105	70-130	03/22/2010 2115
1,2-Dichlorobenzene	50	51		1	102	70-130	03/22/2010 2115
1,4-Dichlorobenzene	50	49		1	99	70-130	03/22/2010 2115
1,3-Dichlorobenzene	50	50		1	100	70-130	03/22/2010 2115
Dichlorodifluoromethane	50	50		1	100	60-140	03/22/2010 2115
1,1-Dichloroethane	50	48		1	97	70-130	03/22/2010 2115
1,2-Dichloroethane	50	50		1	99	70-130	03/22/2010 2115
1,1-Dichloroethene	50	51		1	102	70-130	03/22/2010 2115
trans-1,2-Dichloroethene	50	48		1	96	70-130	03/22/2010 2115
cis-1,2-Dichloroethene	50	49		1	99	70-130	03/22/2010 2115
1,2-Dichloropropane	50	46		1	93	70-130	03/22/2010 2115
trans-1,3-Dichloropropene	50	52		1	103	70-130	03/22/2010 2115
cis-1,3-Dichloropropene	50	51		1	102	70-130	03/22/2010 2115
Ethylbenzene	50	52		1	103	70-130	03/22/2010 2115
2-Hexanone	100	95		1	95	60-140	03/22/2010 2115
Isopropylbenzene	50	57		1	114	70-130	03/22/2010 2115
Methyl acetate	50	48		1	97	15-128	03/22/2010 2115
Methyl tertiary butyl ether (MTBE)	50	54		1	108	70-130	03/22/2010 2115
4-Methyl-2-pentanone	100	99		1	99	60-140	03/22/2010 2115
Methylcyclohexane	50	54		1	109	70-130	03/22/2010 2115
Methylene chloride	50	46		1	93	70-130	03/22/2010 2115
Styrene	50	52		1	105	70-130	03/22/2010 2115
1,1,2,2-Tetrachloroethane	50	48		1	95	70-130	03/22/2010 2115
Tetrachloroethene	50	54		1	109	70-130	03/22/2010 2115
Toluene	50	49		1	98	70-130	03/22/2010 2115
1,1,2-Trichloro-1,2,2-Trifluoroethane	50	52		1	104	70-130	03/22/2010 2115
1,2,4-Trichlorobenzene	50	57		1	114	70-130	03/22/2010 2115
1,1,1-Trichloroethane	50	54		1	108	70-130	03/22/2010 2115
1,1,2-Trichloroethane	50	47		1	95	70-130	03/22/2010 2115

PQL = Practical quantitation limit
ND = Not detected at or above the MDL
P = The RPD between two GC columns exceeds 40%
J = Estimated result < PQL and ≥ MDL
N - Recovery is out of criteria
+ - RPD is out of criteria

Where applicable, all soil sample analysis are reported on a dry weight basis unless flagged with a "W"

Note: Calculations are performed before rounding to avoid round-off errors in calculated results

Volatile Organic Compounds by GC/MS - LCS

Sample ID: LQ30000-002
Batch: 30000
Analytical Method: 8260B

Matrix: Aqueous
Prep Method: 5030B

Parameter	Spike Amount (ug/L)	Result (ug/L)	Q	Dil	% Rec	% Rec Limit	Analysis Date
Trichloroethene	50	52		1	104	70-130	03/22/2010 2115
Trichlorofluoromethane	50	60		1	121	60-140	03/22/2010 2115
Vinyl chloride	50	52		1	103	60-140	03/22/2010 2115
Xylenes (total)	100	110		1	108	70-130	03/22/2010 2115

Surrogate	Q	% Rec	Acceptance Limit
Bromofluorobenzene		99	70-130
1,2-Dichloroethane-d4		109	70-130
Toluene-d8		103	70-130

PQL = Practical quantitation limit
ND = Not detected at or above the MDL
P = The RPD between two GC columns exceeds 40%
J = Estimated result < PQL and ≥ MDL
N - Recovery is out of criteria
+ - RPD is out of criteria

Where applicable, all soil sample analysis are reported on a dry weight basis unless flagged with a "W"

Note: Calculations are performed before rounding to avoid round-off errors in calculated results

Volatile Organic Compounds by GC/MS - LCSD

Sample ID: LQ30000-003
Batch: 30000
Analytical Method: 8260B
Matrix: Aqueous
Prep Method: 5030B

Parameter	Spike Amount (ug/L)	Result (ug/L)	Q	Dil	% Rec	% RPD	% Rec Limit	% RPD Limit	Analysis Date
Acetone	100	97		1	97	16	46-153	20	03/22/2010 2137
Benzene	50	49		1	98	1.9	70-130	20	03/22/2010 2137
Bromodichloromethane	50	53		1	105	0.58	70-130	20	03/22/2010 2137
Bromoform	50	50		1	100	0.33	70-130	20	03/22/2010 2137
Bromomethane (Methyl bromide)	50	54		1	109	6.3	60-140	20	03/22/2010 2137
2-Butanone (MEK)	100	88		1	88	3.4	60-140	20	03/22/2010 2137
Carbon disulfide	50	46		1	93	6.7	60-140	20	03/22/2010 2137
Carbon tetrachloride	50	52		1	104	3.8	70-130	20	03/22/2010 2137
Chlorobenzene	50	50		1	101	1.7	70-130	20	03/22/2010 2137
Chloroethane	50	51		1	103	7.4	42-163	20	03/22/2010 2137
Chloroform	50	48		1	96	4.4	70-130	20	03/22/2010 2137
Chloromethane (Methyl chloride)	50	44		1	87	1.1	20-158	20	03/22/2010 2137
Cyclohexane	50	47		1	95	0.95	70-130	20	03/22/2010 2137
1,2-Dibromo-3-chloropropane (DBCP)	50	48		1	95	5.6	70-130	20	03/22/2010 2137
Dibromochloromethane	50	57		1	114	0.47	70-130	20	03/22/2010 2137
1,2-Dibromoethane (EDB)	50	53		1	106	1.9	70-130	20	03/22/2010 2137
1,2-Dichlorobenzene	50	50		1	100	2.0	70-130	20	03/22/2010 2137
1,4-Dichlorobenzene	50	51		1	101	2.4	70-130	20	03/22/2010 2137
1,3-Dichlorobenzene	50	51		1	102	1.6	70-130	20	03/22/2010 2137
Dichlorodifluoromethane	50	47		1	95	5.8	60-140	20	03/22/2010 2137
1,1-Dichloroethane	50	46		1	91	5.9	70-130	20	03/22/2010 2137
1,2-Dichloroethane	50	48		1	96	3.0	70-130	20	03/22/2010 2137
1,1-Dichloroethene	50	48		1	97	5.5	70-130	20	03/22/2010 2137
trans-1,2-Dichloroethene	50	45		1	91	5.6	70-130	20	03/22/2010 2137
cis-1,2-Dichloroethene	50	47		1	95	4.3	70-130	20	03/22/2010 2137
1,2-Dichloropropane	50	47		1	94	1.4	70-130	20	03/22/2010 2137
trans-1,3-Dichloropropene	50	53		1	107	3.3	70-130	20	03/22/2010 2137
cis-1,3-Dichloropropene	50	53		1	106	4.3	70-130	20	03/22/2010 2137
Ethylbenzene	50	52		1	105	1.5	70-130	20	03/22/2010 2137
2-Hexanone	100	100		1	100	5.4	60-140	20	03/22/2010 2137
Isopropylbenzene	50	56		1	113	1.5	70-130	20	03/22/2010 2137
Methyl acetate	50	45		1	90	7.0	15-128	20	03/22/2010 2137
Methyl tertiary butyl ether (MTBE)	50	50		1	100	8.2	70-130	20	03/22/2010 2137
4-Methyl-2-pentanone	100	98		1	98	0.95	60-140	20	03/22/2010 2137
Methylcyclohexane	50	54		1	108	1.3	70-130	20	03/22/2010 2137
Methylene chloride	50	43		1	87	6.4	70-130	20	03/22/2010 2137
Styrene	50	53		1	105	0.69	70-130	20	03/22/2010 2137
1,1,2,2-Tetrachloroethane	50	48		1	96	0.56	70-130	20	03/22/2010 2137
Tetrachloroethene	50	54		1	108	0.087	70-130	20	03/22/2010 2137
Toluene	50	51		1	102	4.5	70-130	20	03/22/2010 2137
1,1,2-Trichloro-1,2,2-Trifluoroethane	50	50		1	100	4.1	70-130	20	03/22/2010 2137
1,2,4-Trichlorobenzene	50	53		1	107	6.8	70-130	20	03/22/2010 2137
1,1,1-Trichloroethane	50	52		1	104	4.0	70-130	20	03/22/2010 2137
1,1,2-Trichloroethane	50	49		1	98	3.0	70-130	20	03/22/2010 2137

PQL = Practical quantitation limit
ND = Not detected at or above the MDL
P = The RPD between two GC columns exceeds 40%
J = Estimated result < PQL and ≥ MDL
N - Recovery is out of criteria
+ - RPD is out of criteria
Where applicable, all soil sample analysis are reported on a dry weight basis unless flagged with a "W"

Note: Calculations are performed before rounding to avoid round-off errors in calculated results

Volatile Organic Compounds by GC/MS - LCSD

Sample ID: LQ30000-003
Batch: 30000
Analytical Method: 8260B

Matrix: Aqueous
Prep Method: 5030B

Parameter	Spike Amount (ug/L)	Result (ug/L)	Q	Dil	% Rec	% RPD	% Rec Limit	% RPD Limit	Analysis Date
Trichloroethene	50	51		1	103	0.70	70-130	20	03/22/2010 2137
Trichlorofluoromethane	50	48	+	1	96	22	60-140	20	03/22/2010 2137
Vinyl chloride	50	49		1	98	5.5	60-140	20	03/22/2010 2137
Xylenes (total)	100	110		1	108	0.15	70-130	20	03/22/2010 2137

Surrogate	Q	% Rec	Acceptance Limit
Bromofluorobenzene		103	70-130
1,2-Dichloroethane-d4		104	70-130
Toluene-d8		105	70-130

PQL = Practical quantitation limit
ND = Not detected at or above the MDL
P = The RPD between two GC columns exceeds 40%
J = Estimated result < PQL and ≥ MDL
N - Recovery is out of criteria
+ - RPD is out of criteria

Where applicable, all soil sample analysis are reported on a dry weight basis unless flagged with a "W"

Note: Calculations are performed before rounding to avoid round-off errors in calculated results

Volatile Organic Compounds by GC/MS - MB

Sample ID: LQ30086-001
Batch: 30086
Analytical Method: 8260B

Matrix: Solid
Prep Method: 5035

Parameter	Result	Q	Dil	PQL	MDL	Units	Analysis Date
Acetone	ND		1	20	6.7	ug/kg	03/23/2010 0148
Benzene	ND		1	5.0	1.1	ug/kg	03/23/2010 0148
Bromodichloromethane	ND		1	5.0	1.7	ug/kg	03/23/2010 0148
Bromoform	ND		1	5.0	0.70	ug/kg	03/23/2010 0148
Bromomethane (Methyl bromide)	ND		1	5.0	1.8	ug/kg	03/23/2010 0148
2-Butanone (MEK)	ND		1	10	2.4	ug/kg	03/23/2010 0148
Carbon disulfide	ND		1	5.0	1.3	ug/kg	03/23/2010 0148
Carbon tetrachloride	ND		1	5.0	1.8	ug/kg	03/23/2010 0148
Chlorobenzene	ND		1	5.0	1.7	ug/kg	03/23/2010 0148
Chloroethane	ND		1	5.0	1.3	ug/kg	03/23/2010 0148
Chloroform	ND		1	5.0	0.83	ug/kg	03/23/2010 0148
Chloromethane (Methyl chloride)	ND		1	5.0	1.0	ug/kg	03/23/2010 0148
Cyclohexane	ND		1	5.0	0.67	ug/kg	03/23/2010 0148
1,2-Dibromo-3-chloropropane (DBCP)	ND		1	5.0	1.5	ug/kg	03/23/2010 0148
Dibromochloromethane	ND		1	5.0	1.7	ug/kg	03/23/2010 0148
1,2-Dibromoethane (EDB)	ND		1	5.0	0.85	ug/kg	03/23/2010 0148
1,3-Dichlorobenzene	ND		1	5.0	1.7	ug/kg	03/23/2010 0148
1,2-Dichlorobenzene	ND		1	5.0	1.7	ug/kg	03/23/2010 0148
1,4-Dichlorobenzene	ND		1	5.0	1.7	ug/kg	03/23/2010 0148
Dichlorodifluoromethane	ND		1	5.0	1.6	ug/kg	03/23/2010 0148
1,2-Dichloroethane	ND		1	5.0	1.0	ug/kg	03/23/2010 0148
1,1-Dichloroethane	ND		1	5.0	0.73	ug/kg	03/23/2010 0148
trans-1,2-Dichloroethene	ND		1	5.0	1.5	ug/kg	03/23/2010 0148
cis-1,2-Dichloroethene	ND		1	5.0	0.76	ug/kg	03/23/2010 0148
1,1-Dichloroethene	ND		1	5.0	1.7	ug/kg	03/23/2010 0148
1,2-Dichloropropane	ND		1	5.0	0.91	ug/kg	03/23/2010 0148
trans-1,3-Dichloropropene	ND		1	5.0	0.82	ug/kg	03/23/2010 0148
cis-1,3-Dichloropropene	ND		1	5.0	0.68	ug/kg	03/23/2010 0148
Ethylbenzene	ND		1	5.0	1.7	ug/kg	03/23/2010 0148
2-Hexanone	ND		1	10	1.3	ug/kg	03/23/2010 0148
Isopropylbenzene	ND		1	5.0	0.80	ug/kg	03/23/2010 0148
Methyl acetate	ND		1	5.0	0.67	ug/kg	03/23/2010 0148
Methyl tertiary butyl ether (MTBE)	ND		1	5.0	0.40	ug/kg	03/23/2010 0148
4-Methyl-2-pentanone	ND		1	10	1.5	ug/kg	03/23/2010 0148
Methylcyclohexane	ND		1	5.0	0.61	ug/kg	03/23/2010 0148
Methylene chloride	ND		1	5.0	2.6	ug/kg	03/23/2010 0148
Styrene	ND		1	5.0	1.1	ug/kg	03/23/2010 0148
1,1,2,2-Tetrachloroethane	ND		1	5.0	0.47	ug/kg	03/23/2010 0148
Tetrachloroethene	ND		1	5.0	2.3	ug/kg	03/23/2010 0148
Toluene	ND		1	5.0	1.7	ug/kg	03/23/2010 0148
1,1,2-Trichloro-1,2,2-Trifluoroethane	ND		1	5.0	2.1	ug/kg	03/23/2010 0148
1,2,4-Trichlorobenzene	ND		1	5.0	1.7	ug/kg	03/23/2010 0148
1,1,2-Trichloroethane	ND		1	5.0	0.79	ug/kg	03/23/2010 0148
1,1,1-Trichloroethane	ND		1	5.0	0.85	ug/kg	03/23/2010 0148

PQL = Practical quantitation limit
ND = Not detected at or above the MDL
P = The RPD between two GC columns exceeds 40%
J = Estimated result < PQL and ≥ MDL
N - Recovery is out of criteria
+ - RPD is out of criteria

Where applicable, all soil sample analysis are reported on a dry weight basis unless flagged with a "W"

Note: Calculations are performed before rounding to avoid round-off errors in calculated results

Volatile Organic Compounds by GC/MS - MB

Sample ID: LQ30086-001
Batch: 30086
Analytical Method: 8260B

Matrix: Solid
Prep Method: 5035

Parameter	Result	Q	Dil	PQL	MDL	Units	Analysis Date
Trichloroethene	ND		1	5.0	1.9	ug/kg	03/23/2010 0148
Trichlorofluoromethane	ND		1	5.0	1.5	ug/kg	03/23/2010 0148
Vinyl chloride	ND		1	5.0	0.86	ug/kg	03/23/2010 0148
Xylenes (total)	ND		1	5.0	2.9	ug/kg	03/23/2010 0148

Surrogate	Q	% Rec	Acceptance Limit
Bromofluorobenzene		106	47-138
1,2-Dichloroethane-d4		92	53-142
Toluene-d8		109	68-124

PQL = Practical quantitation limit
ND = Not detected at or above the MDL
P = The RPD between two GC columns exceeds 40%
J = Estimated result < PQL and ≥ MDL
N - Recovery is out of criteria
+ - RPD is out of criteria

Where applicable, all soil sample analysis are reported on a dry weight basis unless flagged with a "W"

Note: Calculations are performed before rounding to avoid round-off errors in calculated results

Volatile Organic Compounds by GC/MS - LCS

Sample ID: LQ30086-002
Batch: 30086
Analytical Method: 8260B
Matrix: Solid
Prep Method: 5035

Parameter	Spike Amount (ug/kg)	Result (ug/kg)	Q	Dil	% Rec	% Rec Limit	Analysis Date
Acetone	100	81		1	81	42-149	03/23/2010 0014
Benzene	50	55		1	111	69-123	03/23/2010 0014
Bromodichloromethane	50	57		1	113	69-121	03/23/2010 0014
Bromoform	50	54		1	107	61-119	03/23/2010 0014
Bromomethane (Methyl bromide)	50	57		1	115	35-144	03/23/2010 0014
2-Butanone (MEK)	100	92		1	92	57-148	03/23/2010 0014
Carbon disulfide	50	57		1	115	58-122	03/23/2010 0014
Carbon tetrachloride	50	55		1	109	58-136	03/23/2010 0014
Chlorobenzene	50	57		1	113	59-129	03/23/2010 0014
Chloroethane	50	65		1	130	50-132	03/23/2010 0014
Chloroform	50	55		1	111	71-125	03/23/2010 0014
Chloromethane (Methyl chloride)	50	54		1	107	34-134	03/23/2010 0014
Cyclohexane	50	56		1	113	53-139	03/23/2010 0014
1,2-Dibromo-3-chloropropane (DBCP)	50	51		1	102	55-125	03/23/2010 0014
Dibromochloromethane	50	58		1	115	66-119	03/23/2010 0014
1,2-Dibromoethane (EDB)	50	55		1	111	74-124	03/23/2010 0014
1,3-Dichlorobenzene	50	57		1	114	51-134	03/23/2010 0014
1,2-Dichlorobenzene	50	55		1	110	57-131	03/23/2010 0014
1,4-Dichlorobenzene	50	57		1	114	52-133	03/23/2010 0014
Dichlorodifluoromethane	50	56		1	112	10-157	03/23/2010 0014
1,2-Dichloroethane	50	54		1	108	67-129	03/23/2010 0014
1,1-Dichloroethane	50	58		1	115	71-127	03/23/2010 0014
trans-1,2-Dichloroethene	50	57		1	115	68-131	03/23/2010 0014
cis-1,2-Dichloroethene	50	58		1	115	70-122	03/23/2010 0014
1,1-Dichloroethene	50	58		1	115	69-138	03/23/2010 0014
1,2-Dichloropropane	50	57		1	113	72-124	03/23/2010 0014
trans-1,3-Dichloropropene	50	60		1	121	70-124	03/23/2010 0014
cis-1,3-Dichloropropene	50	61		1	122	70-126	03/23/2010 0014
Ethylbenzene	50	59		1	118	59-128	03/23/2010 0014
2-Hexanone	100	100		1	103	54-137	03/23/2010 0014
Isopropylbenzene	50	63		1	126	50-136	03/23/2010 0014
Methyl acetate	50	51		1	102	59-137	03/23/2010 0014
Methyl tertiary butyl ether (MTBE)	50	57		1	115	72-122	03/23/2010 0014
4-Methyl-2-pentanone	100	110		1	112	60-134	03/23/2010 0014
Methylcyclohexane	50	60		1	119	41-144	03/23/2010 0014
Methylene chloride	50	54		1	108	77-129	03/23/2010 0014
Styrene	50	60		1	120	54-136	03/23/2010 0014
1,1,2,2-Tetrachloroethane	50	56		1	112	69-132	03/23/2010 0014
Tetrachloroethene	50	57		1	114	70-130	03/23/2010 0014
Toluene	50	58		1	115	61-129	03/23/2010 0014
1,1,2-Trichloro-1,2,2-Trifluoroethane	50	56		1	111	49-136	03/23/2010 0014
1,2,4-Trichlorobenzene	50	57		1	115	34-145	03/23/2010 0014
1,1,2-Trichloroethane	50	53		1	106	55-128	03/23/2010 0014
1,1,1-Trichloroethane	50	55		1	109	63-128	03/23/2010 0014

PQL = Practical quantitation limit
ND = Not detected at or above the MDL
P = The RPD between two GC columns exceeds 40%
J = Estimated result < PQL and ≥ MDL
N - Recovery is out of criteria
+ - RPD is out of criteria

Where applicable, all soil sample analysis are reported on a dry weight basis unless flagged with a "W"

Note: Calculations are performed before rounding to avoid round-off errors in calculated results

Volatile Organic Compounds by GC/MS - LCS

Sample ID: LQ30086-002
Batch: 30086
Analytical Method: 8260B

Matrix: Solid
Prep Method: 5035

Parameter	Spike Amount (ug/kg)	Result (ug/kg)	Q	Dil	% Rec	% Rec Limit	Analysis Date
Trichloroethene	50	54		1	108	62-126	03/23/2010 0014
Trichlorofluoromethane	50	56		1	113	45-138	03/23/2010 0014
Vinyl chloride	50	58		1	116	42-132	03/23/2010 0014
Xylenes (total)	100	120		1	120	58-128	03/23/2010 0014

Surrogate	Q	% Rec	Acceptance Limit
Bromofluorobenzene		107	47-138
1,2-Dichloroethane-d4		87	53-142
Toluene-d8		105	68-124

PQL = Practical quantitation limit
ND = Not detected at or above the MDL
P = The RPD between two GC columns exceeds 40%
J = Estimated result < PQL and ≥ MDL
N - Recovery is out of criteria
+ - RPD is out of criteria
Where applicable, all soil sample analysis are reported on a dry weight basis unless flagged with a "W"

Note: Calculations are performed before rounding to avoid round-off errors in calculated results

Volatile Organic Compounds by GC/MS - LCSD

Sample ID: LQ30086-003
Batch: 30086
Analytical Method: 8260B
Matrix: Solid
Prep Method: 5035

Parameter	Spike Amount (ug/kg)	Result (ug/kg)	Q	Dil	% Rec	% RPD	% Rec Limit	% RPD Limit	Analysis Date
Acetone	100	170	N,+	1	166	69	42-149	20	03/23/2010 0038
Benzene	50	53		1	105	5.0	69-123	20	03/23/2010 0038
Bromodichloromethane	50	56		1	112	1.3	69-121	20	03/23/2010 0038
Bromoform	50	57		1	114	5.9	61-119	20	03/23/2010 0038
Bromomethane (Methyl bromide)	50	58		1	117	1.6	35-144	20	03/23/2010 0038
2-Butanone (MEK)	100	130	+	1	133	37	57-148	20	03/23/2010 0038
Carbon disulfide	50	54		1	109	5.2	58-122	20	03/23/2010 0038
Carbon tetrachloride	50	52		1	104	4.8	58-136	20	03/23/2010 0038
Chlorobenzene	50	54		1	107	5.4	59-129	20	03/23/2010 0038
Chloroethane	50	58		1	117	11	50-132	20	03/23/2010 0038
Chloroform	50	55		1	110	1.3	71-125	20	03/23/2010 0038
Chloromethane (Methyl chloride)	50	62		1	125	15	34-134	20	03/23/2010 0038
Cyclohexane	50	53		1	106	6.5	53-139	20	03/23/2010 0038
1,2-Dibromo-3-chloropropane (DBCP)	50	61		1	121	17	55-125	20	03/23/2010 0038
Dibromochloromethane	50	57		1	115	0.57	66-119	20	03/23/2010 0038
1,2-Dibromoethane (EDB)	50	58		1	115	4.0	74-124	20	03/23/2010 0038
1,3-Dichlorobenzene	50	53		1	106	7.0	51-134	20	03/23/2010 0038
1,2-Dichlorobenzene	50	53		1	106	4.2	57-131	20	03/23/2010 0038
1,4-Dichlorobenzene	50	53		1	105	8.1	52-133	20	03/23/2010 0038
Dichlorodifluoromethane	50	56		1	111	1.0	10-157	20	03/23/2010 0038
1,2-Dichloroethane	50	57		1	115	6.6	67-129	20	03/23/2010 0038
1,1-Dichloroethane	50	56		1	113	2.0	71-127	20	03/23/2010 0038
trans-1,2-Dichloroethene	50	55		1	111	3.5	68-131	20	03/23/2010 0038
cis-1,2-Dichloroethene	50	56		1	113	2.0	70-122	20	03/23/2010 0038
1,1-Dichloroethene	50	55		1	110	4.7	69-138	20	03/23/2010 0038
1,2-Dichloropropane	50	57		1	114	0.78	72-124	20	03/23/2010 0038
trans-1,3-Dichloropropene	50	60		1	121	0.0066	70-124	20	03/23/2010 0038
cis-1,3-Dichloropropene	50	61		1	121	0.52	70-126	20	03/23/2010 0038
Ethylbenzene	50	56		1	111	5.8	59-128	20	03/23/2010 0038
2-Hexanone	100	130	+	1	131	24	54-137	20	03/23/2010 0038
Isopropylbenzene	50	57		1	115	9.6	50-136	20	03/23/2010 0038
Methyl acetate	50	71	N,+	1	141	33	59-137	20	03/23/2010 0038
Methyl tertiary butyl ether (MTBE)	50	60		1	120	4.4	72-122	20	03/23/2010 0038
4-Methyl-2-pentanone	100	140	N,+	1	141	23	60-134	20	03/23/2010 0038
Methylcyclohexane	50	55		1	110	8.1	41-144	20	03/23/2010 0038
Methylene chloride	50	53		1	106	1.8	77-129	20	03/23/2010 0038
Styrene	50	57		1	113	5.5	54-136	20	03/23/2010 0038
1,1,2,2-Tetrachloroethane	50	60		1	120	7.2	69-132	20	03/23/2010 0038
Tetrachloroethene	50	51		1	103	10	70-130	20	03/23/2010 0038
Toluene	50	55		1	109	5.4	61-129	20	03/23/2010 0038
1,1,2-Trichloro-1,2,2-Trifluoroethane	50	52		1	104	6.4	49-136	20	03/23/2010 0038
1,2,4-Trichlorobenzene	50	53		1	107	7.2	34-145	20	03/23/2010 0038
1,1,2-Trichloroethane	50	53		1	106	0.28	55-128	20	03/23/2010 0038
1,1,1-Trichloroethane	50	53		1	106	3.2	63-128	20	03/23/2010 0038

PQL = Practical quantitation limit
P = The RPD between two GC columns exceeds 40%
N - Recovery is out of criteria
ND = Not detected at or above the MDL
J = Estimated result < PQL and ≥ MDL
+ - RPD is out of criteria
Where applicable, all soil sample analysis are reported on a dry weight basis unless flagged with a "W"

Note: Calculations are performed before rounding to avoid round-off errors in calculated results

Volatile Organic Compounds by GC/MS - LCSD

Sample ID: LQ30086-003
Batch: 30086
Analytical Method: 8260B

Matrix: Solid
Prep Method: 5035

Parameter	Spike Amount (ug/kg)	Result (ug/kg)	Q	Dil	% Rec	% RPD	% Rec Limit	% RPD Limit	Analysis Date
Trichloroethene	50	53		1	105	3.1	62-126	20	03/23/2010 0038
Trichlorofluoromethane	50	53		1	107	5.7	45-138	20	03/23/2010 0038
Vinyl chloride	50	56		1	112	3.1	42-132	20	03/23/2010 0038
Xylenes (total)	100	110		1	113	5.8	58-128	20	03/23/2010 0038

Surrogate	Q	% Rec	Acceptance Limit
Bromofluorobenzene		109	47-138
1,2-Dichloroethane-d4		86	53-142
Toluene-d8		104	68-124

PQL = Practical quantitation limit
ND = Not detected at or above the MDL
P = The RPD between two GC columns exceeds 40%
J = Estimated result < PQL and ≥ MDL
N - Recovery is out of criteria
+ - RPD is out of criteria

Where applicable, all soil sample analysis are reported on a dry weight basis unless flagged with a "W"

Note: Calculations are performed before rounding to avoid round-off errors in calculated results

Volatile Organic Compounds by GC/MS - MB

Sample ID: LQ30124-001
Batch: 30124
Analytical Method: 8260B

Matrix: Solid
Prep Method: 5035

Parameter	Result	Q	Dil	PQL	MDL	Units	Analysis Date
Acetone	ND		1	20	6.7	ug/kg	03/25/2010 0020
Benzene	ND		1	5.0	1.1	ug/kg	03/25/2010 0020
Bromodichloromethane	ND		1	5.0	1.7	ug/kg	03/25/2010 0020
Bromoform	ND		1	5.0	0.70	ug/kg	03/25/2010 0020
Bromomethane (Methyl bromide)	ND		1	5.0	1.8	ug/kg	03/25/2010 0020
2-Butanone (MEK)	ND		1	10	2.4	ug/kg	03/25/2010 0020
Carbon disulfide	ND		1	5.0	1.3	ug/kg	03/25/2010 0020
Carbon tetrachloride	ND		1	5.0	1.8	ug/kg	03/25/2010 0020
Chlorobenzene	ND		1	5.0	1.7	ug/kg	03/25/2010 0020
Chloroethane	ND		1	5.0	1.3	ug/kg	03/25/2010 0020
Chloroform	ND		1	5.0	0.83	ug/kg	03/25/2010 0020
Chloromethane (Methyl chloride)	ND		1	5.0	1.0	ug/kg	03/25/2010 0020
Cyclohexane	ND		1	5.0	0.67	ug/kg	03/25/2010 0020
1,2-Dibromo-3-chloropropane (DBCP)	ND		1	5.0	1.5	ug/kg	03/25/2010 0020
Dibromochloromethane	ND		1	5.0	1.7	ug/kg	03/25/2010 0020
1,2-Dibromoethane (EDB)	ND		1	5.0	0.85	ug/kg	03/25/2010 0020
1,3-Dichlorobenzene	ND		1	5.0	1.7	ug/kg	03/25/2010 0020
1,4-Dichlorobenzene	ND		1	5.0	1.7	ug/kg	03/25/2010 0020
1,2-Dichlorobenzene	ND		1	5.0	1.7	ug/kg	03/25/2010 0020
Dichlorodifluoromethane	ND		1	5.0	1.6	ug/kg	03/25/2010 0020
1,2-Dichloroethane	ND		1	5.0	1.0	ug/kg	03/25/2010 0020
1,1-Dichloroethane	ND		1	5.0	0.73	ug/kg	03/25/2010 0020
cis-1,2-Dichloroethene	ND		1	5.0	0.76	ug/kg	03/25/2010 0020
trans-1,2-Dichloroethene	ND		1	5.0	1.5	ug/kg	03/25/2010 0020
1,1-Dichloroethene	ND		1	5.0	1.7	ug/kg	03/25/2010 0020
1,2-Dichloropropane	ND		1	5.0	0.91	ug/kg	03/25/2010 0020
cis-1,3-Dichloropropene	ND		1	5.0	0.68	ug/kg	03/25/2010 0020
trans-1,3-Dichloropropene	ND		1	5.0	0.82	ug/kg	03/25/2010 0020
Ethylbenzene	ND		1	5.0	1.7	ug/kg	03/25/2010 0020
2-Hexanone	ND		1	10	1.3	ug/kg	03/25/2010 0020
Isopropylbenzene	ND		1	5.0	0.80	ug/kg	03/25/2010 0020
Methyl acetate	ND		1	5.0	0.67	ug/kg	03/25/2010 0020
Methyl tertiary butyl ether (MTBE)	ND		1	5.0	0.40	ug/kg	03/25/2010 0020
4-Methyl-2-pentanone	ND		1	10	1.5	ug/kg	03/25/2010 0020
Methylcyclohexane	ND		1	5.0	0.61	ug/kg	03/25/2010 0020
Methylene chloride	ND		1	5.0	2.6	ug/kg	03/25/2010 0020
Styrene	ND		1	5.0	1.1	ug/kg	03/25/2010 0020
1,1,2,2-Tetrachloroethane	ND		1	5.0	0.47	ug/kg	03/25/2010 0020
Tetrachloroethene	ND		1	5.0	2.3	ug/kg	03/25/2010 0020
Toluene	ND		1	5.0	1.7	ug/kg	03/25/2010 0020
1,1,2-Trichloro-1,2,2-Trifluoroethane	ND		1	5.0	2.1	ug/kg	03/25/2010 0020
1,2,4-Trichlorobenzene	ND		1	5.0	1.7	ug/kg	03/25/2010 0020
1,1,1-Trichloroethane	ND		1	5.0	0.85	ug/kg	03/25/2010 0020
1,1,2-Trichloroethane	ND		1	5.0	0.79	ug/kg	03/25/2010 0020

PQL = Practical quantitation limit
ND = Not detected at or above the MDL
P = The RPD between two GC columns exceeds 40%
J = Estimated result < PQL and ≥ MDL
N - Recovery is out of criteria
+ - RPD is out of criteria

Where applicable, all soil sample analysis are reported on a dry weight basis unless flagged with a "W"

Note: Calculations are performed before rounding to avoid round-off errors in calculated results

Volatile Organic Compounds by GC/MS - MB

Sample ID: LQ30124-001
Batch: 30124
Analytical Method: 8260B

Matrix: Solid
Prep Method: 5035

Parameter	Result	Q	Dil	PQL	MDL	Units	Analysis Date
Trichloroethene	ND		1	5.0	1.9	ug/kg	03/25/2010 0020
Trichlorofluoromethane	ND		1	5.0	1.5	ug/kg	03/25/2010 0020
Vinyl chloride	ND		1	5.0	0.86	ug/kg	03/25/2010 0020
Xylenes (total)	ND		1	5.0	2.9	ug/kg	03/25/2010 0020

Surrogate	Q	% Rec	Acceptance Limit
Bromofluorobenzene		95	47-138
1,2-Dichloroethane-d4		80	53-142
Toluene-d8		97	68-124

PQL = Practical quantitation limit
ND = Not detected at or above the MDL
P = The RPD between two GC columns exceeds 40%
J = Estimated result < PQL and ≥ MDL
N - Recovery is out of criteria
+ - RPD is out of criteria

Where applicable, all soil sample analysis are reported on a dry weight basis unless flagged with a "W"

Note: Calculations are performed before rounding to avoid round-off errors in calculated results

Volatile Organic Compounds by GC/MS - LCS

Sample ID: LQ30124-002
Batch: 30124
Analytical Method: 8260B
Matrix: Solid
Prep Method: 5035

Parameter	Spike Amount (ug/kg)	Result (ug/kg)	Q	Dil	% Rec	% Rec Limit	Analysis Date
Acetone	100	160	N	1	163	42-149	03/24/2010 2309
Benzene	50	58		1	116	69-123	03/24/2010 2309
Bromodichloromethane	50	56		1	112	69-121	03/24/2010 2309
Bromoform	50	54		1	109	61-119	03/24/2010 2309
Bromomethane (Methyl bromide)	50	54		1	108	35-144	03/24/2010 2309
2-Butanone (MEK)	100	120		1	124	57-148	03/24/2010 2309
Carbon disulfide	50	63	N	1	126	58-122	03/24/2010 2309
Carbon tetrachloride	50	54		1	108	58-136	03/24/2010 2309
Chlorobenzene	50	56		1	113	59-129	03/24/2010 2309
Chloroethane	50	52		1	104	50-132	03/24/2010 2309
Chloroform	50	58		1	115	71-125	03/24/2010 2309
Chloromethane (Methyl chloride)	50	60		1	119	34-134	03/24/2010 2309
Cyclohexane	50	60		1	120	53-139	03/24/2010 2309
1,2-Dibromo-3-chloropropane (DBCP)	50	60		1	120	55-125	03/24/2010 2309
Dibromochloromethane	50	55		1	109	66-119	03/24/2010 2309
1,2-Dibromoethane (EDB)	50	61		1	121	74-124	03/24/2010 2309
1,3-Dichlorobenzene	50	58		1	116	51-134	03/24/2010 2309
1,4-Dichlorobenzene	50	56		1	111	52-133	03/24/2010 2309
1,2-Dichlorobenzene	50	55		1	111	57-131	03/24/2010 2309
Dichlorodifluoromethane	50	63		1	127	10-157	03/24/2010 2309
1,2-Dichloroethane	50	58		1	116	67-129	03/24/2010 2309
1,1-Dichloroethane	50	61		1	121	71-127	03/24/2010 2309
cis-1,2-Dichloroethene	50	61		1	122	70-122	03/24/2010 2309
trans-1,2-Dichloroethene	50	63		1	125	68-131	03/24/2010 2309
1,1-Dichloroethene	50	60		1	119	69-138	03/24/2010 2309
1,2-Dichloropropane	50	59		1	119	72-124	03/24/2010 2309
cis-1,3-Dichloropropene	50	60		1	121	70-126	03/24/2010 2309
trans-1,3-Dichloropropene	50	59		1	117	70-124	03/24/2010 2309
Ethylbenzene	50	59		1	118	59-128	03/24/2010 2309
2-Hexanone	100	120		1	121	54-137	03/24/2010 2309
Isopropylbenzene	50	61		1	123	50-136	03/24/2010 2309
Methyl acetate	50	69	N	1	138	59-137	03/24/2010 2309
Methyl tertiary butyl ether (MTBE)	50	62	N	1	125	72-122	03/24/2010 2309
4-Methyl-2-pentanone	100	120		1	118	60-134	03/24/2010 2309
Methylcyclohexane	50	61		1	122	41-144	03/24/2010 2309
Methylene chloride	50	58		1	115	77-129	03/24/2010 2309
Styrene	50	61		1	121	54-136	03/24/2010 2309
1,1,2,2-Tetrachloroethane	50	61		1	122	69-132	03/24/2010 2309
Tetrachloroethene	50	54		1	108	70-130	03/24/2010 2309
Toluene	50	59		1	117	61-129	03/24/2010 2309
1,1,2-Trichloro-1,2,2-Trifluoroethane	50	56		1	111	49-136	03/24/2010 2309
1,2,4-Trichlorobenzene	50	60		1	121	34-145	03/24/2010 2309
1,1,1-Trichloroethane	50	55		1	109	63-128	03/24/2010 2309
1,1,2-Trichloroethane	50	56		1	112	55-128	03/24/2010 2309

PQL = Practical quantitation limit
ND = Not detected at or above the MDL
P = The RPD between two GC columns exceeds 40%
J = Estimated result < PQL and ≥ MDL
N - Recovery is out of criteria
+ - RPD is out of criteria

Where applicable, all soil sample analysis are reported on a dry weight basis unless flagged with a "W"

Note: Calculations are performed before rounding to avoid round-off errors in calculated results

Volatile Organic Compounds by GC/MS - LCS

Sample ID: LQ30124-002
Batch: 30124
Analytical Method: 8260B

Matrix: Solid
Prep Method: 5035

Parameter	Spike Amount (ug/kg)	Result (ug/kg)	Q	Dil	% Rec	% Rec Limit	Analysis Date
Trichloroethene	50	55		1	111	62-126	03/24/2010 2309
Trichlorofluoromethane	50	54		1	108	45-138	03/24/2010 2309
Vinyl chloride	50	54		1	108	42-132	03/24/2010 2309
Xylenes (total)	100	120		1	121	58-128	03/24/2010 2309

Surrogate	Q	% Rec	Acceptance Limit
Bromofluorobenzene		91	47-138
1,2-Dichloroethane-d4		74	53-142
Toluene-d8		89	68-124

PQL = Practical quantitation limit
ND = Not detected at or above the MDL
P = The RPD between two GC columns exceeds 40%
J = Estimated result < PQL and ≥ MDL
N - Recovery is out of criteria
+ - RPD is out of criteria

Where applicable, all soil sample analysis are reported on a dry weight basis unless flagged with a "W"

Note: Calculations are performed before rounding to avoid round-off errors in calculated results

Volatile Organic Compounds by GC/MS - LCSD

Sample ID: LQ30124-003
Batch: 30124
Analytical Method: 8260B
Matrix: Solid
Prep Method: 5035

Parameter	Spike Amount (ug/kg)	Result (ug/kg)	Q	Dil	% Rec	% RPD	% Rec Limit	% RPD Limit	Analysis Date
Acetone	100	110	+	1	107	41	42-149	20	03/24/2010 2333
Benzene	50	60		1	119	2.7	69-123	20	03/24/2010 2333
Bromodichloromethane	50	56		1	112	0.66	69-121	20	03/24/2010 2333
Bromoform	50	55		1	111	2.2	61-119	20	03/24/2010 2333
Bromomethane (Methyl bromide)	50	45		1	90	18	35-144	20	03/24/2010 2333
2-Butanone (MEK)	100	110		1	113	9.1	57-148	20	03/24/2010 2333
Carbon disulfide	50	54		1	108	15	58-122	20	03/24/2010 2333
Carbon tetrachloride	50	53		1	107	1.3	58-136	20	03/24/2010 2333
Chlorobenzene	50	57		1	114	1.4	59-129	20	03/24/2010 2333
Chloroethane	50	42	+	1	84	21	50-132	20	03/24/2010 2333
Chloroform	50	57		1	115	0.18	71-125	20	03/24/2010 2333
Chloromethane (Methyl chloride)	50	64		1	127	6.2	34-134	20	03/24/2010 2333
Cyclohexane	50	60		1	120	0.095	53-139	20	03/24/2010 2333
1,2-Dibromo-3-chloropropane (DBCP)	50	61		1	122	1.3	55-125	20	03/24/2010 2333
Dibromochloromethane	50	55		1	110	1.0	66-119	20	03/24/2010 2333
1,2-Dibromoethane (EDB)	50	62		1	124	2.1	74-124	20	03/24/2010 2333
1,3-Dichlorobenzene	50	57		1	114	1.7	51-134	20	03/24/2010 2333
1,4-Dichlorobenzene	50	55		1	110	1.5	52-133	20	03/24/2010 2333
1,2-Dichlorobenzene	50	54		1	109	1.6	57-131	20	03/24/2010 2333
Dichlorodifluoromethane	50	63		1	126	0.60	10-157	20	03/24/2010 2333
1,2-Dichloroethane	50	57		1	114	1.8	67-129	20	03/24/2010 2333
1,1-Dichloroethane	50	59		1	118	2.9	71-127	20	03/24/2010 2333
cis-1,2-Dichloroethene	50	60		1	120	1.8	70-122	20	03/24/2010 2333
trans-1,2-Dichloroethene	50	57		1	114	9.6	68-131	20	03/24/2010 2333
1,1-Dichloroethene	50	52		1	104	13	69-138	20	03/24/2010 2333
1,2-Dichloropropane	50	60		1	121	1.7	72-124	20	03/24/2010 2333
cis-1,3-Dichloropropene	50	62		1	123	1.8	70-126	20	03/24/2010 2333
trans-1,3-Dichloropropene	50	60		1	119	1.5	70-124	20	03/24/2010 2333
Ethylbenzene	50	59		1	119	0.26	59-128	20	03/24/2010 2333
2-Hexanone	100	130		1	127	4.7	54-137	20	03/24/2010 2333
Isopropylbenzene	50	62		1	124	0.98	50-136	20	03/24/2010 2333
Methyl acetate	50	70	N	1	141	1.7	59-137	20	03/24/2010 2333
Methyl tertiary butyl ether (MTBE)	50	56		1	113	10	72-122	20	03/24/2010 2333
4-Methyl-2-pentanone	100	120		1	120	1.8	60-134	20	03/24/2010 2333
Methylcyclohexane	50	62		1	123	1.5	41-144	20	03/24/2010 2333
Methylene chloride	50	51		1	101	13	77-129	20	03/24/2010 2333
Styrene	50	61		1	122	0.47	54-136	20	03/24/2010 2333
1,1,2,2-Tetrachloroethane	50	62		1	123	0.74	69-132	20	03/24/2010 2333
Tetrachloroethene	50	56		1	112	4.2	70-130	20	03/24/2010 2333
Toluene	50	59		1	118	0.83	61-129	20	03/24/2010 2333
1,1,2-Trichloro-1,2,2-Trifluoroethane	50	49		1	98	13	49-136	20	03/24/2010 2333
1,2,4-Trichlorobenzene	50	60		1	119	1.5	34-145	20	03/24/2010 2333
1,1,1-Trichloroethane	50	55		1	109	0.17	63-128	20	03/24/2010 2333
1,1,2-Trichloroethane	50	57		1	114	1.9	55-128	20	03/24/2010 2333

PQL = Practical quantitation limit
ND = Not detected at or above the MDL
P = The RPD between two GC columns exceeds 40%
J = Estimated result < PQL and ≥ MDL
N - Recovery is out of criteria
+ - RPD is out of criteria

Where applicable, all soil sample analysis are reported on a dry weight basis unless flagged with a "W"

Note: Calculations are performed before rounding to avoid round-off errors in calculated results

Volatile Organic Compounds by GC/MS - LCSD

Sample ID: LQ30124-003
Batch: 30124
Analytical Method: 8260B

Matrix: Solid
Prep Method: 5035

Parameter	Spike Amount (ug/kg)	Result (ug/kg)	Q	Dil	% Rec	% RPD	% Rec Limit	% RPD Limit	Analysis Date
Trichloroethene	50	57		1	113	2.1	62-126	20	03/24/2010 2333
Trichlorofluoromethane	50	49		1	98	10	45-138	20	03/24/2010 2333
Vinyl chloride	50	59		1	118	9.0	42-132	20	03/24/2010 2333
Xylenes (total)	100	120		1	122	1.2	58-128	20	03/24/2010 2333

Surrogate	Q	% Rec	Acceptance Limit
Bromofluorobenzene		100	47-138
1,2-Dichloroethane-d4		74	53-142
Toluene-d8		98	68-124

PQL = Practical quantitation limit
ND = Not detected at or above the MDL
P = The RPD between two GC columns exceeds 40%
J = Estimated result < PQL and ≥ MDL
N - Recovery is out of criteria
+ - RPD is out of criteria

Where applicable, all soil sample analysis are reported on a dry weight basis unless flagged with a "W"

Note: Calculations are performed before rounding to avoid round-off errors in calculated results

Semivolatile Organic Compounds by GC/MS - MB

Sample ID: LQ29722-001
Batch: 29722
Analytical Method: 8270D

Matrix: Solid
Prep Method: 3550C
Prep Date: 03/19/2010 1000

Parameter	Result	Q	Dil	PQL	MDL	Units	Analysis Date
1,1'-Biphenyl	ND		1	67	10	ug/kg	03/22/2010 1600
2,4,5-Trichlorophenol	ND		1	67	9.3	ug/kg	03/22/2010 1600
2,4,6-Trichlorophenol	ND		1	67	9.8	ug/kg	03/22/2010 1600
2,4-Dichlorophenol	ND		1	67	10	ug/kg	03/22/2010 1600
2,4-Dimethylphenol	ND		1	67	12	ug/kg	03/22/2010 1600
2,4-Dinitrophenol	ND		1	330	110	ug/kg	03/22/2010 1600
2,4-Dinitrotoluene	ND		1	130	18	ug/kg	03/22/2010 1600
2,6-Dinitrotoluene	ND		1	130	17	ug/kg	03/22/2010 1600
2-Chloronaphthalene	ND		1	67	11	ug/kg	03/22/2010 1600
2-Chlorophenol	ND		1	67	9.2	ug/kg	03/22/2010 1600
2-Methylnaphthalene	ND		1	67	9.9	ug/kg	03/22/2010 1600
2-Methylphenol	ND		1	67	6.0	ug/kg	03/22/2010 1600
2-Nitroaniline	ND		1	130	23	ug/kg	03/22/2010 1600
2-Nitrophenol	ND		1	130	18	ug/kg	03/22/2010 1600
3 & 4-Methylphenol	ND		1	130	12	ug/kg	03/22/2010 1600
3,3'-Dichlorobenzidine	ND		1	330	36	ug/kg	03/22/2010 1600
3-Nitroaniline	ND		1	130	39	ug/kg	03/22/2010 1600
4,6-Dinitro-2-methylphenol	ND		1	330	130	ug/kg	03/22/2010 1600
4-Bromophenyl phenyl ether	ND		1	67	9.8	ug/kg	03/22/2010 1600
4-Chloro-3-methyl phenol	ND		1	67	8.4	ug/kg	03/22/2010 1600
4-Chloroaniline	ND		1	67	6.8	ug/kg	03/22/2010 1600
4-Chlorophenyl phenyl ether	ND		1	67	11	ug/kg	03/22/2010 1600
4-Nitroaniline	ND		1	130	19	ug/kg	03/22/2010 1600
4-Nitrophenol	ND		1	330	96	ug/kg	03/22/2010 1600
Acenaphthene	ND		1	67	11	ug/kg	03/22/2010 1600
Acenaphthylene	ND		1	67	10	ug/kg	03/22/2010 1600
Acetophenone	ND		1	67	18	ug/kg	03/22/2010 1600
Anthracene	ND		1	67	7.4	ug/kg	03/22/2010 1600
Atrazine	ND		1	67	17	ug/kg	03/22/2010 1600
Benzaldehyde	ND		1	67	17	ug/kg	03/22/2010 1600
Benzo(a)anthracene	ND		1	67	8.8	ug/kg	03/22/2010 1600
Benzo(a)pyrene	ND		1	67	9.3	ug/kg	03/22/2010 1600
Benzo(b)fluoranthene	ND		1	67	9.6	ug/kg	03/22/2010 1600
Benzo(g,h,i)perylene	ND		1	67	12	ug/kg	03/22/2010 1600
Benzo(k)fluoranthene	ND		1	67	9.5	ug/kg	03/22/2010 1600
bis(2-Chloroethoxy)methane	ND		1	67	10	ug/kg	03/22/2010 1600
bis(2-Chloroethyl)ether	ND		1	67	9.2	ug/kg	03/22/2010 1600
bis(2-Chloroisopropyl)ether	ND		1	67	11	ug/kg	03/22/2010 1600
bis(2-Ethylhexyl)phthalate	ND		1	67	22	ug/kg	03/22/2010 1600
Butyl benzyl phthalate	ND		1	130	44	ug/kg	03/22/2010 1600
Caprolactam	ND		1	67	17	ug/kg	03/22/2010 1600
Carbazole	ND		1	67	14	ug/kg	03/22/2010 1600
Chrysene	ND		1	67	11	ug/kg	03/22/2010 1600
Di-n-butyl phthalate	ND		1	67	22	ug/kg	03/22/2010 1600

PQL = Practical quantitation limit
ND = Not detected at or above the MDL
P = The RPD between two GC columns exceeds 40%
J = Estimated result < PQL and ≥ MDL
N - Recovery is out of criteria
+ - RPD is out of criteria

Where applicable, all soil sample analysis are reported on a dry weight basis unless flagged with a "W"

Note: Calculations are performed before rounding to avoid round-off errors in calculated results

Semivolatile Organic Compounds by GC/MS - MB

Sample ID: LQ29722-001
Batch: 29722
Analytical Method: 8270D

Matrix: Solid
Prep Method: 3550C
Prep Date: 03/19/2010 1000

Parameter	Result	Q	Dil	PQL	MDL	Units	Analysis Date
Di-n-octylphthalate	ND		1	67	32	ug/kg	03/22/2010 1600
Dibenzo(a,h)anthracene	ND		1	67	9.1	ug/kg	03/22/2010 1600
Dibenzofuran	ND		1	67	10	ug/kg	03/22/2010 1600
Diethylphthalate	ND		1	67	22	ug/kg	03/22/2010 1600
Dimethyl phthalate	ND		1	67	22	ug/kg	03/22/2010 1600
Fluoranthene	ND		1	67	11	ug/kg	03/22/2010 1600
Fluorene	ND		1	67	9.0	ug/kg	03/22/2010 1600
Hexachlorobenzene	ND		1	67	15	ug/kg	03/22/2010 1600
Hexachlorobutadiene	ND		1	67	11	ug/kg	03/22/2010 1600
Hexachlorocyclopentadiene	ND		1	330	25	ug/kg	03/22/2010 1600
Hexachloroethane	ND		1	67	8.9	ug/kg	03/22/2010 1600
Indeno(1,2,3-c,d)pyrene	ND		1	67	9.7	ug/kg	03/22/2010 1600
Isophorone	ND		1	67	7.4	ug/kg	03/22/2010 1600
N-Nitrosodi-n-propylamine	ND		1	67	13	ug/kg	03/22/2010 1600
N-Nitrosodiphenylamine (Diphenylamine)	ND		1	67	8.3	ug/kg	03/22/2010 1600
Naphthalene	ND		1	67	10	ug/kg	03/22/2010 1600
Nitrobenzene	ND		1	67	5.4	ug/kg	03/22/2010 1600
Pentachlorophenol	ND		1	330	140	ug/kg	03/22/2010 1600
Phenanthrene	ND		1	67	9.0	ug/kg	03/22/2010 1600
Phenol	ND		1	67	9.1	ug/kg	03/22/2010 1600
Pyrene	ND		1	67	13	ug/kg	03/22/2010 1600

Surrogate	Q	% Rec	Acceptance Limit
2,4,6-Tribromophenol		75	30-117
2-Fluorobiphenyl		53	33-102
2-Fluorophenol		50	28-104
Nitrobenzene-d5		54	22-109
Phenol-d5		54	27-103
Terphenyl-d14		67	41-120

PQL = Practical quantitation limit
ND = Not detected at or above the MDL
P = The RPD between two GC columns exceeds 40%
J = Estimated result < PQL and ≥ MDL
N - Recovery is out of criteria
+ - RPD is out of criteria

Where applicable, all soil sample analysis are reported on a dry weight basis unless flagged with a "W"

Note: Calculations are performed before rounding to avoid round-off errors in calculated results

Semivolatile Organic Compounds by GC/MS - LCS

Sample ID: LQ29722-002
Batch: 29722
Analytical Method: 8270D

Matrix: Solid
Prep Method: 3550C
Prep Date: 03/19/2010 1000

Parameter	Spike Amount (ug/kg)	Result (ug/kg)	Q	Dil	% Rec	% Rec Limit	Analysis Date
2,4,5-Trichlorophenol	1300	1200		1	90	30-130	03/22/2010 1323
2,4,6-Trichlorophenol	1300	1200		1	88	30-130	03/22/2010 1323
2,4-Dichlorophenol	1300	1000		1	77	30-130	03/22/2010 1323
2,4-Dimethylphenol	1300	900		1	67	30-130	03/22/2010 1323
2,4-Dinitrophenol	6700	4700		1	70	30-130	03/22/2010 1323
2,4-Dinitrotoluene	2700	2600		1	96	30-130	03/22/2010 1323
2,6-Dinitrotoluene	2700	2600		1	96	30-130	03/22/2010 1323
2-Chloronaphthalene	1300	990		1	74	30-130	03/22/2010 1323
2-Chlorophenol	1300	940		1	70	30-130	03/22/2010 1323
2-Methylnaphthalene	1300	950		1	71	30-130	03/22/2010 1323
2-Methylphenol	1300	900		1	68	30-130	03/22/2010 1323
2-Nitroaniline	2700	2400		1	91	30-130	03/22/2010 1323
2-Nitrophenol	2700	2200		1	82	30-130	03/22/2010 1323
3 & 4-Methylphenol	2700	1800		1	69	30-130	03/22/2010 1323
3-Nitroaniline	2700	1000		1	38	30-130	03/22/2010 1323
4,6-Dinitro-2-methylphenol	6700	7500		1	113	30-130	03/22/2010 1323
4-Bromophenyl phenyl ether	1300	1100		1	85	30-130	03/22/2010 1323
4-Chloro-3-methyl phenol	1300	1100		1	84	30-130	03/22/2010 1323
4-Chloroaniline	1300	460		1	35	10-130	03/22/2010 1323
4-Chlorophenyl phenyl ether	1300	1100		1	82	30-130	03/22/2010 1323
4-Nitroaniline	2700	2500		1	95	30-130	03/22/2010 1323
4-Nitrophenol	6700	6400		1	95	30-130	03/22/2010 1323
Acenaphthene	1300	1100		1	80	30-130	03/22/2010 1323
Acenaphthylene	1300	1100		1	81	30-130	03/22/2010 1323
Anthracene	1300	1200		1	87	30-130	03/22/2010 1323
Benzo(a)anthracene	1300	1200		1	92	30-130	03/22/2010 1323
Benzo(a)pyrene	1300	1400		1	108	30-130	03/22/2010 1323
Benzo(b)fluoranthene	1300	1300		1	94	30-130	03/22/2010 1323
Benzo(g,h,i)perylene	1300	1200		1	93	30-130	03/22/2010 1323
Benzo(k)fluoranthene	1300	1200		1	92	30-130	03/22/2010 1323
bis(2-Chloroethoxy)methane	1300	1000		1	75	30-130	03/22/2010 1323
bis(2-Chloroethyl)ether	1300	950		1	71	30-130	03/22/2010 1323
bis(2-Chloroisopropyl)ether	1300	950		1	72	30-130	03/22/2010 1323
bis(2-Ethylhexyl)phthalate	1300	1200		1	93	30-130	03/22/2010 1323
Butyl benzyl phthalate	1300	1300		1	96	30-130	03/22/2010 1323
Carbazole	1300	1200		1	90	30-130	03/22/2010 1323
Chrysene	1300	1200		1	93	30-130	03/22/2010 1323
Di-n-butyl phthalate	1300	1200		1	89	30-130	03/22/2010 1323
Di-n-octylphthalate	1300	1300		1	99	30-130	03/22/2010 1323
Dibenzo(a,h)anthracene	1300	1200		1	94	30-130	03/22/2010 1323
Dibenzofuran	1300	1100		1	79	30-130	03/22/2010 1323
Diethylphthalate	1300	1200		1	89	30-130	03/22/2010 1323
Dimethyl phthalate	1300	1100		1	84	30-130	03/22/2010 1323
Fluoranthene	1300	1200		1	87	30-130	03/22/2010 1323

PQL = Practical quantitation limit
ND = Not detected at or above the MDL
P = The RPD between two GC columns exceeds 40%
J = Estimated result < PQL and ≥ MDL
N - Recovery is out of criteria
+ - RPD is out of criteria

Where applicable, all soil sample analysis are reported on a dry weight basis unless flagged with a "W"

Note: Calculations are performed before rounding to avoid round-off errors in calculated results

Semivolatile Organic Compounds by GC/MS - LCS

Sample ID: LQ29722-002
Batch: 29722
Analytical Method: 8270D

Matrix: Solid
Prep Method: 3550C
Prep Date: 03/19/2010 1000

Parameter	Spike Amount (ug/kg)	Result (ug/kg)	Q	Dil	% Rec	% Rec Limit	Analysis Date
Fluorene	1300	1100		1	81	30-130	03/22/2010 1323
Hexachlorobenzene	1300	1100		1	83	30-130	03/22/2010 1323
Hexachlorobutadiene	1300	890		1	67	30-130	03/22/2010 1323
Hexachlorocyclopentadiene	6700	5100		1	77	30-130	03/22/2010 1323
Hexachloroethane	1300	850		1	64	30-130	03/22/2010 1323
Indeno(1,2,3-c,d)pyrene	1300	1200		1	92	30-130	03/22/2010 1323
N-Nitrosodiphenylamine (Diphenylamine)	1300	1200		1	88	30-130	03/22/2010 1323
Naphthalene	1300	930		1	70	30-130	03/22/2010 1323
Nitrobenzene	1300	1100		1	79	30-130	03/22/2010 1323
Pentachlorophenol	6700	6300		1	94	30-130	03/22/2010 1323
Phenanthrene	1300	1200		1	87	30-130	03/22/2010 1323
Phenol	1300	940		1	70	30-130	03/22/2010 1323
Pyrene	1300	1200		1	92	30-130	03/22/2010 1323

Surrogate	Q	% Rec	Acceptance Limit
2,4,6-Tribromophenol		95	30-117
2-Fluorobiphenyl		74	33-102
2-Fluorophenol		69	28-104
Nitrobenzene-d5		78	22-109
Phenol-d5		71	27-103
Terphenyl-d14		78	41-120

PQL = Practical quantitation limit
ND = Not detected at or above the MDL
P = The RPD between two GC columns exceeds 40%
J = Estimated result < PQL and ≥ MDL
N - Recovery is out of criteria
+ - RPD is out of criteria

Where applicable, all soil sample analysis are reported on a dry weight basis unless flagged with a "W"

Note: Calculations are performed before rounding to avoid round-off errors in calculated results

Semivolatile Organic Compounds by GC/MS - MS

Sample ID: LC17068-003MS
Batch: 29722
Analytical Method: 8270D

Matrix: Solid
Prep Method: 3550C
Prep Date: 03/19/2010 1000

Parameter	Sample Amount (ug/kg)	Spike Amount (ug/kg)	Result (ug/kg)	Q	Dil	% Rec	% Rec Limit	Analysis Date
Acenaphthene	ND	1500	1100		1	71	30-130	03/22/2010 1730
Acenaphthylene	ND	1500	1200		1	75	30-130	03/22/2010 1730
Anthracene	ND	1500	1300		1	82	30-130	03/22/2010 1730
Benzo(a)anthracene	ND	1500	1300		1	84	30-130	03/22/2010 1730
Benzo(a)pyrene	ND	1500	1500		1	100	30-130	03/22/2010 1730
Benzo(b)fluoranthene	ND	1500	1300		1	85	30-130	03/22/2010 1730
Benzo(g,h,i)perylene	ND	1500	1400		1	88	30-130	03/22/2010 1730
Benzo(k)fluoranthene	ND	1500	1300		1	85	30-130	03/22/2010 1730
4-Bromophenyl phenyl ether	ND	1500	1200		1	81	30-130	03/22/2010 1730
Butyl benzyl phthalate	ND	1500	1400		1	89	30-130	03/22/2010 1730
Carbazole	ND	1500	1300		1	85	30-130	03/22/2010 1730
4-Chloro-3-methyl phenol	ND	1500	1200		1	80	30-130	03/22/2010 1730
4-Chloroaniline	ND	1500	330		1	22	10-130	03/22/2010 1730
bis(2-Chloroethoxy)methane	ND	1500	940		1	61	30-130	03/22/2010 1730
bis(2-Chloroethyl)ether	ND	1500	730		1	47	30-130	03/22/2010 1730
bis(2-Chloroisopropyl)ether	ND	1500	800		1	52	30-130	03/22/2010 1730
2-Chloronaphthalene	ND	1500	1000		1	68	30-130	03/22/2010 1730
2-Chlorophenol	ND	1500	860		1	56	30-130	03/22/2010 1730
4-Chlorophenyl phenyl ether	ND	1500	1200		1	77	30-130	03/22/2010 1730
Chrysene	ND	1500	1300		1	84	30-130	03/22/2010 1730
Dibenzo(a,h)anthracene	ND	1500	1300		1	86	30-130	03/22/2010 1730
Dibenzofuran	ND	1500	1100		1	72	30-130	03/22/2010 1730
2,4-Dichlorophenol	ND	1500	1200		1	76	30-130	03/22/2010 1730
Diethylphthalate	ND	1500	1300		1	81	30-130	03/22/2010 1730
Dimethyl phthalate	ND	1500	1200		1	80	30-130	03/22/2010 1730
2,4-Dimethylphenol	ND	1500	980		1	64	30-130	03/22/2010 1730
Di-n-butyl phthalate	ND	1500	1300		1	86	30-130	03/22/2010 1730
4,6-Dinitro-2-methylphenol	ND	7700	5500		1	71	30-130	03/22/2010 1730
2,4-Dinitrophenol	ND	7700	4400		1	58	30-130	03/22/2010 1730
2,4-Dinitrotoluene	ND	3100	2500		1	80	30-130	03/22/2010 1730
2,6-Dinitrotoluene	ND	3100	2400		1	79	30-130	03/22/2010 1730
Di-n-octylphthalate	ND	1500	1400		1	91	30-130	03/22/2010 1730
bis(2-Ethylhexyl)phthalate	ND	1500	1400		1	89	30-130	03/22/2010 1730
Fluoranthene	ND	1500	1300		1	82	30-130	03/22/2010 1730
Fluorene	ND	1500	1200		1	76	30-130	03/22/2010 1730
Hexachlorobenzene	ND	1500	1200		1	78	30-130	03/22/2010 1730
Hexachlorobutadiene	ND	1500	880		1	57	30-130	03/22/2010 1730
Hexachlorocyclopentadiene	ND	7700	2700		1	35	30-130	03/22/2010 1730
Hexachloroethane	ND	1500	720		1	47	30-130	03/22/2010 1730
Indeno(1,2,3-c,d)pyrene	ND	1500	1300		1	87	30-130	03/22/2010 1730
2-Methylnaphthalene	ND	1500	960		1	62	30-130	03/22/2010 1730
2-Methylphenol	ND	1500	1000		1	65	30-130	03/22/2010 1730
3 & 4-Methylphenol	ND	3100	2000		1	64	30-130	03/22/2010 1730
Naphthalene	ND	1500	880		1	57	30-130	03/22/2010 1730

PQL = Practical quantitation limit
ND = Not detected at or above the MDL
P = The RPD between two GC columns exceeds 40%
J = Estimated result < PQL and ≥ MDL
N - Recovery is out of criteria
+ - RPD is out of criteria

Where applicable, all soil sample analysis are reported on a dry weight basis unless flagged with a "W"

Note: Calculations are performed before rounding to avoid round-off errors in calculated results

Semivolatile Organic Compounds by GC/MS - MS

Sample ID: LC17068-003MS
Batch: 29722
Analytical Method: 8270D

Matrix: Solid
Prep Method: 3550C
Prep Date: 03/19/2010 1000

Parameter	Sample Amount (ug/kg)	Spike Amount (ug/kg)	Result (ug/kg)	Q	Dil	% Rec	% Rec Limit	Analysis Date
2-Nitroaniline	ND	3100	2400		1	79	30-130	03/22/2010 1730
3-Nitroaniline	ND	3100	2200		1	70	30-130	03/22/2010 1730
4-Nitroaniline	ND	3100	2400		1	78	30-130	03/22/2010 1730
Nitrobenzene	ND	1500	810		1	53	30-130	03/22/2010 1730
2-Nitrophenol	ND	3100	1800		1	58	30-130	03/22/2010 1730
4-Nitrophenol	ND	7700	6400		1	83	30-130	03/22/2010 1730
N-Nitrosodiphenylamine (Diphenylamine)	ND	1500	1300		1	85	30-130	03/22/2010 1730
Pentachlorophenol	ND	7700	6300		1	82	30-130	03/22/2010 1730
Phenanthrene	ND	1500	1300		1	82	30-130	03/22/2010 1730
Phenol	ND	1500	930		1	60	30-130	03/22/2010 1730
Pyrene	ND	1500	1300		1	87	30-130	03/22/2010 1730
2,4,5-Trichlorophenol	ND	1500	1300		1	84	30-130	03/22/2010 1730
2,4,6-Trichlorophenol	ND	1500	1300		1	83	30-130	03/22/2010 1730

Surrogate	Q	% Rec	Acceptance Limit
2-Fluorobiphenyl		65	33-102
2-Fluorophenol		51	28-104
Nitrobenzene-d5		51	22-109
Phenol-d5		60	27-103
Terphenyl-d14		70	41-120
2,4,6-Tribromophenol		83	30-117

PQL = Practical quantitation limit
ND = Not detected at or above the MDL
P = The RPD between two GC columns exceeds 40%
J = Estimated result < PQL and ≥ MDL
N - Recovery is out of criteria
+ - RPD is out of criteria

Where applicable, all soil sample analysis are reported on a dry weight basis unless flagged with a "W"

Note: Calculations are performed before rounding to avoid round-off errors in calculated results

Semivolatile Organic Compounds by GC/MS - MSD

Sample ID: LC17068-003MD
Batch: 29722
Analytical Method: 8270D

Matrix: Solid
Prep Method: 3550C
Prep Date: 03/19/2010 1000

Parameter	Sample Amount (ug/kg)	Spike Amount (ug/kg)	Result (ug/kg)	Q	Dil	% Rec	% RPD	% Rec Limit	% RPD Limit	Analysis Date
Acenaphthene	ND	1500	1200		1	80	10	30-130	20	03/22/2010 1750
Acenaphthylene	ND	1500	1300		1	83	9.5	30-130	20	03/22/2010 1750
Anthracene	ND	1500	1300		1	87	4.6	30-130	20	03/22/2010 1750
Benzo(a)anthracene	ND	1500	1400		1	89	4.9	30-130	20	03/22/2010 1750
Benzo(a)pyrene	ND	1500	1600		1	107	6.0	30-130	20	03/22/2010 1750
Benzo(b)fluoranthene	ND	1500	1400		1	94	8.7	30-130	20	03/22/2010 1750
Benzo(g,h,i)perylene	ND	1500	1400		1	93	5.1	30-130	20	03/22/2010 1750
Benzo(k)fluoranthene	ND	1500	1400		1	89	3.1	30-130	20	03/22/2010 1750
4-Bromophenyl phenyl ether	ND	1500	1400		1	89	9.4	30-130	20	03/22/2010 1750
Butyl benzyl phthalate	ND	1500	1400		1	93	4.3	30-130	20	03/22/2010 1750
Carbazole	ND	1500	1400		1	90	5.2	30-130	20	03/22/2010 1750
4-Chloro-3-methyl phenol	ND	1500	1300		1	86	6.5	30-130	20	03/22/2010 1750
4-Chloroaniline	ND	1500	390		1	26	16	10-130	40	03/22/2010 1750
bis(2-Chloroethoxy)methane	ND	1500	1100		1	72	16	30-130	20	03/22/2010 1750
bis(2-Chloroethyl)ether	ND	1500	960	+	1	63	28	30-130	20	03/22/2010 1750
bis(2-Chloroisopropyl)ether	ND	1500	1000	+	1	66	23	30-130	20	03/22/2010 1750
2-Chloronaphthalene	ND	1500	1200		1	82	18	30-130	20	03/22/2010 1750
2-Chlorophenol	ND	1500	1100	+	1	70	21	30-130	20	03/22/2010 1750
4-Chlorophenyl phenyl ether	ND	1500	1300		1	84	7.7	30-130	20	03/22/2010 1750
Chrysene	ND	1500	1400		1	89	4.9	30-130	20	03/22/2010 1750
Dibenzo(a,h)anthracene	ND	1500	1400		1	92	5.6	30-130	20	03/22/2010 1750
Dibenzofuran	ND	1500	1200		1	79	9.3	30-130	20	03/22/2010 1750
2,4-Dichlorophenol	ND	1500	1300		1	84	9.0	30-130	20	03/22/2010 1750
Diethylphthalate	ND	1500	1300		1	87	6.4	30-130	20	03/22/2010 1750
Dimethyl phthalate	ND	1500	1300		1	86	7.0	30-130	20	03/22/2010 1750
2,4-Dimethylphenol	ND	1500	1100		1	71	10	30-130	20	03/22/2010 1750
Di-n-butyl phthalate	ND	1500	1400		1	92	6.2	30-130	20	03/22/2010 1750
4,6-Dinitro-2-methylphenol	ND	7700	5500		1	72	1.4	30-130	20	03/22/2010 1750
2,4-Dinitrophenol	ND	7700	4500		1	59	0.89	30-130	20	03/22/2010 1750
2,4-Dinitrotoluene	ND	3100	2600		1	86	6.1	30-130	20	03/22/2010 1750
2,6-Dinitrotoluene	ND	3100	2700		1	87	8.1	30-130	20	03/22/2010 1750
Di-n-octylphthalate	ND	1500	1500		1	97	5.8	30-130	20	03/22/2010 1750
bis(2-Ethylhexyl)phthalate	ND	1500	1400		1	94	4.9	30-130	20	03/22/2010 1750
Fluoranthene	ND	1500	1300		1	85	3.0	30-130	20	03/22/2010 1750
Fluorene	ND	1500	1300		1	84	9.0	30-130	20	03/22/2010 1750
Hexachlorobenzene	ND	1500	1300		1	85	7.6	30-130	20	03/22/2010 1750
Hexachlorobutadiene	ND	1500	990		1	65	11	30-130	20	03/22/2010 1750
Hexachlorocyclopentadiene	ND	7700	2700		1	36	2.3	30-130	20	03/22/2010 1750
Hexachloroethane	ND	1500	840		1	55	15	30-130	20	03/22/2010 1750
Indeno(1,2,3-c,d)pyrene	ND	1500	1400		1	93	5.6	30-130	20	03/22/2010 1750
2-Methylnaphthalene	ND	1500	1100		1	71	12	30-130	20	03/22/2010 1750
2-Methylphenol	ND	1500	550	+	1	36	58	30-130	20	03/22/2010 1750
3 & 4-Methylphenol	ND	3100	2200		1	73	12	30-130	20	03/22/2010 1750
Naphthalene	ND	1500	1000		1	66	14	30-130	20	03/22/2010 1750

PQL = Practical quantitation limit
ND = Not detected at or above the MDL
P = The RPD between two GC columns exceeds 40%
J = Estimated result < PQL and ≥ MDL
N - Recovery is out of criteria
+ - RPD is out of criteria

Where applicable, all soil sample analysis are reported on a dry weight basis unless flagged with a "W"

Note: Calculations are performed before rounding to avoid round-off errors in calculated results

Semivolatile Organic Compounds by GC/MS - MSD

Sample ID: LC17068-003MD
Batch: 29722
Analytical Method: 8270D

Matrix: Solid
Prep Method: 3550C
Prep Date: 03/19/2010 1000

Parameter	Sample Amount (ug/kg)	Spike Amount (ug/kg)	Result (ug/kg)	Q	Dil	% Rec	% RPD	% Rec Limit	% RPD Limit	Analysis Date
2-Nitroaniline	ND	3100	2600		1	86	8.3	30-130	20	03/22/2010 1750
3-Nitroaniline	ND	3100	2300		1	75	6.2	30-130	20	03/22/2010 1750
4-Nitroaniline	ND	3100	2500		1	82	5.4	30-130	20	03/22/2010 1750
Nitrobenzene	ND	1500	1000	+	1	65	21	30-130	20	03/22/2010 1750
2-Nitrophenol	ND	3100	2200		1	71	19	30-130	20	03/22/2010 1750
4-Nitrophenol	ND	7700	6700		1	88	4.6	30-130	20	03/22/2010 1750
N-Nitrosodiphenylamine (Diphenylamine)	ND	1500	1400		1	91	7.0	30-130	20	03/22/2010 1750
Pentachlorophenol	ND	7700	6600		1	87	4.4	30-130	20	03/22/2010 1750
Phenanthrene	ND	1500	1300		1	87	4.9	30-130	20	03/22/2010 1750
Phenol	ND	1500	1100		1	72	17	30-130	20	03/22/2010 1750
Pyrene	ND	1500	1400		1	91	4.2	30-130	20	03/22/2010 1750
2,4,5-Trichlorophenol	ND	1500	1400		1	92	8.0	30-130	20	03/22/2010 1750
2,4,6-Trichlorophenol	ND	1500	1400		1	91	9.0	30-130	20	03/22/2010 1750

Surrogate	Q	% Rec	Acceptance Limit
2-Fluorobiphenyl		70	33-102
2-Fluorophenol		64	28-104
Nitrobenzene-d5		61	22-109
Phenol-d5		68	27-103
Terphenyl-d14		72	41-120
2,4,6-Tribromophenol		83	30-117

PQL = Practical quantitation limit
ND = Not detected at or above the MDL
P = The RPD between two GC columns exceeds 40%
J = Estimated result < PQL and ≥ MDL
N - Recovery is out of criteria
+ - RPD is out of criteria

Where applicable, all soil sample analysis are reported on a dry weight basis unless flagged with a "W"

Note: Calculations are performed before rounding to avoid round-off errors in calculated results

Semivolatile Organic Compounds by GC/MS - MB

Sample ID: LQ29896-001
Batch: 29896
Analytical Method: 8270D

Matrix: Solid
Prep Method: 3550C
Prep Date: 03/22/2010 1634

Parameter	Result	Q	Dil	PQL	MDL	Units	Analysis Date
1,1'-Biphenyl	ND		1	67	10	ug/kg	03/23/2010 2024
2,4,5-Trichlorophenol	ND		1	67	9.3	ug/kg	03/23/2010 2024
2,4,6-Trichlorophenol	ND		1	67	9.8	ug/kg	03/23/2010 2024
2,4-Dichlorophenol	ND		1	67	10	ug/kg	03/23/2010 2024
2,4-Dimethylphenol	ND		1	67	12	ug/kg	03/23/2010 2024
2,4-Dinitrophenol	ND		1	330	110	ug/kg	03/23/2010 2024
2,4-Dinitrotoluene	ND		1	130	18	ug/kg	03/23/2010 2024
2,6-Dinitrotoluene	ND		1	130	17	ug/kg	03/23/2010 2024
2-Chloronaphthalene	ND		1	67	11	ug/kg	03/23/2010 2024
2-Chlorophenol	ND		1	67	9.2	ug/kg	03/23/2010 2024
2-Methylnaphthalene	ND		1	67	9.9	ug/kg	03/23/2010 2024
2-Methylphenol	ND		1	67	6.0	ug/kg	03/23/2010 2024
2-Nitroaniline	ND		1	130	23	ug/kg	03/23/2010 2024
2-Nitrophenol	ND		1	130	18	ug/kg	03/23/2010 2024
3 & 4-Methylphenol	ND		1	130	12	ug/kg	03/23/2010 2024
3,3'-Dichlorobenzidine	ND		1	330	36	ug/kg	03/23/2010 2024
3-Nitroaniline	ND		1	130	39	ug/kg	03/23/2010 2024
4,6-Dinitro-2-methylphenol	ND		1	330	130	ug/kg	03/23/2010 2024
4-Bromophenyl phenyl ether	ND		1	67	9.8	ug/kg	03/23/2010 2024
4-Chloro-3-methyl phenol	ND		1	67	8.4	ug/kg	03/23/2010 2024
4-Chloroaniline	ND		1	67	6.8	ug/kg	03/23/2010 2024
4-Chlorophenyl phenyl ether	ND		1	67	11	ug/kg	03/23/2010 2024
4-Nitroaniline	ND		1	130	19	ug/kg	03/23/2010 2024
4-Nitrophenol	ND		1	330	96	ug/kg	03/23/2010 2024
Acenaphthene	ND		1	67	11	ug/kg	03/23/2010 2024
Acenaphthylene	ND		1	67	10	ug/kg	03/23/2010 2024
Acetophenone	ND		1	67	18	ug/kg	03/23/2010 2024
Anthracene	ND		1	67	7.4	ug/kg	03/23/2010 2024
Atrazine	ND		1	67	17	ug/kg	03/23/2010 2024
Benzaldehyde	ND		1	67	17	ug/kg	03/23/2010 2024
Benzo(a)anthracene	ND		1	67	8.8	ug/kg	03/23/2010 2024
Benzo(a)pyrene	ND		1	67	9.3	ug/kg	03/23/2010 2024
Benzo(b)fluoranthene	ND		1	67	9.6	ug/kg	03/23/2010 2024
Benzo(g,h,i)perylene	ND		1	67	12	ug/kg	03/23/2010 2024
Benzo(k)fluoranthene	ND		1	67	9.5	ug/kg	03/23/2010 2024
bis(2-Chloroethoxy)methane	ND		1	67	10	ug/kg	03/23/2010 2024
bis(2-Chloroethyl)ether	ND		1	67	9.2	ug/kg	03/23/2010 2024
bis(2-Chloroisopropyl)ether	ND		1	67	11	ug/kg	03/23/2010 2024
bis(2-Ethylhexyl)phthalate	ND		1	67	22	ug/kg	03/23/2010 2024
Butyl benzyl phthalate	ND		1	130	44	ug/kg	03/23/2010 2024
Caprolactam	ND		1	67	17	ug/kg	03/23/2010 2024
Carbazole	ND		1	67	14	ug/kg	03/23/2010 2024
Chrysene	ND		1	67	11	ug/kg	03/23/2010 2024
Di-n-butyl phthalate	ND		1	67	22	ug/kg	03/23/2010 2024

PQL = Practical quantitation limit
ND = Not detected at or above the MDL
P = The RPD between two GC columns exceeds 40%
J = Estimated result < PQL and ≥ MDL
N - Recovery is out of criteria
+ - RPD is out of criteria

Where applicable, all soil sample analysis are reported on a dry weight basis unless flagged with a "W"

Note: Calculations are performed before rounding to avoid round-off errors in calculated results

Semivolatile Organic Compounds by GC/MS - MB

Sample ID: LQ29896-001
Batch: 29896
Analytical Method: 8270D

Matrix: Solid
Prep Method: 3550C
Prep Date: 03/22/2010 1634

Parameter	Result	Q	Dil	PQL	MDL	Units	Analysis Date
Di-n-octylphthalate	ND		1	67	32	ug/kg	03/23/2010 2024
Dibenzo(a,h)anthracene	ND		1	67	9.1	ug/kg	03/23/2010 2024
Dibenzofuran	ND		1	67	10	ug/kg	03/23/2010 2024
Diethylphthalate	ND		1	67	22	ug/kg	03/23/2010 2024
Dimethyl phthalate	ND		1	67	22	ug/kg	03/23/2010 2024
Fluoranthene	ND		1	67	11	ug/kg	03/23/2010 2024
Fluorene	ND		1	67	9.0	ug/kg	03/23/2010 2024
Hexachlorobenzene	ND		1	67	15	ug/kg	03/23/2010 2024
Hexachlorobutadiene	ND		1	67	11	ug/kg	03/23/2010 2024
Hexachlorocyclopentadiene	ND		1	330	25	ug/kg	03/23/2010 2024
Hexachloroethane	ND		1	67	8.9	ug/kg	03/23/2010 2024
Indeno(1,2,3-c,d)pyrene	ND		1	67	9.7	ug/kg	03/23/2010 2024
Isophorone	ND		1	67	7.4	ug/kg	03/23/2010 2024
N-Nitrosodi-n-propylamine	ND		1	67	13	ug/kg	03/23/2010 2024
N-Nitrosodiphenylamine (Diphenylamine)	ND		1	67	8.3	ug/kg	03/23/2010 2024
Naphthalene	ND		1	67	10	ug/kg	03/23/2010 2024
Nitrobenzene	ND		1	67	5.4	ug/kg	03/23/2010 2024
Pentachlorophenol	ND		1	330	140	ug/kg	03/23/2010 2024
Phenanthrene	ND		1	67	9.0	ug/kg	03/23/2010 2024
Phenol	ND		1	67	9.1	ug/kg	03/23/2010 2024
Pyrene	ND		1	67	13	ug/kg	03/23/2010 2024

Surrogate	Q	% Rec	Acceptance Limit
2,4,6-Tribromophenol		40	30-117
2-Fluorobiphenyl		41	33-102
2-Fluorophenol		51	28-104
Nitrobenzene-d5		45	22-109
Phenol-d5		47	27-103
Terphenyl-d14		46	41-120

PQL = Practical quantitation limit
ND = Not detected at or above the MDL
P = The RPD between two GC columns exceeds 40%
J = Estimated result < PQL and ≥ MDL
N - Recovery is out of criteria
+ - RPD is out of criteria

Where applicable, all soil sample analysis are reported on a dry weight basis unless flagged with a "W"

Note: Calculations are performed before rounding to avoid round-off errors in calculated results

Semivolatile Organic Compounds by GC/MS - LCS

Sample ID: LQ29896-002
Batch: 29896
Analytical Method: 8270D

Matrix: Solid
Prep Method: 3550C
Prep Date: 03/22/2010 1634

Parameter	Spike Amount (ug/kg)	Result (ug/kg)	Q	Dil	% Rec	% Rec Limit	Analysis Date
2,4,5-Trichlorophenol	1300	780		1	59	30-130	03/23/2010 2044
2,4,6-Trichlorophenol	1300	680		1	51	30-130	03/23/2010 2044
2,4-Dichlorophenol	1300	760		1	57	30-130	03/23/2010 2044
2,4-Dimethylphenol	1300	660		1	49	30-130	03/23/2010 2044
2,4-Dinitrophenol	6700	2900		1	43	30-130	03/23/2010 2044
2,4-Dinitrotoluene	2700	1500		1	56	30-130	03/23/2010 2044
2,6-Dinitrotoluene	2700	1500		1	56	30-130	03/23/2010 2044
2-Chloronaphthalene	1300	710		1	53	30-130	03/23/2010 2044
2-Chlorophenol	1300	670		1	50	30-130	03/23/2010 2044
2-Methylnaphthalene	1300	690		1	52	30-130	03/23/2010 2044
2-Methylphenol	1300	600		1	45	30-130	03/23/2010 2044
2-Nitroaniline	2700	1500		1	57	30-130	03/23/2010 2044
2-Nitrophenol	2700	1400		1	53	30-130	03/23/2010 2044
3 & 4-Methylphenol	2700	1400		1	53	30-130	03/23/2010 2044
3-Nitroaniline	2700	1300		1	49	30-130	03/23/2010 2044
4,6-Dinitro-2-methylphenol	6700	3100		1	47	30-130	03/23/2010 2044
4-Bromophenyl phenyl ether	1300	770		1	58	30-130	03/23/2010 2044
4-Chloro-3-methyl phenol	1300	740		1	55	30-130	03/23/2010 2044
4-Chloroaniline	1300	160		1	12	10-130	03/23/2010 2044
4-Chlorophenyl phenyl ether	1300	730		1	55	30-130	03/23/2010 2044
4-Nitroaniline	2700	1500		1	58	30-130	03/23/2010 2044
4-Nitrophenol	6700	4200		1	63	30-130	03/23/2010 2044
Acenaphthene	1300	730		1	55	30-130	03/23/2010 2044
Acenaphthylene	1300	760		1	57	30-130	03/23/2010 2044
Anthracene	1300	760		1	57	30-130	03/23/2010 2044
Benzo(a)anthracene	1300	840		1	63	30-130	03/23/2010 2044
Benzo(a)pyrene	1300	1000		1	75	30-130	03/23/2010 2044
Benzo(b)fluoranthene	1300	880		1	66	30-130	03/23/2010 2044
Benzo(g,h,i)perylene	1300	900		1	68	30-130	03/23/2010 2044
Benzo(k)fluoranthene	1300	840		1	63	30-130	03/23/2010 2044
bis(2-Chloroethoxy)methane	1300	740		1	55	30-130	03/23/2010 2044
bis(2-Chloroethyl)ether	1300	720		1	54	30-130	03/23/2010 2044
bis(2-Chloroisopropyl)ether	1300	730		1	55	30-130	03/23/2010 2044
bis(2-Ethylhexyl)phthalate	1300	860		1	64	30-130	03/23/2010 2044
Butyl benzyl phthalate	1300	860		1	64	30-130	03/23/2010 2044
Carbazole	1300	810		1	61	30-130	03/23/2010 2044
Chrysene	1300	860		1	65	30-130	03/23/2010 2044
Di-n-butyl phthalate	1300	810		1	61	30-130	03/23/2010 2044
Di-n-octylphthalate	1300	870		1	65	30-130	03/23/2010 2044
Dibenzo(a,h)anthracene	1300	860		1	64	30-130	03/23/2010 2044
Dibenzofuran	1300	720		1	54	30-130	03/23/2010 2044
Diethylphthalate	1300	780		1	59	30-130	03/23/2010 2044
Dimethyl phthalate	1300	760		1	57	30-130	03/23/2010 2044
Fluoranthene	1300	780		1	59	30-130	03/23/2010 2044

PQL = Practical quantitation limit
ND = Not detected at or above the MDL
P = The RPD between two GC columns exceeds 40%
J = Estimated result < PQL and ≥ MDL
N - Recovery is out of criteria
+ - RPD is out of criteria

Where applicable, all soil sample analysis are reported on a dry weight basis unless flagged with a "W"

Note: Calculations are performed before rounding to avoid round-off errors in calculated results

Semivolatile Organic Compounds by GC/MS - LCS

Sample ID: LQ29896-002
Batch: 29896
Analytical Method: 8270D

Matrix: Solid
Prep Method: 3550C
Prep Date: 03/22/2010 1634

Parameter	Spike Amount (ug/kg)	Result (ug/kg)	Q	Dil	% Rec	% Rec Limit	Analysis Date
Fluorene	1300	740		1	55	30-130	03/23/2010 2044
Hexachlorobenzene	1300	760		1	57	30-130	03/23/2010 2044
Hexachlorobutadiene	1300	670		1	50	30-130	03/23/2010 2044
Hexachlorocyclopentadiene	6700	3000		1	46	30-130	03/23/2010 2044
Hexachloroethane	1300	650		1	49	30-130	03/23/2010 2044
Indeno(1,2,3-c,d)pyrene	1300	890		1	67	30-130	03/23/2010 2044
N-Nitrosodiphenylamine (Diphenylamine)	1300	780		1	58	30-130	03/23/2010 2044
Naphthalene	1300	690		1	51	30-130	03/23/2010 2044
Nitrobenzene	1300	750		1	56	30-130	03/23/2010 2044
Pentachlorophenol	6700	3500		1	53	30-130	03/23/2010 2044
Phenanthrene	1300	760		1	57	30-130	03/23/2010 2044
Phenol	1300	750		1	56	30-130	03/23/2010 2044
Pyrene	1300	850		1	64	30-130	03/23/2010 2044

Surrogate	Q	% Rec	Acceptance Limit
2,4,6-Tribromophenol		50	30-117
2-Fluorobiphenyl		51	33-102
2-Fluorophenol		53	28-104
Nitrobenzene-d5		52	22-109
Phenol-d5		55	27-103
Terphenyl-d14		51	41-120

PQL = Practical quantitation limit
ND = Not detected at or above the MDL
P = The RPD between two GC columns exceeds 40%
J = Estimated result < PQL and ≥ MDL
N - Recovery is out of criteria
+ - RPD is out of criteria
Where applicable, all soil sample analysis are reported on a dry weight basis unless flagged with a "W"

Note: Calculations are performed before rounding to avoid round-off errors in calculated results

Semivolatile Organic Compounds by GC/MS - LCSD

Sample ID: LQ29896-003
Batch: 29896
Analytical Method: 8270D

Matrix: Solid
Prep Method: 3550C
Prep Date: 03/22/2010 1634

Parameter	Spike Amount (ug/kg)	Result (ug/kg)	Q	Dil	% Rec	% RPD	% Rec Limit	% RPD Limit	Analysis Date
2,4,5-Trichlorophenol	1300	800		1	60	1.9	30-130	40	03/23/2010 2103
2,4,6-Trichlorophenol	1300	690		1	52	0.29	30-130	40	03/23/2010 2103
2,4-Dichlorophenol	1300	770		1	58	1.2	30-130	40	03/23/2010 2103
2,4-Dimethylphenol	1300	630		1	48	3.5	30-130	40	03/23/2010 2103
2,4-Dinitrophenol	6700	3300		1	49	13	30-130	40	03/23/2010 2103
2,4-Dinitrotoluene	2700	1500		1	56	0.49	30-130	40	03/23/2010 2103
2,6-Dinitrotoluene	2700	1500		1	56	0.74	30-130	40	03/23/2010 2103
2-Chloronaphthalene	1300	760		1	57	7.4	30-130	40	03/23/2010 2103
2-Chlorophenol	1300	730		1	55	7.9	30-130	40	03/23/2010 2103
2-Methylnaphthalene	1300	670		1	51	2.9	30-130	40	03/23/2010 2103
2-Methylphenol	1300	640		1	48	6.2	30-130	40	03/23/2010 2103
2-Nitroaniline	2700	1500		1	58	1.4	30-130	40	03/23/2010 2103
2-Nitrophenol	2700	1400		1	52	2.2	30-130	40	03/23/2010 2103
3 & 4-Methylphenol	2700	1500		1	57	8.1	30-130	40	03/23/2010 2103
3-Nitroaniline	2700	1300		1	50	1.6	30-130	40	03/23/2010 2103
4,6-Dinitro-2-methylphenol	6700	3300		1	50	6.1	30-130	40	03/23/2010 2103
4-Bromophenyl phenyl ether	1300	770		1	58	0.47	30-130	40	03/23/2010 2103
4-Chloro-3-methyl phenol	1300	760		1	57	2.8	30-130	40	03/23/2010 2103
4-Chloroaniline	1300	190		1	14	15	10-130	40	03/23/2010 2103
4-Chlorophenyl phenyl ether	1300	720		1	54	2.5	30-130	40	03/23/2010 2103
4-Nitroaniline	2700	1500		1	57	2.1	30-130	40	03/23/2010 2103
4-Nitrophenol	6700	4300		1	64	1.5	30-130	40	03/23/2010 2103
Acenaphthene	1300	700		1	53	4.0	30-130	40	03/23/2010 2103
Acenaphthylene	1300	730		1	55	3.8	30-130	40	03/23/2010 2103
Anthracene	1300	750		1	56	1.5	30-130	40	03/23/2010 2103
Benzo(a)anthracene	1300	810		1	61	3.7	30-130	40	03/23/2010 2103
Benzo(a)pyrene	1300	980		1	74	1.8	30-130	40	03/23/2010 2103
Benzo(b)fluoranthene	1300	850		1	64	3.2	30-130	40	03/23/2010 2103
Benzo(g,h,i)perylene	1300	880		1	66	2.4	30-130	40	03/23/2010 2103
Benzo(k)fluoranthene	1300	830		1	62	0.72	30-130	40	03/23/2010 2103
bis(2-Chloroethoxy)methane	1300	700		1	53	4.9	30-130	40	03/23/2010 2103
bis(2-Chloroethyl)ether	1300	730		1	55	1.7	30-130	40	03/23/2010 2103
bis(2-Chloroisopropyl)ether	1300	730		1	55	0.63	30-130	40	03/23/2010 2103
bis(2-Ethylhexyl)phthalate	1300	840		1	63	2.1	30-130	40	03/23/2010 2103
Butyl benzyl phthalate	1300	840		1	63	1.4	30-130	40	03/23/2010 2103
Carbazole	1300	800		1	60	1.4	30-130	40	03/23/2010 2103
Chrysene	1300	820		1	61	5.2	30-130	40	03/23/2010 2103
Di-n-butyl phthalate	1300	800		1	60	1.9	30-130	40	03/23/2010 2103
Di-n-octylphthalate	1300	860		1	65	0.75	30-130	40	03/23/2010 2103
Dibenzo(a,h)anthracene	1300	840		1	63	2.7	30-130	40	03/23/2010 2103
Dibenzofuran	1300	700		1	52	3.9	30-130	40	03/23/2010 2103
Diethylphthalate	1300	760		1	57	2.6	30-130	40	03/23/2010 2103
Dimethyl phthalate	1300	750		1	56	1.3	30-130	40	03/23/2010 2103
Fluoranthene	1300	770		1	57	2.3	30-130	40	03/23/2010 2103

PQL = Practical quantitation limit
ND = Not detected at or above the MDL
P = The RPD between two GC columns exceeds 40%
J = Estimated result < PQL and ≥ MDL
N - Recovery is out of criteria
+ - RPD is out of criteria

Where applicable, all soil sample analysis are reported on a dry weight basis unless flagged with a "W"

Note: Calculations are performed before rounding to avoid round-off errors in calculated results

Semivolatile Organic Compounds by GC/MS - LCSD

Sample ID: LQ29896-003
Batch: 29896
Analytical Method: 8270D

Matrix: Solid
Prep Method: 3550C
Prep Date: 03/22/2010 1634

Parameter	Spike Amount (ug/kg)	Result (ug/kg)	Q	Dil	% Rec	% RPD	% Rec Limit	% RPD Limit	Analysis Date
Fluorene	1300	730		1	55	1.1	30-130	40	03/23/2010 2103
Hexachlorobenzene	1300	740		1	56	2.5	30-130	40	03/23/2010 2103
Hexachlorobutadiene	1300	630		1	47	6.4	30-130	40	03/23/2010 2103
Hexachlorocyclopentadiene	6700	2800		1	42	8.5	30-130	40	03/23/2010 2103
Hexachloroethane	1300	640		1	48	1.3	30-130	40	03/23/2010 2103
Indeno(1,2,3-c,d)pyrene	1300	860		1	65	3.5	30-130	40	03/23/2010 2103
N-Nitrosodiphenylamine (Diphenylamine)	1300	770		1	58	0.90	30-130	40	03/23/2010 2103
Naphthalene	1300	640		1	48	6.1	30-130	40	03/23/2010 2103
Nitrobenzene	1300	790		1	59	5.7	30-130	40	03/23/2010 2103
Pentachlorophenol	6700	3700		1	56	4.7	30-130	40	03/23/2010 2103
Phenanthrene	1300	760		1	57	0.92	30-130	40	03/23/2010 2103
Phenol	1300	750		1	56	0.068	30-130	40	03/23/2010 2103
Pyrene	1300	810		1	61	4.5	30-130	40	03/23/2010 2103

Surrogate	Q	% Rec	Acceptance Limit
2,4,6-Tribromophenol		49	30-117
2-Fluorobiphenyl		45	33-102
2-Fluorophenol		50	28-104
Nitrobenzene-d5		50	22-109
Phenol-d5		53	27-103
Terphenyl-d14		46	41-120

PQL = Practical quantitation limit
ND = Not detected at or above the MDL
P = The RPD between two GC columns exceeds 40%
J = Estimated result < PQL and ≥ MDL
N - Recovery is out of criteria
+ - RPD is out of criteria

Where applicable, all soil sample analysis are reported on a dry weight basis unless flagged with a "W"

Note: Calculations are performed before rounding to avoid round-off errors in calculated results

RCRA Metals - MB

Sample ID: LQ29899-001
Batch: 29899
Analytical Method: 6010C

Matrix: Solid
Prep Method: 3050B
Prep Date: 03/22/2010 1730

Parameter	Result	Q	Dil	PQL	MDL	Units	Analysis Date
Arsenic	ND		1	0.50	0.19	mg/kg	03/23/2010 2226
Barium	ND		1	1.3	0.091	mg/kg	03/23/2010 2226
Cadmium	**0.024**	**J**	**1**	**0.10**	**0.011**	**mg/kg**	**03/23/2010 2226**
Chromium	**0.10**	**J**	**1**	**0.25**	**0.051**	**mg/kg**	**03/23/2010 2226**
Lead	ND		1	0.50	0.093	mg/kg	03/23/2010 2226
Selenium	**0.38**	**J**	**1**	**0.50**	**0.17**	**mg/kg**	**03/23/2010 2226**
Silver	ND		1	0.25	0.042	mg/kg	03/23/2010 2226

PQL = Practical quantitation limit
ND = Not detected at or above the MDL
P = The RPD between two GC columns exceeds 40%
J = Estimated result < PQL and ≥ MDL
N - Recovery is out of criteria
+ - RPD is out of criteria

Where applicable, all soil sample analysis are reported on a dry weight basis unless flagged with a "W"

Note: Calculations are performed before rounding to avoid round-off errors in calculated results

RCRA Metals - LCS

Sample ID: LQ29899-002
Batch: 29899
Analytical Method: 6010C

Matrix: Solid
Prep Method: 3050B
Prep Date: 03/22/2010 1730

Parameter	Spike Amount (mg/kg)	Result (mg/kg)	Q	Dil	% Rec	% Rec Limit	Analysis Date
Arsenic	250	240		1	95	80-120	03/23/2010 2231
Barium	500	470		1	95	80-120	03/23/2010 2231
Cadmium	50	50		1	99	80-120	03/23/2010 2231
Chromium	250	260		1	105	80-120	03/23/2010 2231
Lead	250	250		1	99	80-120	03/23/2010 2231
Selenium	50	49		1	99	80-120	03/23/2010 2231
Silver	250	230		1	93	80-120	03/23/2010 2231

PQL = Practical quantitation limit
ND = Not detected at or above the MDL
P = The RPD between two GC columns exceeds 40%
J = Estimated result < PQL and ≥ MDL
N - Recovery is out of criteria
+ - RPD is out of criteria

Where applicable, all soil sample analysis are reported on a dry weight basis unless flagged with a "W"

Note: Calculations are performed before rounding to avoid round-off errors in calculated results

RCRA Metals - LCSD

Sample ID: LQ29899-003
Batch: 29899
Analytical Method: 6010C

Matrix: Solid
Prep Method: 3050B
Prep Date: 03/22/2010 1730

Parameter	Spike Amount (mg/kg)	Result (mg/kg)	Q	Dil	% Rec	% RPD	% Rec Limit	% RPD Limit	Analysis Date
Arsenic	250	240		1	95	0.28	80-120	20	03/23/2010 2236
Barium	500	480		1	95	0.50	80-120	20	03/23/2010 2236
Cadmium	50	50		1	99	0.054	80-120	20	03/23/2010 2236
Chromium	250	260		1	105	0.18	80-120	20	03/23/2010 2236
Lead	250	250		1	99	0.29	80-120	20	03/23/2010 2236
Selenium	50	49		1	99	0.26	80-120	20	03/23/2010 2236
Silver	250	230		1	93	0.072	80-120	20	03/23/2010 2236

PQL = Practical quantitation limit
ND = Not detected at or above the MDL
P = The RPD between two GC columns exceeds 40%
J = Estimated result < PQL and ≥ MDL
N - Recovery is out of criteria
+ - RPD is out of criteria

Where applicable, all soil sample analysis are reported on a dry weight basis unless flagged with a "W"

Note: Calculations are performed before rounding to avoid round-off errors in calculated results

RCRA Metals - MS

Sample ID: LC17068-001MS
Batch: 29899
Analytical Method: 6010C

Matrix: Solid
Prep Method: 3050B
Prep Date: 03/22/2010 1730

Parameter	Sample Amount (mg/kg)	Spike Amount (mg/kg)	Result (mg/kg)	Q	Dil	% Rec	% Rec Limit	Analysis Date
Arsenic	0.56	290	270		1	93	75-125	03/23/2010 2245
Barium	10	580	550		1	93	75-125	03/23/2010 2245
Cadmium	0.36	58	57		1	97	75-125	03/23/2010 2245
Chromium	5.9	290	300		1	100	75-125	03/23/2010 2245
Lead	43	290	310		1	94	75-125	03/23/2010 2245
Selenium	0.61	58	58		1	98	75-125	03/23/2010 2245
Silver	ND	290	260		1	91	75-125	03/23/2010 2245

PQL = Practical quantitation limit
ND = Not detected at or above the MDL
P = The RPD between two GC columns exceeds 40%
J = Estimated result < PQL and ≥ MDL
N - Recovery is out of criteria
+ - RPD is out of criteria

Where applicable, all soil sample analysis are reported on a dry weight basis unless flagged with a "W"

Note: Calculations are performed before rounding to avoid round-off errors in calculated results

RCRA Metals - MSD

Sample ID: LC17068-001MD
Batch: 29899
Analytical Method: 6010C

Matrix: Solid
Prep Method: 3050B
Prep Date: 03/22/2010 1730

Parameter	Sample Amount (mg/kg)	Spike Amount (mg/kg)	Result (mg/kg)	Q	Dil	% Rec	% RPD	% Rec Limit	% RPD Limit	Analysis Date
Arsenic	0.56	260	260		1	99	1.6	75-125	20	03/23/2010 2250
Barium	10	530	530		1	98	1.2	75-125	20	03/23/2010 2250
Cadmium	0.36	53	56		1	105	2.8	75-125	20	03/23/2010 2250
Chromium	5.9	260	280		1	105	0.068	75-125	20	03/23/2010 2250
Lead	43	260	310		1	99	1.7	75-125	20	03/23/2010 2250
Selenium	0.61	53	56		1	105	2.0	75-125	20	03/23/2010 2250
Silver	ND	260	260		1	98	2.5	75-125	20	03/23/2010 2250

PQL = Practical quantitation limit
ND = Not detected at or above the MDL
P = The RPD between two GC columns exceeds 40%
J = Estimated result < PQL and ≥ MDL
N - Recovery is out of criteria
+ - RPD is out of criteria

Where applicable, all soil sample analysis are reported on a dry weight basis unless flagged with a "W"

Note: Calculations are performed before rounding to avoid round-off errors in calculated results

RCRA Metals - MS

Sample ID: LC17068-002MS
Batch: 29899
Analytical Method: 6010C

Matrix: Solid
Prep Method: 3050B
Prep Date: 03/22/2010 1730

Parameter	Sample Amount (mg/kg)	Spike Amount (mg/kg)	Result (mg/kg)	Q	Dil	% Rec	% Rec Limit	Analysis Date
Arsenic	0.70	260	250		1	98	75-125	03/23/2010 2303
Barium	8.1	510	510		1	99	75-125	03/23/2010 2303
Cadmium	0.045	51	53		1	104	75-125	03/23/2010 2303
Chromium	3.4	260	270		1	104	75-125	03/23/2010 2303
Lead	5.4	260	270		1	102	75-125	03/23/2010 2303
Selenium	0.51	51	54		1	105	75-125	03/23/2010 2303
Silver	ND	260	250		1	96	75-125	03/23/2010 2303

PQL = Practical quantitation limit
ND = Not detected at or above the MDL
P = The RPD between two GC columns exceeds 40%
J = Estimated result < PQL and ≥ MDL
N - Recovery is out of criteria
+ - RPD is out of criteria

Where applicable, all soil sample analysis are reported on a dry weight basis unless flagged with a "W"

Note: Calculations are performed before rounding to avoid round-off errors in calculated results

RCRA Metals - MB

Sample ID: LQ29905-001
Batch: 29905
Analytical Method: 7471B

Matrix: Solid
Prep Method: 7471B
Prep Date: 03/22/2010 2050

Parameter	Result	Q	Dil	PQL	MDL	Units	Analysis Date
Mercury	ND		1	0.083	0.0059	mg/kg	03/22/2010 2325

PQL = Practical quantitation limit
ND = Not detected at or above the MDL
P = The RPD between two GC columns exceeds 40%
J = Estimated result < PQL and ≥ MDL
N - Recovery is out of criteria
+ - RPD is out of criteria

Where applicable, all soil sample analysis are reported on a dry weight basis unless flagged with a "W"

Note: Calculations are performed before rounding to avoid round-off errors in calculated results

RCRA Metals - LCS

Sample ID: LQ29905-002
Batch: 29905
Analytical Method: 7471B

Matrix: Solid
Prep Method: 7471B
Prep Date: 03/22/2010 2050

Parameter	Spike Amount (mg/kg)	Result (mg/kg)	Q	Dil	% Rec	% Rec Limit	Analysis Date
Mercury	0.83	0.80		1	96	85-115	03/22/2010 2327

PQL = Practical quantitation limit
ND = Not detected at or above the MDL
P = The RPD between two GC columns exceeds 40%
J = Estimated result < PQL and ≥ MDL
N - Recovery is out of criteria
+ - RPD is out of criteria

Where applicable, all soil sample analysis are reported on a dry weight basis unless flagged with a "W"

Note: Calculations are performed before rounding to avoid round-off errors in calculated results

RCRA Metals - LCSD

Sample ID: LQ29905-003
Batch: 29905
Analytical Method: 7471B

Matrix: Solid
Prep Method: 7471B
Prep Date: 03/22/2010 2050

Parameter	Spike Amount (mg/kg)	Result (mg/kg)	Q	Dil	% Rec	% RPD	% Rec Limit	% RPD Limit	Analysis Date
Mercury	0.83	0.80		1	96	0.10	85-115	20	03/22/2010 2329

PQL = Practical quantitation limit
ND = Not detected at or above the MDL
P = The RPD between two GC columns exceeds 40%
J = Estimated result < PQL and ≥ MDL
N - Recovery is out of criteria
+ - RPD is out of criteria

Where applicable, all soil sample analysis are reported on a dry weight basis unless flagged with a "W"

Note: Calculations are performed before rounding to avoid round-off errors in calculated results

RCRA Metals - MS

Sample ID: LC17068-001MS
Batch: 29905
Analytical Method: 7471B

Matrix: Solid
Prep Method: 7471B
Prep Date: 03/22/2010 2050

Parameter	Sample Amount (mg/kg)	Spike Amount (mg/kg)	Result (mg/kg)	Q	Dil	% Rec	% Rec Limit	Analysis Date
Mercury	0.029	0.93	0.99		1	103	85-115	03/22/2010 2338

PQL = Practical quantitation limit
ND = Not detected at or above the MDL
P = The RPD between two GC columns exceeds 40%
J = Estimated result < PQL and ≥ MDL
N - Recovery is out of criteria
+ - RPD is out of criteria

Where applicable, all soil sample analysis are reported on a dry weight basis unless flagged with a "W"

Note: Calculations are performed before rounding to avoid round-off errors in calculated results

RCRA Metals - MSD

Sample ID: LC17068-001MD
Batch: 29905
Analytical Method: 7471B

Matrix: Solid
Prep Method: 7471B
Prep Date: 03/22/2010 2050

Parameter	Sample Amount (mg/kg)	Spike Amount (mg/kg)	Result (mg/kg)	Q	Dil	% Rec	% RPD	% Rec Limit	% RPD Limit	Analysis Date
Mercury	0.029	0.93	1.0		1	104	0.96	85-115	20	03/22/2010 2340

PQL = Practical quantitation limit
ND = Not detected at or above the MDL
P = The RPD between two GC columns exceeds 40%
J = Estimated result < PQL and ≥ MDL
N - Recovery is out of criteria
+ - RPD is out of criteria

Where applicable, all soil sample analysis are reported on a dry weight basis unless flagged with a "W"

Note: Calculations are performed before rounding to avoid round-off errors in calculated results

RCRA Metals - MS

Sample ID: LC17068-002MS
Batch: 29905
Analytical Method: 7471B

Matrix: Solid
Prep Method: 7471B
Prep Date: 03/22/2010 2050

Parameter	Sample Amount (mg/kg)	Spike Amount (mg/kg)	Result (mg/kg)	Q	Dil	% Rec	% Rec Limit	Analysis Date
Mercury	0.028	0.81	0.90		1	107	85-115	03/22/2010 2347

PQL = Practical quantitation limit
ND = Not detected at or above the MDL
P = The RPD between two GC columns exceeds 40%
J = Estimated result < PQL and ≥ MDL
N - Recovery is out of criteria
+ - RPD is out of criteria

Where applicable, all soil sample analysis are reported on a dry weight basis unless flagged with a "W"

Note: Calculations are performed before rounding to avoid round-off errors in calculated results

SHEALY ENVIRONMENTAL SERVICES, INC.

SHEALY Chain of Custody Record

SHEALY ENVIRONMENTAL SERVICES, INC.
106 Vantage Point Drive
West Columbia, South Carolina 29172
Telephone No. (803) 791-9700 Fax No. (803) 791-9111

Number 104847

Client: ARCADIS
Report to Contact: Shelley Gibbons
Telephone No. / Fax No. / E-mail: 919 854-1282 / 919 854-5448
Quote No.: 11954
Address: 801 Corporate Center Dr Suite 300
Sampler's Signature: X
Waybill No.:
Page 1 of 2
City: Raleigh
State: NC
Zip Code: 27607
Printed Name: Robert B. Sheely
Analysis (Attach list if more space is needed.)
Project Name: SWMU 39 Hunter Stewart
Project No.: G109HAFS.F39A.DG0FI
P.O. No.:
Lot No.: LC17068

Sample ID / Description (Containers for each sample may be combined on one line.)	Date	Time	Composite (C) / Grab (G)	Matrix: Aqueous	Solid	Non-Aqueous	No. of Containers by Preservative Type: Unpres.	HNO3	HCl	NaOH	5035 Kit	VOC (8260B)	SVOC (8270)	Metals (6010)	Remarks / Cooler I.D.
F39SB009 (0.5-1)	3/15/10	1337	G		X		2				1	X	X	X	
F39SB009 (3.0-3.5)	3/15/10	1355	G		X		2				1	X	X	X	
F39SB001 (4.5-5.5)	3/15/10	1530	G		X		2				1	X	X	X	
F39SB003 (4-5)	3/15/10	1610	G		X		2				1	X	X	X	
F39SB004 (4-5)	3/15/10	1645	G		X		2				1	X	X	X	
F39SB005 (4-5)	3/15/10	1700	G		X		2				1	X	X	X	
F39SB006 (4-5)	3/15/10	1725	G		X		2				1	X	X	X	
F39SB007 (4-5)	3/15/10	1800	G		X		2				1	X	X	X	
F39SB010 (0.5-1.0)	3/16/10	0840	G		X		2				1	X	X	X	
F39SB010 (3.0-3.5)	3/16/10	0850	G		X		2				1	X	X	X	

Possible Hazard Identification: ☐ Non-Hazard ☐ Flammable ☐ Skin Irritant ☐ Poison ☒ Unknown

Sample Disposal: ☐ Return to Client ☒ Disposal by Lab

Note: All samples are retained for six weeks from receipt unless other arrangements are made.

Turn Around Time Required (Prior lab approval required for expedited TAT.): ☒ Standard ☐ Rush (Specify)

QC Requirements (Specify):

1. Relinquished by: Robert B. Sheely	Date: 3/16/10	Time: 1300	1. Received by: Fed Ex	Date:	Time:
2. Relinquished by:	Date:	Time:	2. Received by:	Date:	Time:
3. Relinquished by: FEDEX	Date: 3-17-10	Time: 0900	3. Laboratory received by:	Date: 3/17/10	Time: 0900

Comments:

LAB USE ONLY
Received on ice (Circle) Yes No Ice Pack
Receipt Temp: 1.0 °C

DISTRIBUTION: WHITE & YELLOW-Return to laboratory with Sample(s); PINK-Field/Client Copy

Document Number: F-AD-012 Effective Date: 08-01-02

SHEALY **Chain of Custody Record**

SHEALY ENVIRONMENTAL SERVICES, INC.
106 Vantage Point Drive
West Columbia, South Carolina 29172
Telephone No. (803) 791-9700 Fax No. (803) 791-9111

Number 104848

Client: ARCADIS
Address: 801 Corporate Center Dr Suite 300
City: Raleigh State: NC Zip Code: 27607
Project Name: SWMU 39 Hunter Stewart
Project No.: GP09HAFS.F39A.DG0FI
P.O. No.:
Report to Contact: Shelley Gibbons
Sampler's Signature: X [signature]
Printed Name: Robert B. Shealy
Telephone No. / Fax No. / E-mail: 919 854-1282 / 919 854-5448
Waybill No.:
Quote No.: 11954
Page 2 of 2
Analysis (Attach list if more space is needed.)

Sample ID / Description (Containers for each sample may be combined on one line.)	Date	Time	G=Grab C=Composite	Matrix: Aqueous	Matrix: Solid	Matrix: Non-Aqueous	No. of Containers by Preservative Type: Unpres.	H2SO4	HNO3	HCl	NaOH	5035 Kit	VOC (8260B)	SVOC (8270)	Metals (6010)	Lot No. ~~LC16~~ LC17068 7/17/10 Remarks / Cooler I.D.
F39SB011 (0.5-1.0)	3/16/10	0918	G		x		2					1	x	x	x	
F39SB011 (3.0-3.5)	3/16/10	0935	G		x		2					1	x	x	x	
F39SB012 (0.5-1.0)	3/16/10	1000	G		x		2					1	x	x	x	
F39SB012 (3.0-3.5)	3/16/10	1015	G		x		2					1	x	x	x	
Trip Blank (031610)	lab	lab		x						2			x			

Possible Hazard Identification: ☐ Non-Hazard ☐ Flammable ☐ Skin Irritant ☐ Poison ☑ Unknown
Sample Disposal: ☐ Return to Client ☑ Disposal by Lab
Note: All samples are retained for six weeks from receipt unless other arrangements are made.

Turn Around Time Required (Prior lab approval required for expedited TAT.): ☑ Standard ☐ Rush (Specify)
QC Requirements (Specify):

	Date	Time		Date	Time
1. Relinquished by: [signature] Robert B Shealy	3/16/10	1300	1. Received by: Fed Ex		
2. Relinquished by:			2. Received by:		
3. Relinquished by: FEDEX	3-17-10	0900	3. Laboratory received by: [signature]	3/17/10	0900

Comments:
LAB USE ONLY
Received on ice (Circle) Yes No Ice Pack
Receipt Temp. 1.0 °C

DISTRIBUTION: WHITE & YELLOW-Return to laboratory with Sample(s); PINK-Field/Client Copy

Document Number: F-AD-012 Effective Date: 09-04-02

Shealy Environmental Services, Inc.
Document Number: F-AD 016
Revision Number: 6

Page 1 of 1
Replaces Date: 09/22/06
Effective Date: 05/29/07

Sample Receipt Checklist (SRC)

Client: ARCADIS Cooler Inspected by/date: WWL / 3/17/10 Lot #: LC17068

Means of receipt: ☐ SESI ☐ Client ☐ UPS ☑ FedEx ☐ Airborne Exp ☐ Other

Yes ☑	No ☐	NA ☐	1. Were custody seals present on the cooler?
Yes ☑	No ☐	NA ☐	2. If custody seals were present, were they intact and unbroken?

Cooler ID/temperature upon receipt 4.0 °C / °C / °C / °C / °C / °C / °C / °C

Method: ☐ Temperature Blank ☑ Against Bottles
Method of coolant: ☑ Wet Ice ☐ Blue Ice ☐ Dry Ice ☐ None

If response is No (or Yes for 14, 15, 16), an explanation/resolution must be provided.

Yes ☐	No ☐	NA ☑	3. If temperature of any cooler exceeded 6.0°C, was Project Manager notified? PM notified by SRC, phone, note (circle one), other: _____. (For coolers received via commercial courier, PMs are to be notified immediately.
Yes ☑	No ☐	NA ☐	4. Is the commercial courier's packing slip attached to this form?
Yes ☐	No ☑	NA ☐	5. Were proper custody procedures (relinquished/received) followed?
Yes ☑	No ☐	NA ☐	6. Were sample IDs listed?
Yes ☑	No ☐	NA ☐	7. Was collection date & time listed?
Yes ☑	No ☐	NA ☐	8. Were tests to be performed listed on the COC or was quote # provided?
Yes ☑	No ☐	NA ☐	9. Did all samples arrive in the proper containers for each test?
Yes ☑	No ☐	NA ☐	10. Did all container label information (ID, date, time) agree with COC?
Yes ☑	No ☐	NA ☐	11. Did all containers arrive in good condition (unbroken, lids on, etc.)?
Yes ☑	No ☐	NA ☐	12. Was adequate sample volume available?
Yes ☑	No ☐	NA ☐	13. Were all samples received within ½ the holding time or 48 hours, whichever comes first?
Yes ☐	No ☑	NA ☐	14. Were any samples containers missing?
Yes ☐	No ☑	NA ☐	15. Were there any excess samples not listed on COC?
Yes ☐	No ☐	NA ☑	16. Were bubbles present >"pea-size" (¼"or 6mm in diameter) in any VOA vials?
Yes ☑	No ☐	NA ☐	17. Were all metals/O&G/HEM/nutrient samples received at a pH of <2?
Yes ☐	No ☐	NA ☑	18. Were all cyanide and/or sulfide samples received at a pH >12?
Yes ☐	No ☐	NA ☑	19. Were all applicable NH3/TKN/cyanide/phenol/BNA/pest/PCB/herb (<0.2mg/L) and toxicity (<0.1mg/L) samples free of residual chlorine?
Yes ☑	No ☐	NA ☐	20. Were collection temperatures documented on the COC for NC samples?

Sample Preservation (Must be completed for any sample(s) incorrectly preserved or with headspace.)

Sample(s) _____ were received incorrectly preserved and were adjusted accordingly in sample receiving with _____ (H_2SO_4,HNO_3,HCl,NaOH) with the SR # (number)

Sample(s) _____ were received with bubbles >6 mm in diameter.

Sample(s) _____ were received with TRC >0.2 mg/L for NH3/TKN/cyanide/BNA/pest/PCB/herb.

Toxicity sample(s) _____ analyzed by method 330.5.

Corrective Action taken, if necessary:
Was client notified: Yes ☐ No ☐
SESI employee: _____
Comments: _____

...ate 3/16/10 FedEx Tracking Number 871525021879
...nder's ...me ROBBY SHEALY Phone 864 216-5450
Company ARCADIS
Address 30 PATEWOOD DR STE 155 Dept/Plant/Suite/Room
...REENVILLE State SC ZIP 29615-6809
...our Internal Billing Reference P09HAFS.F39A.DG0FI

SHEALY ENVIRONMENTAL SERVICES, INC.

SHEALY **Chain of Custody Record**

SHEALY ENVIRONMENTAL SERVICES, INC.
106 Vantage Point Drive
West Columbia, South Carolina 29172
Telephone No. (803) 791-9700 Fax No. (803) 791-9111

Number 104849

Client: ARCADIS
Report to Contact: Shelley Gibbons
Telephone No. / Fax No. / E-mail: 919 854-1282 / 919 854-5448
Quote No.:
Address: 801 Corporate Center Dr Suite 300
Sampler's Signature: X
Waybill No.:
Page 1 of 1
City: Raleigh State: NC Zip Code: 27607
Printed Name: Robert B. Sleigh
Analysis (Attach list if more space is needed.)
Project Name: SWMU 39 Hunter Stewart
Project No.: GP09HAFS.F39A.DG0FI
P.O. No.:
Lot No.: LC17068

Sample ID / Description (Containers for each sample may be combined on one line.)	Date	Time	G=Grab C=Composite	Matrix: Aqueous	Matrix: Solid	Matrix: Non-Aqueous	No. of Containers by Preservative Type: Unpres.	H2SO4	HNO3	HCl	NaOH	2035 Kit	VOC 8260B	SVOC 8270	Metals 6010	Remarks / Cooler I.D.
Dup-2	3/18/10	0700	G		X		2					1	X	X	X	
F395B008 (4-5)	3/18/10	0820	G		X		2					1	X	X	X	
F395B002 (4-5)	3/18/10	0844	G		X		2					1	X	X	X	
Trip Blank (031810)	lab	lab		X						2			X			

Possible Hazard Identification: ☐ Non-Hazard ☐ Flammable ☐ Skin Irritant ☐ Poison ☒ Unknown

Sample Disposal: ☐ Return to Client ☒ Disposal by Lab

Note: All samples are retained for six weeks from receipt unless other arrangements are made.

Turn Around Time Required (Prior lab approval required for expedited TAT.): ☒ Standard ☐ Rush (Specify)

QC Requirements (Specify):

Relinquished by	Date	Time	Received by	Date	Time
1. Robert B. Sleigh	3/18/10	1300	1. Fed Ex		
2.			2.		
3. Fed Ex	3/19/10	830	3. Laboratory received by	3-19-10	0830

Comments: Last of the Soil Samples

LAB USE ONLY: Received on ice (Circle) Yes No Ice Pack

Receipt Temp. 3.9 °C

DISTRIBUTION: WHITE & YELLOW-Return to laboratory with Sample(s); PINK-Field/Client Copy

Document Number: F-AD-012 Effective Date: 08-04-02

SHEALY ENVIRONMENTAL SERVICES, INC.

Shealy Environmental Services, Inc.
Document Number: F-AD-016
Revision Number: 6

Page 1 of 1
Replaces Date: 09/22/06
Effective Date: 05/29/07

Sample Receipt Checklist (SRC)

Client: Arcadis Cooler Inspected by/date: WHL 3/19/10 Lot #: LC17618

Means of receipt: ☐ SESI ☐ Client ☐ UPS ☑ FedEx ☐ Airborne Exp ☐ Other

Yes ☑	No ☐	NA ☐	1. Were custody seals present on the cooler?
Yes ☐	No ☑	NA ☐	2. If custody seals were present, were they intact and unbroken?

Cooler ID/temperature upon receipt 3 - 9 °C / °C / °C / °C
/ °C / °C / °C / °C

Method: ☐ Temperature Blank ☑ Against Bottles
Method of coolant: ☑ Wet Ice ☐ Blue Ice ☐ Dry Ice ☐ None

If response is No (or Yes for 14, 15, 16), an explanation/resolution must be provided.

Yes ☐	No ☐	NA ☑	3. If temperature of any cooler exceeded 6.0°C, was Project Manager notified? PM notified by SRC, phone, note (circle one), other:_____. (For coolers received via commercial courier, PMs are to be notified immediately.
Yes ☑	No ☐	NA ☐	4. Is the commercial courier's packing slip attached to this form?
Yes ☑	No ☐	NA ☐	5. Were proper custody procedures (relinquished/received) followed?
Yes ☑	No ☐	NA ☐	6. Were sample IDs listed?
Yes ☑	No ☐	NA ☐	7. Was collection date & time listed?
Yes ☑	No ☐	NA ☐	8. Were tests to be performed listed on the COC or was quote # provided?
Yes ☑	No ☐	NA ☐	9. Did all samples arrive in the proper containers for each test?
Yes ☑	No ☐	NA ☐	10. Did all container label information (ID, date, time) agree with COC?
Yes ☑	No ☐	NA ☐	11. Did all containers arrive in good condition (unbroken, lids on, etc.)?
Yes ☑	No ☐	NA ☐	12. Was adequate sample volume available?
Yes ☑	No ☐	NA ☐	13. Were all samples received within ½ the holding time or 48 hours, whichever comes first?
Yes ☐	No ☑	NA ☐	14. Were any samples containers missing?
Yes ☐	No ☑	NA ☐	15. Were there any excess samples not listed on COC?
Yes ☐	No ☑	NA ☐	16. Were bubbles present >"pea-size" (¼" or 6mm in diameter) in any VOA vials?
Yes ☐	No ☐	NA ☑	17. Were all metals/O&G/HEM/nutrient samples received at a pH of <2?
Yes ☐	No ☐	NA ☑	18. Were all cyanide and/or sulfide samples received at a pH >12?
Yes ☐	No ☐	NA ☑	19. Were all applicable NH3/TKN/cyanide/phenol/BNA/pest/PCB/herb (<0.2mg/L) and toxicity (<0.1mg/L) samples free of residual chlorine?
Yes ☐	No ☐	NA ☑	20. Were collection temperatures documented on the COC for NC samples?

Sample Preservation (Must be completed for any sample(s) incorrectly preserved or with headspace.)

Sample(s)_____ were received incorrectly preserved and were adjusted accordingly in sample receiving with _____ (H_2SO_4,HNO_3,HCl,NaOH) with the SR # (number)

Sample(s)_____ were received with bubbles >6 mm in diameter.

Sample(s)_____ were received with TRC >0.2 mg/L for NH3/TKN/cyanide/BNA/pest/PCB/herb.

Toxicity sample(s)_____ were received with TRC >0.1 mg/L and were analyzed by method 330.5.

Corrective Action taken, if necessary:

Was client notified: Yes ☐ No ☐ Did client respond: Yes ☐ No ☐

SESI employee:_____ Date of response:_____

Comments:

Report of Analysis

ARCADIS U.S., Inc.
30 Patewood Drive
Suite 155
Greenville, SC 29615
Attention: Allison Fang

Project Name: Fort Stewart FST-39

Project Number: GP09HAFS.F39A.DGOFI

Lot Number: MA26019

Date Completed: 02/08/2011

Nisreen Saikaly
Project Manager

This report shall not be reproduced, except in its entirety, without the written approval of Shealy Environmental Services, Inc.

The following non-paginated documents are considered part of this report: Chain of Custody Record and Sample Receipt Checklist.

MA26019

Case Narrative
ARCADIS U.S., Inc.
Lot Number: MA26019

This Report of Analysis contains the analytical result(s) for the sample(s) listed on the Sample Summary following this Case Narrative. The sample receiving date is documented in the header information associated with each sample.

Sample receipt, sample analysis, and data review have been performed in accordance with the most current approved NELAC standards, the Shealy Environmental Services, Inc. ("Shealy") Quality Assurance Management Plan (QAMP), standard operating procedures (SOPs), and Shealy policies. Any exceptions to the NELAC standards, the QAMP, SOPs or policies are qualified on the results page or discussed below.

If you have any questions regarding this report please contact the Shealy Project Manager listed on the cover page.

Nitrite

The MS/MSD recoveries in batches 51443 and 51813 were outside acceptance criteria. All other QA/QC criteria for the batch were within acceptance criteria and method control limits. The MS/MSD recovery results are attributed to matrix interference. The associated sample results were reported and no corrective action was required.

Nitrate

The MS/MSD recoveries in batches 51519 and 51679 were outside acceptance criteria. All other QA/QC criteria for the batch were within acceptance criteria and method control limits. The MS/MSD recovery results are attributed to matrix interference. The associated sample results were reported and no corrective action was required.

Semivolatile Organic Compounds

The MS/MSD recoveries in batches 51601, 51712 and 51711 were outside acceptance criteria. All other QA/QC criteria for the batch were within acceptance criteria and method control limits. The MS/MSD recovery results are attributed to matrix interference. The associated sample results were reported and no corrective action was required.
The LCS recovery for Benzo(a)pyrene was slightly outside method control limits in batch 51711. As per method, it is statistically likely that a few analytes will be outside control limits; up to five analytes may marginally exceed the control limits. Therefore the associated sample results were reported and no corrective action was required.

Sample Summary
ARCADIS U.S., Inc.
Lot Number: MA26019

Sample Number	Sample ID	Matrix	Date Sampled	Date Received
001	G4MW31 (012511)	Aqueous	01/25/2011 1020	01/26/2011
002	G4MW32 (012511)	Aqueous	01/25/2011 1340	01/26/2011
003	G4MW14 (012511)	Aqueous	01/25/2011 1430	01/26/2011
004	DUP02 (012511)	Aqueous	01/25/2011	01/26/2011
005	G4MW022	Aqueous	01/25/2011 1115	01/26/2011
006	G4MW026	Aqueous	01/25/2011 1305	01/26/2011
007	G4MW028	Aqueous	01/25/2011 1410	01/26/2011
008	TRIP BLANK	Aqueous	01/25/2011 1020	01/26/2011
009	G4MW016	Aqueous	01/26/2011 1030	01/27/2011
010	G4DUP-01	Aqueous	01/26/2011	01/27/2011
011	G4MW042	Aqueous	01/26/2011 1240	01/27/2011
012	G4MW047	Aqueous	01/26/2011 1435	01/27/2011
013	G4MW038	Aqueous	01/26/2011 1431	01/27/2011
014	Trip Blank	Aqueous	01/27/2011 0835	01/27/2011
015	G4MW023	Aqueous	01/27/2011 0915	01/29/2011
016	G4MW044	Aqueous	01/26/2011 1630	01/29/2011
017	G4MW045	Aqueous	01/26/2011 1715	01/29/2011
018	G4MW034	Aqueous	01/26/2011 1815	01/29/2011
019	G4MW035	Aqueous	01/26/2011 1905	01/29/2011
020	G4MW017	Aqueous	01/26/2011 2005	01/29/2011
021	G4MW043	Aqueous	01/27/2011 1040	01/29/2011
022	G4MW037	Aqueous	01/27/2011 1210	01/29/2011
023	G4MW027	Aqueous	01/27/2011 1310	01/29/2011
024	G4MW046	Aqueous	01/27/2011 1610	01/29/2011
025	TRIP BLANK	Aqueous	01/27/2011	01/29/2011
026	G4MW040	Aqueous	01/28/2011 0845	01/29/2011
027	G4MW18 (012611)	Aqueous	01/26/2011 1625	01/29/2011
028	G4MW30 (012611)	Aqueous	01/26/2011 1815	01/29/2011
029	G4MW39 (012611)	Aqueous	01/26/2011 2030	01/29/2011
030	G4MW20 (012711)	Aqueous	01/27/2011 0750	01/29/2011
031	G4MW33 (012711)	Aqueous	01/27/2011 0830	01/29/2011
032	G4MW11 (012711)	Aqueous	01/27/2011 0945	01/29/2011
033	G4MW25 (012711)	Aqueous	01/27/2011 1000	01/29/2011
034	G4MW10 (012711)	Aqueous	01/27/2011 1053	01/29/2011
035	G4MW24 (012711)	Aqueous	01/27/2011 1110	01/29/2011
036	G4MW13 (012711)	Aqueous	01/27/2011 1245	01/29/2011
037	G4MW29 (012711)	Aqueous	01/27/2011 1535	01/29/2011
038	G4MW36 (012711)	Aqueous	01/27/2011 1830	01/29/2011
039	G4MW41 (012711)	Aqueous	01/27/2011 1945	01/29/2011
040	G4MW19 (012711)	Aqueous	01/27/2011 1355	01/29/2011
041	TRIP BLANK	Aqueous	01/27/2011	01/29/2011

(41 samples)

Executive Summary
ARCADIS U.S., Inc.
Lot Number: MA26019

Sample	Sample ID	Matrix	Parameter	Method	Result	Q	Units	Page
001	G4MW31 (012511)	Aqueous	Dissolved Barium	6010C	0.0084	J	mg/L	16
001	G4MW31 (012511)	Aqueous	Dissolved Silver	6010C	0.0011	J	mg/L	16
001	G4MW31 (012511)	Aqueous	Barium	6010C	0.0084	J	mg/L	17
001	G4MW31 (012511)	Aqueous	Lead	6010C	0.0035	J	mg/L	17
001	G4MW31 (012511)	Aqueous	Silver	6010C	0.00095	J	mg/L	17
002	G4MW32 (012511)	Aqueous	cis-1,2-Dichloroethene	8260B	1.9		ug/L	18
002	G4MW32 (012511)	Aqueous	Tetrachloroethene	8260B	12		ug/L	18
002	G4MW32 (012511)	Aqueous	Trichloroethene	8260B	14		ug/L	18
002	G4MW32 (012511)	Aqueous	Dissolved Barium	6010C	0.12		mg/L	22
002	G4MW32 (012511)	Aqueous	Dissolved Cadmium	6010C	0.00066	J	mg/L	22
002	G4MW32 (012511)	Aqueous	Dissolved Lead	6010C	0.0021	J	mg/L	22
002	G4MW32 (012511)	Aqueous	Dissolved Silver	6010C	0.0017	J	mg/L	22
002	G4MW32 (012511)	Aqueous	Barium	6010C	0.13		mg/L	23
002	G4MW32 (012511)	Aqueous	Mercury	7470A	0.000057	J	mg/L	23
002	G4MW32 (012511)	Aqueous	Silver	6010C	0.0057		mg/L	23
003	G4MW14 (012511)	Aqueous	Dissolved Barium	6010C	0.016	J	mg/L	28
003	G4MW14 (012511)	Aqueous	Dissolved Silver	6010C	0.0014	J	mg/L	28
003	G4MW14 (012511)	Aqueous	Barium	6010C	0.016	J	mg/L	29
003	G4MW14 (012511)	Aqueous	Mercury	7470A	0.000054	J	mg/L	29
004	DUP02 (012511)	Aqueous	Benzene	8260B	0.19	J	ug/L	30
004	DUP02 (012511)	Aqueous	cis-1,2-Dichloroethene	8260B	1.8		ug/L	30
004	DUP02 (012511)	Aqueous	Tetrachloroethene	8260B	14		ug/L	30
004	DUP02 (012511)	Aqueous	Trichloroethene	8260B	14		ug/L	30
004	DUP02 (012511)	Aqueous	Dissolved Barium	6010C	0.11		mg/L	34
004	DUP02 (012511)	Aqueous	Dissolved Cadmium	6010C	0.00064	J	mg/L	34
004	DUP02 (012511)	Aqueous	Dissolved Silver	6010C	0.0018	J	mg/L	34
004	DUP02 (012511)	Aqueous	Barium	6010C	0.13		mg/L	35
004	DUP02 (012511)	Aqueous	Silver	6010C	0.0056		mg/L	35
005	G4MW022	Aqueous	trans-1,2-Dichloroethene	8260B	0.54	J	ug/L	36
005	G4MW022	Aqueous	cis-1,2-Dichloroethene	8260B	1.9		ug/L	36
005	G4MW022	Aqueous	Trichloroethene	8260B	3.1		ug/L	36
005	G4MW022	Aqueous	Dissolved Barium	6010C	0.27		mg/L	40
005	G4MW022	Aqueous	Dissolved Chromium	6010C	0.0023	J	mg/L	40
005	G4MW022	Aqueous	Dissolved Silver	6010C	0.0013	J	mg/L	40
005	G4MW022	Aqueous	Barium	6010C	0.30		mg/L	41
005	G4MW022	Aqueous	Chromium	6010C	0.0029	J	mg/L	41
005	G4MW022	Aqueous	Mercury	7470A	0.000062	J	mg/L	41
005	G4MW022	Aqueous	Silver	6010C	0.0035	J	mg/L	41
006	G4MW026	Aqueous	Dissolved Barium	6010C	0.023	J	mg/L	46
006	G4MW026	Aqueous	Dissolved Silver	6010C	0.00057	J	mg/L	46
006	G4MW026	Aqueous	Barium	6010C	0.027		mg/L	47
007	G4MW028	Aqueous	Dissolved Barium	6010C	0.088		mg/L	52
007	G4MW028	Aqueous	Dissolved Chromium	6010C	0.035		mg/L	52
007	G4MW028	Aqueous	Dissolved Lead	6010C	0.011		mg/L	52
007	G4MW028	Aqueous	Dissolved Mercury	7470A	0.00014		mg/L	52

Sample	Sample ID	Matrix	Parameter	Method	Result	Q	Units	Page
007	G4MW028	Aqueous	Dissolved Selenium	6010C	0.0027	J	mg/L	52
007	G4MW028	Aqueous	Dissolved Silver	6010C	0.00040	J	mg/L	52
007	G4MW028	Aqueous	Arsenic	6010C	0.0075	J	mg/L	53
007	G4MW028	Aqueous	Barium	6010C	0.10		mg/L	53
007	G4MW028	Aqueous	Chromium	6010C	0.14		mg/L	53
007	G4MW028	Aqueous	Lead	6010C	0.060		mg/L	53
007	G4MW028	Aqueous	Mercury	7470A	0.0011		mg/L	53
007	G4MW028	Aqueous	Selenium	6010C	0.0099	J	mg/L	53
007	G4MW028	Aqueous	Silver	6010C	0.0024	J	mg/L	53
008	TRIP BLANK	Aqueous	Methylene chloride	8260B	0.35	J	ug/L	54
009	G4MW016	Aqueous	Chloride	300.0	4.4		mg/L	56
009	G4MW016	Aqueous	Nitrite - N	353.2 REV 2	0.016	J	mg/L	56
009	G4MW016	Aqueous	Sulfate	300.0	210		mg/L	56
009	G4MW016	Aqueous	TOC	5310D	3.3		mg/L	56
009	G4MW016	Aqueous	Benzene	8260B	0.15	J	ug/L	57
009	G4MW016	Aqueous	trans-1,2-Dichloroethene	8260B	3.9		ug/L	57
009	G4MW016	Aqueous	cis-1,2-Dichloroethene	8260B	13		ug/L	57
009	G4MW016	Aqueous	1,1-Dichloroethene	8260B	0.50	J	ug/L	57
009	G4MW016	Aqueous	Tetrachloroethene	8260B	1.9		ug/L	57
009	G4MW016	Aqueous	Trichloroethene	8260B	15		ug/L	57
009	G4MW016	Aqueous	Dissolved Barium	6010C	0.034		mg/L	61
009	G4MW016	Aqueous	Dissolved Silver	6010C	0.0016	J	mg/L	61
009	G4MW016	Aqueous	Arsenic	6010C	0.0048	J	mg/L	62
009	G4MW016	Aqueous	Barium	6010C	0.034		mg/L	62
009	G4MW016	Aqueous	Silver	6010C	0.00095	J	mg/L	62
010	G4DUP-01	Aqueous	Chloride	300.0	4.0		mg/L	63
010	G4DUP-01	Aqueous	Nitrate - N	353.2	0.038		mg/L	63
010	G4DUP-01	Aqueous	Nitrite - N	353.2 REV 2	0.019	J	mg/L	63
010	G4DUP-01	Aqueous	Sulfate	300.0	230		mg/L	63
010	G4DUP-01	Aqueous	TOC	5310D	3.5		mg/L	63
010	G4DUP-01	Aqueous	Benzene	8260B	0.16	J	ug/L	64
010	G4DUP-01	Aqueous	trans-1,2-Dichloroethene	8260B	4.0		ug/L	64
010	G4DUP-01	Aqueous	cis-1,2-Dichloroethene	8260B	13		ug/L	64
010	G4DUP-01	Aqueous	1,1-Dichloroethene	8260B	0.52	J	ug/L	64
010	G4DUP-01	Aqueous	Tetrachloroethene	8260B	1.8		ug/L	64
010	G4DUP-01	Aqueous	Trichloroethene	8260B	15		ug/L	64
010	G4DUP-01	Aqueous	Dissolved Barium	6010C	0.033		mg/L	68
010	G4DUP-01	Aqueous	Dissolved Mercury	7470A	0.000056	J	mg/L	68
010	G4DUP-01	Aqueous	Barium	6010C	0.034		mg/L	69
010	G4DUP-01	Aqueous	Selenium	6010C	0.0030	J	mg/L	69
011	G4MW042	Aqueous	Alkalinity	SM 2320B	280		mg/L	70
011	G4MW042	Aqueous	Chloride	300.0	5.2		mg/L	70
011	G4MW042	Aqueous	Nitrate - N	353.2	0.80		mg/L	70
011	G4MW042	Aqueous	Nitrite - N	353.2 REV 2	0.035		mg/L	70
011	G4MW042	Aqueous	Sulfate	300.0	5.0		mg/L	70
011	G4MW042	Aqueous	TOC	5310D	9.3		mg/L	70
011	G4MW042	Aqueous	Acetone	8260B	29		ug/L	71
011	G4MW042	Aqueous	3 & 4-Methylphenol	8270D	1.4	J	ug/L	73

Sample	Sample ID	Matrix	Parameter	Method	Result	Q	Units	Page
011	G4MW042	Aqueous	Dissolved Barium	6010C	0.058		mg/L	75
011	G4MW042	Aqueous	Dissolved Silver	6010C	0.0011	J	mg/L	75
011	G4MW042	Aqueous	Barium	6010C	0.071		mg/L	76
012	G4MW047	Aqueous	Alkalinity	SM 2320B	37		mg/L	77
012	G4MW047	Aqueous	Chloride	300.0	14		mg/L	77
012	G4MW047	Aqueous	Nitrite - N	353.2 REV 2	0.032		mg/L	77
012	G4MW047	Aqueous	Sulfate	300.0	130		mg/L	77
012	G4MW047	Aqueous	TOC	5310D	40		mg/L	77
012	G4MW047	Aqueous	Benzene	8260B	0.23	J	ug/L	78
012	G4MW047	Aqueous	Chloroform	8260B	1.1		ug/L	78
012	G4MW047	Aqueous	cis-1,2-Dichloroethene	8260B	0.28	J	ug/L	78
012	G4MW047	Aqueous	Ethylbenzene	8260B	0.43	J	ug/L	78
012	G4MW047	Aqueous	Tetrachloroethene	8260B	5.9		ug/L	78
012	G4MW047	Aqueous	Toluene	8260B	1.9		ug/L	78
012	G4MW047	Aqueous	Trichloroethene	8260B	3.2		ug/L	78
012	G4MW047	Aqueous	Xylenes (total)	8260B	1.6		ug/L	78
012	G4MW047	Aqueous	Dissolved Barium	6010C	0.064		mg/L	82
012	G4MW047	Aqueous	Dissolved Chromium	6010C	0.0023	J	mg/L	82
012	G4MW047	Aqueous	Dissolved Silver	6010C	0.00095	J	mg/L	82
012	G4MW047	Aqueous	Barium	6010C	0.057		mg/L	83
012	G4MW047	Aqueous	Chromium	6010C	0.024		mg/L	83
012	G4MW047	Aqueous	Lead	6010C	0.014		mg/L	83
012	G4MW047	Aqueous	Mercury	7470A	0.00019		mg/L	83
012	G4MW047	Aqueous	Selenium	6010C	0.0056	J	mg/L	83
012	G4MW047	Aqueous	Silver	6010C	0.0012	J	mg/L	83
013	G4MW038	Aqueous	Alkalinity	SM 2320B	12		mg/L	84
013	G4MW038	Aqueous	Chloride	300.0	3.5		mg/L	84
013	G4MW038	Aqueous	Nitrite - N	353.2 REV 2	0.067		mg/L	84
013	G4MW038	Aqueous	Sulfate	300.0	5.1		mg/L	84
013	G4MW038	Aqueous	TOC	5310D	6.3		mg/L	84
013	G4MW038	Aqueous	Dissolved Barium	6010C	0.035		mg/L	89
013	G4MW038	Aqueous	Dissolved Silver	6010C	0.00063	J	mg/L	89
013	G4MW038	Aqueous	Barium	6010C	0.049		mg/L	90
013	G4MW038	Aqueous	Cadmium	6010C	0.00073	J	mg/L	90
013	G4MW038	Aqueous	Chromium	6010C	0.024		mg/L	90
013	G4MW038	Aqueous	Mercury	7470A	0.000075	J	mg/L	90
013	G4MW038	Aqueous	Selenium	6010C	0.0033	J	mg/L	90
014	Trip Blank	Aqueous	Methylene chloride	8260B	0.70	J	ug/L	91
015	G4MW023	Aqueous	trans-1,2-Dichloroethene	8260B	0.31	J	ug/L	93
015	G4MW023	Aqueous	cis-1,2-Dichloroethene	8260B	0.93	J	ug/L	93
015	G4MW023	Aqueous	Trichloroethene	8260B	1.4		ug/L	93
015	G4MW023	Aqueous	Dissolved Arsenic	6010C	0.0041	J	mg/L	97
015	G4MW023	Aqueous	Dissolved Barium	6010C	0.018	J	mg/L	97
015	G4MW023	Aqueous	Dissolved Silver	6010C	0.0012	J	mg/L	97
015	G4MW023	Aqueous	Arsenic	6010C	0.0074	J	mg/L	98
015	G4MW023	Aqueous	Barium	6010C	0.022	J	mg/L	98
015	G4MW023	Aqueous	Chromium	6010C	0.0053		mg/L	98
015	G4MW023	Aqueous	Mercury	7470A	0.000072	J	mg/L	98

Sample	Sample ID	Matrix	Parameter	Method	Result	Q	Units	Page
016	G4MW044	Aqueous	cis-1,2-Dichloroethene	8260B	0.93	J	ug/L	99
016	G4MW044	Aqueous	Trichloroethene	8260B	4.9		ug/L	99
016	G4MW044	Aqueous	Dissolved Barium	6010C	0.090		mg/L	103
016	G4MW044	Aqueous	Dissolved Lead	6010C	0.0025	J	mg/L	103
016	G4MW044	Aqueous	Dissolved Mercury	7470A	0.000060	J	mg/L	103
016	G4MW044	Aqueous	Barium	6010C	0.083		mg/L	104
016	G4MW044	Aqueous	Chromium	6010C	0.0041	J	mg/L	104
017	G4MW045	Aqueous	Dissolved Arsenic	6010C	0.0070	J	mg/L	109
017	G4MW045	Aqueous	Dissolved Barium	6010C	0.060		mg/L	109
017	G4MW045	Aqueous	Arsenic	6010C	0.0061	J	mg/L	110
017	G4MW045	Aqueous	Barium	6010C	0.062		mg/L	110
018	G4MW034	Aqueous	Dissolved Barium	6010C	0.060		mg/L	115
018	G4MW034	Aqueous	Dissolved Chromium	6010C	0.0022	J	mg/L	115
018	G4MW034	Aqueous	Barium	6010C	0.068		mg/L	116
018	G4MW034	Aqueous	Chromium	6010C	0.0044	J	mg/L	116
019	G4MW035	Aqueous	Benzene	8260B	16		ug/L	117
019	G4MW035	Aqueous	1,1-Dichloroethane	8260B	0.28	J	ug/L	117
019	G4MW035	Aqueous	trans-1,2-Dichloroethene	8260B	2.0		ug/L	117
019	G4MW035	Aqueous	cis-1,2-Dichloroethene	8260B	7.5		ug/L	117
019	G4MW035	Aqueous	1,1-Dichloroethene	8260B	0.64	J	ug/L	117
019	G4MW035	Aqueous	Trichloroethene	8260B	3.7		ug/L	117
019	G4MW035	Aqueous	Dissolved Barium	6010C	0.039		mg/L	121
019	G4MW035	Aqueous	Barium	6010C	0.042		mg/L	122
019	G4MW035	Aqueous	Chromium	6010C	0.0035	J	mg/L	122
020	G4MW017	Aqueous	Benzene	8260B	0.17	J	ug/L	123
020	G4MW017	Aqueous	trans-1,2-Dichloroethene	8260B	2.1		ug/L	123
020	G4MW017	Aqueous	cis-1,2-Dichloroethene	8260B	7.1		ug/L	123
020	G4MW017	Aqueous	1,1-Dichloroethene	8260B	0.28	J	ug/L	123
020	G4MW017	Aqueous	Trichloroethene	8260B	15		ug/L	123
020	G4MW017	Aqueous	Dissolved Barium	6010C	0.086		mg/L	127
020	G4MW017	Aqueous	Dissolved Chromium	6010C	0.0024	J	mg/L	127
020	G4MW017	Aqueous	Barium	6010C	0.081		mg/L	128
020	G4MW017	Aqueous	Chromium	6010C	0.0021	J	mg/L	128
021	G4MW043	Aqueous	Carbon disulfide	8260B	0.38	J	ug/L	129
021	G4MW043	Aqueous	trans-1,2-Dichloroethene	8260B	0.47	J	ug/L	129
021	G4MW043	Aqueous	cis-1,2-Dichloroethene	8260B	1.7		ug/L	129
021	G4MW043	Aqueous	1,1-Dichloroethene	8260B	0.16	J	ug/L	129
021	G4MW043	Aqueous	Trichloroethene	8260B	1.4		ug/L	129
021	G4MW043	Aqueous	Dissolved Barium	6010C	0.092		mg/L	133
021	G4MW043	Aqueous	Barium	6010C	0.087		mg/L	134
022	G4MW037	Aqueous	Benzene	8260B	2.1		ug/L	135
022	G4MW037	Aqueous	Dissolved Arsenic	6010C	0.0090	J	mg/L	139
022	G4MW037	Aqueous	Dissolved Barium	6010C	0.028		mg/L	139
022	G4MW037	Aqueous	Arsenic	6010C	0.0057	J	mg/L	140
022	G4MW037	Aqueous	Barium	6010C	0.030		mg/L	140
022	G4MW037	Aqueous	Chromium	6010C	0.0042	J	mg/L	140
023	G4MW027	Aqueous	cis-1,2-Dichloroethene	8260B	0.33	J	ug/L	141
023	G4MW027	Aqueous	Trichloroethene	8260B	6.4		ug/L	141

Sample	Sample ID	Matrix	Parameter	Method	Result	Q	Units	Page
023	G4MW027	Aqueous	Dissolved Barium	6010C	0.095		mg/L	145
023	G4MW027	Aqueous	Dissolved Lead	6010C	0.0025	J	mg/L	145
023	G4MW027	Aqueous	Barium	6010C	0.092		mg/L	146
023	G4MW027	Aqueous	Chromium	6010C	0.0034	J	mg/L	146
023	G4MW027	Aqueous	Lead	6010C	0.0088	J	mg/L	146
024	G4MW046	Aqueous	Carbon disulfide	8260B	0.38	J	ug/L	147
024	G4MW046	Aqueous	Chloroform	8260B	0.55	J	ug/L	147
024	G4MW046	Aqueous	cis-1,2-Dichloroethene	8260B	0.33	J	ug/L	147
024	G4MW046	Aqueous	Trichloroethene	8260B	2.5		ug/L	147
024	G4MW046	Aqueous	Dissolved Barium	6010C	0.051		mg/L	151
024	G4MW046	Aqueous	Dissolved Chromium	6010C	0.0022	J	mg/L	151
024	G4MW046	Aqueous	Dissolved Lead	6010C	0.0032	J	mg/L	151
024	G4MW046	Aqueous	Barium	6010C	0.053		mg/L	152
024	G4MW046	Aqueous	Cadmium	6010C	0.00062	J	mg/L	152
025	TRIP BLANK	Aqueous	Methylene chloride	8260B	0.52	J	ug/L	153
026	G4MW040	Aqueous	Chloride	300.0	5.2		mg/L	155
026	G4MW040	Aqueous	Nitrate - N	353.2	0.34		mg/L	155
026	G4MW040	Aqueous	Sulfate	300.0	140		mg/L	155
026	G4MW040	Aqueous	TOC	5310D	5.9		mg/L	155
026	G4MW040	Aqueous	Carbon disulfide	8260B	0.27	J	ug/L	156
026	G4MW040	Aqueous	trans-1,2-Dichloroethene	8260B	4.7		ug/L	156
026	G4MW040	Aqueous	cis-1,2-Dichloroethene	8260B	24		ug/L	156
026	G4MW040	Aqueous	1,1-Dichloroethene	8260B	0.20	J	ug/L	156
026	G4MW040	Aqueous	Trichloroethene	8260B	52		ug/L	156
026	G4MW040	Aqueous	Dissolved Arsenic	6010C	0.0059	J	mg/L	160
026	G4MW040	Aqueous	Dissolved Barium	6010C	0.065		mg/L	160
026	G4MW040	Aqueous	Dissolved Lead	6010C	0.014		mg/L	160
026	G4MW040	Aqueous	Arsenic	6010C	0.0057	J	mg/L	161
026	G4MW040	Aqueous	Barium	6010C	0.089		mg/L	161
026	G4MW040	Aqueous	Chromium	6010C	0.022		mg/L	161
026	G4MW040	Aqueous	Lead	6010C	0.025		mg/L	161
026	G4MW040	Aqueous	Selenium	6010C	0.0027	J	mg/L	161
027	G4MW18 (012611)	Aqueous	1,1-Dichloroethane	8260B	0.13	J	ug/L	162
027	G4MW18 (012611)	Aqueous	trans-1,2-Dichloroethene	8260B	3.4		ug/L	162
027	G4MW18 (012611)	Aqueous	cis-1,2-Dichloroethene	8260B	13		ug/L	162
027	G4MW18 (012611)	Aqueous	1,1-Dichloroethene	8260B	0.43	J	ug/L	162
027	G4MW18 (012611)	Aqueous	Trichloroethene	8260B	6.7		ug/L	162
027	G4MW18 (012611)	Aqueous	Dissolved Barium	6010C	0.039		mg/L	166
027	G4MW18 (012611)	Aqueous	Barium	6010C	0.040		mg/L	167
027	G4MW18 (012611)	Aqueous	Lead	6010C	0.0024	J	mg/L	167
028	G4MW30 (012611)	Aqueous	cis-1,2-Dichloroethene	8260B	0.32	J	ug/L	168
028	G4MW30 (012611)	Aqueous	Dissolved Barium	6010C	0.074		mg/L	172
028	G4MW30 (012611)	Aqueous	Arsenic	6010C	0.0067	J	mg/L	173
028	G4MW30 (012611)	Aqueous	Barium	6010C	0.099		mg/L	173
028	G4MW30 (012611)	Aqueous	Chromium	6010C	0.0032	J	mg/L	173
028	G4MW30 (012611)	Aqueous	Lead	6010C	0.0052	J	mg/L	173
029	G4MW39 (012611)	Aqueous	Carbon disulfide	8260B	0.33	J	ug/L	174
029	G4MW39 (012611)	Aqueous	Dissolved Arsenic	6010C	0.0080	J	mg/L	178

Sample	Sample ID	Matrix	Parameter	Method	Result	Q	Units	Page
029	G4MW39 (012611)	Aqueous	Dissolved Barium	6010C	0.058		mg/L	178
029	G4MW39 (012611)	Aqueous	Arsenic	6010C	0.021		mg/L	179
029	G4MW39 (012611)	Aqueous	Barium	6010C	0.20		mg/L	179
029	G4MW39 (012611)	Aqueous	Chromium	6010C	0.15		mg/L	179
029	G4MW39 (012611)	Aqueous	Lead	6010C	0.12		mg/L	179
029	G4MW39 (012611)	Aqueous	Mercury	7470A	0.000084	J	mg/L	179
029	G4MW39 (012611)	Aqueous	Selenium	6010C	0.0032	J	mg/L	179
030	G4MW20 (012711)	Aqueous	Benzene	8260B	0.20	J	ug/L	180
030	G4MW20 (012711)	Aqueous	trans-1,2-Dichloroethene	8260B	0.51	J	ug/L	180
030	G4MW20 (012711)	Aqueous	cis-1,2-Dichloroethene	8260B	2.8		ug/L	180
030	G4MW20 (012711)	Aqueous	Trichloroethene	8260B	0.22	J	ug/L	180
030	G4MW20 (012711)	Aqueous	Dissolved Arsenic	6010C	0.0099	J	mg/L	184
030	G4MW20 (012711)	Aqueous	Dissolved Barium	6010C	0.041		mg/L	184
030	G4MW20 (012711)	Aqueous	Barium	6010C	0.043		mg/L	185
030	G4MW20 (012711)	Aqueous	Chromium	6010C	0.0040	J	mg/L	185
031	G4MW33 (012711)	Aqueous	Benzene	8260B	0.22	J	ug/L	186
031	G4MW33 (012711)	Aqueous	trans-1,2-Dichloroethene	8260B	0.66	J	ug/L	186
031	G4MW33 (012711)	Aqueous	cis-1,2-Dichloroethene	8260B	4.9		ug/L	186
031	G4MW33 (012711)	Aqueous	1,1-Dichloroethene	8260B	0.34	J	ug/L	186
031	G4MW33 (012711)	Aqueous	Tetrachloroethene	8260B	2.4		ug/L	186
031	G4MW33 (012711)	Aqueous	Trichloroethene	8260B	33		ug/L	186
031	G4MW33 (012711)	Aqueous	Dissolved Barium	6010C	0.042		mg/L	190
031	G4MW33 (012711)	Aqueous	Arsenic	6010C	0.0052	J	mg/L	191
031	G4MW33 (012711)	Aqueous	Barium	6010C	0.042		mg/L	191
031	G4MW33 (012711)	Aqueous	Chromium	6010C	0.0036	J	mg/L	191
032	G4MW11 (012711)	Aqueous	1,1-Dichloroethane	8260B	0.17	J	ug/L	192
032	G4MW11 (012711)	Aqueous	trans-1,2-Dichloroethene	8260B	4.3		ug/L	192
032	G4MW11 (012711)	Aqueous	cis-1,2-Dichloroethene	8260B	14		ug/L	192
032	G4MW11 (012711)	Aqueous	1,1-Dichloroethene	8260B	0.49	J	ug/L	192
032	G4MW11 (012711)	Aqueous	Trichloroethene	8260B	6.2		ug/L	192
032	G4MW11 (012711)	Aqueous	Dissolved Barium	6010C	0.036		mg/L	196
032	G4MW11 (012711)	Aqueous	Arsenic	6010C	0.0052	J	mg/L	197
032	G4MW11 (012711)	Aqueous	Barium	6010C	0.037		mg/L	197
032	G4MW11 (012711)	Aqueous	Silver	6010C	0.00063	J	mg/L	197
033	G4MW25 (012711)	Aqueous	trans-1,2-Dichloroethene	8260B	2.4		ug/L	198
033	G4MW25 (012711)	Aqueous	cis-1,2-Dichloroethene	8260B	8.3		ug/L	198
033	G4MW25 (012711)	Aqueous	Trichloroethene	8260B	5.8		ug/L	198
033	G4MW25 (012711)	Aqueous	Dissolved Arsenic	6010C	0.0040	J	mg/L	202
033	G4MW25 (012711)	Aqueous	Dissolved Barium	6010C	0.058		mg/L	202
033	G4MW25 (012711)	Aqueous	Barium	6010C	0.061		mg/L	203
033	G4MW25 (012711)	Aqueous	Chromium	6010C	0.0046	J	mg/L	203
034	G4MW10 (012711)	Aqueous	Benzene	8260B	0.17	J	ug/L	204
034	G4MW10 (012711)	Aqueous	trans-1,2-Dichloroethene	8260B	1.1		ug/L	204
034	G4MW10 (012711)	Aqueous	cis-1,2-Dichloroethene	8260B	1.8		ug/L	204
034	G4MW10 (012711)	Aqueous	Trichloroethene	8260B	0.32	J	ug/L	204
034	G4MW10 (012711)	Aqueous	Vinyl chloride	8260B	2.5		ug/L	204
034	G4MW10 (012711)	Aqueous	Dissolved Barium	6010C	0.019	J	mg/L	208
034	G4MW10 (012711)	Aqueous	Arsenic	6010C	0.0052	J	mg/L	209

Sample	Sample ID	Matrix	Parameter	Method	Result	Q	Units	Page
034	G4MW10 (012711)	Aqueous	Barium	6010C	0.018	J	mg/L	209
034	G4MW10 (012711)	Aqueous	Chromium	6010C	0.0025	J	mg/L	209
035	G4MW24 (012711)	Aqueous	trans-1,2-Dichloroethene	8260B	3.3		ug/L	210
035	G4MW24 (012711)	Aqueous	cis-1,2-Dichloroethene	8260B	11		ug/L	210
035	G4MW24 (012711)	Aqueous	Trichloroethene	8260B	2.8		ug/L	210
035	G4MW24 (012711)	Aqueous	Dissolved Arsenic	6010C	0.0056	J	mg/L	214
035	G4MW24 (012711)	Aqueous	Dissolved Barium	6010C	0.046		mg/L	214
035	G4MW24 (012711)	Aqueous	Barium	6010C	0.045		mg/L	215
035	G4MW24 (012711)	Aqueous	Chromium	6010C	0.0022	J	mg/L	215
036	G4MW13 (012711)	Aqueous	trans-1,2-Dichloroethene	8260B	1.3		ug/L	216
036	G4MW13 (012711)	Aqueous	cis-1,2-Dichloroethene	8260B	6.4		ug/L	216
036	G4MW13 (012711)	Aqueous	Trichloroethene	8260B	3.3		ug/L	216
036	G4MW13 (012711)	Aqueous	Dissolved Arsenic	6010C	0.0060	J	mg/L	220
036	G4MW13 (012711)	Aqueous	Dissolved Barium	6010C	0.023	J	mg/L	220
036	G4MW13 (012711)	Aqueous	Dissolved Cadmium	6010C	0.00068	J	mg/L	220
036	G4MW13 (012711)	Aqueous	Barium	6010C	0.023	J	mg/L	221
037	G4MW29 (012711)	Aqueous	trans-1,2-Dichloroethene	8260B	1.1		ug/L	222
037	G4MW29 (012711)	Aqueous	cis-1,2-Dichloroethene	8260B	3.7		ug/L	222
037	G4MW29 (012711)	Aqueous	Trichloroethene	8260B	2.9		ug/L	222
037	G4MW29 (012711)	Aqueous	Dissolved Arsenic	6010C	0.41		mg/L	226
037	G4MW29 (012711)	Aqueous	Dissolved Barium	6010C	2.0		mg/L	226
037	G4MW29 (012711)	Aqueous	Dissolved Cadmium	6010C	0.40		mg/L	226
037	G4MW29 (012711)	Aqueous	Dissolved Chromium	6010C	2.0		mg/L	226
037	G4MW29 (012711)	Aqueous	Dissolved Lead	6010C	0.38		mg/L	226
037	G4MW29 (012711)	Aqueous	Dissolved Selenium	6010C	0.41		mg/L	226
037	G4MW29 (012711)	Aqueous	Dissolved Silver	6010C	0.41		mg/L	226
037	G4MW29 (012711)	Aqueous	Barium	6010C	0.0076	J	mg/L	227
037	G4MW29 (012711)	Aqueous	Chromium	6010C	0.0062		mg/L	227
037	G4MW29 (012711)	Aqueous	Lead	6010C	0.010		mg/L	227
037	G4MW29 (012711)	Aqueous	Mercury	7470A	0.000057	J	mg/L	227
037	G4MW29 (012711)	Aqueous	Selenium	6010C	0.0045	J	mg/L	227
037	G4MW29 (012711)	Aqueous	Silver	6010C	0.00088	J	mg/L	227
038	G4MW36 (012711)	Aqueous	cis-1,2-Dichloroethene	8260B	0.53	J	ug/L	228
038	G4MW36 (012711)	Aqueous	Trichloroethene	8260B	0.38	J	ug/L	228
038	G4MW36 (012711)	Aqueous	Dissolved Arsenic	6010C	0.012		mg/L	232
038	G4MW36 (012711)	Aqueous	Dissolved Barium	6010C	0.019	J	mg/L	232
038	G4MW36 (012711)	Aqueous	Dissolved Selenium	6010C	0.0051	J	mg/L	232
038	G4MW36 (012711)	Aqueous	Arsenic	6010C	0.015		mg/L	233
038	G4MW36 (012711)	Aqueous	Barium	6010C	0.019	J	mg/L	233
038	G4MW36 (012711)	Aqueous	Lead	6010C	0.0032	J	mg/L	233
038	G4MW36 (012711)	Aqueous	Mercury	7470A	0.000055	J	mg/L	233
039	G4MW41 (012711)	Aqueous	trans-1,2-Dichloroethene	8260B	6.4	J	ug/L	234
039	G4MW41 (012711)	Aqueous	cis-1,2-Dichloroethene	8260B	97		ug/L	234
039	G4MW41 (012711)	Aqueous	Tetrachloroethene	8260B	290		ug/L	234
039	G4MW41 (012711)	Aqueous	Trichloroethene	8260B	550		ug/L	234
039	G4MW41 (012711)	Aqueous	Dissolved Barium	6010C	0.11		mg/L	238
039	G4MW41 (012711)	Aqueous	Dissolved Lead	6010C	0.011		mg/L	238
039	G4MW41 (012711)	Aqueous	Barium	6010C	0.11		mg/L	239

Sample	Sample ID	Matrix	Parameter	Method	Result	Q	Units	Page
039	G4MW41 (012711)	Aqueous	Chromium	6010C	0.0021	J	mg/L	239
039	G4MW41 (012711)	Aqueous	Lead	6010C	0.0058	J	mg/L	239
039	G4MW41 (012711)	Aqueous	Selenium	6010C	0.0044	J	mg/L	239
040	G4MW19 (012711)	Aqueous	Acetone	8260B	10	J	ug/L	240
040	G4MW19 (012711)	Aqueous	2-Butanone (MEK)	8260B	25		ug/L	240
040	G4MW19 (012711)	Aqueous	trans-1,2-Dichloroethene	8260B	5.4		ug/L	240
040	G4MW19 (012711)	Aqueous	cis-1,2-Dichloroethene	8260B	16		ug/L	240
040	G4MW19 (012711)	Aqueous	1,1-Dichloroethene	8260B	0.59	J	ug/L	240
040	G4MW19 (012711)	Aqueous	Trichloroethene	8260B	6.3		ug/L	240
040	G4MW19 (012711)	Aqueous	Dissolved Arsenic	6010C	0.0078	J	mg/L	244
040	G4MW19 (012711)	Aqueous	Dissolved Barium	6010C	0.057		mg/L	244
040	G4MW19 (012711)	Aqueous	Dissolved Selenium	6010C	0.0058	J	mg/L	244
040	G4MW19 (012711)	Aqueous	Arsenic	6010C	0.0076	J	mg/L	245
040	G4MW19 (012711)	Aqueous	Barium	6010C	0.057		mg/L	245
040	G4MW19 (012711)	Aqueous	Lead	6010C	0.016		mg/L	245
040	G4MW19 (012711)	Aqueous	Selenium	6010C	0.0057	J	mg/L	245

(349 detections)

Volatile Organic Compounds by GC/MS

Client: ARCADIS U.S., Inc.
Laboratory ID: MA26019-001
Description: G4MW31 (012511)
Matrix: Aqueous
Date Sampled: 01/25/2011 1020
Date Received: 01/26/2011

Run	Prep Method	Analytical Method	Dilution	Analysis Date	Analyst	Prep Date	Batch
1	5030B	8260B	1	01/28/2011 0021	DLB		51631

Parameter	CAS Number	Analytical Method	Result	Q	PQL	MDL	Units	Run
Acetone	67-64-1	8260B	ND		20	6.7	ug/L	1
Benzene	71-43-2	8260B	ND		1.0	0.13	ug/L	1
Bromodichloromethane	75-27-4	8260B	ND		1.0	0.33	ug/L	1
Bromoform	75-25-2	8260B	ND		1.0	0.66	ug/L	1
Bromomethane (Methyl bromide)	74-83-9	8260B	ND		2.0	0.80	ug/L	1
2-Butanone (MEK)	78-93-3	8260B	ND		10	2.0	ug/L	1
Carbon disulfide	75-15-0	8260B	ND		1.0	0.097	ug/L	1
Carbon tetrachloride	56-23-5	8260B	ND		1.0	0.14	ug/L	1
Chlorobenzene	108-90-7	8260B	ND		2.0	0.33	ug/L	1
Chloroethane	75-00-3	8260B	ND		2.0	0.47	ug/L	1
Chloroform	67-66-3	8260B	ND		1.0	0.33	ug/L	1
Chloromethane (Methyl chloride)	74-87-3	8260B	ND		1.0	0.35	ug/L	1
Dibromochloromethane	124-48-1	8260B	ND		1.0	0.33	ug/L	1
1,4-Dichlorobenzene	106-46-7	8260B	ND		1.0	0.33	ug/L	1
1,3-Dichlorobenzene	541-73-1	8260B	ND		1.0	0.33	ug/L	1
1,2-Dichlorobenzene	95-50-1	8260B	ND		1.0	0.33	ug/L	1
1,2-Dichloroethane	107-06-2	8260B	ND		1.0	0.15	ug/L	1
1,1-Dichloroethane	75-34-3	8260B	ND		1.0	0.13	ug/L	1
trans-1,2-Dichloroethene	156-60-5	8260B	ND		1.0	0.21	ug/L	1
cis-1,2-Dichloroethene	156-59-2	8260B	ND		1.0	0.12	ug/L	1
1,1-Dichloroethene	75-35-4	8260B	ND		1.0	0.16	ug/L	1
1,2-Dichloropropane	78-87-5	8260B	ND		1.0	0.19	ug/L	1
trans-1,3-Dichloropropene	10061-02-6	8260B	ND		1.0	0.11	ug/L	1
cis-1,3-Dichloropropene	10061-01-5	8260B	ND		1.0	0.092	ug/L	1
Ethylbenzene	100-41-4	8260B	ND		1.0	0.33	ug/L	1
2-Hexanone	591-78-6	8260B	ND		10	0.27	ug/L	1
Methyl tertiary butyl ether (MTBE)	1634-04-4	8260B	ND		1.0	0.40	ug/L	1
4-Methyl-2-pentanone	108-10-1	8260B	ND		10	0.31	ug/L	1
Methylene chloride	75-09-2	8260B	ND		1.0	0.33	ug/L	1
Styrene	100-42-5	8260B	ND		1.0	0.12	ug/L	1
1,1,2,2-Tetrachloroethane	79-34-5	8260B	ND		1.0	0.16	ug/L	1
Tetrachloroethene	127-18-4	8260B	ND		1.0	0.13	ug/L	1
Toluene	108-88-3	8260B	ND		1.0	0.33	ug/L	1
1,2,4-Trichlorobenzene	120-82-1	8260B	ND		1.0	0.51	ug/L	1
1,1,2-Trichloroethane	79-00-5	8260B	ND		1.0	0.21	ug/L	1
1,1,1-Trichloroethane	71-55-6	8260B	ND		1.0	0.074	ug/L	1
Trichloroethene	79-01-6	8260B	ND		1.0	0.18	ug/L	1
Vinyl chloride	75-01-4	8260B	ND		1.0	0.054	ug/L	1
Xylenes (total)	1330-20-7	8260B	ND		1.0	0.33	ug/L	1

PQL = Practical quantitation limit
B = Detected in the method blank
E = Quantitation of compound exceeded the calibration range
ND = Not detected at or above the MDL
J = Estimated result < PQL and ≥ MDL
P = The RPD between two GC columns exceeds 40%
Where applicable, all soil sample analysis are reported on a dry weight basis unless flagged with a "W"
N = Recovery is out of criteria
H = Out of holding time

Volatile Organic Compounds by GC/MS

Client: ARCADIS U.S., Inc.
Laboratory ID: MA26019-001
Description: G4MW31 (012511)
Matrix: Aqueous
Date Sampled: 01/25/2011 1020
Date Received: 01/26/2011

Surrogate	Q	Run 1 % Recovery	Acceptance Limits
1,2-Dichloroethane-d4		99	70-130
Bromofluorobenzene		104	70-130
Toluene-d8		102	70-130

PQL = Practical quantitation limit
B = Detected in the method blank
E = Quantitation of compound exceeded the calibration range
ND = Not detected at or above the MDL
J = Estimated result < PQL and ≥ MDL
P = The RPD between two GC columns exceeds 40%
Where applicable, all soil sample analysis are reported on a dry weight basis unless flagged with a "W"
N = Recovery is out of criteria
H = Out of holding time

Semivolatile Organic Compounds by GC/MS

Client: ARCADIS U.S., Inc.
Laboratory ID: MA26019-001
Description: G4MW31 (012511)
Matrix: Aqueous
Date Sampled: 01/25/2011 1020
Date Received: 01/26/2011

Run	Prep Method	Analytical Method	Dilution	Analysis Date	Analyst	Prep Date	Batch
1	3520C	8270D	1	02/01/2011 1926	WD	01/28/2011 1207	51601

Parameter	CAS Number	Analytical Method	Result	Q	PQL	MDL	Units	Run
Acenaphthene	83-32-9	8270D	ND		1.0	0.090	ug/L	1
Acenaphthylene	208-96-8	8270D	ND		1.0	0.16	ug/L	1
Anthracene	120-12-7	8270D	ND		1.0	0.13	ug/L	1
Benzo(a)anthracene	56-55-3	8270D	ND		1.0	0.15	ug/L	1
Benzo(a)pyrene	50-32-8	8270D	ND		1.0	0.16	ug/L	1
Benzo(b)fluoranthene	205-99-2	8270D	ND		1.0	0.20	ug/L	1
Benzo(g,h,i)perylene	191-24-2	8270D	ND		1.0	0.23	ug/L	1
Benzo(k)fluoranthene	207-08-9	8270D	ND		1.0	0.12	ug/L	1
4-Bromophenyl phenyl ether	101-55-3	8270D	ND		1.0	0.12	ug/L	1
Butyl benzyl phthalate	85-68-7	8270D	ND		5.0	1.7	ug/L	1
Carbazole	86-74-8	8270D	ND		1.0	0.25	ug/L	1
4-Chloro-3-methyl phenol	59-50-7	8270D	ND		1.0	0.22	ug/L	1
4-Chloroaniline	106-47-8	8270D	ND		1.0	0.13	ug/L	1
bis(2-Chloroethoxy)methane	111-91-1	8270D	ND		1.0	0.13	ug/L	1
bis(2-Chloroisopropyl)ether	108-60-1	8270D	ND		1.0	0.080	ug/L	1
2-Chloronaphthalene	91-58-7	8270D	ND		1.0	0.12	ug/L	1
2-Chlorophenol	95-57-8	8270D	ND		1.0	0.13	ug/L	1
4-Chlorophenyl phenyl ether	7005-72-3	8270D	ND		1.0	0.11	ug/L	1
Chrysene	218-01-9	8270D	ND		1.0	0.12	ug/L	1
Dibenzo(a,h)anthracene	53-70-3	8270D	ND		1.0	0.13	ug/L	1
Dibenzofuran	132-64-9	8270D	ND		1.0	0.16	ug/L	1
3,3'-Dichlorobenzidine	91-94-1	8270D	ND		5.0	0.81	ug/L	1
2,4-Dichlorophenol	120-83-2	8270D	ND		1.0	0.15	ug/L	1
Diethylphthalate	84-66-2	8270D	ND		5.0	1.7	ug/L	1
Dimethyl phthalate	131-11-3	8270D	ND		5.0	1.7	ug/L	1
2,4-Dimethylphenol	105-67-9	8270D	ND		1.0	0.31	ug/L	1
Di-n-butyl phthalate	84-74-2	8270D	ND		5.0	1.7	ug/L	1
4,6-Dinitro-2-methylphenol	534-52-1	8270D	ND		5.0	1.5	ug/L	1
2,4-Dinitrophenol	51-28-5	8270D	ND		5.0	0.25	ug/L	1
2,4-Dinitrotoluene	121-14-2	8270D	ND		2.0	0.45	ug/L	1
2,6-Dinitrotoluene	606-20-2	8270D	ND		2.0	0.40	ug/L	1
Di-n-octylphthalate	117-84-0	8270D	ND		5.0	1.7	ug/L	1
bis(2-Ethylhexyl)phthalate	117-81-7	8270D	ND		5.0	1.7	ug/L	1
Fluoranthene	206-44-0	8270D	ND		1.0	0.21	ug/L	1
Fluorene	86-73-7	8270D	ND		1.0	0.10	ug/L	1
Hexachlorobenzene	118-74-1	8270D	ND		1.0	0.21	ug/L	1
Hexachlorobutadiene	87-68-3	8270D	ND		1.0	0.090	ug/L	1
Hexachlorocyclopentadiene	77-47-4	8270D	ND		5.0	0.23	ug/L	1
Hexachloroethane	67-72-1	8270D	ND		1.0	0.11	ug/L	1
Indeno(1,2,3-c,d)pyrene	193-39-5	8270D	ND		1.0	0.23	ug/L	1
Isophorone	78-59-1	8270D	ND		1.0	0.080	ug/L	1
2-Methylnaphthalene	91-57-6	8270D	ND		1.0	0.080	ug/L	1
2-Methylphenol	95-48-7	8270D	ND		1.0	0.17	ug/L	1
3 & 4-Methylphenol	106-44-5	8270D	ND		2.0	0.57	ug/L	1

PQL = Practical quantitation limit
B = Detected in the method blank
E = Quantitation of compound exceeded the calibration range
ND = Not detected at or above the MDL
J = Estimated result < PQL and ≥ MDL
P = The RPD between two GC columns exceeds 40%
Where applicable, all soil sample analysis are reported on a dry weight basis unless flagged with a "W"
N = Recovery is out of criteria
H = Out of holding time

Semivolatile Organic Compounds by GC/MS

Client: ARCADIS U.S., Inc.
Laboratory ID: MA26019-001
Description: G4MW31 (012511)
Matrix: Aqueous
Date Sampled: 01/25/2011 1020
Date Received: 01/26/2011

Run	Prep Method	Analytical Method	Dilution	Analysis Date	Analyst	Prep Date	Batch
1	3520C	8270D	1	02/01/2011 1926	WD	01/28/2011 1207	51601

Parameter	CAS Number	Analytical Method	Result	Q	PQL	MDL	Units	Run
Naphthalene	91-20-3	8270D	ND		1.0	0.070	ug/L	1
2-Nitroaniline	88-74-4	8270D	ND		2.0	0.55	ug/L	1
3-Nitroaniline	99-09-2	8270D	ND		2.0	0.77	ug/L	1
4-Nitroaniline	100-01-6	8270D	ND		2.0	0.39	ug/L	1
Nitrobenzene	98-95-3	8270D	ND		1.0	0.10	ug/L	1
2-Nitrophenol	88-75-5	8270D	ND		2.0	0.27	ug/L	1
4-Nitrophenol	100-02-7	8270D	ND		5.0	0.64	ug/L	1
N-Nitrosodi-n-propylamine	621-64-7	8270D	ND		1.0	0.080	ug/L	1
N-Nitrosodiphenylamine (Diphenylamine)	86-30-6	8270D	ND		1.0	0.38	ug/L	1
Pentachlorophenol	87-86-5	8270D	ND		5.0	0.54	ug/L	1
Phenanthrene	85-01-8	8270D	ND		1.0	0.18	ug/L	1
Phenol	108-95-2	8270D	ND		1.0	0.11	ug/L	1
Pyrene	129-00-0	8270D	ND		1.0	0.16	ug/L	1
2,4,5-Trichlorophenol	95-95-4	8270D	ND		1.0	0.18	ug/L	1
2,4,6-Trichlorophenol	88-06-2	8270D	ND		1.0	0.22	ug/L	1

Surrogate	Q	Run 1 % Recovery	Acceptance Limits
2-Fluorobiphenyl		78	37-129
2-Fluorophenol		69	24-127
Nitrobenzene-d5		70	38-127
Phenol-d5		66	28-128
Terphenyl-d14		68	10-148
2,4,6-Tribromophenol		74	41-144

PQL = Practical quantitation limit
B = Detected in the method blank
E = Quantitation of compound exceeded the calibration range
ND = Not detected at or above the MDL
J = Estimated result < PQL and ≥ MDL
P = The RPD between two GC columns exceeds 40%
Where applicable, all soil sample analysis are reported on a dry weight basis unless flagged with a "W"
N = Recovery is out of criteria
H = Out of holding time

Dissolved RCRA Metals

Client: ARCADIS U.S., Inc.
Laboratory ID: MA26019-001
Description: G4MW31 (012511)
Matrix: Aqueous
Date Sampled: 01/25/2011 1020
Date Received: 01/26/2011

Run	Prep Method	Analytical Method	Dilution	Analysis Date	Analyst	Prep Date	Batch
1		7470A	1	01/28/2011 1558	BNW	01/28/2011 1145	51589
1	3005A	6010C	1	02/01/2011 0013	CDF	01/28/2011 0915	51574

Parameter	CAS Number	Analytical Method	Result	Q	PQL	MDL	Units	Run
Dissolved Arsenic	7440-38-2	6010C	ND		0.010	0.0040	mg/L	1
Dissolved Barium	7440-39-3	6010C	0.0084	J	0.025	0.0075	mg/L	1
Dissolved Cadmium	7440-43-9	6010C	ND		0.0020	0.00060	mg/L	1
Dissolved Chromium	7440-47-3	6010C	ND		0.0050	0.0021	mg/L	1
Dissolved Lead	7439-92-1	6010C	ND		0.010	0.0019	mg/L	1
Dissolved Mercury	7439-97-6	7470A	ND		0.00010	0.000053	mg/L	1
Dissolved Selenium	7782-49-2	6010C	ND		0.010	0.0026	mg/L	1
Dissolved Silver	7440-22-4	6010C	0.0011	J	0.0050	0.00040	mg/L	1

PQL = Practical quantitation limit
B = Detected in the method blank
E = Quantitation of compound exceeded the calibration range
ND = Not detected at or above the MDL
J = Estimated result < PQL and ≥ MDL
P = The RPD between two GC columns exceeds 40%
Where applicable, all soil sample analysis are reported on a dry weight basis unless flagged with a "W"
N = Recovery is out of criteria
H = Out of holding time

RCRA Metals

Client: ARCADIS U.S., Inc.
Laboratory ID: MA26019-001
Description: G4MW31 (012511)
Matrix: Aqueous
Date Sampled: 01/25/2011 1020
Date Received: 01/26/2011

Run	Prep Method	Analytical Method	Dilution	Analysis Date	Analyst	Prep Date	Batch
1		7470A	1	01/28/2011 1555	BNW	01/28/2011 1145	51589
1	3005A	6010C	1	02/01/2011 0409	CDF	01/27/2011 1005	51507

Parameter	CAS Number	Analytical Method	Result	Q	PQL	MDL	Units	Run
Arsenic	7440-38-2	6010C	ND		0.010	0.0040	mg/L	1
Barium	7440-39-3	6010C	0.0084	J	0.025	0.0075	mg/L	1
Cadmium	7440-43-9	6010C	ND		0.0020	0.00060	mg/L	1
Chromium	7440-47-3	6010C	ND		0.0050	0.0021	mg/L	1
Lead	7439-92-1	6010C	0.0035	J	0.010	0.0019	mg/L	1
Mercury	7439-97-6	7470A	ND		0.00010	0.000053	mg/L	1
Selenium	7782-49-2	6010C	ND		0.010	0.0026	mg/L	1
Silver	7440-22-4	6010C	0.00095	J	0.0050	0.00040	mg/L	1

PQL = Practical quantitation limit
B = Detected in the method blank
E = Quantitation of compound exceeded the calibration range
ND = Not detected at or above the MDL
J = Estimated result < PQL and ≥ MDL
P = The RPD between two GC columns exceeds 40%
Where applicable, all soil sample analysis are reported on a dry weight basis unless flagged with a "W"
N = Recovery is out of criteria
H = Out of holding time

Volatile Organic Compounds by GC/MS

Client: ARCADIS U.S., Inc.
Laboratory ID: MA26019-002
Description: G4MW32 (012511)
Matrix: Aqueous
Date Sampled: 01/25/2011 1340
Date Received: 01/26/2011

Run	Prep Method	Analytical Method	Dilution	Analysis Date	Analyst	Prep Date	Batch
1	5030B	8260B	1	01/28/2011 0044	DLB		51631

Parameter	CAS Number	Analytical Method	Result	Q	PQL	MDL	Units	Run
Acetone	67-64-1	8260B	ND		20	6.7	ug/L	1
Benzene	71-43-2	8260B	ND		1.0	0.13	ug/L	1
Bromodichloromethane	75-27-4	8260B	ND		1.0	0.33	ug/L	1
Bromoform	75-25-2	8260B	ND		1.0	0.66	ug/L	1
Bromomethane (Methyl bromide)	74-83-9	8260B	ND		2.0	0.80	ug/L	1
2-Butanone (MEK)	78-93-3	8260B	ND		10	2.0	ug/L	1
Carbon disulfide	75-15-0	8260B	ND		1.0	0.097	ug/L	1
Carbon tetrachloride	56-23-5	8260B	ND		1.0	0.14	ug/L	1
Chlorobenzene	108-90-7	8260B	ND		2.0	0.33	ug/L	1
Chloroethane	75-00-3	8260B	ND		2.0	0.47	ug/L	1
Chloroform	67-66-3	8260B	ND		1.0	0.33	ug/L	1
Chloromethane (Methyl chloride)	74-87-3	8260B	ND		1.0	0.35	ug/L	1
Dibromochloromethane	124-48-1	8260B	ND		1.0	0.33	ug/L	1
1,4-Dichlorobenzene	106-46-7	8260B	ND		1.0	0.33	ug/L	1
1,3-Dichlorobenzene	541-73-1	8260B	ND		1.0	0.33	ug/L	1
1,2-Dichlorobenzene	95-50-1	8260B	ND		1.0	0.33	ug/L	1
1,2-Dichloroethane	107-06-2	8260B	ND		1.0	0.15	ug/L	1
1,1-Dichloroethane	75-34-3	8260B	ND		1.0	0.13	ug/L	1
trans-1,2-Dichloroethene	156-60-5	8260B	ND		1.0	0.21	ug/L	1
cis-1,2-Dichloroethene	156-59-2	8260B	1.9		1.0	0.12	ug/L	1
1,1-Dichloroethene	75-35-4	8260B	ND		1.0	0.16	ug/L	1
1,2-Dichloropropane	78-87-5	8260B	ND		1.0	0.19	ug/L	1
trans-1,3-Dichloropropene	10061-02-6	8260B	ND		1.0	0.11	ug/L	1
cis-1,3-Dichloropropene	10061-01-5	8260B	ND		1.0	0.092	ug/L	1
Ethylbenzene	100-41-4	8260B	ND		1.0	0.33	ug/L	1
2-Hexanone	591-78-6	8260B	ND		10	0.27	ug/L	1
Methyl tertiary butyl ether (MTBE)	1634-04-4	8260B	ND		1.0	0.40	ug/L	1
4-Methyl-2-pentanone	108-10-1	8260B	ND		10	0.31	ug/L	1
Methylene chloride	75-09-2	8260B	ND		1.0	0.33	ug/L	1
Styrene	100-42-5	8260B	ND		1.0	0.12	ug/L	1
1,1,2,2-Tetrachloroethane	79-34-5	8260B	ND		1.0	0.16	ug/L	1
Tetrachloroethene	127-18-4	8260B	12		1.0	0.13	ug/L	1
Toluene	108-88-3	8260B	ND		1.0	0.33	ug/L	1
1,2,4-Trichlorobenzene	120-82-1	8260B	ND		1.0	0.51	ug/L	1
1,1,2-Trichloroethane	79-00-5	8260B	ND		1.0	0.21	ug/L	1
1,1,1-Trichloroethane	71-55-6	8260B	ND		1.0	0.074	ug/L	1
Trichloroethene	79-01-6	8260B	14		1.0	0.18	ug/L	1
Vinyl chloride	75-01-4	8260B	ND		1.0	0.054	ug/L	1
Xylenes (total)	1330-20-7	8260B	ND		1.0	0.33	ug/L	1

PQL = Practical quantitation limit
B = Detected in the method blank
E = Quantitation of compound exceeded the calibration range
ND = Not detected at or above the MDL
J = Estimated result < PQL and ≥ MDL
P = The RPD between two GC columns exceeds 40%
Where applicable, all soil sample analysis are reported on a dry weight basis unless flagged with a "W"
N = Recovery is out of criteria
H = Out of holding time

Volatile Organic Compounds by GC/MS

Client: ARCADIS U.S., Inc.
Laboratory ID: MA26019-002
Description: G4MW32 (012511)
Matrix: Aqueous
Date Sampled: 01/25/2011 1340
Date Received: 01/26/2011

Surrogate	Q	Run 1 % Recovery	Acceptance Limits
1,2-Dichloroethane-d4		100	70-130
Bromofluorobenzene		109	70-130
Toluene-d8		102	70-130

PQL = Practical quantitation limit
B = Detected in the method blank
E = Quantitation of compound exceeded the calibration range
ND = Not detected at or above the MDL
J = Estimated result < PQL and ≥ MDL
P = The RPD between two GC columns exceeds 40%
Where applicable, all soil sample analysis are reported on a dry weight basis unless flagged with a "W"
N = Recovery is out of criteria
H = Out of holding time

Semivolatile Organic Compounds by GC/MS

Client: ARCADIS U.S., Inc.
Laboratory ID: MA26019-002
Description: G4MW32 (012511)
Matrix: Aqueous
Date Sampled: 01/25/2011 1340
Date Received: 01/26/2011

Run	Prep Method	Analytical Method	Dilution	Analysis Date	Analyst	Prep Date	Batch
1	3520C	8270D	1	02/01/2011 1945	WD	01/28/2011 1207	51601

Parameter	CAS Number	Analytical Method	Result	Q	PQL	MDL	Units	Run
Acenaphthene	83-32-9	8270D	ND		1.0	0.090	ug/L	1
Acenaphthylene	208-96-8	8270D	ND		1.0	0.16	ug/L	1
Anthracene	120-12-7	8270D	ND		1.0	0.13	ug/L	1
Benzo(a)anthracene	56-55-3	8270D	ND		1.0	0.15	ug/L	1
Benzo(a)pyrene	50-32-8	8270D	ND		1.0	0.16	ug/L	1
Benzo(b)fluoranthene	205-99-2	8270D	ND		1.0	0.20	ug/L	1
Benzo(g,h,i)perylene	191-24-2	8270D	ND		1.0	0.23	ug/L	1
Benzo(k)fluoranthene	207-08-9	8270D	ND		1.0	0.12	ug/L	1
4-Bromophenyl phenyl ether	101-55-3	8270D	ND		1.0	0.12	ug/L	1
Butyl benzyl phthalate	85-68-7	8270D	ND		5.0	1.7	ug/L	1
Carbazole	86-74-8	8270D	ND		1.0	0.25	ug/L	1
4-Chloro-3-methyl phenol	59-50-7	8270D	ND		1.0	0.22	ug/L	1
4-Chloroaniline	106-47-8	8270D	ND		1.0	0.13	ug/L	1
bis(2-Chloroethoxy)methane	111-91-1	8270D	ND		1.0	0.13	ug/L	1
bis(2-Chloroisopropyl)ether	108-60-1	8270D	ND		1.0	0.080	ug/L	1
2-Chloronaphthalene	91-58-7	8270D	ND		1.0	0.12	ug/L	1
2-Chlorophenol	95-57-8	8270D	ND		1.0	0.13	ug/L	1
4-Chlorophenyl phenyl ether	7005-72-3	8270D	ND		1.0	0.11	ug/L	1
Chrysene	218-01-9	8270D	ND		1.0	0.12	ug/L	1
Dibenzo(a,h)anthracene	53-70-3	8270D	ND		1.0	0.13	ug/L	1
Dibenzofuran	132-64-9	8270D	ND		1.0	0.16	ug/L	1
3,3'-Dichlorobenzidine	91-94-1	8270D	ND		5.0	0.81	ug/L	1
2,4-Dichlorophenol	120-83-2	8270D	ND		1.0	0.15	ug/L	1
Diethylphthalate	84-66-2	8270D	ND		5.0	1.7	ug/L	1
Dimethyl phthalate	131-11-3	8270D	ND		5.0	1.7	ug/L	1
2,4-Dimethylphenol	105-67-9	8270D	ND		1.0	0.31	ug/L	1
Di-n-butyl phthalate	84-74-2	8270D	ND		5.0	1.7	ug/L	1
4,6-Dinitro-2-methylphenol	534-52-1	8270D	ND		5.0	1.5	ug/L	1
2,4-Dinitrophenol	51-28-5	8270D	ND		5.0	0.25	ug/L	1
2,4-Dinitrotoluene	121-14-2	8270D	ND		2.0	0.45	ug/L	1
2,6-Dinitrotoluene	606-20-2	8270D	ND		2.0	0.40	ug/L	1
Di-n-octylphthalate	117-84-0	8270D	ND		5.0	1.7	ug/L	1
bis(2-Ethylhexyl)phthalate	117-81-7	8270D	ND		5.0	1.7	ug/L	1
Fluoranthene	206-44-0	8270D	ND		1.0	0.21	ug/L	1
Fluorene	86-73-7	8270D	ND		1.0	0.10	ug/L	1
Hexachlorobenzene	118-74-1	8270D	ND		1.0	0.21	ug/L	1
Hexachlorobutadiene	87-68-3	8270D	ND		1.0	0.090	ug/L	1
Hexachlorocyclopentadiene	77-47-4	8270D	ND		5.0	0.23	ug/L	1
Hexachloroethane	67-72-1	8270D	ND		1.0	0.11	ug/L	1
Indeno(1,2,3-c,d)pyrene	193-39-5	8270D	ND		1.0	0.23	ug/L	1
Isophorone	78-59-1	8270D	ND		1.0	0.080	ug/L	1
2-Methylnaphthalene	91-57-6	8270D	ND		1.0	0.080	ug/L	1
2-Methylphenol	95-48-7	8270D	ND		1.0	0.17	ug/L	1
3 & 4-Methylphenol	106-44-5	8270D	ND		2.0	0.57	ug/L	1

PQL = Practical quantitation limit
B = Detected in the method blank
E = Quantitation of compound exceeded the calibration range
ND = Not detected at or above the MDL
J = Estimated result < PQL and ≥ MDL
P = The RPD between two GC columns exceeds 40%
Where applicable, all soil sample analysis are reported on a dry weight basis unless flagged with a "W"
N = Recovery is out of criteria
H = Out of holding time

Semivolatile Organic Compounds by GC/MS

Client: ARCADIS U.S., Inc.
Laboratory ID: MA26019-002
Description: G4MW32 (012511)
Matrix: Aqueous
Date Sampled: 01/25/2011 1340
Date Received: 01/26/2011

Run	Prep Method	Analytical Method	Dilution	Analysis Date	Analyst	Prep Date	Batch
1	3520C	8270D	1	02/01/2011 1945	WD	01/28/2011 1207	51601

Parameter	CAS Number	Analytical Method	Result	Q	PQL	MDL	Units	Run
Naphthalene	91-20-3	8270D	ND		1.0	0.070	ug/L	1
2-Nitroaniline	88-74-4	8270D	ND		2.0	0.55	ug/L	1
3-Nitroaniline	99-09-2	8270D	ND		2.0	0.77	ug/L	1
4-Nitroaniline	100-01-6	8270D	ND		2.0	0.39	ug/L	1
Nitrobenzene	98-95-3	8270D	ND		1.0	0.10	ug/L	1
2-Nitrophenol	88-75-5	8270D	ND		2.0	0.27	ug/L	1
4-Nitrophenol	100-02-7	8270D	ND		5.0	0.64	ug/L	1
N-Nitrosodi-n-propylamine	621-64-7	8270D	ND		1.0	0.080	ug/L	1
N-Nitrosodiphenylamine (Diphenylamine)	86-30-6	8270D	ND		1.0	0.38	ug/L	1
Pentachlorophenol	87-86-5	8270D	ND		5.0	0.54	ug/L	1
Phenanthrene	85-01-8	8270D	ND		1.0	0.18	ug/L	1
Phenol	108-95-2	8270D	ND		1.0	0.11	ug/L	1
Pyrene	129-00-0	8270D	ND		1.0	0.16	ug/L	1
2,4,5-Trichlorophenol	95-95-4	8270D	ND		1.0	0.18	ug/L	1
2,4,6-Trichlorophenol	88-06-2	8270D	ND		1.0	0.22	ug/L	1

Surrogate	Q	Run 1 % Recovery	Acceptance Limits
2-Fluorobiphenyl		81	37-129
2-Fluorophenol		76	24-127
Nitrobenzene-d5		84	38-127
Phenol-d5		76	28-128
Terphenyl-d14		65	10-148
2,4,6-Tribromophenol		84	41-144

PQL = Practical quantitation limit
B = Detected in the method blank
E = Quantitation of compound exceeded the calibration range
ND = Not detected at or above the MDL
J = Estimated result < PQL and ≥ MDL
P = The RPD between two GC columns exceeds 40%
Where applicable, all soil sample analysis are reported on a dry weight basis unless flagged with a "W"
N = Recovery is out of criteria
H = Out of holding time

Dissolved RCRA Metals

Client: ARCADIS U.S., Inc.
Laboratory ID: MA26019-002
Description: G4MW32 (012511)
Matrix: Aqueous
Date Sampled: 01/25/2011 1340
Date Received: 01/26/2011

Run	Prep Method	Analytical Method	Dilution	Analysis Date	Analyst	Prep Date	Batch
1		7470A	1	01/28/2011 1608	BNW	01/28/2011 1145	51589
1	3005A	6010C	1	02/01/2011 0019	CDF	01/28/2011 0915	51574

Parameter	CAS Number	Analytical Method	Result	Q	PQL	MDL	Units	Run
Dissolved Arsenic	7440-38-2	6010C	ND		0.010	0.0040	mg/L	1
Dissolved Barium	7440-39-3	6010C	0.12		0.025	0.0075	mg/L	1
Dissolved Cadmium	7440-43-9	6010C	0.00066	J	0.0020	0.00060	mg/L	1
Dissolved Chromium	7440-47-3	6010C	ND		0.0050	0.0021	mg/L	1
Dissolved Lead	7439-92-1	6010C	0.0021	J	0.010	0.0019	mg/L	1
Dissolved Mercury	7439-97-6	7470A	ND		0.00010	0.000053	mg/L	1
Dissolved Selenium	7782-49-2	6010C	ND		0.010	0.0026	mg/L	1
Dissolved Silver	7440-22-4	6010C	0.0017	J	0.0050	0.00040	mg/L	1

PQL = Practical quantitation limit
B = Detected in the method blank
E = Quantitation of compound exceeded the calibration range
ND = Not detected at or above the MDL
J = Estimated result < PQL and ≥ MDL
P = The RPD between two GC columns exceeds 40%
Where applicable, all soil sample analysis are reported on a dry weight basis unless flagged with a "W"
N = Recovery is out of criteria
H = Out of holding time

RCRA Metals

Client: ARCADIS U.S., Inc.
Laboratory ID: MA26019-002
Description: G4MW32 (012511)
Matrix: Aqueous
Date Sampled: 01/25/2011 1340
Date Received: 01/26/2011

Run	Prep Method	Analytical Method	Dilution	Analysis Date	Analyst	Prep Date	Batch
1		7470A	1	01/28/2011 1600	BNW	01/28/2011 1145	51589
1	3005A	6010C	1	02/01/2011 0413	CDF	01/27/2011 1005	51507

Parameter	CAS Number	Analytical Method	Result	Q	PQL	MDL	Units	Run
Arsenic	7440-38-2	6010C	ND		0.010	0.0040	mg/L	1
Barium	7440-39-3	6010C	0.13		0.025	0.0075	mg/L	1
Cadmium	7440-43-9	6010C	ND		0.0020	0.00060	mg/L	1
Chromium	7440-47-3	6010C	ND		0.0050	0.0021	mg/L	1
Lead	7439-92-1	6010C	ND		0.010	0.0019	mg/L	1
Mercury	7439-97-6	7470A	0.000057	J	0.00010	0.000053	mg/L	1
Selenium	7782-49-2	6010C	ND		0.010	0.0026	mg/L	1
Silver	7440-22-4	6010C	0.0057		0.0050	0.00040	mg/L	1

PQL = Practical quantitation limit
B = Detected in the method blank
E = Quantitation of compound exceeded the calibration range
ND = Not detected at or above the MDL
J = Estimated result < PQL and ≥ MDL
P = The RPD between two GC columns exceeds 40%
Where applicable, all soil sample analysis are reported on a dry weight basis unless flagged with a "W"
N = Recovery is out of criteria
H = Out of holding time

Volatile Organic Compounds by GC/MS

Client: ARCADIS U.S., Inc.
Laboratory ID: MA26019-003
Description: G4MW14 (012511)
Matrix: Aqueous
Date Sampled: 01/25/2011 1430
Date Received: 01/26/2011

Run	Prep Method	Analytical Method	Dilution	Analysis Date	Analyst	Prep Date	Batch
1	5030B	8260B	1	01/28/2011 0153	DLB		51631

Parameter	CAS Number	Analytical Method	Result	Q	PQL	MDL	Units	Run
Acetone	67-64-1	8260B	ND		20	6.7	ug/L	1
Benzene	71-43-2	8260B	ND		1.0	0.13	ug/L	1
Bromodichloromethane	75-27-4	8260B	ND		1.0	0.33	ug/L	1
Bromoform	75-25-2	8260B	ND		1.0	0.66	ug/L	1
Bromomethane (Methyl bromide)	74-83-9	8260B	ND		2.0	0.80	ug/L	1
2-Butanone (MEK)	78-93-3	8260B	ND		10	2.0	ug/L	1
Carbon disulfide	75-15-0	8260B	ND		1.0	0.097	ug/L	1
Carbon tetrachloride	56-23-5	8260B	ND		1.0	0.14	ug/L	1
Chlorobenzene	108-90-7	8260B	ND		2.0	0.33	ug/L	1
Chloroethane	75-00-3	8260B	ND		2.0	0.47	ug/L	1
Chloroform	67-66-3	8260B	ND		1.0	0.33	ug/L	1
Chloromethane (Methyl chloride)	74-87-3	8260B	ND		1.0	0.35	ug/L	1
Dibromochloromethane	124-48-1	8260B	ND		1.0	0.33	ug/L	1
1,4-Dichlorobenzene	106-46-7	8260B	ND		1.0	0.33	ug/L	1
1,3-Dichlorobenzene	541-73-1	8260B	ND		1.0	0.33	ug/L	1
1,2-Dichlorobenzene	95-50-1	8260B	ND		1.0	0.33	ug/L	1
1,2-Dichloroethane	107-06-2	8260B	ND		1.0	0.15	ug/L	1
1,1-Dichloroethane	75-34-3	8260B	ND		1.0	0.13	ug/L	1
trans-1,2-Dichloroethene	156-60-5	8260B	ND		1.0	0.21	ug/L	1
cis-1,2-Dichloroethene	156-59-2	8260B	ND		1.0	0.12	ug/L	1
1,1-Dichloroethene	75-35-4	8260B	ND		1.0	0.16	ug/L	1
1,2-Dichloropropane	78-87-5	8260B	ND		1.0	0.19	ug/L	1
trans-1,3-Dichloropropene	10061-02-6	8260B	ND		1.0	0.11	ug/L	1
cis-1,3-Dichloropropene	10061-01-5	8260B	ND		1.0	0.092	ug/L	1
Ethylbenzene	100-41-4	8260B	ND		1.0	0.33	ug/L	1
2-Hexanone	591-78-6	8260B	ND		10	0.27	ug/L	1
Methyl tertiary butyl ether (MTBE)	1634-04-4	8260B	ND		1.0	0.40	ug/L	1
4-Methyl-2-pentanone	108-10-1	8260B	ND		10	0.31	ug/L	1
Methylene chloride	75-09-2	8260B	ND		1.0	0.33	ug/L	1
Styrene	100-42-5	8260B	ND		1.0	0.12	ug/L	1
1,1,2,2-Tetrachloroethane	79-34-5	8260B	ND		1.0	0.16	ug/L	1
Tetrachloroethene	127-18-4	8260B	ND		1.0	0.13	ug/L	1
Toluene	108-88-3	8260B	ND		1.0	0.33	ug/L	1
1,2,4-Trichlorobenzene	120-82-1	8260B	ND		1.0	0.51	ug/L	1
1,1,2-Trichloroethane	79-00-5	8260B	ND		1.0	0.21	ug/L	1
1,1,1-Trichloroethane	71-55-6	8260B	ND		1.0	0.074	ug/L	1
Trichloroethene	79-01-6	8260B	ND		1.0	0.18	ug/L	1
Vinyl chloride	75-01-4	8260B	ND		1.0	0.054	ug/L	1
Xylenes (total)	1330-20-7	8260B	ND		1.0	0.33	ug/L	1

PQL = Practical quantitation limit
B = Detected in the method blank
E = Quantitation of compound exceeded the calibration range
ND = Not detected at or above the MDL
J = Estimated result < PQL and ≥ MDL
P = The RPD between two GC columns exceeds 40%
Where applicable, all soil sample analysis are reported on a dry weight basis unless flagged with a "W"
N = Recovery is out of criteria
H = Out of holding time

Volatile Organic Compounds by GC/MS

Client: ARCADIS U.S., Inc.
Laboratory ID: MA26019-003
Description: G4MW14 (012511)
Matrix: Aqueous
Date Sampled: 01/25/2011 1430
Date Received: 01/26/2011

Surrogate	Q	Run 1 % Recovery	Acceptance Limits
1,2-Dichloroethane-d4		103	70-130
Bromofluorobenzene		111	70-130
Toluene-d8		103	70-130

PQL = Practical quantitation limit
B = Detected in the method blank
E = Quantitation of compound exceeded the calibration range
ND = Not detected at or above the MDL
J = Estimated result < PQL and ≥ MDL
P = The RPD between two GC columns exceeds 40%
Where applicable, all soil sample analysis are reported on a dry weight basis unless flagged with a "W"
N = Recovery is out of criteria
H = Out of holding time

Semivolatile Organic Compounds by GC/MS

Client: ARCADIS U.S., Inc.
Laboratory ID: MA26019-003
Description: G4MW14 (012511)
Matrix: Aqueous
Date Sampled: 01/25/2011 1430
Date Received: 01/26/2011

Run	Prep Method	Analytical Method	Dilution	Analysis Date	Analyst	Prep Date	Batch
1	3520C	8270D	1	02/01/2011 2043	WD	01/28/2011 1207	51601

Parameter	CAS Number	Analytical Method	Result	Q	PQL	MDL	Units	Run
Acenaphthene	83-32-9	8270D	ND		1.0	0.090	ug/L	1
Acenaphthylene	208-96-8	8270D	ND		1.0	0.16	ug/L	1
Anthracene	120-12-7	8270D	ND		1.0	0.13	ug/L	1
Benzo(a)anthracene	56-55-3	8270D	ND		1.0	0.15	ug/L	1
Benzo(a)pyrene	50-32-8	8270D	ND		1.0	0.16	ug/L	1
Benzo(b)fluoranthene	205-99-2	8270D	ND		1.0	0.20	ug/L	1
Benzo(g,h,i)perylene	191-24-2	8270D	ND		1.0	0.23	ug/L	1
Benzo(k)fluoranthene	207-08-9	8270D	ND		1.0	0.12	ug/L	1
4-Bromophenyl phenyl ether	101-55-3	8270D	ND		1.0	0.12	ug/L	1
Butyl benzyl phthalate	85-68-7	8270D	ND		5.0	1.7	ug/L	1
Carbazole	86-74-8	8270D	ND		1.0	0.25	ug/L	1
4-Chloro-3-methyl phenol	59-50-7	8270D	ND		1.0	0.22	ug/L	1
4-Chloroaniline	106-47-8	8270D	ND		1.0	0.13	ug/L	1
bis(2-Chloroethoxy)methane	111-91-1	8270D	ND		1.0	0.13	ug/L	1
bis(2-Chloroisopropyl)ether	108-60-1	8270D	ND		1.0	0.080	ug/L	1
2-Chloronaphthalene	91-58-7	8270D	ND		1.0	0.12	ug/L	1
2-Chlorophenol	95-57-8	8270D	ND		1.0	0.13	ug/L	1
4-Chlorophenyl phenyl ether	7005-72-3	8270D	ND		1.0	0.11	ug/L	1
Chrysene	218-01-9	8270D	ND		1.0	0.12	ug/L	1
Dibenzo(a,h)anthracene	53-70-3	8270D	ND		1.0	0.13	ug/L	1
Dibenzofuran	132-64-9	8270D	ND		1.0	0.16	ug/L	1
3,3'-Dichlorobenzidine	91-94-1	8270D	ND		5.0	0.81	ug/L	1
2,4-Dichlorophenol	120-83-2	8270D	ND		1.0	0.15	ug/L	1
Diethylphthalate	84-66-2	8270D	ND		5.0	1.7	ug/L	1
Dimethyl phthalate	131-11-3	8270D	ND		5.0	1.7	ug/L	1
2,4-Dimethylphenol	105-67-9	8270D	ND		1.0	0.31	ug/L	1
Di-n-butyl phthalate	84-74-2	8270D	ND		5.0	1.7	ug/L	1
4,6-Dinitro-2-methylphenol	534-52-1	8270D	ND		5.0	1.5	ug/L	1
2,4-Dinitrophenol	51-28-5	8270D	ND		5.0	0.25	ug/L	1
2,4-Dinitrotoluene	121-14-2	8270D	ND		2.0	0.45	ug/L	1
2,6-Dinitrotoluene	606-20-2	8270D	ND		2.0	0.40	ug/L	1
Di-n-octylphthalate	117-84-0	8270D	ND		5.0	1.7	ug/L	1
bis(2-Ethylhexyl)phthalate	117-81-7	8270D	ND		5.0	1.7	ug/L	1
Fluoranthene	206-44-0	8270D	ND		1.0	0.21	ug/L	1
Fluorene	86-73-7	8270D	ND		1.0	0.10	ug/L	1
Hexachlorobenzene	118-74-1	8270D	ND		1.0	0.21	ug/L	1
Hexachlorobutadiene	87-68-3	8270D	ND		1.0	0.090	ug/L	1
Hexachlorocyclopentadiene	77-47-4	8270D	ND		5.0	0.23	ug/L	1
Hexachloroethane	67-72-1	8270D	ND		1.0	0.11	ug/L	1
Indeno(1,2,3-c,d)pyrene	193-39-5	8270D	ND		1.0	0.23	ug/L	1
Isophorone	78-59-1	8270D	ND		1.0	0.080	ug/L	1
2-Methylnaphthalene	91-57-6	8270D	ND		1.0	0.080	ug/L	1
2-Methylphenol	95-48-7	8270D	ND		1.0	0.17	ug/L	1
3 & 4-Methylphenol	106-44-5	8270D	ND		2.0	0.57	ug/L	1

PQL = Practical quantitation limit
B = Detected in the method blank
E = Quantitation of compound exceeded the calibration range
ND = Not detected at or above the MDL
J = Estimated result < PQL and ≥ MDL
P = The RPD between two GC columns exceeds 40%
Where applicable, all soil sample analysis are reported on a dry weight basis unless flagged with a "W"
N = Recovery is out of criteria
H = Out of holding time

Semivolatile Organic Compounds by GC/MS

Client: ARCADIS U.S., Inc.
Laboratory ID: MA26019-003
Description: G4MW14 (012511)
Matrix: Aqueous
Date Sampled: 01/25/2011 1430
Date Received: 01/26/2011

Run	Prep Method	Analytical Method	Dilution	Analysis Date	Analyst	Prep Date	Batch
1	3520C	8270D	1	02/01/2011 2043	WD	01/28/2011 1207	51601

Parameter	CAS Number	Analytical Method	Result	Q	PQL	MDL	Units	Run
Naphthalene	91-20-3	8270D	ND		1.0	0.070	ug/L	1
2-Nitroaniline	88-74-4	8270D	ND		2.0	0.55	ug/L	1
3-Nitroaniline	99-09-2	8270D	ND		2.0	0.77	ug/L	1
4-Nitroaniline	100-01-6	8270D	ND		2.0	0.39	ug/L	1
Nitrobenzene	98-95-3	8270D	ND		1.0	0.10	ug/L	1
2-Nitrophenol	88-75-5	8270D	ND		2.0	0.27	ug/L	1
4-Nitrophenol	100-02-7	8270D	ND		5.0	0.64	ug/L	1
N-Nitrosodi-n-propylamine	621-64-7	8270D	ND		1.0	0.080	ug/L	1
N-Nitrosodiphenylamine (Diphenylamine)	86-30-6	8270D	ND		1.0	0.38	ug/L	1
Pentachlorophenol	87-86-5	8270D	ND		5.0	0.54	ug/L	1
Phenanthrene	85-01-8	8270D	ND		1.0	0.18	ug/L	1
Phenol	108-95-2	8270D	ND		1.0	0.11	ug/L	1
Pyrene	129-00-0	8270D	ND		1.0	0.16	ug/L	1
2,4,5-Trichlorophenol	95-95-4	8270D	ND		1.0	0.18	ug/L	1
2,4,6-Trichlorophenol	88-06-2	8270D	ND		1.0	0.22	ug/L	1

Surrogate	Q	Run 1 % Recovery	Acceptance Limits
2-Fluorobiphenyl		73	37-129
2-Fluorophenol		70	24-127
Nitrobenzene-d5		74	38-127
Phenol-d5		70	28-128
Terphenyl-d14		48	10-148
2,4,6-Tribromophenol		78	41-144

PQL = Practical quantitation limit
B = Detected in the method blank
E = Quantitation of compound exceeded the calibration range
ND = Not detected at or above the MDL
J = Estimated result < PQL and ≥ MDL
P = The RPD between two GC columns exceeds 40%
Where applicable, all soil sample analysis are reported on a dry weight basis unless flagged with a "W"
N = Recovery is out of criteria
H = Out of holding time

Dissolved RCRA Metals

Client: ARCADIS U.S., Inc.
Laboratory ID: MA26019-003
Description: G4MW14 (012511)
Matrix: Aqueous
Date Sampled: 01/25/2011 1430
Date Received: 01/26/2011

Run	Prep Method	Analytical Method	Dilution	Analysis Date	Analyst	Prep Date	Batch
1		7470A	1	01/28/2011 1613	BNW	01/28/2011 1145	51589
1	3005A	6010C	1	02/01/2011 0026	CDF	01/28/2011 0915	51574

Parameter	CAS Number	Analytical Method	Result	Q	PQL	MDL	Units	Run
Dissolved Arsenic	7440-38-2	6010C	ND		0.010	0.0040	mg/L	1
Dissolved Barium	7440-39-3	6010C	0.016	J	0.025	0.0075	mg/L	1
Dissolved Cadmium	7440-43-9	6010C	ND		0.0020	0.00060	mg/L	1
Dissolved Chromium	7440-47-3	6010C	ND		0.0050	0.0021	mg/L	1
Dissolved Lead	7439-92-1	6010C	ND		0.010	0.0019	mg/L	1
Dissolved Mercury	7439-97-6	7470A	ND		0.00010	0.000053	mg/L	1
Dissolved Selenium	7782-49-2	6010C	ND		0.010	0.0026	mg/L	1
Dissolved Silver	7440-22-4	6010C	0.0014	J	0.0050	0.00040	mg/L	1

PQL = Practical quantitation limit
B = Detected in the method blank
E = Quantitation of compound exceeded the calibration range
ND = Not detected at or above the MDL
J = Estimated result < PQL and ≥ MDL
P = The RPD between two GC columns exceeds 40%
Where applicable, all soil sample analysis are reported on a dry weight basis unless flagged with a "W"
N = Recovery is out of criteria
H = Out of holding time

RCRA Metals

Client: ARCADIS U.S., Inc.
Laboratory ID: MA26019-003
Description: G4MW14 (012511)
Matrix: Aqueous
Date Sampled: 01/25/2011 1430
Date Received: 01/26/2011

Run	Prep Method	Analytical Method	Dilution	Analysis Date	Analyst	Prep Date	Batch
1		7470A	1	01/28/2011 1611	BNW	01/28/2011 1145	51589
1	3005A	6010C	1	02/01/2011 0417	CDF	01/27/2011 1005	51507

Parameter	CAS Number	Analytical Method	Result	Q	PQL	MDL	Units	Run
Arsenic	7440-38-2	6010C	ND		0.010	0.0040	mg/L	1
Barium	7440-39-3	6010C	0.016	J	0.025	0.0075	mg/L	1
Cadmium	7440-43-9	6010C	ND		0.0020	0.00060	mg/L	1
Chromium	7440-47-3	6010C	ND		0.0050	0.0021	mg/L	1
Lead	7439-92-1	6010C	ND		0.010	0.0019	mg/L	1
Mercury	7439-97-6	7470A	0.000054	J	0.00010	0.000053	mg/L	1
Selenium	7782-49-2	6010C	ND		0.010	0.0026	mg/L	1
Silver	7440-22-4	6010C	ND		0.0050	0.00040	mg/L	1

PQL = Practical quantitation limit
B = Detected in the method blank
E = Quantitation of compound exceeded the calibration range
ND = Not detected at or above the MDL
J = Estimated result < PQL and ≥ MDL
P = The RPD between two GC columns exceeds 40%
Where applicable, all soil sample analysis are reported on a dry weight basis unless flagged with a "W"
N = Recovery is out of criteria
H = Out of holding time

Volatile Organic Compounds by GC/MS

Client: ARCADIS U.S., Inc.
Laboratory ID: MA26019-004
Description: DUP02 (012511)
Matrix: Aqueous
Date Sampled: 01/25/2011
Date Received: 01/26/2011

Run	Prep Method	Analytical Method	Dilution	Analysis Date	Analyst	Prep Date	Batch
1	5030B	8260B	1	01/29/2011 0219	DLB		52835

Parameter	CAS Number	Analytical Method	Result	Q	PQL	MDL	Units	Run
Acetone	67-64-1	8260B	ND		20	6.7	ug/L	1
Benzene	71-43-2	8260B	0.19	J	1.0	0.13	ug/L	1
Bromodichloromethane	75-27-4	8260B	ND		1.0	0.33	ug/L	1
Bromoform	75-25-2	8260B	ND		1.0	0.66	ug/L	1
Bromomethane (Methyl bromide)	74-83-9	8260B	ND		2.0	0.80	ug/L	1
2-Butanone (MEK)	78-93-3	8260B	ND		10	2.0	ug/L	1
Carbon disulfide	75-15-0	8260B	ND		1.0	0.097	ug/L	1
Carbon tetrachloride	56-23-5	8260B	ND		1.0	0.14	ug/L	1
Chlorobenzene	108-90-7	8260B	ND		2.0	0.33	ug/L	1
Chloroethane	75-00-3	8260B	ND		2.0	0.47	ug/L	1
Chloroform	67-66-3	8260B	ND		1.0	0.33	ug/L	1
Chloromethane (Methyl chloride)	74-87-3	8260B	ND		1.0	0.35	ug/L	1
Dibromochloromethane	124-48-1	8260B	ND		1.0	0.33	ug/L	1
1,4-Dichlorobenzene	106-46-7	8260B	ND		1.0	0.33	ug/L	1
1,3-Dichlorobenzene	541-73-1	8260B	ND		1.0	0.33	ug/L	1
1,2-Dichlorobenzene	95-50-1	8260B	ND		1.0	0.33	ug/L	1
1,2-Dichloroethane	107-06-2	8260B	ND		1.0	0.15	ug/L	1
1,1-Dichloroethane	75-34-3	8260B	ND		1.0	0.13	ug/L	1
trans-1,2-Dichloroethene	156-60-5	8260B	ND		1.0	0.21	ug/L	1
cis-1,2-Dichloroethene	156-59-2	8260B	1.8		1.0	0.12	ug/L	1
1,1-Dichloroethene	75-35-4	8260B	ND		1.0	0.16	ug/L	1
1,2-Dichloropropane	78-87-5	8260B	ND		1.0	0.19	ug/L	1
trans-1,3-Dichloropropene	10061-02-6	8260B	ND		1.0	0.11	ug/L	1
cis-1,3-Dichloropropene	10061-01-5	8260B	ND		1.0	0.092	ug/L	1
Ethylbenzene	100-41-4	8260B	ND		1.0	0.33	ug/L	1
2-Hexanone	591-78-6	8260B	ND		10	0.27	ug/L	1
Methyl tertiary butyl ether (MTBE)	1634-04-4	8260B	ND		1.0	0.40	ug/L	1
4-Methyl-2-pentanone	108-10-1	8260B	ND		10	0.31	ug/L	1
Methylene chloride	75-09-2	8260B	ND		1.0	0.33	ug/L	1
Styrene	100-42-5	8260B	ND		1.0	0.12	ug/L	1
1,1,2,2-Tetrachloroethane	79-34-5	8260B	ND		1.0	0.16	ug/L	1
Tetrachloroethene	127-18-4	8260B	14		1.0	0.13	ug/L	1
Toluene	108-88-3	8260B	ND		1.0	0.33	ug/L	1
1,2,4-Trichlorobenzene	120-82-1	8260B	ND		1.0	0.51	ug/L	1
1,1,2-Trichloroethane	79-00-5	8260B	ND		1.0	0.21	ug/L	1
1,1,1-Trichloroethane	71-55-6	8260B	ND		1.0	0.074	ug/L	1
Trichloroethene	79-01-6	8260B	14		1.0	0.18	ug/L	1
Vinyl chloride	75-01-4	8260B	ND		1.0	0.054	ug/L	1
Xylenes (total)	1330-20-7	8260B	ND		1.0	0.33	ug/L	1

PQL = Practical quantitation limit
B = Detected in the method blank
E = Quantitation of compound exceeded the calibration range
ND = Not detected at or above the MDL
J = Estimated result < PQL and ≥ MDL
P = The RPD between two GC columns exceeds 40%
Where applicable, all soil sample analysis are reported on a dry weight basis unless flagged with a "W"
N = Recovery is out of criteria
H = Out of holding time

Volatile Organic Compounds by GC/MS

Client: ARCADIS U.S., Inc.
Laboratory ID: MA26019-004
Description: DUP02 (012511)
Matrix: Aqueous
Date Sampled: 01/25/2011
Date Received: 01/26/2011

Surrogate	Q	Run 1 % Recovery	Acceptance Limits
1,2-Dichloroethane-d4		112	70-130
Bromofluorobenzene		115	70-130
Toluene-d8		106	70-130

PQL = Practical quantitation limit
B = Detected in the method blank
E = Quantitation of compound exceeded the calibration range
ND = Not detected at or above the MDL
J = Estimated result < PQL and ≥ MDL
P = The RPD between two GC columns exceeds 40%
Where applicable, all soil sample analysis are reported on a dry weight basis unless flagged with a "W"
N = Recovery is out of criteria
H = Out of holding time

Semivolatile Organic Compounds by GC/MS

Client: ARCADIS U.S., Inc.
Laboratory ID: MA26019-004
Description: DUP02 (012511)
Matrix: Aqueous
Date Sampled: 01/25/2011
Date Received: 01/26/2011

Run	Prep Method	Analytical Method	Dilution	Analysis Date	Analyst	Prep Date	Batch
1	3520C	8270D	1	02/01/2011 2103	WD	01/28/2011 1207	51601

Parameter	CAS Number	Analytical Method	Result	Q	PQL	MDL	Units	Run
Acenaphthene	83-32-9	8270D	ND		1.0	0.090	ug/L	1
Acenaphthylene	208-96-8	8270D	ND		1.0	0.16	ug/L	1
Anthracene	120-12-7	8270D	ND		1.0	0.13	ug/L	1
Benzo(a)anthracene	56-55-3	8270D	ND		1.0	0.15	ug/L	1
Benzo(a)pyrene	50-32-8	8270D	ND		1.0	0.16	ug/L	1
Benzo(b)fluoranthene	205-99-2	8270D	ND		1.0	0.20	ug/L	1
Benzo(g,h,i)perylene	191-24-2	8270D	ND		1.0	0.23	ug/L	1
Benzo(k)fluoranthene	207-08-9	8270D	ND		1.0	0.12	ug/L	1
4-Bromophenyl phenyl ether	101-55-3	8270D	ND		1.0	0.12	ug/L	1
Butyl benzyl phthalate	85-68-7	8270D	ND		5.0	1.7	ug/L	1
Carbazole	86-74-8	8270D	ND		1.0	0.25	ug/L	1
4-Chloro-3-methyl phenol	59-50-7	8270D	ND		1.0	0.22	ug/L	1
4-Chloroaniline	106-47-8	8270D	ND		1.0	0.13	ug/L	1
bis(2-Chloroethoxy)methane	111-91-1	8270D	ND		1.0	0.13	ug/L	1
bis(2-Chloroisopropyl)ether	108-60-1	8270D	ND		1.0	0.080	ug/L	1
2-Chloronaphthalene	91-58-7	8270D	ND		1.0	0.12	ug/L	1
2-Chlorophenol	95-57-8	8270D	ND		1.0	0.13	ug/L	1
4-Chlorophenyl phenyl ether	7005-72-3	8270D	ND		1.0	0.11	ug/L	1
Chrysene	218-01-9	8270D	ND		1.0	0.12	ug/L	1
Dibenzo(a,h)anthracene	53-70-3	8270D	ND		1.0	0.13	ug/L	1
Dibenzofuran	132-64-9	8270D	ND		1.0	0.16	ug/L	1
3,3'-Dichlorobenzidine	91-94-1	8270D	ND		5.0	0.81	ug/L	1
2,4-Dichlorophenol	120-83-2	8270D	ND		1.0	0.15	ug/L	1
Diethylphthalate	84-66-2	8270D	ND		5.0	1.7	ug/L	1
Dimethyl phthalate	131-11-3	8270D	ND		5.0	1.7	ug/L	1
2,4-Dimethylphenol	105-67-9	8270D	ND		1.0	0.31	ug/L	1
Di-n-butyl phthalate	84-74-2	8270D	ND		5.0	1.7	ug/L	1
4,6-Dinitro-2-methylphenol	534-52-1	8270D	ND		5.0	1.5	ug/L	1
2,4-Dinitrophenol	51-28-5	8270D	ND		5.0	0.25	ug/L	1
2,4-Dinitrotoluene	121-14-2	8270D	ND		2.0	0.45	ug/L	1
2,6-Dinitrotoluene	606-20-2	8270D	ND		2.0	0.40	ug/L	1
Di-n-octylphthalate	117-84-0	8270D	ND		5.0	1.7	ug/L	1
bis(2-Ethylhexyl)phthalate	117-81-7	8270D	ND		5.0	1.7	ug/L	1
Fluoranthene	206-44-0	8270D	ND		1.0	0.21	ug/L	1
Fluorene	86-73-7	8270D	ND		1.0	0.10	ug/L	1
Hexachlorobenzene	118-74-1	8270D	ND		1.0	0.21	ug/L	1
Hexachlorobutadiene	87-68-3	8270D	ND		1.0	0.090	ug/L	1
Hexachlorocyclopentadiene	77-47-4	8270D	ND		5.0	0.23	ug/L	1
Hexachloroethane	67-72-1	8270D	ND		1.0	0.11	ug/L	1
Indeno(1,2,3-c,d)pyrene	193-39-5	8270D	ND		1.0	0.23	ug/L	1
Isophorone	78-59-1	8270D	ND		1.0	0.080	ug/L	1
2-Methylnaphthalene	91-57-6	8270D	ND		1.0	0.080	ug/L	1
2-Methylphenol	95-48-7	8270D	ND		1.0	0.17	ug/L	1
3 & 4-Methylphenol	106-44-5	8270D	ND		2.0	0.57	ug/L	1

PQL = Practical quantitation limit
B = Detected in the method blank
E = Quantitation of compound exceeded the calibration range
ND = Not detected at or above the MDL
J = Estimated result < PQL and ≥ MDL
P = The RPD between two GC columns exceeds 40%
Where applicable, all soil sample analysis are reported on a dry weight basis unless flagged with a "W"
N = Recovery is out of criteria
H = Out of holding time

Semivolatile Organic Compounds by GC/MS

Client: ARCADIS U.S., Inc.
Laboratory ID: MA26019-004
Description: DUP02 (012511)
Matrix: Aqueous
Date Sampled: 01/25/2011
Date Received: 01/26/2011

Run	Prep Method	Analytical Method	Dilution	Analysis Date	Analyst	Prep Date	Batch
1	3520C	8270D	1	02/01/2011 2103	WD	01/28/2011 1207	51601

Parameter	CAS Number	Analytical Method	Result	Q	PQL	MDL	Units	Run
Naphthalene	91-20-3	8270D	ND		1.0	0.070	ug/L	1
2-Nitroaniline	88-74-4	8270D	ND		2.0	0.55	ug/L	1
3-Nitroaniline	99-09-2	8270D	ND		2.0	0.77	ug/L	1
4-Nitroaniline	100-01-6	8270D	ND		2.0	0.39	ug/L	1
Nitrobenzene	98-95-3	8270D	ND		1.0	0.10	ug/L	1
2-Nitrophenol	88-75-5	8270D	ND		2.0	0.27	ug/L	1
4-Nitrophenol	100-02-7	8270D	ND		5.0	0.64	ug/L	1
N-Nitrosodi-n-propylamine	621-64-7	8270D	ND		1.0	0.080	ug/L	1
N-Nitrosodiphenylamine (Diphenylamine)	86-30-6	8270D	ND		1.0	0.38	ug/L	1
Pentachlorophenol	87-86-5	8270D	ND		5.0	0.54	ug/L	1
Phenanthrene	85-01-8	8270D	ND		1.0	0.18	ug/L	1
Phenol	108-95-2	8270D	ND		1.0	0.11	ug/L	1
Pyrene	129-00-0	8270D	ND		1.0	0.16	ug/L	1
2,4,5-Trichlorophenol	95-95-4	8270D	ND		1.0	0.18	ug/L	1
2,4,6-Trichlorophenol	88-06-2	8270D	ND		1.0	0.22	ug/L	1

Surrogate	Q	Run 1 % Recovery	Acceptance Limits
2-Fluorobiphenyl		74	37-129
2-Fluorophenol		69	24-127
Nitrobenzene-d5		73	38-127
Phenol-d5		68	28-128
Terphenyl-d14		57	10-148
2,4,6-Tribromophenol		71	41-144

PQL = Practical quantitation limit
B = Detected in the method blank
E = Quantitation of compound exceeded the calibration range
ND = Not detected at or above the MDL
J = Estimated result < PQL and ≥ MDL
P = The RPD between two GC columns exceeds 40%
Where applicable, all soil sample analysis are reported on a dry weight basis unless flagged with a "W"
N = Recovery is out of criteria
H = Out of holding time

Dissolved RCRA Metals

Client: ARCADIS U.S., Inc.
Laboratory ID: MA26019-004
Description: DUP02 (012511)
Matrix: Aqueous
Date Sampled: 01/25/2011
Date Received: 01/26/2011

Run	Prep Method	Analytical Method	Dilution	Analysis Date	Analyst	Prep Date	Batch
1		7470A	1	01/28/2011 1627	BNW	01/28/2011 1145	51589
1	3005A	6010C	1	02/01/2011 0033	CDF	01/28/2011 0915	51574

Parameter	CAS Number	Analytical Method	Result	Q	PQL	MDL	Units	Run
Dissolved Arsenic	7440-38-2	6010C	ND		0.010	0.0040	mg/L	1
Dissolved Barium	7440-39-3	6010C	0.11		0.025	0.0075	mg/L	1
Dissolved Cadmium	7440-43-9	6010C	0.00064	J	0.0020	0.00060	mg/L	1
Dissolved Chromium	7440-47-3	6010C	ND		0.0050	0.0021	mg/L	1
Dissolved Lead	7439-92-1	6010C	ND		0.010	0.0019	mg/L	1
Dissolved Mercury	7439-97-6	7470A	ND		0.00010	0.000053	mg/L	1
Dissolved Selenium	7782-49-2	6010C	ND		0.010	0.0026	mg/L	1
Dissolved Silver	7440-22-4	6010C	0.0018	J	0.0050	0.00040	mg/L	1

PQL = Practical quantitation limit
B = Detected in the method blank
E = Quantitation of compound exceeded the calibration range
ND = Not detected at or above the MDL
J = Estimated result < PQL and ≥ MDL
P = The RPD between two GC columns exceeds 40%
Where applicable, all soil sample analysis are reported on a dry weight basis unless flagged with a "W"
N = Recovery is out of criteria
H = Out of holding time

RCRA Metals

Client: ARCADIS U.S., Inc.
Laboratory ID: MA26019-004
Description: DUP02 (012511)
Matrix: Aqueous
Date Sampled: 01/25/2011
Date Received: 01/26/2011

Run	Prep Method	Analytical Method	Dilution	Analysis Date	Analyst	Prep Date	Batch
1		7470A	1	01/28/2011 1616	BNW	01/28/2011 1145	51589
1	3005A	6010C	1	02/01/2011 0420	CDF	01/27/2011 1005	51507

Parameter	CAS Number	Analytical Method	Result	Q	PQL	MDL	Units	Run
Arsenic	7440-38-2	6010C	ND		0.010	0.0040	mg/L	1
Barium	7440-39-3	6010C	0.13		0.025	0.0075	mg/L	1
Cadmium	7440-43-9	6010C	ND		0.0020	0.00060	mg/L	1
Chromium	7440-47-3	6010C	ND		0.0050	0.0021	mg/L	1
Lead	7439-92-1	6010C	ND		0.010	0.0019	mg/L	1
Mercury	7439-97-6	7470A	ND		0.00010	0.000053	mg/L	1
Selenium	7782-49-2	6010C	ND		0.010	0.0026	mg/L	1
Silver	7440-22-4	6010C	0.0056		0.0050	0.00040	mg/L	1

PQL = Practical quantitation limit
B = Detected in the method blank
E = Quantitation of compound exceeded the calibration range
ND = Not detected at or above the MDL
J = Estimated result < PQL and ≥ MDL
P = The RPD between two GC columns exceeds 40%
Where applicable, all soil sample analysis are reported on a dry weight basis unless flagged with a "W"
N = Recovery is out of criteria
H = Out of holding time

Volatile Organic Compounds by GC/MS

Client: ARCADIS U.S., Inc.
Laboratory ID: MA26019-005
Description: G4MW022
Matrix: Aqueous
Date Sampled: 01/25/2011 1115
Date Received: 01/26/2011

Run	Prep Method	Analytical Method	Dilution	Analysis Date	Analyst	Prep Date	Batch
1	5030B	8260B	1	01/29/2011 0240	DLB		52835

Parameter	CAS Number	Analytical Method	Result	Q	PQL	MDL	Units	Run
Acetone	67-64-1	8260B	ND		20	6.7	ug/L	1
Benzene	71-43-2	8260B	ND		1.0	0.13	ug/L	1
Bromodichloromethane	75-27-4	8260B	ND		1.0	0.33	ug/L	1
Bromoform	75-25-2	8260B	ND		1.0	0.66	ug/L	1
Bromomethane (Methyl bromide)	74-83-9	8260B	ND		2.0	0.80	ug/L	1
2-Butanone (MEK)	78-93-3	8260B	ND		10	2.0	ug/L	1
Carbon disulfide	75-15-0	8260B	ND		1.0	0.097	ug/L	1
Carbon tetrachloride	56-23-5	8260B	ND		1.0	0.14	ug/L	1
Chlorobenzene	108-90-7	8260B	ND		2.0	0.33	ug/L	1
Chloroethane	75-00-3	8260B	ND		2.0	0.47	ug/L	1
Chloroform	67-66-3	8260B	ND		1.0	0.33	ug/L	1
Chloromethane (Methyl chloride)	74-87-3	8260B	ND		1.0	0.35	ug/L	1
Dibromochloromethane	124-48-1	8260B	ND		1.0	0.33	ug/L	1
1,4-Dichlorobenzene	106-46-7	8260B	ND		1.0	0.33	ug/L	1
1,3-Dichlorobenzene	541-73-1	8260B	ND		1.0	0.33	ug/L	1
1,2-Dichlorobenzene	95-50-1	8260B	ND		1.0	0.33	ug/L	1
1,2-Dichloroethane	107-06-2	8260B	ND		1.0	0.15	ug/L	1
1,1-Dichloroethane	75-34-3	8260B	ND		1.0	0.13	ug/L	1
trans-1,2-Dichloroethene	156-60-5	8260B	0.54	J	1.0	0.21	ug/L	1
cis-1,2-Dichloroethene	156-59-2	8260B	1.9		1.0	0.12	ug/L	1
1,1-Dichloroethene	75-35-4	8260B	ND		1.0	0.16	ug/L	1
1,2-Dichloropropane	78-87-5	8260B	ND		1.0	0.19	ug/L	1
trans-1,3-Dichloropropene	10061-02-6	8260B	ND		1.0	0.11	ug/L	1
cis-1,3-Dichloropropene	10061-01-5	8260B	ND		1.0	0.092	ug/L	1
Ethylbenzene	100-41-4	8260B	ND		1.0	0.33	ug/L	1
2-Hexanone	591-78-6	8260B	ND		10	0.27	ug/L	1
Methyl tertiary butyl ether (MTBE)	1634-04-4	8260B	ND		1.0	0.40	ug/L	1
4-Methyl-2-pentanone	108-10-1	8260B	ND		10	0.31	ug/L	1
Methylene chloride	75-09-2	8260B	ND		1.0	0.33	ug/L	1
Styrene	100-42-5	8260B	ND		1.0	0.12	ug/L	1
1,1,2,2-Tetrachloroethane	79-34-5	8260B	ND		1.0	0.16	ug/L	1
Tetrachloroethene	127-18-4	8260B	ND		1.0	0.13	ug/L	1
Toluene	108-88-3	8260B	ND		1.0	0.33	ug/L	1
1,2,4-Trichlorobenzene	120-82-1	8260B	ND		1.0	0.51	ug/L	1
1,1,2-Trichloroethane	79-00-5	8260B	ND		1.0	0.21	ug/L	1
1,1,1-Trichloroethane	71-55-6	8260B	ND		1.0	0.074	ug/L	1
Trichloroethene	79-01-6	8260B	3.1		1.0	0.18	ug/L	1
Vinyl chloride	75-01-4	8260B	ND		1.0	0.054	ug/L	1
Xylenes (total)	1330-20-7	8260B	ND		1.0	0.33	ug/L	1

PQL = Practical quantitation limit
B = Detected in the method blank
E = Quantitation of compound exceeded the calibration range
ND = Not detected at or above the MDL
J = Estimated result < PQL and ≥ MDL
P = The RPD between two GC columns exceeds 40%
Where applicable, all soil sample analysis are reported on a dry weight basis unless flagged with a "W"
N = Recovery is out of criteria
H = Out of holding time

Volatile Organic Compounds by GC/MS

Client: ARCADIS U.S., Inc.
Laboratory ID: MA26019-005
Description: G4MW022
Matrix: Aqueous
Date Sampled: 01/25/2011 1115
Date Received: 01/26/2011

Surrogate	Q	Run 1 % Recovery	Acceptance Limits
1,2-Dichloroethane-d4		114	70-130
Bromofluorobenzene		114	70-130
Toluene-d8		106	70-130

PQL = Practical quantitation limit
B = Detected in the method blank
E = Quantitation of compound exceeded the calibration range
ND = Not detected at or above the MDL
J = Estimated result < PQL and ≥ MDL
P = The RPD between two GC columns exceeds 40%
Where applicable, all soil sample analysis are reported on a dry weight basis unless flagged with a "W"
N = Recovery is out of criteria
H = Out of holding time

Semivolatile Organic Compounds by GC/MS

Client: ARCADIS U.S., Inc.
Laboratory ID: MA26019-005
Description: G4MW022
Matrix: Aqueous
Date Sampled: 01/25/2011 1115
Date Received: 01/26/2011

Run	Prep Method	Analytical Method	Dilution	Analysis Date	Analyst	Prep Date	Batch
1	3520C	8270D	1	02/01/2011 2122	WD	01/28/2011 1207	51601

Parameter	CAS Number	Analytical Method	Result	Q	PQL	MDL	Units	Run
Acenaphthene	83-32-9	8270D	ND		1.0	0.090	ug/L	1
Acenaphthylene	208-96-8	8270D	ND		1.0	0.16	ug/L	1
Anthracene	120-12-7	8270D	ND		1.0	0.13	ug/L	1
Benzo(a)anthracene	56-55-3	8270D	ND		1.0	0.15	ug/L	1
Benzo(a)pyrene	50-32-8	8270D	ND		1.0	0.16	ug/L	1
Benzo(b)fluoranthene	205-99-2	8270D	ND		1.0	0.20	ug/L	1
Benzo(g,h,i)perylene	191-24-2	8270D	ND		1.0	0.23	ug/L	1
Benzo(k)fluoranthene	207-08-9	8270D	ND		1.0	0.12	ug/L	1
4-Bromophenyl phenyl ether	101-55-3	8270D	ND		1.0	0.12	ug/L	1
Butyl benzyl phthalate	85-68-7	8270D	ND		5.0	1.7	ug/L	1
Carbazole	86-74-8	8270D	ND		1.0	0.25	ug/L	1
4-Chloro-3-methyl phenol	59-50-7	8270D	ND		1.0	0.22	ug/L	1
4-Chloroaniline	106-47-8	8270D	ND		1.0	0.13	ug/L	1
bis(2-Chloroethoxy)methane	111-91-1	8270D	ND		1.0	0.13	ug/L	1
bis(2-Chloroisopropyl)ether	108-60-1	8270D	ND		1.0	0.080	ug/L	1
2-Chloronaphthalene	91-58-7	8270D	ND		1.0	0.12	ug/L	1
2-Chlorophenol	95-57-8	8270D	ND		1.0	0.13	ug/L	1
4-Chlorophenyl phenyl ether	7005-72-3	8270D	ND		1.0	0.11	ug/L	1
Chrysene	218-01-9	8270D	ND		1.0	0.12	ug/L	1
Dibenzo(a,h)anthracene	53-70-3	8270D	ND		1.0	0.13	ug/L	1
Dibenzofuran	132-64-9	8270D	ND		1.0	0.16	ug/L	1
3,3'-Dichlorobenzidine	91-94-1	8270D	ND		5.0	0.81	ug/L	1
2,4-Dichlorophenol	120-83-2	8270D	ND		1.0	0.15	ug/L	1
Diethylphthalate	84-66-2	8270D	ND		5.0	1.7	ug/L	1
Dimethyl phthalate	131-11-3	8270D	ND		5.0	1.7	ug/L	1
2,4-Dimethylphenol	105-67-9	8270D	ND		1.0	0.31	ug/L	1
Di-n-butyl phthalate	84-74-2	8270D	ND		5.0	1.7	ug/L	1
4,6-Dinitro-2-methylphenol	534-52-1	8270D	ND		5.0	1.5	ug/L	1
2,4-Dinitrophenol	51-28-5	8270D	ND		5.0	0.25	ug/L	1
2,4-Dinitrotoluene	121-14-2	8270D	ND		2.0	0.45	ug/L	1
2,6-Dinitrotoluene	606-20-2	8270D	ND		2.0	0.40	ug/L	1
Di-n-octylphthalate	117-84-0	8270D	ND		5.0	1.7	ug/L	1
bis(2-Ethylhexyl)phthalate	117-81-7	8270D	ND		5.0	1.7	ug/L	1
Fluoranthene	206-44-0	8270D	ND		1.0	0.21	ug/L	1
Fluorene	86-73-7	8270D	ND		1.0	0.10	ug/L	1
Hexachlorobenzene	118-74-1	8270D	ND		1.0	0.21	ug/L	1
Hexachlorobutadiene	87-68-3	8270D	ND		1.0	0.090	ug/L	1
Hexachlorocyclopentadiene	77-47-4	8270D	ND		5.0	0.23	ug/L	1
Hexachloroethane	67-72-1	8270D	ND		1.0	0.11	ug/L	1
Indeno(1,2,3-c,d)pyrene	193-39-5	8270D	ND		1.0	0.23	ug/L	1
Isophorone	78-59-1	8270D	ND		1.0	0.080	ug/L	1
2-Methylnaphthalene	91-57-6	8270D	ND		1.0	0.080	ug/L	1
2-Methylphenol	95-48-7	8270D	ND		1.0	0.17	ug/L	1
3 & 4-Methylphenol	106-44-5	8270D	ND		2.0	0.57	ug/L	1

PQL = Practical quantitation limit
B = Detected in the method blank
E = Quantitation of compound exceeded the calibration range
ND = Not detected at or above the MDL
J = Estimated result < PQL and ≥ MDL
P = The RPD between two GC columns exceeds 40%
Where applicable, all soil sample analysis are reported on a dry weight basis unless flagged with a "W"
N = Recovery is out of criteria
H = Out of holding time

Semivolatile Organic Compounds by GC/MS

Client: ARCADIS U.S., Inc.
Laboratory ID: MA26019-005
Description: G4MW022
Matrix: Aqueous
Date Sampled: 01/25/2011 1115
Date Received: 01/26/2011

Run	Prep Method	Analytical Method	Dilution	Analysis Date	Analyst	Prep Date	Batch
1	3520C	8270D	1	02/01/2011 2122	WD	01/28/2011 1207	51601

Parameter	CAS Number	Analytical Method	Result	Q	PQL	MDL	Units	Run
Naphthalene	91-20-3	8270D	ND		1.0	0.070	ug/L	1
2-Nitroaniline	88-74-4	8270D	ND		2.0	0.55	ug/L	1
3-Nitroaniline	99-09-2	8270D	ND		2.0	0.77	ug/L	1
4-Nitroaniline	100-01-6	8270D	ND		2.0	0.39	ug/L	1
Nitrobenzene	98-95-3	8270D	ND		1.0	0.10	ug/L	1
2-Nitrophenol	88-75-5	8270D	ND		2.0	0.27	ug/L	1
4-Nitrophenol	100-02-7	8270D	ND		5.0	0.64	ug/L	1
N-Nitrosodi-n-propylamine	621-64-7	8270D	ND		1.0	0.080	ug/L	1
N-Nitrosodiphenylamine (Diphenylamine)	86-30-6	8270D	ND		1.0	0.38	ug/L	1
Pentachlorophenol	87-86-5	8270D	ND		5.0	0.54	ug/L	1
Phenanthrene	85-01-8	8270D	ND		1.0	0.18	ug/L	1
Phenol	108-95-2	8270D	ND		1.0	0.11	ug/L	1
Pyrene	129-00-0	8270D	ND		1.0	0.16	ug/L	1
2,4,5-Trichlorophenol	95-95-4	8270D	ND		1.0	0.18	ug/L	1
2,4,6-Trichlorophenol	88-06-2	8270D	ND		1.0	0.22	ug/L	1

Surrogate	Q	Run 1 % Recovery	Acceptance Limits
2-Fluorobiphenyl		74	37-129
2-Fluorophenol		72	24-127
Nitrobenzene-d5		80	38-127
Phenol-d5		69	28-128
Terphenyl-d14		28	10-148
2,4,6-Tribromophenol		74	41-144

PQL = Practical quantitation limit
B = Detected in the method blank
E = Quantitation of compound exceeded the calibration range
ND = Not detected at or above the MDL
J = Estimated result < PQL and ≥ MDL
P = The RPD between two GC columns exceeds 40%
Where applicable, all soil sample analysis are reported on a dry weight basis unless flagged with a "W"
N = Recovery is out of criteria
H = Out of holding time

Dissolved RCRA Metals

Client: ARCADIS U.S., Inc.
Laboratory ID: MA26019-005
Description: G4MW022
Matrix: Aqueous
Date Sampled: 01/25/2011 1115
Date Received: 01/26/2011

Run	Prep Method	Analytical Method	Dilution	Analysis Date	Analyst	Prep Date	Batch
1		7470A	1	01/28/2011 1639	BNW	01/28/2011 1145	51589
1	3005A	6010C	1	02/01/2011 0040	CDF	01/28/2011 0915	51574

Parameter	CAS Number	Analytical Method	Result	Q	PQL	MDL	Units	Run
Dissolved Arsenic	7440-38-2	6010C	ND		0.010	0.0040	mg/L	1
Dissolved Barium	7440-39-3	6010C	0.27		0.025	0.0075	mg/L	1
Dissolved Cadmium	7440-43-9	6010C	ND		0.0020	0.00060	mg/L	1
Dissolved Chromium	7440-47-3	6010C	0.0023	J	0.0050	0.0021	mg/L	1
Dissolved Lead	7439-92-1	6010C	ND		0.010	0.0019	mg/L	1
Dissolved Mercury	7439-97-6	7470A	ND		0.00010	0.000053	mg/L	1
Dissolved Selenium	7782-49-2	6010C	ND		0.010	0.0026	mg/L	1
Dissolved Silver	7440-22-4	6010C	0.0013	J	0.0050	0.00040	mg/L	1

PQL = Practical quantitation limit
B = Detected in the method blank
E = Quantitation of compound exceeded the calibration range
ND = Not detected at or above the MDL
J = Estimated result < PQL and ≥ MDL
P = The RPD between two GC columns exceeds 40%
Where applicable, all soil sample analysis are reported on a dry weight basis unless flagged with a "W"
N = Recovery is out of criteria
H = Out of holding time

RCRA Metals

Client: ARCADIS U.S., Inc.
Laboratory ID: MA26019-005
Description: G4MW022
Matrix: Aqueous
Date Sampled: 01/25/2011 1115
Date Received: 01/26/2011

Run	Prep Method	Analytical Method	Dilution	Analysis Date	Analyst	Prep Date	Batch
1		7470A	1	01/28/2011 1629	BNW	01/28/2011 1145	51589
1	3005A	6010C	1	02/01/2011 0424	CDF	01/27/2011 1005	51507

Parameter	CAS Number	Analytical Method	Result	Q	PQL	MDL	Units	Run
Arsenic	7440-38-2	6010C	ND		0.010	0.0040	mg/L	1
Barium	7440-39-3	6010C	0.30		0.025	0.0075	mg/L	1
Cadmium	7440-43-9	6010C	ND		0.0020	0.00060	mg/L	1
Chromium	7440-47-3	6010C	0.0029	J	0.0050	0.0021	mg/L	1
Lead	7439-92-1	6010C	ND		0.010	0.0019	mg/L	1
Mercury	7439-97-6	7470A	0.000062	J	0.00010	0.000053	mg/L	1
Selenium	7782-49-2	6010C	ND		0.010	0.0026	mg/L	1
Silver	7440-22-4	6010C	0.0035	J	0.0050	0.00040	mg/L	1

PQL = Practical quantitation limit
B = Detected in the method blank
E = Quantitation of compound exceeded the calibration range
ND = Not detected at or above the MDL
J = Estimated result < PQL and ≥ MDL
P = The RPD between two GC columns exceeds 40%
Where applicable, all soil sample analysis are reported on a dry weight basis unless flagged with a "W"
N = Recovery is out of criteria
H = Out of holding time

Volatile Organic Compounds by GC/MS

Client: ARCADIS U.S., Inc.
Laboratory ID: MA26019-006
Description: G4MW026
Matrix: Aqueous
Date Sampled: 01/25/2011 1305
Date Received: 01/26/2011

Run	Prep Method	Analytical Method	Dilution	Analysis Date	Analyst	Prep Date	Batch
1	5030B	8260B	1	01/29/2011 0302	DLB		52835

Parameter	CAS Number	Analytical Method	Result	Q	PQL	MDL	Units	Run
Acetone	67-64-1	8260B	ND		20	6.7	ug/L	1
Benzene	71-43-2	8260B	ND		1.0	0.13	ug/L	1
Bromodichloromethane	75-27-4	8260B	ND		1.0	0.33	ug/L	1
Bromoform	75-25-2	8260B	ND		1.0	0.66	ug/L	1
Bromomethane (Methyl bromide)	74-83-9	8260B	ND		2.0	0.80	ug/L	1
2-Butanone (MEK)	78-93-3	8260B	ND		10	2.0	ug/L	1
Carbon disulfide	75-15-0	8260B	ND		1.0	0.097	ug/L	1
Carbon tetrachloride	56-23-5	8260B	ND		1.0	0.14	ug/L	1
Chlorobenzene	108-90-7	8260B	ND		2.0	0.33	ug/L	1
Chloroethane	75-00-3	8260B	ND		2.0	0.47	ug/L	1
Chloroform	67-66-3	8260B	ND		1.0	0.33	ug/L	1
Chloromethane (Methyl chloride)	74-87-3	8260B	ND		1.0	0.35	ug/L	1
Dibromochloromethane	124-48-1	8260B	ND		1.0	0.33	ug/L	1
1,4-Dichlorobenzene	106-46-7	8260B	ND		1.0	0.33	ug/L	1
1,3-Dichlorobenzene	541-73-1	8260B	ND		1.0	0.33	ug/L	1
1,2-Dichlorobenzene	95-50-1	8260B	ND		1.0	0.33	ug/L	1
1,2-Dichloroethane	107-06-2	8260B	ND		1.0	0.15	ug/L	1
1,1-Dichloroethane	75-34-3	8260B	ND		1.0	0.13	ug/L	1
trans-1,2-Dichloroethene	156-60-5	8260B	ND		1.0	0.21	ug/L	1
cis-1,2-Dichloroethene	156-59-2	8260B	ND		1.0	0.12	ug/L	1
1,1-Dichloroethene	75-35-4	8260B	ND		1.0	0.16	ug/L	1
1,2-Dichloropropane	78-87-5	8260B	ND		1.0	0.19	ug/L	1
trans-1,3-Dichloropropene	10061-02-6	8260B	ND		1.0	0.11	ug/L	1
cis-1,3-Dichloropropene	10061-01-5	8260B	ND		1.0	0.092	ug/L	1
Ethylbenzene	100-41-4	8260B	ND		1.0	0.33	ug/L	1
2-Hexanone	591-78-6	8260B	ND		10	0.27	ug/L	1
Methyl tertiary butyl ether (MTBE)	1634-04-4	8260B	ND		1.0	0.40	ug/L	1
4-Methyl-2-pentanone	108-10-1	8260B	ND		10	0.31	ug/L	1
Methylene chloride	75-09-2	8260B	ND		1.0	0.33	ug/L	1
Styrene	100-42-5	8260B	ND		1.0	0.12	ug/L	1
1,1,2,2-Tetrachloroethane	79-34-5	8260B	ND		1.0	0.16	ug/L	1
Tetrachloroethene	127-18-4	8260B	ND		1.0	0.13	ug/L	1
Toluene	108-88-3	8260B	ND		1.0	0.33	ug/L	1
1,2,4-Trichlorobenzene	120-82-1	8260B	ND		1.0	0.51	ug/L	1
1,1,2-Trichloroethane	79-00-5	8260B	ND		1.0	0.21	ug/L	1
1,1,1-Trichloroethane	71-55-6	8260B	ND		1.0	0.074	ug/L	1
Trichloroethene	79-01-6	8260B	ND		1.0	0.18	ug/L	1
Vinyl chloride	75-01-4	8260B	ND		1.0	0.054	ug/L	1
Xylenes (total)	1330-20-7	8260B	ND		1.0	0.33	ug/L	1

PQL = Practical quantitation limit
B = Detected in the method blank
E = Quantitation of compound exceeded the calibration range
ND = Not detected at or above the MDL
J = Estimated result < PQL and ≥ MDL
P = The RPD between two GC columns exceeds 40%
Where applicable, all soil sample analysis are reported on a dry weight basis unless flagged with a "W"
N = Recovery is out of criteria
H = Out of holding time

Volatile Organic Compounds by GC/MS

Client: ARCADIS U.S., Inc.
Laboratory ID: MA26019-006
Description: G4MW026
Matrix: Aqueous
Date Sampled: 01/25/2011 1305
Date Received: 01/26/2011

Surrogate	Q	Run 1 % Recovery	Acceptance Limits
1,2-Dichloroethane-d4		113	70-130
Bromofluorobenzene		114	70-130
Toluene-d8		106	70-130

PQL = Practical quantitation limit
B = Detected in the method blank
E = Quantitation of compound exceeded the calibration range
ND = Not detected at or above the MDL
J = Estimated result < PQL and ≥ MDL
P = The RPD between two GC columns exceeds 40%
Where applicable, all soil sample analysis are reported on a dry weight basis unless flagged with a "W"
N = Recovery is out of criteria
H = Out of holding time

Semivolatile Organic Compounds by GC/MS

Client: ARCADIS U.S., Inc.
Laboratory ID: MA26019-006
Description: G4MW026
Matrix: Aqueous
Date Sampled: 01/25/2011 1305
Date Received: 01/26/2011

Run	Prep Method	Analytical Method	Dilution	Analysis Date	Analyst	Prep Date	Batch
1	3520C	8270D	1	02/01/2011 2141	WD	01/28/2011 1207	51601

Parameter	CAS Number	Analytical Method	Result	Q	PQL	MDL	Units	Run
Acenaphthene	83-32-9	8270D	ND		1.0	0.090	ug/L	1
Acenaphthylene	208-96-8	8270D	ND		1.0	0.16	ug/L	1
Anthracene	120-12-7	8270D	ND		1.0	0.13	ug/L	1
Benzo(a)anthracene	56-55-3	8270D	ND		1.0	0.15	ug/L	1
Benzo(a)pyrene	50-32-8	8270D	ND		1.0	0.16	ug/L	1
Benzo(b)fluoranthene	205-99-2	8270D	ND		1.0	0.20	ug/L	1
Benzo(g,h,i)perylene	191-24-2	8270D	ND		1.0	0.23	ug/L	1
Benzo(k)fluoranthene	207-08-9	8270D	ND		1.0	0.12	ug/L	1
4-Bromophenyl phenyl ether	101-55-3	8270D	ND		1.0	0.12	ug/L	1
Butyl benzyl phthalate	85-68-7	8270D	ND		5.0	1.7	ug/L	1
Carbazole	86-74-8	8270D	ND		1.0	0.25	ug/L	1
4-Chloro-3-methyl phenol	59-50-7	8270D	ND		1.0	0.22	ug/L	1
4-Chloroaniline	106-47-8	8270D	ND		1.0	0.13	ug/L	1
bis(2-Chloroethoxy)methane	111-91-1	8270D	ND		1.0	0.13	ug/L	1
bis(2-Chloroisopropyl)ether	108-60-1	8270D	ND		1.0	0.080	ug/L	1
2-Chloronaphthalene	91-58-7	8270D	ND		1.0	0.12	ug/L	1
2-Chlorophenol	95-57-8	8270D	ND		1.0	0.13	ug/L	1
4-Chlorophenyl phenyl ether	7005-72-3	8270D	ND		1.0	0.11	ug/L	1
Chrysene	218-01-9	8270D	ND		1.0	0.12	ug/L	1
Dibenzo(a,h)anthracene	53-70-3	8270D	ND		1.0	0.13	ug/L	1
Dibenzofuran	132-64-9	8270D	ND		1.0	0.16	ug/L	1
3,3'-Dichlorobenzidine	91-94-1	8270D	ND		5.0	0.81	ug/L	1
2,4-Dichlorophenol	120-83-2	8270D	ND		1.0	0.15	ug/L	1
Diethylphthalate	84-66-2	8270D	ND		5.0	1.7	ug/L	1
Dimethyl phthalate	131-11-3	8270D	ND		5.0	1.7	ug/L	1
2,4-Dimethylphenol	105-67-9	8270D	ND		1.0	0.31	ug/L	1
Di-n-butyl phthalate	84-74-2	8270D	ND		5.0	1.7	ug/L	1
4,6-Dinitro-2-methylphenol	534-52-1	8270D	ND		5.0	1.5	ug/L	1
2,4-Dinitrophenol	51-28-5	8270D	ND		5.0	0.25	ug/L	1
2,4-Dinitrotoluene	121-14-2	8270D	ND		2.0	0.45	ug/L	1
2,6-Dinitrotoluene	606-20-2	8270D	ND		2.0	0.40	ug/L	1
Di-n-octylphthalate	117-84-0	8270D	ND		5.0	1.7	ug/L	1
bis(2-Ethylhexyl)phthalate	117-81-7	8270D	ND		5.0	1.7	ug/L	1
Fluoranthene	206-44-0	8270D	ND		1.0	0.21	ug/L	1
Fluorene	86-73-7	8270D	ND		1.0	0.10	ug/L	1
Hexachlorobenzene	118-74-1	8270D	ND		1.0	0.21	ug/L	1
Hexachlorobutadiene	87-68-3	8270D	ND		1.0	0.090	ug/L	1
Hexachlorocyclopentadiene	77-47-4	8270D	ND		5.0	0.23	ug/L	1
Hexachloroethane	67-72-1	8270D	ND		1.0	0.11	ug/L	1
Indeno(1,2,3-c,d)pyrene	193-39-5	8270D	ND		1.0	0.23	ug/L	1
Isophorone	78-59-1	8270D	ND		1.0	0.080	ug/L	1
2-Methylnaphthalene	91-57-6	8270D	ND		1.0	0.080	ug/L	1
2-Methylphenol	95-48-7	8270D	ND		1.0	0.17	ug/L	1
3 & 4-Methylphenol	106-44-5	8270D	ND		2.0	0.57	ug/L	1

PQL = Practical quantitation limit
B = Detected in the method blank
E = Quantitation of compound exceeded the calibration range
ND = Not detected at or above the MDL
J = Estimated result < PQL and ≥ MDL
P = The RPD between two GC columns exceeds 40%
Where applicable, all soil sample analysis are reported on a dry weight basis unless flagged with a "W"
N = Recovery is out of criteria
H = Out of holding time

Semivolatile Organic Compounds by GC/MS

Client: ARCADIS U.S., Inc.
Laboratory ID: MA26019-006
Description: G4MW026
Matrix: Aqueous
Date Sampled: 01/25/2011 1305
Date Received: 01/26/2011

Run	Prep Method	Analytical Method	Dilution	Analysis Date	Analyst	Prep Date	Batch
1	3520C	8270D	1	02/01/2011 2141	WD	01/28/2011 1207	51601

Parameter	CAS Number	Analytical Method	Result	Q	PQL	MDL	Units	Run
Naphthalene	91-20-3	8270D	ND		1.0	0.070	ug/L	1
2-Nitroaniline	88-74-4	8270D	ND		2.0	0.55	ug/L	1
3-Nitroaniline	99-09-2	8270D	ND		2.0	0.77	ug/L	1
4-Nitroaniline	100-01-6	8270D	ND		2.0	0.39	ug/L	1
Nitrobenzene	98-95-3	8270D	ND		1.0	0.10	ug/L	1
2-Nitrophenol	88-75-5	8270D	ND		2.0	0.27	ug/L	1
4-Nitrophenol	100-02-7	8270D	ND		5.0	0.64	ug/L	1
N-Nitrosodi-n-propylamine	621-64-7	8270D	ND		1.0	0.080	ug/L	1
N-Nitrosodiphenylamine (Diphenylamine)	86-30-6	8270D	ND		1.0	0.38	ug/L	1
Pentachlorophenol	87-86-5	8270D	ND		5.0	0.54	ug/L	1
Phenanthrene	85-01-8	8270D	ND		1.0	0.18	ug/L	1
Phenol	108-95-2	8270D	ND		1.0	0.11	ug/L	1
Pyrene	129-00-0	8270D	ND		1.0	0.16	ug/L	1
2,4,5-Trichlorophenol	95-95-4	8270D	ND		1.0	0.18	ug/L	1
2,4,6-Trichlorophenol	88-06-2	8270D	ND		1.0	0.22	ug/L	1

Surrogate	Q	Run 1 % Recovery	Acceptance Limits
2-Fluorobiphenyl		71	37-129
2-Fluorophenol		72	24-127
Nitrobenzene-d5		77	38-127
Phenol-d5		67	28-128
Terphenyl-d14		62	10-148
2,4,6-Tribromophenol		75	41-144

PQL = Practical quantitation limit
B = Detected in the method blank
E = Quantitation of compound exceeded the calibration range
ND = Not detected at or above the MDL
J = Estimated result < PQL and ≥ MDL
P = The RPD between two GC columns exceeds 40%
Where applicable, all soil sample analysis are reported on a dry weight basis unless flagged with a "W"
N = Recovery is out of criteria
H = Out of holding time

Dissolved RCRA Metals

Client: ARCADIS U.S., Inc.
Laboratory ID: MA26019-006
Description: G4MW026
Matrix: Aqueous
Date Sampled: 01/25/2011 1305
Date Received: 01/26/2011

Run	Prep Method	Analytical Method	Dilution	Analysis Date	Analyst	Prep Date	Batch
1		7470A	1	01/28/2011 1644	BNW	01/28/2011 1145	51589
1	3005A	6010C	1	02/01/2011 0046	CDF	01/28/2011 0915	51574

Parameter	CAS Number	Analytical Method	Result	Q	PQL	MDL	Units	Run
Dissolved Arsenic	7440-38-2	6010C	ND		0.010	0.0040	mg/L	1
Dissolved Barium	7440-39-3	6010C	0.023	J	0.025	0.0075	mg/L	1
Dissolved Cadmium	7440-43-9	6010C	ND		0.0020	0.00060	mg/L	1
Dissolved Chromium	7440-47-3	6010C	ND		0.0050	0.0021	mg/L	1
Dissolved Lead	7439-92-1	6010C	ND		0.010	0.0019	mg/L	1
Dissolved Mercury	7439-97-6	7470A	ND		0.00010	0.000053	mg/L	1
Dissolved Selenium	7782-49-2	6010C	ND		0.010	0.0026	mg/L	1
Dissolved Silver	7440-22-4	6010C	0.00057	J	0.0050	0.00040	mg/L	1

PQL = Practical quantitation limit
B = Detected in the method blank
E = Quantitation of compound exceeded the calibration range
ND = Not detected at or above the MDL
J = Estimated result < PQL and ≥ MDL
P = The RPD between two GC columns exceeds 40%
Where applicable, all soil sample analysis are reported on a dry weight basis unless flagged with a "W"
N = Recovery is out of criteria
H = Out of holding time

RCRA Metals

Client: ARCADIS U.S., Inc.
Laboratory ID: MA26019-006
Description: G4MW026
Matrix: Aqueous
Date Sampled: 01/25/2011 1305
Date Received: 01/26/2011

Run	Prep Method	Analytical Method	Dilution	Analysis Date	Analyst	Prep Date	Batch
1		7470A	1	01/28/2011 1641	BNW	01/28/2011 1145	51589
1	3005A	6010C	1	02/01/2011 0428	CDF	01/27/2011 1005	51507

Parameter	CAS Number	Analytical Method	Result	Q	PQL	MDL	Units	Run
Arsenic	7440-38-2	6010C	ND		0.010	0.0040	mg/L	1
Barium	7440-39-3	6010C	0.027		0.025	0.0075	mg/L	1
Cadmium	7440-43-9	6010C	ND		0.0020	0.00060	mg/L	1
Chromium	7440-47-3	6010C	ND		0.0050	0.0021	mg/L	1
Lead	7439-92-1	6010C	ND		0.010	0.0019	mg/L	1
Mercury	7439-97-6	7470A	ND		0.00010	0.000053	mg/L	1
Selenium	7782-49-2	6010C	ND		0.010	0.0026	mg/L	1
Silver	7440-22-4	6010C	ND		0.0050	0.00040	mg/L	1

PQL = Practical quantitation limit
B = Detected in the method blank
E = Quantitation of compound exceeded the calibration range
ND = Not detected at or above the MDL
J = Estimated result < PQL and ≥ MDL
P = The RPD between two GC columns exceeds 40%
Where applicable, all soil sample analysis are reported on a dry weight basis unless flagged with a "W"
N = Recovery is out of criteria
H = Out of holding time

Volatile Organic Compounds by GC/MS

Client: ARCADIS U.S., Inc.
Laboratory ID: MA26019-007
Description: G4MW028
Matrix: Aqueous
Date Sampled: 01/25/2011 1410
Date Received: 01/26/2011

Run	Prep Method	Analytical Method	Dilution	Analysis Date	Analyst	Prep Date	Batch
1	5030B	8260B	1	01/29/2011 0323	DLB		52835

Parameter	CAS Number	Analytical Method	Result	Q	PQL	MDL	Units	Run
Acetone	67-64-1	8260B	ND		20	6.7	ug/L	1
Benzene	71-43-2	8260B	ND		1.0	0.13	ug/L	1
Bromodichloromethane	75-27-4	8260B	ND		1.0	0.33	ug/L	1
Bromoform	75-25-2	8260B	ND		1.0	0.66	ug/L	1
Bromomethane (Methyl bromide)	74-83-9	8260B	ND		2.0	0.80	ug/L	1
2-Butanone (MEK)	78-93-3	8260B	ND		10	2.0	ug/L	1
Carbon disulfide	75-15-0	8260B	ND		1.0	0.097	ug/L	1
Carbon tetrachloride	56-23-5	8260B	ND		1.0	0.14	ug/L	1
Chlorobenzene	108-90-7	8260B	ND		2.0	0.33	ug/L	1
Chloroethane	75-00-3	8260B	ND		2.0	0.47	ug/L	1
Chloroform	67-66-3	8260B	ND		1.0	0.33	ug/L	1
Chloromethane (Methyl chloride)	74-87-3	8260B	ND		1.0	0.35	ug/L	1
Dibromochloromethane	124-48-1	8260B	ND		1.0	0.33	ug/L	1
1,4-Dichlorobenzene	106-46-7	8260B	ND		1.0	0.33	ug/L	1
1,3-Dichlorobenzene	541-73-1	8260B	ND		1.0	0.33	ug/L	1
1,2-Dichlorobenzene	95-50-1	8260B	ND		1.0	0.33	ug/L	1
1,2-Dichloroethane	107-06-2	8260B	ND		1.0	0.15	ug/L	1
1,1-Dichloroethane	75-34-3	8260B	ND		1.0	0.13	ug/L	1
trans-1,2-Dichloroethene	156-60-5	8260B	ND		1.0	0.21	ug/L	1
cis-1,2-Dichloroethene	156-59-2	8260B	ND		1.0	0.12	ug/L	1
1,1-Dichloroethene	75-35-4	8260B	ND		1.0	0.16	ug/L	1
1,2-Dichloropropane	78-87-5	8260B	ND		1.0	0.19	ug/L	1
trans-1,3-Dichloropropene	10061-02-6	8260B	ND		1.0	0.11	ug/L	1
cis-1,3-Dichloropropene	10061-01-5	8260B	ND		1.0	0.092	ug/L	1
Ethylbenzene	100-41-4	8260B	ND		1.0	0.33	ug/L	1
2-Hexanone	591-78-6	8260B	ND		10	0.27	ug/L	1
Methyl tertiary butyl ether (MTBE)	1634-04-4	8260B	ND		1.0	0.40	ug/L	1
4-Methyl-2-pentanone	108-10-1	8260B	ND		10	0.31	ug/L	1
Methylene chloride	75-09-2	8260B	ND		1.0	0.33	ug/L	1
Styrene	100-42-5	8260B	ND		1.0	0.12	ug/L	1
1,1,2,2-Tetrachloroethane	79-34-5	8260B	ND		1.0	0.16	ug/L	1
Tetrachloroethene	127-18-4	8260B	ND		1.0	0.13	ug/L	1
Toluene	108-88-3	8260B	ND		1.0	0.33	ug/L	1
1,2,4-Trichlorobenzene	120-82-1	8260B	ND		1.0	0.51	ug/L	1
1,1,2-Trichloroethane	79-00-5	8260B	ND		1.0	0.21	ug/L	1
1,1,1-Trichloroethane	71-55-6	8260B	ND		1.0	0.074	ug/L	1
Trichloroethene	79-01-6	8260B	ND		1.0	0.18	ug/L	1
Vinyl chloride	75-01-4	8260B	ND		1.0	0.054	ug/L	1
Xylenes (total)	1330-20-7	8260B	ND		1.0	0.33	ug/L	1

PQL = Practical quantitation limit
B = Detected in the method blank
E = Quantitation of compound exceeded the calibration range
ND = Not detected at or above the MDL
J = Estimated result < PQL and ≥ MDL
P = The RPD between two GC columns exceeds 40%
Where applicable, all soil sample analysis are reported on a dry weight basis unless flagged with a "W"
N = Recovery is out of criteria
H = Out of holding time

Volatile Organic Compounds by GC/MS

Client: ARCADIS U.S., Inc.
Laboratory ID: MA26019-007
Description: G4MW028
Matrix: Aqueous
Date Sampled: 01/25/2011 1410
Date Received: 01/26/2011

Surrogate	Q	Run 1 % Recovery	Acceptance Limits
1,2-Dichloroethane-d4		116	70-130
Bromofluorobenzene		115	70-130
Toluene-d8		108	70-130

PQL = Practical quantitation limit
B = Detected in the method blank
E = Quantitation of compound exceeded the calibration range
ND = Not detected at or above the MDL
J = Estimated result < PQL and ≥ MDL
P = The RPD between two GC columns exceeds 40%
Where applicable, all soil sample analysis are reported on a dry weight basis unless flagged with a "W"
N = Recovery is out of criteria
H = Out of holding time

Semivolatile Organic Compounds by GC/MS

Client: ARCADIS U.S., Inc.
Laboratory ID: MA26019-007
Description: G4MW028
Matrix: Aqueous
Date Sampled: 01/25/2011 1410
Date Received: 01/26/2011

Run	Prep Method	Analytical Method	Dilution	Analysis Date	Analyst	Prep Date	Batch
1	3520C	8270D	1	02/03/2011 1733	WD	01/28/2011 1207	51601

Parameter	CAS Number	Analytical Method	Result	Q	PQL	MDL	Units	Run
Acenaphthene	83-32-9	8270D	ND		1.0	0.090	ug/L	1
Acenaphthylene	208-96-8	8270D	ND		1.0	0.16	ug/L	1
Anthracene	120-12-7	8270D	ND		1.0	0.13	ug/L	1
Benzo(a)anthracene	56-55-3	8270D	ND		1.0	0.15	ug/L	1
Benzo(a)pyrene	50-32-8	8270D	ND		1.0	0.16	ug/L	1
Benzo(b)fluoranthene	205-99-2	8270D	ND		1.0	0.20	ug/L	1
Benzo(g,h,i)perylene	191-24-2	8270D	ND		1.0	0.23	ug/L	1
Benzo(k)fluoranthene	207-08-9	8270D	ND		1.0	0.12	ug/L	1
4-Bromophenyl phenyl ether	101-55-3	8270D	ND		1.0	0.12	ug/L	1
Butyl benzyl phthalate	85-68-7	8270D	ND		5.0	1.7	ug/L	1
Carbazole	86-74-8	8270D	ND		1.0	0.25	ug/L	1
4-Chloro-3-methyl phenol	59-50-7	8270D	ND		1.0	0.22	ug/L	1
4-Chloroaniline	106-47-8	8270D	ND		1.0	0.13	ug/L	1
bis(2-Chloroethoxy)methane	111-91-1	8270D	ND		1.0	0.13	ug/L	1
bis(2-Chloroisopropyl)ether	108-60-1	8270D	ND		1.0	0.080	ug/L	1
2-Chloronaphthalene	91-58-7	8270D	ND		1.0	0.12	ug/L	1
2-Chlorophenol	95-57-8	8270D	ND		1.0	0.13	ug/L	1
4-Chlorophenyl phenyl ether	7005-72-3	8270D	ND		1.0	0.11	ug/L	1
Chrysene	218-01-9	8270D	ND		1.0	0.12	ug/L	1
Dibenzo(a,h)anthracene	53-70-3	8270D	ND		1.0	0.13	ug/L	1
Dibenzofuran	132-64-9	8270D	ND		1.0	0.16	ug/L	1
3,3'-Dichlorobenzidine	91-94-1	8270D	ND		5.0	0.81	ug/L	1
2,4-Dichlorophenol	120-83-2	8270D	ND		1.0	0.15	ug/L	1
Diethylphthalate	84-66-2	8270D	ND		5.0	1.7	ug/L	1
Dimethyl phthalate	131-11-3	8270D	ND		5.0	1.7	ug/L	1
2,4-Dimethylphenol	105-67-9	8270D	ND		1.0	0.31	ug/L	1
Di-n-butyl phthalate	84-74-2	8270D	ND		5.0	1.7	ug/L	1
4,6-Dinitro-2-methylphenol	534-52-1	8270D	ND		5.0	1.5	ug/L	1
2,4-Dinitrophenol	51-28-5	8270D	ND		5.0	0.25	ug/L	1
2,4-Dinitrotoluene	121-14-2	8270D	ND		2.0	0.45	ug/L	1
2,6-Dinitrotoluene	606-20-2	8270D	ND		2.0	0.40	ug/L	1
Di-n-octylphthalate	117-84-0	8270D	ND		5.0	1.7	ug/L	1
bis(2-Ethylhexyl)phthalate	117-81-7	8270D	ND		5.0	1.7	ug/L	1
Fluoranthene	206-44-0	8270D	ND		1.0	0.21	ug/L	1
Fluorene	86-73-7	8270D	ND		1.0	0.10	ug/L	1
Hexachlorobenzene	118-74-1	8270D	ND		1.0	0.21	ug/L	1
Hexachlorobutadiene	87-68-3	8270D	ND		1.0	0.090	ug/L	1
Hexachlorocyclopentadiene	77-47-4	8270D	ND		5.0	0.23	ug/L	1
Hexachloroethane	67-72-1	8270D	ND		1.0	0.11	ug/L	1
Indeno(1,2,3-c,d)pyrene	193-39-5	8270D	ND		1.0	0.23	ug/L	1
Isophorone	78-59-1	8270D	ND		1.0	0.080	ug/L	1
2-Methylnaphthalene	91-57-6	8270D	ND		1.0	0.080	ug/L	1
2-Methylphenol	95-48-7	8270D	ND		1.0	0.17	ug/L	1
3 & 4-Methylphenol	106-44-5	8270D	ND		2.0	0.57	ug/L	1

PQL = Practical quantitation limit
B = Detected in the method blank
E = Quantitation of compound exceeded the calibration range
ND = Not detected at or above the MDL
J = Estimated result < PQL and ≥ MDL
P = The RPD between two GC columns exceeds 40%
Where applicable, all soil sample analysis are reported on a dry weight basis unless flagged with a "W"
N = Recovery is out of criteria
H = Out of holding time

Semivolatile Organic Compounds by GC/MS

Client: ARCADIS U.S., Inc.
Laboratory ID: MA26019-007
Description: G4MW028
Matrix: Aqueous
Date Sampled: 01/25/2011 1410
Date Received: 01/26/2011

Run	Prep Method	Analytical Method	Dilution	Analysis Date	Analyst	Prep Date	Batch
1	3520C	8270D	1	02/03/2011 1733	WD	01/28/2011 1207	51601

Parameter	CAS Number	Analytical Method	Result	Q	PQL	MDL	Units	Run
Naphthalene	91-20-3	8270D	ND		1.0	0.070	ug/L	1
2-Nitroaniline	88-74-4	8270D	ND		2.0	0.55	ug/L	1
3-Nitroaniline	99-09-2	8270D	ND		2.0	0.77	ug/L	1
4-Nitroaniline	100-01-6	8270D	ND		2.0	0.39	ug/L	1
Nitrobenzene	98-95-3	8270D	ND		1.0	0.10	ug/L	1
2-Nitrophenol	88-75-5	8270D	ND		2.0	0.27	ug/L	1
4-Nitrophenol	100-02-7	8270D	ND		5.0	0.64	ug/L	1
N-Nitrosodi-n-propylamine	621-64-7	8270D	ND		1.0	0.080	ug/L	1
N-Nitrosodiphenylamine (Diphenylamine)	86-30-6	8270D	ND		1.0	0.38	ug/L	1
Pentachlorophenol	87-86-5	8270D	ND		5.0	0.54	ug/L	1
Phenanthrene	85-01-8	8270D	ND		1.0	0.18	ug/L	1
Phenol	108-95-2	8270D	ND		1.0	0.11	ug/L	1
Pyrene	129-00-0	8270D	ND		1.0	0.16	ug/L	1
2,4,5-Trichlorophenol	95-95-4	8270D	ND		1.0	0.18	ug/L	1
2,4,6-Trichlorophenol	88-06-2	8270D	ND		1.0	0.22	ug/L	1

Surrogate	Q	Run 1 % Recovery	Acceptance Limits
2-Fluorobiphenyl		63	37-129
2-Fluorophenol		43	24-127
Nitrobenzene-d5		59	38-127
Phenol-d5		45	28-128
Terphenyl-d14		10	10-148
2,4,6-Tribromophenol		63	41-144

PQL = Practical quantitation limit
B = Detected in the method blank
E = Quantitation of compound exceeded the calibration range
ND = Not detected at or above the MDL
J = Estimated result < PQL and ≥ MDL
P = The RPD between two GC columns exceeds 40%
Where applicable, all soil sample analysis are reported on a dry weight basis unless flagged with a "W"
N = Recovery is out of criteria
H = Out of holding time

Dissolved RCRA Metals

Client: ARCADIS U.S., Inc.
Laboratory ID: MA26019-007
Description: G4MW028
Matrix: Aqueous
Date Sampled: 01/25/2011 1410
Date Received: 01/26/2011

Run	Prep Method	Analytical Method	Dilution	Analysis Date	Analyst	Prep Date	Batch
1		7470A	1	01/28/2011 1648	BNW	01/28/2011 1145	51589
1	3005A	6010C	1	02/01/2011 0053	CDF	01/28/2011 0915	51574

Parameter	CAS Number	Analytical Method	Result	Q	PQL	MDL	Units	Run
Dissolved Arsenic	7440-38-2	6010C	ND		0.010	0.0040	mg/L	1
Dissolved Barium	7440-39-3	6010C	0.088		0.025	0.0075	mg/L	1
Dissolved Cadmium	7440-43-9	6010C	ND		0.0020	0.00060	mg/L	1
Dissolved Chromium	7440-47-3	6010C	0.035		0.0050	0.0021	mg/L	1
Dissolved Lead	7439-92-1	6010C	0.011		0.010	0.0019	mg/L	1
Dissolved Mercury	7439-97-6	7470A	0.00014		0.00010	0.000053	mg/L	1
Dissolved Selenium	7782-49-2	6010C	0.0027	J	0.010	0.0026	mg/L	1
Dissolved Silver	7440-22-4	6010C	0.00040	J	0.0050	0.00040	mg/L	1

PQL = Practical quantitation limit
B = Detected in the method blank
E = Quantitation of compound exceeded the calibration range
ND = Not detected at or above the MDL
J = Estimated result < PQL and ≥ MDL
P = The RPD between two GC columns exceeds 40%
Where applicable, all soil sample analysis are reported on a dry weight basis unless flagged with a "W"
N = Recovery is out of criteria
H = Out of holding time

RCRA Metals

Client: ARCADIS U.S., Inc.
Laboratory ID: MA26019-007
Description: G4MW028
Matrix: Aqueous
Date Sampled: 01/25/2011 1410
Date Received: 01/26/2011

Run	Prep Method	Analytical Method	Dilution	Analysis Date	Analyst	Prep Date	Batch
1		7470A	1	01/28/2011 1646	BNW	01/28/2011 1145	51589
1	3005A	6010C	1	02/01/2011 0432	CDF	01/27/2011 1005	51507

Parameter	CAS Number	Analytical Method	Result	Q	PQL	MDL	Units	Run
Arsenic	7440-38-2	6010C	0.0075	J	0.010	0.0040	mg/L	1
Barium	7440-39-3	6010C	0.10		0.025	0.0075	mg/L	1
Cadmium	7440-43-9	6010C	ND		0.0020	0.00060	mg/L	1
Chromium	7440-47-3	6010C	0.14		0.0050	0.0021	mg/L	1
Lead	7439-92-1	6010C	0.060		0.010	0.0019	mg/L	1
Mercury	7439-97-6	7470A	0.0011		0.00010	0.000053	mg/L	1
Selenium	7782-49-2	6010C	0.0099	J	0.010	0.0026	mg/L	1
Silver	7440-22-4	6010C	0.0024	J	0.0050	0.00040	mg/L	1

PQL = Practical quantitation limit
B = Detected in the method blank
E = Quantitation of compound exceeded the calibration range
ND = Not detected at or above the MDL
J = Estimated result < PQL and ≥ MDL
P = The RPD between two GC columns exceeds 40%
Where applicable, all soil sample analysis are reported on a dry weight basis unless flagged with a "W"
N = Recovery is out of criteria
H = Out of holding time

Volatile Organic Compounds by GC/MS

Client: ARCADIS U.S., Inc.
Laboratory ID: MA26019-008
Description: TRIP BLANK
Matrix: Aqueous
Date Sampled: 01/25/2011 1020
Date Received: 01/26/2011

Run	Prep Method	Analytical Method	Dilution	Analysis Date	Analyst	Prep Date	Batch
1	5030B	8260B	1	01/28/2011 0107	DLB		51631

Parameter	CAS Number	Analytical Method	Result	Q	PQL	MDL	Units	Run
Acetone	67-64-1	8260B	ND		20	6.7	ug/L	1
Benzene	71-43-2	8260B	ND		1.0	0.13	ug/L	1
Bromodichloromethane	75-27-4	8260B	ND		1.0	0.33	ug/L	1
Bromoform	75-25-2	8260B	ND		1.0	0.66	ug/L	1
Bromomethane (Methyl bromide)	74-83-9	8260B	ND		2.0	0.80	ug/L	1
2-Butanone (MEK)	78-93-3	8260B	ND		10	2.0	ug/L	1
Carbon disulfide	75-15-0	8260B	ND		1.0	0.097	ug/L	1
Carbon tetrachloride	56-23-5	8260B	ND		1.0	0.14	ug/L	1
Chlorobenzene	108-90-7	8260B	ND		2.0	0.33	ug/L	1
Chloroethane	75-00-3	8260B	ND		2.0	0.47	ug/L	1
Chloroform	67-66-3	8260B	ND		1.0	0.33	ug/L	1
Chloromethane (Methyl chloride)	74-87-3	8260B	ND		1.0	0.35	ug/L	1
Dibromochloromethane	124-48-1	8260B	ND		1.0	0.33	ug/L	1
1,4-Dichlorobenzene	106-46-7	8260B	ND		1.0	0.33	ug/L	1
1,3-Dichlorobenzene	541-73-1	8260B	ND		1.0	0.33	ug/L	1
1,2-Dichlorobenzene	95-50-1	8260B	ND		1.0	0.33	ug/L	1
1,2-Dichloroethane	107-06-2	8260B	ND		1.0	0.15	ug/L	1
1,1-Dichloroethane	75-34-3	8260B	ND		1.0	0.13	ug/L	1
trans-1,2-Dichloroethene	156-60-5	8260B	ND		1.0	0.21	ug/L	1
cis-1,2-Dichloroethene	156-59-2	8260B	ND		1.0	0.12	ug/L	1
1,1-Dichloroethene	75-35-4	8260B	ND		1.0	0.16	ug/L	1
1,2-Dichloropropane	78-87-5	8260B	ND		1.0	0.19	ug/L	1
trans-1,3-Dichloropropene	10061-02-6	8260B	ND		1.0	0.11	ug/L	1
cis-1,3-Dichloropropene	10061-01-5	8260B	ND		1.0	0.092	ug/L	1
Ethylbenzene	100-41-4	8260B	ND		1.0	0.33	ug/L	1
2-Hexanone	591-78-6	8260B	ND		10	0.27	ug/L	1
Methyl tertiary butyl ether (MTBE)	1634-04-4	8260B	ND		1.0	0.40	ug/L	1
4-Methyl-2-pentanone	108-10-1	8260B	ND		10	0.31	ug/L	1
Methylene chloride	75-09-2	8260B	0.35	J	1.0	0.33	ug/L	1
Styrene	100-42-5	8260B	ND		1.0	0.12	ug/L	1
1,1,2,2-Tetrachloroethane	79-34-5	8260B	ND		1.0	0.16	ug/L	1
Tetrachloroethene	127-18-4	8260B	ND		1.0	0.13	ug/L	1
Toluene	108-88-3	8260B	ND		1.0	0.33	ug/L	1
1,2,4-Trichlorobenzene	120-82-1	8260B	ND		1.0	0.51	ug/L	1
1,1,2-Trichloroethane	79-00-5	8260B	ND		1.0	0.21	ug/L	1
1,1,1-Trichloroethane	71-55-6	8260B	ND		1.0	0.074	ug/L	1
Trichloroethene	79-01-6	8260B	ND		1.0	0.18	ug/L	1
Vinyl chloride	75-01-4	8260B	ND		1.0	0.054	ug/L	1
Xylenes (total)	1330-20-7	8260B	ND		1.0	0.33	ug/L	1

PQL = Practical quantitation limit
B = Detected in the method blank
E = Quantitation of compound exceeded the calibration range
ND = Not detected at or above the MDL
J = Estimated result < PQL and ≥ MDL
P = The RPD between two GC columns exceeds 40%
Where applicable, all soil sample analysis are reported on a dry weight basis unless flagged with a "W"
N = Recovery is out of criteria
H = Out of holding time

Volatile Organic Compounds by GC/MS

Client: ARCADIS U.S., Inc.
Laboratory ID: MA26019-008
Description: TRIP BLANK
Matrix: Aqueous
Date Sampled: 01/25/2011 1020
Date Received: 01/26/2011

Surrogate	Q	Run 1 % Recovery	Acceptance Limits
1,2-Dichloroethane-d4		101	70-130
Bromofluorobenzene		108	70-130
Toluene-d8		103	70-130

PQL = Practical quantitation limit
B = Detected in the method blank
E = Quantitation of compound exceeded the calibration range
ND = Not detected at or above the MDL
J = Estimated result < PQL and ≥ MDL
P = The RPD between two GC columns exceeds 40%
Where applicable, all soil sample analysis are reported on a dry weight basis unless flagged with a "W"
N = Recovery is out of criteria
H = Out of holding time

Inorganic non-metals

Client: ARCADIS U.S., Inc.
Laboratory ID: MA26019-009
Description: G4MW016
Matrix: Aqueous
Date Sampled: 01/26/2011 1030
Date Received: 01/27/2011

Run	Prep Method	Analytical Method	Dilution	Analysis Date	Analyst	Prep Date	Batch
1		(Alkalinity) SM 2320B	1	01/28/2011 1704	HBB		51698
1		(Chloride) 300.0	1	01/28/2011 2036	HBB		51732
1		(Nitrate - N) 353.2	1	01/27/2011 1035	SMH		51519
1		(Nitrite - N) 353.2 REV 2	1	01/27/2011 1035	SMH		51443
1		(Sulfate) 300.0	5	02/04/2011 0838	HBB		52138
1		(TOC) 5310D	1	02/04/2011 0412	HBB		52108

Parameter	CAS Number	Analytical Method	Result	Q	PQL	MDL	Units	Run
Alkalinity		SM 2320B	ND		10	3.9	mg/L	1
Chloride		300.0	4.4		1.0	0.11	mg/L	1
Nitrate - N		353.2	ND		0.020	0.0013	mg/L	1
Nitrite - N		353.2 REV 2	0.016	J	0.020	0.0034	mg/L	1
Sulfate		300.0	210		5.0	1.4	mg/L	1
TOC		5310D	3.3		1.0	0.063	mg/L	1

PQL = Practical quantitation limit
B = Detected in the method blank
E = Quantitation of compound exceeded the calibration range
ND = Not detected at or above the MDL
J = Estimated result < PQL and ≥ MDL
P = The RPD between two GC columns exceeds 40%
Where applicable, all soil sample analysis are reported on a dry weight basis unless flagged with a "W"
N = Recovery is out of criteria
H = Out of holding time

Volatile Organic Compounds by GC/MS

Client: ARCADIS U.S., Inc.
Laboratory ID: MA26019-009
Description: G4MW016
Matrix: Aqueous
Date Sampled: 01/26/2011 1030
Date Received: 01/27/2011

Run	Prep Method	Analytical Method	Dilution	Analysis Date	Analyst	Prep Date	Batch
1	5030B	8260B	1	01/29/2011 0344	DLB		52835

Parameter	CAS Number	Analytical Method	Result	Q	PQL	MDL	Units	Run
Acetone	67-64-1	8260B	ND		20	6.7	ug/L	1
Benzene	71-43-2	8260B	0.15	J	1.0	0.13	ug/L	1
Bromodichloromethane	75-27-4	8260B	ND		1.0	0.33	ug/L	1
Bromoform	75-25-2	8260B	ND		1.0	0.66	ug/L	1
Bromomethane (Methyl bromide)	74-83-9	8260B	ND		2.0	0.80	ug/L	1
2-Butanone (MEK)	78-93-3	8260B	ND		10	2.0	ug/L	1
Carbon disulfide	75-15-0	8260B	ND		1.0	0.097	ug/L	1
Carbon tetrachloride	56-23-5	8260B	ND		1.0	0.14	ug/L	1
Chlorobenzene	108-90-7	8260B	ND		2.0	0.33	ug/L	1
Chloroethane	75-00-3	8260B	ND		2.0	0.47	ug/L	1
Chloroform	67-66-3	8260B	ND		1.0	0.33	ug/L	1
Chloromethane (Methyl chloride)	74-87-3	8260B	ND		1.0	0.35	ug/L	1
Dibromochloromethane	124-48-1	8260B	ND		1.0	0.33	ug/L	1
1,4-Dichlorobenzene	106-46-7	8260B	ND		1.0	0.33	ug/L	1
1,3-Dichlorobenzene	541-73-1	8260B	ND		1.0	0.33	ug/L	1
1,2-Dichlorobenzene	95-50-1	8260B	ND		1.0	0.33	ug/L	1
1,2-Dichloroethane	107-06-2	8260B	ND		1.0	0.15	ug/L	1
1,1-Dichloroethane	75-34-3	8260B	ND		1.0	0.13	ug/L	1
trans-1,2-Dichloroethene	156-60-5	8260B	3.9		1.0	0.21	ug/L	1
cis-1,2-Dichloroethene	156-59-2	8260B	13		1.0	0.12	ug/L	1
1,1-Dichloroethene	75-35-4	8260B	0.50	J	1.0	0.16	ug/L	1
1,2-Dichloropropane	78-87-5	8260B	ND		1.0	0.19	ug/L	1
trans-1,3-Dichloropropene	10061-02-6	8260B	ND		1.0	0.11	ug/L	1
cis-1,3-Dichloropropene	10061-01-5	8260B	ND		1.0	0.092	ug/L	1
Ethylbenzene	100-41-4	8260B	ND		1.0	0.33	ug/L	1
2-Hexanone	591-78-6	8260B	ND		10	0.27	ug/L	1
Methyl tertiary butyl ether (MTBE)	1634-04-4	8260B	ND		1.0	0.40	ug/L	1
4-Methyl-2-pentanone	108-10-1	8260B	ND		10	0.31	ug/L	1
Methylene chloride	75-09-2	8260B	ND		1.0	0.33	ug/L	1
Styrene	100-42-5	8260B	ND		1.0	0.12	ug/L	1
1,1,2,2-Tetrachloroethane	79-34-5	8260B	ND		1.0	0.16	ug/L	1
Tetrachloroethene	127-18-4	8260B	1.9		1.0	0.13	ug/L	1
Toluene	108-88-3	8260B	ND		1.0	0.33	ug/L	1
1,2,4-Trichlorobenzene	120-82-1	8260B	ND		1.0	0.51	ug/L	1
1,1,2-Trichloroethane	79-00-5	8260B	ND		1.0	0.21	ug/L	1
1,1,1-Trichloroethane	71-55-6	8260B	ND		1.0	0.074	ug/L	1
Trichloroethene	79-01-6	8260B	15		1.0	0.18	ug/L	1
Vinyl chloride	75-01-4	8260B	ND		1.0	0.054	ug/L	1
Xylenes (total)	1330-20-7	8260B	ND		1.0	0.33	ug/L	1

PQL = Practical quantitation limit
B = Detected in the method blank
E = Quantitation of compound exceeded the calibration range
ND = Not detected at or above the MDL
J = Estimated result < PQL and ≥ MDL
P = The RPD between two GC columns exceeds 40%
Where applicable, all soil sample analysis are reported on a dry weight basis unless flagged with a "W"
N = Recovery is out of criteria
H = Out of holding time

Volatile Organic Compounds by GC/MS

Client: ARCADIS U.S., Inc.
Laboratory ID: MA26019-009
Description: G4MW016
Matrix: Aqueous
Date Sampled: 01/26/2011 1030
Date Received: 01/27/2011

Surrogate	Q	Run 1 % Recovery	Acceptance Limits
1,2-Dichloroethane-d4		114	70-130
Bromofluorobenzene		113	70-130
Toluene-d8		106	70-130

PQL = Practical quantitation limit
B = Detected in the method blank
E = Quantitation of compound exceeded the calibration range
ND = Not detected at or above the MDL
J = Estimated result < PQL and ≥ MDL
P = The RPD between two GC columns exceeds 40%
Where applicable, all soil sample analysis are reported on a dry weight basis unless flagged with a "W"
N = Recovery is out of criteria
H = Out of holding time

Semivolatile Organic Compounds by GC/MS

Client: ARCADIS U.S., Inc.
Laboratory ID: MA26019-009
Description: G4MW016
Matrix: Aqueous
Date Sampled: 01/26/2011 1030
Date Received: 01/27/2011

Run	Prep Method	Analytical Method	Dilution	Analysis Date	Analyst	Prep Date	Batch
1	3520C	8270D	1	02/01/2011 2220	WD	01/28/2011 1207	51601

Parameter	CAS Number	Analytical Method	Result	Q	PQL	MDL	Units	Run
Acenaphthene	83-32-9	8270D	ND		1.0	0.090	ug/L	1
Acenaphthylene	208-96-8	8270D	ND		1.0	0.16	ug/L	1
Anthracene	120-12-7	8270D	ND		1.0	0.13	ug/L	1
Benzo(a)anthracene	56-55-3	8270D	ND		1.0	0.15	ug/L	1
Benzo(a)pyrene	50-32-8	8270D	ND		1.0	0.16	ug/L	1
Benzo(b)fluoranthene	205-99-2	8270D	ND		1.0	0.20	ug/L	1
Benzo(g,h,i)perylene	191-24-2	8270D	ND		1.0	0.23	ug/L	1
Benzo(k)fluoranthene	207-08-9	8270D	ND		1.0	0.12	ug/L	1
4-Bromophenyl phenyl ether	101-55-3	8270D	ND		1.0	0.12	ug/L	1
Butyl benzyl phthalate	85-68-7	8270D	ND		5.0	1.7	ug/L	1
Carbazole	86-74-8	8270D	ND		1.0	0.25	ug/L	1
4-Chloro-3-methyl phenol	59-50-7	8270D	ND		1.0	0.22	ug/L	1
4-Chloroaniline	106-47-8	8270D	ND		1.0	0.13	ug/L	1
bis(2-Chloroethoxy)methane	111-91-1	8270D	ND		1.0	0.13	ug/L	1
bis(2-Chloroisopropyl)ether	108-60-1	8270D	ND		1.0	0.080	ug/L	1
2-Chloronaphthalene	91-58-7	8270D	ND		1.0	0.12	ug/L	1
2-Chlorophenol	95-57-8	8270D	ND		1.0	0.13	ug/L	1
4-Chlorophenyl phenyl ether	7005-72-3	8270D	ND		1.0	0.11	ug/L	1
Chrysene	218-01-9	8270D	ND		1.0	0.12	ug/L	1
Dibenzo(a,h)anthracene	53-70-3	8270D	ND		1.0	0.13	ug/L	1
Dibenzofuran	132-64-9	8270D	ND		1.0	0.16	ug/L	1
3,3'-Dichlorobenzidine	91-94-1	8270D	ND		5.0	0.81	ug/L	1
2,4-Dichlorophenol	120-83-2	8270D	ND		1.0	0.15	ug/L	1
Diethylphthalate	84-66-2	8270D	ND		5.0	1.7	ug/L	1
Dimethyl phthalate	131-11-3	8270D	ND		5.0	1.7	ug/L	1
2,4-Dimethylphenol	105-67-9	8270D	ND		1.0	0.31	ug/L	1
Di-n-butyl phthalate	84-74-2	8270D	ND		5.0	1.7	ug/L	1
4,6-Dinitro-2-methylphenol	534-52-1	8270D	ND		5.0	1.5	ug/L	1
2,4-Dinitrophenol	51-28-5	8270D	ND		5.0	0.25	ug/L	1
2,4-Dinitrotoluene	121-14-2	8270D	ND		2.0	0.45	ug/L	1
2,6-Dinitrotoluene	606-20-2	8270D	ND		2.0	0.40	ug/L	1
Di-n-octylphthalate	117-84-0	8270D	ND		5.0	1.7	ug/L	1
bis(2-Ethylhexyl)phthalate	117-81-7	8270D	ND		5.0	1.7	ug/L	1
Fluoranthene	206-44-0	8270D	ND		1.0	0.21	ug/L	1
Fluorene	86-73-7	8270D	ND		1.0	0.10	ug/L	1
Hexachlorobenzene	118-74-1	8270D	ND		1.0	0.21	ug/L	1
Hexachlorobutadiene	87-68-3	8270D	ND		1.0	0.090	ug/L	1
Hexachlorocyclopentadiene	77-47-4	8270D	ND		5.0	0.23	ug/L	1
Hexachloroethane	67-72-1	8270D	ND		1.0	0.11	ug/L	1
Indeno(1,2,3-c,d)pyrene	193-39-5	8270D	ND		1.0	0.23	ug/L	1
Isophorone	78-59-1	8270D	ND		1.0	0.080	ug/L	1
2-Methylnaphthalene	91-57-6	8270D	ND		1.0	0.080	ug/L	1
2-Methylphenol	95-48-7	8270D	ND		1.0	0.17	ug/L	1
3 & 4-Methylphenol	106-44-5	8270D	ND		2.0	0.57	ug/L	1

PQL = Practical quantitation limit
B = Detected in the method blank
E = Quantitation of compound exceeded the calibration range
ND = Not detected at or above the MDL
J = Estimated result < PQL and ≥ MDL
P = The RPD between two GC columns exceeds 40%
Where applicable, all soil sample analysis are reported on a dry weight basis unless flagged with a "W"
N = Recovery is out of criteria
H = Out of holding time

Semivolatile Organic Compounds by GC/MS

Client: ARCADIS U.S., Inc.
Laboratory ID: MA26019-009
Description: G4MW016
Matrix: Aqueous
Date Sampled: 01/26/2011 1030
Date Received: 01/27/2011

Run	Prep Method	Analytical Method	Dilution	Analysis Date	Analyst	Prep Date	Batch
1	3520C	8270D	1	02/01/2011 2220	WD	01/28/2011 1207	51601

Parameter	CAS Number	Analytical Method	Result	Q	PQL	MDL	Units	Run
Naphthalene	91-20-3	8270D	ND		1.0	0.070	ug/L	1
2-Nitroaniline	88-74-4	8270D	ND		2.0	0.55	ug/L	1
3-Nitroaniline	99-09-2	8270D	ND		2.0	0.77	ug/L	1
4-Nitroaniline	100-01-6	8270D	ND		2.0	0.39	ug/L	1
Nitrobenzene	98-95-3	8270D	ND		1.0	0.10	ug/L	1
2-Nitrophenol	88-75-5	8270D	ND		2.0	0.27	ug/L	1
4-Nitrophenol	100-02-7	8270D	ND		5.0	0.64	ug/L	1
N-Nitrosodi-n-propylamine	621-64-7	8270D	ND		1.0	0.080	ug/L	1
N-Nitrosodiphenylamine (Diphenylamine)	86-30-6	8270D	ND		1.0	0.38	ug/L	1
Pentachlorophenol	87-86-5	8270D	ND		5.0	0.54	ug/L	1
Phenanthrene	85-01-8	8270D	ND		1.0	0.18	ug/L	1
Phenol	108-95-2	8270D	ND		1.0	0.11	ug/L	1
Pyrene	129-00-0	8270D	ND		1.0	0.16	ug/L	1
2,4,5-Trichlorophenol	95-95-4	8270D	ND		1.0	0.18	ug/L	1
2,4,6-Trichlorophenol	88-06-2	8270D	ND		1.0	0.22	ug/L	1

Surrogate	Q	Run 1 % Recovery	Acceptance Limits
2-Fluorobiphenyl		86	37-129
2-Fluorophenol		80	24-127
Nitrobenzene-d5		84	38-127
Phenol-d5		73	28-128
Terphenyl-d14		75	10-148
2,4,6-Tribromophenol		82	41-144

PQL = Practical quantitation limit
B = Detected in the method blank
E = Quantitation of compound exceeded the calibration range
ND = Not detected at or above the MDL
J = Estimated result < PQL and ≥ MDL
P = The RPD between two GC columns exceeds 40%
Where applicable, all soil sample analysis are reported on a dry weight basis unless flagged with a "W"
N = Recovery is out of criteria
H = Out of holding time

Dissolved RCRA Metals

Client: ARCADIS U.S., Inc.
Laboratory ID: MA26019-009
Description: G4MW016
Matrix: Aqueous
Date Sampled: 01/26/2011 1030
Date Received: 01/27/2011

Run	Prep Method	Analytical Method	Dilution	Analysis Date	Analyst	Prep Date	Batch
1		7470A	1	01/28/2011 1653	BNW	01/28/2011 1145	51589
1	3005A	6010C	1	01/31/2011 2039	CDF	01/28/2011 1810	51655

Parameter	CAS Number	Analytical Method	Result	Q	PQL	MDL	Units	Run
Dissolved Arsenic	7440-38-2	6010C	ND		0.010	0.0040	mg/L	1
Dissolved Barium	7440-39-3	6010C	0.034		0.025	0.0075	mg/L	1
Dissolved Cadmium	7440-43-9	6010C	ND		0.0020	0.00060	mg/L	1
Dissolved Chromium	7440-47-3	6010C	ND		0.0050	0.0021	mg/L	1
Dissolved Lead	7439-92-1	6010C	ND		0.010	0.0019	mg/L	1
Dissolved Mercury	7439-97-6	7470A	ND		0.00010	0.000053	mg/L	1
Dissolved Selenium	7782-49-2	6010C	ND		0.010	0.0026	mg/L	1
Dissolved Silver	7440-22-4	6010C	0.0016	J	0.0050	0.00040	mg/L	1

PQL = Practical quantitation limit
B = Detected in the method blank
E = Quantitation of compound exceeded the calibration range
ND = Not detected at or above the MDL
J = Estimated result < PQL and ≥ MDL
P = The RPD between two GC columns exceeds 40%
Where applicable, all soil sample analysis are reported on a dry weight basis unless flagged with a "W"
N = Recovery is out of criteria
H = Out of holding time

RCRA Metals

Client: ARCADIS U.S., Inc.
Laboratory ID: MA26019-009
Description: G4MW016
Matrix: Aqueous
Date Sampled: 01/26/2011 1030
Date Received: 01/27/2011

Run	Prep Method	Analytical Method	Dilution	Analysis Date	Analyst	Prep Date	Batch
1		7470A	1	01/28/2011 1651	BNW	01/28/2011 1145	51589
1	3005A	6010C	1	02/01/2011 0113	CDF	01/28/2011 0915	51574
2	3005A	6010C	1	02/01/2011 1412	CDF	01/28/2011 0915	51574

Parameter	CAS Number	Analytical Method	Result	Q	PQL	MDL	Units	Run
Arsenic	7440-38-2	6010C	0.0048	J	0.010	0.0040	mg/L	1
Barium	7440-39-3	6010C	0.034		0.025	0.0075	mg/L	1
Cadmium	7440-43-9	6010C	ND		0.0020	0.00060	mg/L	1
Chromium	7440-47-3	6010C	ND		0.0050	0.0021	mg/L	1
Lead	7439-92-1	6010C	ND		0.010	0.0019	mg/L	1
Mercury	7439-97-6	7470A	ND		0.00010	0.000053	mg/L	1
Selenium	7782-49-2	6010C	ND		0.010	0.0026	mg/L	2
Silver	7440-22-4	6010C	0.00095	J	0.0050	0.00040	mg/L	1

PQL = Practical quantitation limit
B = Detected in the method blank
E = Quantitation of compound exceeded the calibration range
ND = Not detected at or above the MDL
J = Estimated result < PQL and ≥ MDL
P = The RPD between two GC columns exceeds 40%
Where applicable, all soil sample analysis are reported on a dry weight basis unless flagged with a "W"
N = Recovery is out of criteria
H = Out of holding time

Inorganic non-metals

Client: ARCADIS U.S., Inc.
Laboratory ID: MA26019-010
Description: G4DUP-01
Matrix: Aqueous
Date Sampled: 01/26/2011
Date Received: 01/27/2011

Run	Prep Method	Analytical Method	Dilution	Analysis Date	Analyst	Prep Date	Batch
1		(Alkalinity) SM 2320B	1	01/28/2011 1704	HBB		51698
1		(Chloride) 300.0	1	01/28/2011 2059	HBB		51732
1		(Nitrate - N) 353.2	1	01/27/2011 1039	SMH		51519
1		(Nitrite - N) 353.2 REV 2	1	01/27/2011 1039	SMH		51443
1		(Sulfate) 300.0	5	02/04/2011 0900	HBB		52138
1		(TOC) 5310D	1	02/04/2011 0506	HBB		52108

Parameter	CAS Number	Analytical Method	Result	Q	PQL	MDL	Units	Run
Alkalinity		SM 2320B	ND		10	3.9	mg/L	1
Chloride		300.0	4.0		1.0	0.11	mg/L	1
Nitrate - N		353.2	0.038		0.020	0.0013	mg/L	1
Nitrite - N		353.2 REV 2	0.019	J	0.020	0.0034	mg/L	1
Sulfate		300.0	230		5.0	1.4	mg/L	1
TOC		5310D	3.5		1.0	0.063	mg/L	1

PQL = Practical quantitation limit
B = Detected in the method blank
E = Quantitation of compound exceeded the calibration range
ND = Not detected at or above the MDL
J = Estimated result < PQL and ≥ MDL
P = The RPD between two GC columns exceeds 40%
Where applicable, all soil sample analysis are reported on a dry weight basis unless flagged with a "W"
N = Recovery is out of criteria
H = Out of holding time

Volatile Organic Compounds by GC/MS

Client: ARCADIS U.S., Inc.
Laboratory ID: MA26019-010
Description: G4DUP-01
Matrix: Aqueous
Date Sampled: 01/26/2011
Date Received: 01/27/2011

Run	Prep Method	Analytical Method	Dilution	Analysis Date	Analyst	Prep Date	Batch
1	5030B	8260B	1	01/29/2011 0405	DLB		52835

Parameter	CAS Number	Analytical Method	Result	Q	PQL	MDL	Units	Run
Acetone	67-64-1	8260B	ND		20	6.7	ug/L	1
Benzene	71-43-2	8260B	0.16	J	1.0	0.13	ug/L	1
Bromodichloromethane	75-27-4	8260B	ND		1.0	0.33	ug/L	1
Bromoform	75-25-2	8260B	ND		1.0	0.66	ug/L	1
Bromomethane (Methyl bromide)	74-83-9	8260B	ND		2.0	0.80	ug/L	1
2-Butanone (MEK)	78-93-3	8260B	ND		10	2.0	ug/L	1
Carbon disulfide	75-15-0	8260B	ND		1.0	0.097	ug/L	1
Carbon tetrachloride	56-23-5	8260B	ND		1.0	0.14	ug/L	1
Chlorobenzene	108-90-7	8260B	ND		2.0	0.33	ug/L	1
Chloroethane	75-00-3	8260B	ND		2.0	0.47	ug/L	1
Chloroform	67-66-3	8260B	ND		1.0	0.33	ug/L	1
Chloromethane (Methyl chloride)	74-87-3	8260B	ND		1.0	0.35	ug/L	1
Dibromochloromethane	124-48-1	8260B	ND		1.0	0.33	ug/L	1
1,4-Dichlorobenzene	106-46-7	8260B	ND		1.0	0.33	ug/L	1
1,3-Dichlorobenzene	541-73-1	8260B	ND		1.0	0.33	ug/L	1
1,2-Dichlorobenzene	95-50-1	8260B	ND		1.0	0.33	ug/L	1
1,2-Dichloroethane	107-06-2	8260B	ND		1.0	0.15	ug/L	1
1,1-Dichloroethane	75-34-3	8260B	ND		1.0	0.13	ug/L	1
trans-1,2-Dichloroethene	156-60-5	8260B	4.0		1.0	0.21	ug/L	1
cis-1,2-Dichloroethene	156-59-2	8260B	13		1.0	0.12	ug/L	1
1,1-Dichloroethene	75-35-4	8260B	0.52	J	1.0	0.16	ug/L	1
1,2-Dichloropropane	78-87-5	8260B	ND		1.0	0.19	ug/L	1
trans-1,3-Dichloropropene	10061-02-6	8260B	ND		1.0	0.11	ug/L	1
cis-1,3-Dichloropropene	10061-01-5	8260B	ND		1.0	0.092	ug/L	1
Ethylbenzene	100-41-4	8260B	ND		1.0	0.33	ug/L	1
2-Hexanone	591-78-6	8260B	ND		10	0.27	ug/L	1
Methyl tertiary butyl ether (MTBE)	1634-04-4	8260B	ND		1.0	0.40	ug/L	1
4-Methyl-2-pentanone	108-10-1	8260B	ND		10	0.31	ug/L	1
Methylene chloride	75-09-2	8260B	ND		1.0	0.33	ug/L	1
Styrene	100-42-5	8260B	ND		1.0	0.12	ug/L	1
1,1,2,2-Tetrachloroethane	79-34-5	8260B	ND		1.0	0.16	ug/L	1
Tetrachloroethene	127-18-4	8260B	1.8		1.0	0.13	ug/L	1
Toluene	108-88-3	8260B	ND		1.0	0.33	ug/L	1
1,2,4-Trichlorobenzene	120-82-1	8260B	ND		1.0	0.51	ug/L	1
1,1,2-Trichloroethane	79-00-5	8260B	ND		1.0	0.21	ug/L	1
1,1,1-Trichloroethane	71-55-6	8260B	ND		1.0	0.074	ug/L	1
Trichloroethene	79-01-6	8260B	15		1.0	0.18	ug/L	1
Vinyl chloride	75-01-4	8260B	ND		1.0	0.054	ug/L	1
Xylenes (total)	1330-20-7	8260B	ND		1.0	0.33	ug/L	1

PQL = Practical quantitation limit
B = Detected in the method blank
E = Quantitation of compound exceeded the calibration range
ND = Not detected at or above the MDL
J = Estimated result < PQL and ≥ MDL
P = The RPD between two GC columns exceeds 40%
Where applicable, all soil sample analysis are reported on a dry weight basis unless flagged with a "W"
N = Recovery is out of criteria
H = Out of holding time

Volatile Organic Compounds by GC/MS

Client: ARCADIS U.S., Inc.	Laboratory ID: MA26019-010
Description: G4DUP-01	Matrix: Aqueous
Date Sampled: 01/26/2011	
Date Received: 01/27/2011	

Surrogate	Q	Run 1 % Recovery	Acceptance Limits
1,2-Dichloroethane-d4		114	70-130
Bromofluorobenzene		114	70-130
Toluene-d8		106	70-130

PQL = Practical quantitation limit
ND = Not detected at or above the MDL
Where applicable, all soil sample analysis are reported on a dry weight basis unless flagged with a "W"
B = Detected in the method blank
J = Estimated result < PQL and ≥ MDL
E = Quantitation of compound exceeded the calibration range
P = The RPD between two GC columns exceeds 40%
N = Recovery is out of criteria
H = Out of holding time

Semivolatile Organic Compounds by GC/MS

Client: ARCADIS U.S., Inc.
Laboratory ID: MA26019-010
Description: G4DUP-01
Matrix: Aqueous
Date Sampled: 01/26/2011
Date Received: 01/27/2011

Run	Prep Method	Analytical Method	Dilution	Analysis Date	Analyst	Prep Date	Batch
1	3520C	8270D	1	02/01/2011 2240	WD	01/28/2011 1207	51601

Parameter	CAS Number	Analytical Method	Result	Q	PQL	MDL	Units	Run
Acenaphthene	83-32-9	8270D	ND		1.0	0.090	ug/L	1
Acenaphthylene	208-96-8	8270D	ND		1.0	0.16	ug/L	1
Anthracene	120-12-7	8270D	ND		1.0	0.13	ug/L	1
Benzo(a)anthracene	56-55-3	8270D	ND		1.0	0.15	ug/L	1
Benzo(a)pyrene	50-32-8	8270D	ND		1.0	0.16	ug/L	1
Benzo(b)fluoranthene	205-99-2	8270D	ND		1.0	0.20	ug/L	1
Benzo(g,h,i)perylene	191-24-2	8270D	ND		1.0	0.23	ug/L	1
Benzo(k)fluoranthene	207-08-9	8270D	ND		1.0	0.12	ug/L	1
4-Bromophenyl phenyl ether	101-55-3	8270D	ND		1.0	0.12	ug/L	1
Butyl benzyl phthalate	85-68-7	8270D	ND		5.0	1.7	ug/L	1
Carbazole	86-74-8	8270D	ND		1.0	0.25	ug/L	1
4-Chloro-3-methyl phenol	59-50-7	8270D	ND		1.0	0.22	ug/L	1
4-Chloroaniline	106-47-8	8270D	ND		1.0	0.13	ug/L	1
bis(2-Chloroethoxy)methane	111-91-1	8270D	ND		1.0	0.13	ug/L	1
bis(2-Chloroisopropyl)ether	108-60-1	8270D	ND		1.0	0.080	ug/L	1
2-Chloronaphthalene	91-58-7	8270D	ND		1.0	0.12	ug/L	1
2-Chlorophenol	95-57-8	8270D	ND		1.0	0.13	ug/L	1
4-Chlorophenyl phenyl ether	7005-72-3	8270D	ND		1.0	0.11	ug/L	1
Chrysene	218-01-9	8270D	ND		1.0	0.12	ug/L	1
Dibenzo(a,h)anthracene	53-70-3	8270D	ND		1.0	0.13	ug/L	1
Dibenzofuran	132-64-9	8270D	ND		1.0	0.16	ug/L	1
3,3'-Dichlorobenzidine	91-94-1	8270D	ND		5.0	0.81	ug/L	1
2,4-Dichlorophenol	120-83-2	8270D	ND		1.0	0.15	ug/L	1
Diethylphthalate	84-66-2	8270D	ND		5.0	1.7	ug/L	1
Dimethyl phthalate	131-11-3	8270D	ND		5.0	1.7	ug/L	1
2,4-Dimethylphenol	105-67-9	8270D	ND		1.0	0.31	ug/L	1
Di-n-butyl phthalate	84-74-2	8270D	ND		5.0	1.7	ug/L	1
4,6-Dinitro-2-methylphenol	534-52-1	8270D	ND		5.0	1.5	ug/L	1
2,4-Dinitrophenol	51-28-5	8270D	ND		5.0	0.25	ug/L	1
2,4-Dinitrotoluene	121-14-2	8270D	ND		2.0	0.45	ug/L	1
2,6-Dinitrotoluene	606-20-2	8270D	ND		2.0	0.40	ug/L	1
Di-n-octylphthalate	117-84-0	8270D	ND		5.0	1.7	ug/L	1
bis(2-Ethylhexyl)phthalate	117-81-7	8270D	ND		5.0	1.7	ug/L	1
Fluoranthene	206-44-0	8270D	ND		1.0	0.21	ug/L	1
Fluorene	86-73-7	8270D	ND		1.0	0.10	ug/L	1
Hexachlorobenzene	118-74-1	8270D	ND		1.0	0.21	ug/L	1
Hexachlorobutadiene	87-68-3	8270D	ND		1.0	0.090	ug/L	1
Hexachlorocyclopentadiene	77-47-4	8270D	ND		5.0	0.23	ug/L	1
Hexachloroethane	67-72-1	8270D	ND		1.0	0.11	ug/L	1
Indeno(1,2,3-c,d)pyrene	193-39-5	8270D	ND		1.0	0.23	ug/L	1
Isophorone	78-59-1	8270D	ND		1.0	0.080	ug/L	1
2-Methylnaphthalene	91-57-6	8270D	ND		1.0	0.080	ug/L	1
2-Methylphenol	95-48-7	8270D	ND		1.0	0.17	ug/L	1
3 & 4-Methylphenol	106-44-5	8270D	ND		2.0	0.57	ug/L	1

PQL = Practical quantitation limit
B = Detected in the method blank
E = Quantitation of compound exceeded the calibration range
ND = Not detected at or above the MDL
J = Estimated result < PQL and ≥ MDL
P = The RPD between two GC columns exceeds 40%
Where applicable, all soil sample analysis are reported on a dry weight basis unless flagged with a "W"
N = Recovery is out of criteria
H = Out of holding time

Semivolatile Organic Compounds by GC/MS

Client: ARCADIS U.S., Inc.
Laboratory ID: MA26019-010
Description: G4DUP-01
Matrix: Aqueous
Date Sampled: 01/26/2011
Date Received: 01/27/2011

Run	Prep Method	Analytical Method	Dilution	Analysis Date	Analyst	Prep Date	Batch
1	3520C	8270D	1	02/01/2011 2240	WD	01/28/2011 1207	51601

Parameter	CAS Number	Analytical Method	Result	Q	PQL	MDL	Units	Run
Naphthalene	91-20-3	8270D	ND		1.0	0.070	ug/L	1
2-Nitroaniline	88-74-4	8270D	ND		2.0	0.55	ug/L	1
3-Nitroaniline	99-09-2	8270D	ND		2.0	0.77	ug/L	1
4-Nitroaniline	100-01-6	8270D	ND		2.0	0.39	ug/L	1
Nitrobenzene	98-95-3	8270D	ND		1.0	0.10	ug/L	1
2-Nitrophenol	88-75-5	8270D	ND		2.0	0.27	ug/L	1
4-Nitrophenol	100-02-7	8270D	ND		5.0	0.64	ug/L	1
N-Nitrosodi-n-propylamine	621-64-7	8270D	ND		1.0	0.080	ug/L	1
N-Nitrosodiphenylamine (Diphenylamine)	86-30-6	8270D	ND		1.0	0.38	ug/L	1
Pentachlorophenol	87-86-5	8270D	ND		5.0	0.54	ug/L	1
Phenanthrene	85-01-8	8270D	ND		1.0	0.18	ug/L	1
Phenol	108-95-2	8270D	ND		1.0	0.11	ug/L	1
Pyrene	129-00-0	8270D	ND		1.0	0.16	ug/L	1
2,4,5-Trichlorophenol	95-95-4	8270D	ND		1.0	0.18	ug/L	1
2,4,6-Trichlorophenol	88-06-2	8270D	ND		1.0	0.22	ug/L	1

Surrogate	Q	Run 1 % Recovery	Acceptance Limits
2-Fluorobiphenyl		73	37-129
2-Fluorophenol		67	24-127
Nitrobenzene-d5		69	38-127
Phenol-d5		62	28-128
Terphenyl-d14		48	10-148
2,4,6-Tribromophenol		63	41-144

PQL = Practical quantitation limit
B = Detected in the method blank
E = Quantitation of compound exceeded the calibration range
ND = Not detected at or above the MDL
J = Estimated result < PQL and ≥ MDL
P = The RPD between two GC columns exceeds 40%
Where applicable, all soil sample analysis are reported on a dry weight basis unless flagged with a "W"
N = Recovery is out of criteria
H = Out of holding time

Dissolved RCRA Metals

Client: ARCADIS U.S., Inc.
Laboratory ID: MA26019-010
Description: G4DUP-01
Matrix: Aqueous
Date Sampled: 01/26/2011
Date Received: 01/27/2011

Run	Prep Method	Analytical Method	Dilution	Analysis Date	Analyst	Prep Date	Batch
1		7470A	1	01/28/2011 1718	BNW	01/28/2011 1430	51591
1	3005A	6010C	1	01/31/2011 2106	CDF	01/28/2011 1810	51655

Parameter	CAS Number	Analytical Method	Result	Q	PQL	MDL	Units	Run
Dissolved Arsenic	7440-38-2	6010C	ND		0.010	0.0040	mg/L	1
Dissolved Barium	7440-39-3	6010C	0.033		0.025	0.0075	mg/L	1
Dissolved Cadmium	7440-43-9	6010C	ND		0.0020	0.00060	mg/L	1
Dissolved Chromium	7440-47-3	6010C	ND		0.0050	0.0021	mg/L	1
Dissolved Lead	7439-92-1	6010C	ND		0.010	0.0019	mg/L	1
Dissolved Mercury	7439-97-6	7470A	0.000056	J	0.00010	0.000053	mg/L	1
Dissolved Selenium	7782-49-2	6010C	ND		0.010	0.0026	mg/L	1
Dissolved Silver	7440-22-4	6010C	ND		0.0050	0.00040	mg/L	1

PQL = Practical quantitation limit
B = Detected in the method blank
E = Quantitation of compound exceeded the calibration range
ND = Not detected at or above the MDL
J = Estimated result < PQL and ≥ MDL
P = The RPD between two GC columns exceeds 40%
Where applicable, all soil sample analysis are reported on a dry weight basis unless flagged with a "W"
N = Recovery is out of criteria
H = Out of holding time

RCRA Metals

Client: ARCADIS U.S., Inc.
Description: G4DUP-01
Date Sampled: 01/26/2011
Date Received: 01/27/2011

Laboratory ID: MA26019-010
Matrix: Aqueous

Run	Prep Method	Analytical Method	Dilution	Analysis Date	Analyst	Prep Date	Batch
1		7470A	1	01/28/2011 1708	BNW	01/28/2011 1430	51591
1	3005A	6010C	1	02/01/2011 0120	CDF	01/28/2011 0915	51574
2	3005A	6010C	1	02/01/2011 1419	CDF	01/28/2011 0915	51574

Parameter	CAS Number	Analytical Method	Result	Q	PQL	MDL	Units	Run
Arsenic	7440-38-2	6010C	ND		0.010	0.0040	mg/L	1
Barium	7440-39-3	6010C	0.034		0.025	0.0075	mg/L	1
Cadmium	7440-43-9	6010C	ND		0.0020	0.00060	mg/L	1
Chromium	7440-47-3	6010C	ND		0.0050	0.0021	mg/L	1
Lead	7439-92-1	6010C	ND		0.010	0.0019	mg/L	1
Mercury	7439-97-6	7470A	ND		0.00010	0.000053	mg/L	1
Selenium	7782-49-2	6010C	0.0030	J	0.010	0.0026	mg/L	2
Silver	7440-22-4	6010C	ND		0.0050	0.00040	mg/L	1

PQL = Practical quantitation limit
ND = Not detected at or above the MDL
Where applicable, all soil sample analysis are reported on a dry weight basis unless flagged with a "W"
B = Detected in the method blank
J = Estimated result < PQL and ≥ MDL
E = Quantitation of compound exceeded the calibration range
P = The RPD between two GC columns exceeds 40%
N = Recovery is out of criteria
H = Out of holding time

Inorganic non-metals

Client: ARCADIS U.S., Inc.
Laboratory ID: MA26019-011
Description: G4MW042
Matrix: Aqueous
Date Sampled: 01/26/2011 1240
Date Received: 01/27/2011

Run	Prep Method	Analytical Method	Dilution	Analysis Date	Analyst	Prep Date	Batch
1		(Alkalinity) SM 2320B	1	01/28/2011 1704	HBB		51698
1		(Chloride) 300.0	1	01/28/2011 2206	HBB		51732
1		(Nitrate - N) 353.2	1	01/27/2011 1040	SMH		51519
1		(Nitrite - N) 353.2 REV 2	1	01/27/2011 1040	SMH		51443
1		(Sulfate) 300.0	1	01/28/2011 2206	HBB		51722
1		(TOC) 5310D	1	02/04/2011 0524	HBB		52108

Parameter	CAS Number	Analytical Method	Result	Q	PQL	MDL	Units	Run
Alkalinity		SM 2320B	280		10	3.9	mg/L	1
Chloride		300.0	5.2		1.0	0.11	mg/L	1
Nitrate - N		353.2	0.80		0.020	0.0013	mg/L	1
Nitrite - N		353.2 REV 2	0.035		0.020	0.0034	mg/L	1
Sulfate		300.0	5.0		1.0	0.28	mg/L	1
TOC		5310D	9.3		1.0	0.063	mg/L	1

PQL = Practical quantitation limit
B = Detected in the method blank
E = Quantitation of compound exceeded the calibration range
ND = Not detected at or above the MDL
J = Estimated result < PQL and ≥ MDL
P = The RPD between two GC columns exceeds 40%
Where applicable, all soil sample analysis are reported on a dry weight basis unless flagged with a "W"
N = Recovery is out of criteria
H = Out of holding time

Volatile Organic Compounds by GC/MS

Client: ARCADIS U.S., Inc.
Laboratory ID: MA26019-011
Description: G4MW042
Matrix: Aqueous
Date Sampled: 01/26/2011 1240
Date Received: 01/27/2011

Run	Prep Method	Analytical Method	Dilution	Analysis Date	Analyst	Prep Date	Batch
1	5030B	8260B	1	01/29/2011 0427	DLB		52835

Parameter	CAS Number	Analytical Method	Result	Q	PQL	MDL	Units	Run
Acetone	67-64-1	8260B	29		20	6.7	ug/L	1
Benzene	71-43-2	8260B	ND		1.0	0.13	ug/L	1
Bromodichloromethane	75-27-4	8260B	ND		1.0	0.33	ug/L	1
Bromoform	75-25-2	8260B	ND		1.0	0.66	ug/L	1
Bromomethane (Methyl bromide)	74-83-9	8260B	ND		2.0	0.80	ug/L	1
2-Butanone (MEK)	78-93-3	8260B	ND		10	2.0	ug/L	1
Carbon disulfide	75-15-0	8260B	ND		1.0	0.097	ug/L	1
Carbon tetrachloride	56-23-5	8260B	ND		1.0	0.14	ug/L	1
Chlorobenzene	108-90-7	8260B	ND		2.0	0.33	ug/L	1
Chloroethane	75-00-3	8260B	ND		2.0	0.47	ug/L	1
Chloroform	67-66-3	8260B	ND		1.0	0.33	ug/L	1
Chloromethane (Methyl chloride)	74-87-3	8260B	ND		1.0	0.35	ug/L	1
Dibromochloromethane	124-48-1	8260B	ND		1.0	0.33	ug/L	1
1,4-Dichlorobenzene	106-46-7	8260B	ND		1.0	0.33	ug/L	1
1,3-Dichlorobenzene	541-73-1	8260B	ND		1.0	0.33	ug/L	1
1,2-Dichlorobenzene	95-50-1	8260B	ND		1.0	0.33	ug/L	1
1,2-Dichloroethane	107-06-2	8260B	ND		1.0	0.15	ug/L	1
1,1-Dichloroethane	75-34-3	8260B	ND		1.0	0.13	ug/L	1
trans-1,2-Dichloroethene	156-60-5	8260B	ND		1.0	0.21	ug/L	1
cis-1,2-Dichloroethene	156-59-2	8260B	ND		1.0	0.12	ug/L	1
1,1-Dichloroethene	75-35-4	8260B	ND		1.0	0.16	ug/L	1
1,2-Dichloropropane	78-87-5	8260B	ND		1.0	0.19	ug/L	1
trans-1,3-Dichloropropene	10061-02-6	8260B	ND		1.0	0.11	ug/L	1
cis-1,3-Dichloropropene	10061-01-5	8260B	ND		1.0	0.092	ug/L	1
Ethylbenzene	100-41-4	8260B	ND		1.0	0.33	ug/L	1
2-Hexanone	591-78-6	8260B	ND		10	0.27	ug/L	1
Methyl tertiary butyl ether (MTBE)	1634-04-4	8260B	ND		1.0	0.40	ug/L	1
4-Methyl-2-pentanone	108-10-1	8260B	ND		10	0.31	ug/L	1
Methylene chloride	75-09-2	8260B	ND		1.0	0.33	ug/L	1
Styrene	100-42-5	8260B	ND		1.0	0.12	ug/L	1
1,1,2,2-Tetrachloroethane	79-34-5	8260B	ND		1.0	0.16	ug/L	1
Tetrachloroethene	127-18-4	8260B	ND		1.0	0.13	ug/L	1
Toluene	108-88-3	8260B	ND		1.0	0.33	ug/L	1
1,2,4-Trichlorobenzene	120-82-1	8260B	ND		1.0	0.51	ug/L	1
1,1,2-Trichloroethane	79-00-5	8260B	ND		1.0	0.21	ug/L	1
1,1,1-Trichloroethane	71-55-6	8260B	ND		1.0	0.074	ug/L	1
Trichloroethene	79-01-6	8260B	ND		1.0	0.18	ug/L	1
Vinyl chloride	75-01-4	8260B	ND		1.0	0.054	ug/L	1
Xylenes (total)	1330-20-7	8260B	ND		1.0	0.33	ug/L	1

PQL = Practical quantitation limit
B = Detected in the method blank
E = Quantitation of compound exceeded the calibration range
ND = Not detected at or above the MDL
J = Estimated result < PQL and ≥ MDL
P = The RPD between two GC columns exceeds 40%
Where applicable, all soil sample analysis are reported on a dry weight basis unless flagged with a "W"
N = Recovery is out of criteria
H = Out of holding time

Volatile Organic Compounds by GC/MS

Client: ARCADIS U.S., Inc.
Laboratory ID: MA26019-011
Description: G4MW042
Matrix: Aqueous
Date Sampled: 01/26/2011 1240
Date Received: 01/27/2011

Surrogate	Q	Run 1 % Recovery	Acceptance Limits
1,2-Dichloroethane-d4		114	70-130
Bromofluorobenzene		113	70-130
Toluene-d8		107	70-130

PQL = Practical quantitation limit
B = Detected in the method blank
E = Quantitation of compound exceeded the calibration range
ND = Not detected at or above the MDL
J = Estimated result < PQL and ≥ MDL
P = The RPD between two GC columns exceeds 40%
Where applicable, all soil sample analysis are reported on a dry weight basis unless flagged with a "W"
N = Recovery is out of criteria
H = Out of holding time

Semivolatile Organic Compounds by GC/MS

Client: ARCADIS U.S., Inc.
Laboratory ID: MA26019-011
Description: G4MW042
Matrix: Aqueous
Date Sampled: 01/26/2011 1240
Date Received: 01/27/2011

Run	Prep Method	Analytical Method	Dilution	Analysis Date	Analyst	Prep Date	Batch
1	3520C	8270D	1	02/01/2011 2259	WD	01/28/2011 1207	51601

Parameter	CAS Number	Analytical Method	Result	Q	PQL	MDL	Units	Run
Acenaphthene	83-32-9	8270D	ND		1.0	0.091	ug/L	1
Acenaphthylene	208-96-8	8270D	ND		1.0	0.16	ug/L	1
Anthracene	120-12-7	8270D	ND		1.0	0.13	ug/L	1
Benzo(a)anthracene	56-55-3	8270D	ND		1.0	0.15	ug/L	1
Benzo(a)pyrene	50-32-8	8270D	ND		1.0	0.16	ug/L	1
Benzo(b)fluoranthene	205-99-2	8270D	ND		1.0	0.20	ug/L	1
Benzo(g,h,i)perylene	191-24-2	8270D	ND		1.0	0.23	ug/L	1
Benzo(k)fluoranthene	207-08-9	8270D	ND		1.0	0.12	ug/L	1
4-Bromophenyl phenyl ether	101-55-3	8270D	ND		1.0	0.12	ug/L	1
Butyl benzyl phthalate	85-68-7	8270D	ND		5.1	1.7	ug/L	1
Carbazole	86-74-8	8270D	ND		1.0	0.25	ug/L	1
4-Chloro-3-methyl phenol	59-50-7	8270D	ND		1.0	0.22	ug/L	1
4-Chloroaniline	106-47-8	8270D	ND		1.0	0.13	ug/L	1
bis(2-Chloroethoxy)methane	111-91-1	8270D	ND		1.0	0.13	ug/L	1
bis(2-Chloroisopropyl)ether	108-60-1	8270D	ND		1.0	0.081	ug/L	1
2-Chloronaphthalene	91-58-7	8270D	ND		1.0	0.12	ug/L	1
2-Chlorophenol	95-57-8	8270D	ND		1.0	0.13	ug/L	1
4-Chlorophenyl phenyl ether	7005-72-3	8270D	ND		1.0	0.11	ug/L	1
Chrysene	218-01-9	8270D	ND		1.0	0.12	ug/L	1
Dibenzo(a,h)anthracene	53-70-3	8270D	ND		1.0	0.13	ug/L	1
Dibenzofuran	132-64-9	8270D	ND		1.0	0.16	ug/L	1
3,3'-Dichlorobenzidine	91-94-1	8270D	ND		5.1	0.82	ug/L	1
2,4-Dichlorophenol	120-83-2	8270D	ND		1.0	0.15	ug/L	1
Diethylphthalate	84-66-2	8270D	ND		5.1	1.7	ug/L	1
Dimethyl phthalate	131-11-3	8270D	ND		5.1	1.7	ug/L	1
2,4-Dimethylphenol	105-67-9	8270D	ND		1.0	0.31	ug/L	1
Di-n-butyl phthalate	84-74-2	8270D	ND		5.1	1.7	ug/L	1
4,6-Dinitro-2-methylphenol	534-52-1	8270D	ND		5.1	1.5	ug/L	1
2,4-Dinitrophenol	51-28-5	8270D	ND		5.1	0.25	ug/L	1
2,4-Dinitrotoluene	121-14-2	8270D	ND		2.0	0.45	ug/L	1
2,6-Dinitrotoluene	606-20-2	8270D	ND		2.0	0.40	ug/L	1
Di-n-octylphthalate	117-84-0	8270D	ND		5.1	1.7	ug/L	1
bis(2-Ethylhexyl)phthalate	117-81-7	8270D	ND		5.1	1.7	ug/L	1
Fluoranthene	206-44-0	8270D	ND		1.0	0.21	ug/L	1
Fluorene	86-73-7	8270D	ND		1.0	0.10	ug/L	1
Hexachlorobenzene	118-74-1	8270D	ND		1.0	0.21	ug/L	1
Hexachlorobutadiene	87-68-3	8270D	ND		1.0	0.091	ug/L	1
Hexachlorocyclopentadiene	77-47-4	8270D	ND		5.1	0.23	ug/L	1
Hexachloroethane	67-72-1	8270D	ND		1.0	0.11	ug/L	1
Indeno(1,2,3-c,d)pyrene	193-39-5	8270D	ND		1.0	0.23	ug/L	1
Isophorone	78-59-1	8270D	ND		1.0	0.081	ug/L	1
2-Methylnaphthalene	91-57-6	8270D	ND		1.0	0.081	ug/L	1
2-Methylphenol	95-48-7	8270D	ND		1.0	0.17	ug/L	1
3 & 4-Methylphenol	106-44-5	8270D	1.4	J	2.0	0.58	ug/L	1

PQL = Practical quantitation limit
B = Detected in the method blank
E = Quantitation of compound exceeded the calibration range
ND = Not detected at or above the MDL
J = Estimated result < PQL and ≥ MDL
P = The RPD between two GC columns exceeds 40%
Where applicable, all soil sample analysis are reported on a dry weight basis unless flagged with a "W"
N = Recovery is out of criteria
H = Out of holding time

Semivolatile Organic Compounds by GC/MS

Client: ARCADIS U.S., Inc.
Laboratory ID: MA26019-011
Description: G4MW042
Matrix: Aqueous
Date Sampled: 01/26/2011 1240
Date Received: 01/27/2011

Run	Prep Method	Analytical Method	Dilution	Analysis Date	Analyst	Prep Date	Batch
1	3520C	8270D	1	02/01/2011 2259	WD	01/28/2011 1207	51601

Parameter	CAS Number	Analytical Method	Result	Q	PQL	MDL	Units	Run
Naphthalene	91-20-3	8270D	ND		1.0	0.071	ug/L	1
2-Nitroaniline	88-74-4	8270D	ND		2.0	0.56	ug/L	1
3-Nitroaniline	99-09-2	8270D	ND		2.0	0.78	ug/L	1
4-Nitroaniline	100-01-6	8270D	ND		2.0	0.39	ug/L	1
Nitrobenzene	98-95-3	8270D	ND		1.0	0.10	ug/L	1
2-Nitrophenol	88-75-5	8270D	ND		2.0	0.27	ug/L	1
4-Nitrophenol	100-02-7	8270D	ND		5.1	0.65	ug/L	1
N-Nitrosodi-n-propylamine	621-64-7	8270D	ND		1.0	0.081	ug/L	1
N-Nitrosodiphenylamine (Diphenylamine)	86-30-6	8270D	ND		1.0	0.38	ug/L	1
Pentachlorophenol	87-86-5	8270D	ND		5.1	0.55	ug/L	1
Phenanthrene	85-01-8	8270D	ND		1.0	0.18	ug/L	1
Phenol	108-95-2	8270D	ND		1.0	0.11	ug/L	1
Pyrene	129-00-0	8270D	ND		1.0	0.16	ug/L	1
2,4,5-Trichlorophenol	95-95-4	8270D	ND		1.0	0.18	ug/L	1
2,4,6-Trichlorophenol	88-06-2	8270D	ND		1.0	0.22	ug/L	1

Surrogate	Q	Run 1 % Recovery	Acceptance Limits
2-Fluorobiphenyl		91	37-129
2-Fluorophenol		83	24-127
Nitrobenzene-d5		88	38-127
Phenol-d5		85	28-128
Terphenyl-d14		70	10-148
2,4,6-Tribromophenol		98	41-144

PQL = Practical quantitation limit
B = Detected in the method blank
E = Quantitation of compound exceeded the calibration range
ND = Not detected at or above the MDL
J = Estimated result < PQL and ≥ MDL
P = The RPD between two GC columns exceeds 40%
Where applicable, all soil sample analysis are reported on a dry weight basis unless flagged with a "W"
N = Recovery is out of criteria
H = Out of holding time

Dissolved RCRA Metals

Client: ARCADIS U.S., Inc.
Laboratory ID: MA26019-011
Description: G4MW042
Matrix: Aqueous
Date Sampled: 01/26/2011 1240
Date Received: 01/27/2011

Run	Prep Method	Analytical Method	Dilution	Analysis Date	Analyst	Prep Date	Batch
1		7470A	1	01/28/2011 1723	BNW	01/28/2011 1430	51591
1	3005A	6010C	1	01/31/2011 2119	CDF	01/28/2011 1810	51655

Parameter	CAS Number	Analytical Method	Result	Q	PQL	MDL	Units	Run
Dissolved Arsenic	7440-38-2	6010C	ND		0.010	0.0040	mg/L	1
Dissolved Barium	7440-39-3	6010C	0.058		0.025	0.0075	mg/L	1
Dissolved Cadmium	7440-43-9	6010C	ND		0.0020	0.00060	mg/L	1
Dissolved Chromium	7440-47-3	6010C	ND		0.0050	0.0021	mg/L	1
Dissolved Lead	7439-92-1	6010C	ND		0.010	0.0019	mg/L	1
Dissolved Mercury	7439-97-6	7470A	ND		0.00010	0.000053	mg/L	1
Dissolved Selenium	7782-49-2	6010C	ND		0.010	0.0026	mg/L	1
Dissolved Silver	7440-22-4	6010C	0.0011	J	0.0050	0.00040	mg/L	1

PQL = Practical quantitation limit
B = Detected in the method blank
E = Quantitation of compound exceeded the calibration range
ND = Not detected at or above the MDL
J = Estimated result < PQL and ≥ MDL
P = The RPD between two GC columns exceeds 40%
Where applicable, all soil sample analysis are reported on a dry weight basis unless flagged with a "W"
N = Recovery is out of criteria
H = Out of holding time

RCRA Metals

Client: ARCADIS U.S., Inc.
Laboratory ID: MA26019-011
Description: G4MW042
Matrix: Aqueous
Date Sampled: 01/26/2011 1240
Date Received: 01/27/2011

Run	Prep Method	Analytical Method	Dilution	Analysis Date	Analyst	Prep Date	Batch
1		7470A	1	01/28/2011 1721	BNW	01/28/2011 1430	51591
1	3005A	6010C	1	02/01/2011 0127	CDF	01/28/2011 0915	51574
2	3005A	6010C	1	02/01/2011 1426	CDF	01/28/2011 0915	51574

Parameter	CAS Number	Analytical Method	Result	Q	PQL	MDL	Units	Run
Arsenic	7440-38-2	6010C	ND		0.010	0.0040	mg/L	1
Barium	7440-39-3	6010C	0.071		0.025	0.0075	mg/L	1
Cadmium	7440-43-9	6010C	ND		0.0020	0.00060	mg/L	1
Chromium	7440-47-3	6010C	ND		0.0050	0.0021	mg/L	1
Lead	7439-92-1	6010C	ND		0.010	0.0019	mg/L	1
Mercury	7439-97-6	7470A	ND		0.00010	0.000053	mg/L	1
Selenium	7782-49-2	6010C	ND		0.010	0.0026	mg/L	2
Silver	7440-22-4	6010C	ND		0.0050	0.00040	mg/L	1

PQL = Practical quantitation limit
B = Detected in the method blank
E = Quantitation of compound exceeded the calibration range
ND = Not detected at or above the MDL
J = Estimated result < PQL and ≥ MDL
P = The RPD between two GC columns exceeds 40%
Where applicable, all soil sample analysis are reported on a dry weight basis unless flagged with a "W"
N = Recovery is out of criteria
H = Out of holding time

Inorganic non-metals

Client: ARCADIS U.S., Inc.
Laboratory ID: MA26019-012
Description: G4MW047
Matrix: Aqueous
Date Sampled: 01/26/2011 1435
Date Received: 01/27/2011

Run	Prep Method	Analytical Method	Dilution	Analysis Date	Analyst	Prep Date	Batch
1		(Alkalinity) SM 2320B	1	01/28/2011 1704	HBB		51698
1		(Chloride) 300.0	1	01/28/2011 2228	HBB		51732
1		(Nitrate - N) 353.2	1	01/27/2011 1041	SMH		51519
1		(Nitrite - N) 353.2 REV 2	1	01/27/2011 1041	SMH		51443
1		(Sulfate) 300.0	5	02/04/2011 0922	HBB		52138
1		(TOC) 5310D	1	02/04/2011 0542	HBB		52108

Parameter	CAS Number	Analytical Method	Result	Q	PQL	MDL	Units	Run
Alkalinity		SM 2320B	37		10	3.9	mg/L	1
Chloride		300.0	14		1.0	0.11	mg/L	1
Nitrate - N		353.2	ND		0.020	0.0013	mg/L	1
Nitrite - N		353.2 REV 2	0.032		0.020	0.0034	mg/L	1
Sulfate		300.0	130		5.0	1.4	mg/L	1
TOC		5310D	40		1.0	0.063	mg/L	1

PQL = Practical quantitation limit
B = Detected in the method blank
E = Quantitation of compound exceeded the calibration range
ND = Not detected at or above the MDL
J = Estimated result < PQL and ≥ MDL
P = The RPD between two GC columns exceeds 40%
Where applicable, all soil sample analysis are reported on a dry weight basis unless flagged with a "W"
N = Recovery is out of criteria
H = Out of holding time

Volatile Organic Compounds by GC/MS

Client: ARCADIS U.S., Inc.
Laboratory ID: MA26019-012
Description: G4MW047
Matrix: Aqueous
Date Sampled: 01/26/2011 1435
Date Received: 01/27/2011

Run	Prep Method	Analytical Method	Dilution	Analysis Date	Analyst	Prep Date	Batch
1	5030B	8260B	1	01/29/2011 0448	DLB		52835

Parameter	CAS Number	Analytical Method	Result	Q	PQL	MDL	Units	Run
Acetone	67-64-1	8260B	ND		20	6.7	ug/L	1
Benzene	71-43-2	8260B	0.23	J	1.0	0.13	ug/L	1
Bromodichloromethane	75-27-4	8260B	ND		1.0	0.33	ug/L	1
Bromoform	75-25-2	8260B	ND		1.0	0.66	ug/L	1
Bromomethane (Methyl bromide)	74-83-9	8260B	ND		2.0	0.80	ug/L	1
2-Butanone (MEK)	78-93-3	8260B	ND		10	2.0	ug/L	1
Carbon disulfide	75-15-0	8260B	ND		1.0	0.097	ug/L	1
Carbon tetrachloride	56-23-5	8260B	ND		1.0	0.14	ug/L	1
Chlorobenzene	108-90-7	8260B	ND		2.0	0.33	ug/L	1
Chloroethane	75-00-3	8260B	ND		2.0	0.47	ug/L	1
Chloroform	67-66-3	8260B	1.1		1.0	0.33	ug/L	1
Chloromethane (Methyl chloride)	74-87-3	8260B	ND		1.0	0.35	ug/L	1
Dibromochloromethane	124-48-1	8260B	ND		1.0	0.33	ug/L	1
1,4-Dichlorobenzene	106-46-7	8260B	ND		1.0	0.33	ug/L	1
1,3-Dichlorobenzene	541-73-1	8260B	ND		1.0	0.33	ug/L	1
1,2-Dichlorobenzene	95-50-1	8260B	ND		1.0	0.33	ug/L	1
1,2-Dichloroethane	107-06-2	8260B	ND		1.0	0.15	ug/L	1
1,1-Dichloroethane	75-34-3	8260B	ND		1.0	0.13	ug/L	1
trans-1,2-Dichloroethene	156-60-5	8260B	ND		1.0	0.21	ug/L	1
cis-1,2-Dichloroethene	156-59-2	8260B	0.28	J	1.0	0.12	ug/L	1
1,1-Dichloroethene	75-35-4	8260B	ND		1.0	0.16	ug/L	1
1,2-Dichloropropane	78-87-5	8260B	ND		1.0	0.19	ug/L	1
trans-1,3-Dichloropropene	10061-02-6	8260B	ND		1.0	0.11	ug/L	1
cis-1,3-Dichloropropene	10061-01-5	8260B	ND		1.0	0.092	ug/L	1
Ethylbenzene	100-41-4	8260B	0.43	J	1.0	0.33	ug/L	1
2-Hexanone	591-78-6	8260B	ND		10	0.27	ug/L	1
Methyl tertiary butyl ether (MTBE)	1634-04-4	8260B	ND		1.0	0.40	ug/L	1
4-Methyl-2-pentanone	108-10-1	8260B	ND		10	0.31	ug/L	1
Methylene chloride	75-09-2	8260B	ND		1.0	0.33	ug/L	1
Styrene	100-42-5	8260B	ND		1.0	0.12	ug/L	1
1,1,2,2-Tetrachloroethane	79-34-5	8260B	ND		1.0	0.16	ug/L	1
Tetrachloroethene	127-18-4	8260B	5.9		1.0	0.13	ug/L	1
Toluene	108-88-3	8260B	1.9		1.0	0.33	ug/L	1
1,2,4-Trichlorobenzene	120-82-1	8260B	ND		1.0	0.51	ug/L	1
1,1,2-Trichloroethane	79-00-5	8260B	ND		1.0	0.21	ug/L	1
1,1,1-Trichloroethane	71-55-6	8260B	ND		1.0	0.074	ug/L	1
Trichloroethene	79-01-6	8260B	3.2		1.0	0.18	ug/L	1
Vinyl chloride	75-01-4	8260B	ND		1.0	0.054	ug/L	1
Xylenes (total)	1330-20-7	8260B	1.6		1.0	0.33	ug/L	1

PQL = Practical quantitation limit
B = Detected in the method blank
E = Quantitation of compound exceeded the calibration range
ND = Not detected at or above the MDL
J = Estimated result < PQL and ≥ MDL
P = The RPD between two GC columns exceeds 40%
Where applicable, all soil sample analysis are reported on a dry weight basis unless flagged with a "W"
N = Recovery is out of criteria
H = Out of holding time

Volatile Organic Compounds by GC/MS

Client: ARCADIS U.S., Inc.
Laboratory ID: MA26019-012
Description: G4MW047
Matrix: Aqueous
Date Sampled: 01/26/2011 1435
Date Received: 01/27/2011

Surrogate	Q	Run 1 % Recovery	Acceptance Limits
1,2-Dichloroethane-d4		113	70-130
Bromofluorobenzene		113	70-130
Toluene-d8		105	70-130

PQL = Practical quantitation limit
B = Detected in the method blank
E = Quantitation of compound exceeded the calibration range
ND = Not detected at or above the MDL
J = Estimated result < PQL and ≥ MDL
P = The RPD between two GC columns exceeds 40%
Where applicable, all soil sample analysis are reported on a dry weight basis unless flagged with a "W"
N = Recovery is out of criteria
H = Out of holding time

Semivolatile Organic Compounds by GC/MS

Client: ARCADIS U.S., Inc.
Laboratory ID: MA26019-012
Description: G4MW047
Matrix: Aqueous
Date Sampled: 01/26/2011 1435
Date Received: 01/27/2011

Run	Prep Method	Analytical Method	Dilution	Analysis Date	Analyst	Prep Date	Batch
1	3520C	8270D	1	02/01/2011 2318	WD	01/28/2011 1207	51601

Parameter	CAS Number	Analytical Method	Result	Q	PQL	MDL	Units	Run
Acenaphthene	83-32-9	8270D	ND		1.0	0.091	ug/L	1
Acenaphthylene	208-96-8	8270D	ND		1.0	0.16	ug/L	1
Anthracene	120-12-7	8270D	ND		1.0	0.13	ug/L	1
Benzo(a)anthracene	56-55-3	8270D	ND		1.0	0.15	ug/L	1
Benzo(a)pyrene	50-32-8	8270D	ND		1.0	0.16	ug/L	1
Benzo(b)fluoranthene	205-99-2	8270D	ND		1.0	0.20	ug/L	1
Benzo(g,h,i)perylene	191-24-2	8270D	ND		1.0	0.23	ug/L	1
Benzo(k)fluoranthene	207-08-9	8270D	ND		1.0	0.12	ug/L	1
4-Bromophenyl phenyl ether	101-55-3	8270D	ND		1.0	0.12	ug/L	1
Butyl benzyl phthalate	85-68-7	8270D	ND		5.1	1.7	ug/L	1
Carbazole	86-74-8	8270D	ND		1.0	0.25	ug/L	1
4-Chloro-3-methyl phenol	59-50-7	8270D	ND		1.0	0.22	ug/L	1
4-Chloroaniline	106-47-8	8270D	ND		1.0	0.13	ug/L	1
bis(2-Chloroethoxy)methane	111-91-1	8270D	ND		1.0	0.13	ug/L	1
bis(2-Chloroisopropyl)ether	108-60-1	8270D	ND		1.0	0.081	ug/L	1
2-Chloronaphthalene	91-58-7	8270D	ND		1.0	0.12	ug/L	1
2-Chlorophenol	95-57-8	8270D	ND		1.0	0.13	ug/L	1
4-Chlorophenyl phenyl ether	7005-72-3	8270D	ND		1.0	0.11	ug/L	1
Chrysene	218-01-9	8270D	ND		1.0	0.12	ug/L	1
Dibenzo(a,h)anthracene	53-70-3	8270D	ND		1.0	0.13	ug/L	1
Dibenzofuran	132-64-9	8270D	ND		1.0	0.16	ug/L	1
3,3'-Dichlorobenzidine	91-94-1	8270D	ND		5.1	0.82	ug/L	1
2,4-Dichlorophenol	120-83-2	8270D	ND		1.0	0.15	ug/L	1
Diethylphthalate	84-66-2	8270D	ND		5.1	1.7	ug/L	1
Dimethyl phthalate	131-11-3	8270D	ND		5.1	1.7	ug/L	1
2,4-Dimethylphenol	105-67-9	8270D	ND		1.0	0.31	ug/L	1
Di-n-butyl phthalate	84-74-2	8270D	ND		5.1	1.7	ug/L	1
4,6-Dinitro-2-methylphenol	534-52-1	8270D	ND		5.1	1.5	ug/L	1
2,4-Dinitrophenol	51-28-5	8270D	ND		5.1	0.25	ug/L	1
2,4-Dinitrotoluene	121-14-2	8270D	ND		2.0	0.45	ug/L	1
2,6-Dinitrotoluene	606-20-2	8270D	ND		2.0	0.40	ug/L	1
Di-n-octylphthalate	117-84-0	8270D	ND		5.1	1.7	ug/L	1
bis(2-Ethylhexyl)phthalate	117-81-7	8270D	ND		5.1	1.7	ug/L	1
Fluoranthene	206-44-0	8270D	ND		1.0	0.21	ug/L	1
Fluorene	86-73-7	8270D	ND		1.0	0.10	ug/L	1
Hexachlorobenzene	118-74-1	8270D	ND		1.0	0.21	ug/L	1
Hexachlorobutadiene	87-68-3	8270D	ND		1.0	0.091	ug/L	1
Hexachlorocyclopentadiene	77-47-4	8270D	ND		5.1	0.23	ug/L	1
Hexachloroethane	67-72-1	8270D	ND		1.0	0.11	ug/L	1
Indeno(1,2,3-c,d)pyrene	193-39-5	8270D	ND		1.0	0.23	ug/L	1
Isophorone	78-59-1	8270D	ND		1.0	0.081	ug/L	1
2-Methylnaphthalene	91-57-6	8270D	ND		1.0	0.081	ug/L	1
2-Methylphenol	95-48-7	8270D	ND		1.0	0.17	ug/L	1
3 & 4-Methylphenol	106-44-5	8270D	ND		2.0	0.58	ug/L	1

PQL = Practical quantitation limit
B = Detected in the method blank
E = Quantitation of compound exceeded the calibration range
ND = Not detected at or above the MDL
J = Estimated result < PQL and ≥ MDL
P = The RPD between two GC columns exceeds 40%
Where applicable, all soil sample analysis are reported on a dry weight basis unless flagged with a "W"
N = Recovery is out of criteria
H = Out of holding time

Semivolatile Organic Compounds by GC/MS

Client: ARCADIS U.S., Inc.
Laboratory ID: MA26019-012
Description: G4MW047
Matrix: Aqueous
Date Sampled: 01/26/2011 1435
Date Received: 01/27/2011

Run	Prep Method	Analytical Method	Dilution	Analysis Date	Analyst	Prep Date	Batch
1	3520C	8270D	1	02/01/2011 2318	WD	01/28/2011 1207	51601

Parameter	CAS Number	Analytical Method	Result	Q	PQL	MDL	Units	Run
Naphthalene	91-20-3	8270D	ND		1.0	0.071	ug/L	1
2-Nitroaniline	88-74-4	8270D	ND		2.0	0.56	ug/L	1
3-Nitroaniline	99-09-2	8270D	ND		2.0	0.78	ug/L	1
4-Nitroaniline	100-01-6	8270D	ND		2.0	0.39	ug/L	1
Nitrobenzene	98-95-3	8270D	ND		1.0	0.10	ug/L	1
2-Nitrophenol	88-75-5	8270D	ND		2.0	0.27	ug/L	1
4-Nitrophenol	100-02-7	8270D	ND		5.1	0.65	ug/L	1
N-Nitrosodi-n-propylamine	621-64-7	8270D	ND		1.0	0.081	ug/L	1
N-Nitrosodiphenylamine (Diphenylamine)	86-30-6	8270D	ND		1.0	0.38	ug/L	1
Pentachlorophenol	87-86-5	8270D	ND		5.1	0.55	ug/L	1
Phenanthrene	85-01-8	8270D	ND		1.0	0.18	ug/L	1
Phenol	108-95-2	8270D	ND		1.0	0.11	ug/L	1
Pyrene	129-00-0	8270D	ND		1.0	0.16	ug/L	1
2,4,5-Trichlorophenol	95-95-4	8270D	ND		1.0	0.18	ug/L	1
2,4,6-Trichlorophenol	88-06-2	8270D	ND		1.0	0.22	ug/L	1

Surrogate	Q	Run 1 % Recovery	Acceptance Limits
2-Fluorobiphenyl		73	37-129
2-Fluorophenol		69	24-127
Nitrobenzene-d5		69	38-127
Phenol-d5		67	28-128
Terphenyl-d14		28	10-148
2,4,6-Tribromophenol		81	41-144

PQL = Practical quantitation limit
B = Detected in the method blank
E = Quantitation of compound exceeded the calibration range
ND = Not detected at or above the MDL
J = Estimated result < PQL and ≥ MDL
P = The RPD between two GC columns exceeds 40%
Where applicable, all soil sample analysis are reported on a dry weight basis unless flagged with a "W"
N = Recovery is out of criteria
H = Out of holding time

Dissolved RCRA Metals

Client: ARCADIS U.S., Inc.
Laboratory ID: MA26019-012
Description: G4MW047
Matrix: Aqueous
Date Sampled: 01/26/2011 1435
Date Received: 01/27/2011

Run	Prep Method	Analytical Method	Dilution	Analysis Date	Analyst	Prep Date	Batch
1		7470A	1	01/28/2011 1728	BNW	01/28/2011 1430	51591
1	3005A	6010C	1	01/31/2011 2139	CDF	01/28/2011 1810	51655

Parameter	CAS Number	Analytical Method	Result	Q	PQL	MDL	Units	Run
Dissolved Arsenic	7440-38-2	6010C	ND		0.010	0.0040	mg/L	1
Dissolved Barium	7440-39-3	6010C	0.064		0.025	0.0075	mg/L	1
Dissolved Cadmium	7440-43-9	6010C	ND		0.0020	0.00060	mg/L	1
Dissolved Chromium	7440-47-3	6010C	0.0023	J	0.0050	0.0021	mg/L	1
Dissolved Lead	7439-92-1	6010C	ND		0.010	0.0019	mg/L	1
Dissolved Mercury	7439-97-6	7470A	ND		0.00010	0.000053	mg/L	1
Dissolved Selenium	7782-49-2	6010C	ND		0.010	0.0026	mg/L	1
Dissolved Silver	7440-22-4	6010C	0.00095	J	0.0050	0.00040	mg/L	1

PQL = Practical quantitation limit
B = Detected in the method blank
E = Quantitation of compound exceeded the calibration range
ND = Not detected at or above the MDL
J = Estimated result < PQL and ≥ MDL
P = The RPD between two GC columns exceeds 40%
Where applicable, all soil sample analysis are reported on a dry weight basis unless flagged with a "W"
N = Recovery is out of criteria
H = Out of holding time

RCRA Metals

Client: ARCADIS U.S., Inc.
Laboratory ID: MA26019-012
Description: G4MW047
Matrix: Aqueous
Date Sampled: 01/26/2011 1435
Date Received: 01/27/2011

Run	Prep Method	Analytical Method	Dilution	Analysis Date	Analyst	Prep Date	Batch
1		7470A	1	01/28/2011 1726	BNW	01/28/2011 1430	51591
1	3005A	6010C	1	02/01/2011 0134	CDF	01/28/2011 0915	51574
2	3005A	6010C	1	02/01/2011 1432	CDF	01/28/2011 0915	51574

Parameter	CAS Number	Analytical Method	Result	Q	PQL	MDL	Units	Run
Arsenic	7440-38-2	6010C	ND		0.010	0.0040	mg/L	1
Barium	7440-39-3	6010C	0.057		0.025	0.0075	mg/L	1
Cadmium	7440-43-9	6010C	ND		0.0020	0.00060	mg/L	1
Chromium	7440-47-3	6010C	0.024		0.0050	0.0021	mg/L	1
Lead	7439-92-1	6010C	0.014		0.010	0.0019	mg/L	1
Mercury	7439-97-6	7470A	0.00019		0.00010	0.000053	mg/L	1
Selenium	7782-49-2	6010C	0.0056	J	0.010	0.0026	mg/L	2
Silver	7440-22-4	6010C	0.0012	J	0.0050	0.00040	mg/L	1

PQL = Practical quantitation limit
B = Detected in the method blank
E = Quantitation of compound exceeded the calibration range
ND = Not detected at or above the MDL
J = Estimated result < PQL and ≥ MDL
P = The RPD between two GC columns exceeds 40%
Where applicable, all soil sample analysis are reported on a dry weight basis unless flagged with a "W"
N = Recovery is out of criteria
H = Out of holding time

Inorganic non-metals

Client: ARCADIS U.S., Inc.
Laboratory ID: MA26019-013
Description: G4MW038
Matrix: Aqueous
Date Sampled: 01/26/2011 1431
Date Received: 01/27/2011

Run	Prep Method	Analytical Method	Dilution	Analysis Date	Analyst	Prep Date	Batch
1		(Alkalinity) SM 2320B	1	01/28/2011 1704	HBB		51698
1		(Chloride) 300.0	1	01/28/2011 2251	HBB		51732
1		(Nitrate - N) 353.2	1	01/27/2011 1042	SMH		51519
1		(Nitrite - N) 353.2 REV 2	1	01/27/2011 1042	SMH		51443
1		(Sulfate) 300.0	1	01/28/2011 2251	HBB		51722
1		(TOC) 5310D	1	02/04/2011 0600	HBB		52108

Parameter	CAS Number	Analytical Method	Result	Q	PQL	MDL	Units	Run
Alkalinity		SM 2320B	12		10	3.9	mg/L	1
Chloride		300.0	3.5		1.0	0.11	mg/L	1
Nitrate - N		353.2	ND		0.020	0.0013	mg/L	1
Nitrite - N		353.2 REV 2	0.067		0.020	0.0034	mg/L	1
Sulfate		300.0	5.1		1.0	0.28	mg/L	1
TOC		5310D	6.3		1.0	0.063	mg/L	1

PQL = Practical quantitation limit
B = Detected in the method blank
E = Quantitation of compound exceeded the calibration range
ND = Not detected at or above the MDL
J = Estimated result < PQL and ≥ MDL
P = The RPD between two GC columns exceeds 40%
Where applicable, all soil sample analysis are reported on a dry weight basis unless flagged with a "W"
N = Recovery is out of criteria
H = Out of holding time

Volatile Organic Compounds by GC/MS

Client: ARCADIS U.S., Inc.
Laboratory ID: MA26019-013
Description: G4MW038
Matrix: Aqueous
Date Sampled: 01/26/2011 1431
Date Received: 01/27/2011

Run	Prep Method	Analytical Method	Dilution	Analysis Date	Analyst	Prep Date	Batch
1	5030B	8260B	1	01/29/2011 0509	DLB		52835

Parameter	CAS Number	Analytical Method	Result	Q	PQL	MDL	Units	Run
Acetone	67-64-1	8260B	ND		20	6.7	ug/L	1
Benzene	71-43-2	8260B	ND		1.0	0.13	ug/L	1
Bromodichloromethane	75-27-4	8260B	ND		1.0	0.33	ug/L	1
Bromoform	75-25-2	8260B	ND		1.0	0.66	ug/L	1
Bromomethane (Methyl bromide)	74-83-9	8260B	ND		2.0	0.80	ug/L	1
2-Butanone (MEK)	78-93-3	8260B	ND		10	2.0	ug/L	1
Carbon disulfide	75-15-0	8260B	ND		1.0	0.097	ug/L	1
Carbon tetrachloride	56-23-5	8260B	ND		1.0	0.14	ug/L	1
Chlorobenzene	108-90-7	8260B	ND		2.0	0.33	ug/L	1
Chloroethane	75-00-3	8260B	ND		2.0	0.47	ug/L	1
Chloroform	67-66-3	8260B	ND		1.0	0.33	ug/L	1
Chloromethane (Methyl chloride)	74-87-3	8260B	ND		1.0	0.35	ug/L	1
Dibromochloromethane	124-48-1	8260B	ND		1.0	0.33	ug/L	1
1,4-Dichlorobenzene	106-46-7	8260B	ND		1.0	0.33	ug/L	1
1,3-Dichlorobenzene	541-73-1	8260B	ND		1.0	0.33	ug/L	1
1,2-Dichlorobenzene	95-50-1	8260B	ND		1.0	0.33	ug/L	1
1,2-Dichloroethane	107-06-2	8260B	ND		1.0	0.15	ug/L	1
1,1-Dichloroethane	75-34-3	8260B	ND		1.0	0.13	ug/L	1
trans-1,2-Dichloroethene	156-60-5	8260B	ND		1.0	0.21	ug/L	1
cis-1,2-Dichloroethene	156-59-2	8260B	ND		1.0	0.12	ug/L	1
1,1-Dichloroethene	75-35-4	8260B	ND		1.0	0.16	ug/L	1
1,2-Dichloropropane	78-87-5	8260B	ND		1.0	0.19	ug/L	1
trans-1,3-Dichloropropene	10061-02-6	8260B	ND		1.0	0.11	ug/L	1
cis-1,3-Dichloropropene	10061-01-5	8260B	ND		1.0	0.092	ug/L	1
Ethylbenzene	100-41-4	8260B	ND		1.0	0.33	ug/L	1
2-Hexanone	591-78-6	8260B	ND		10	0.27	ug/L	1
Methyl tertiary butyl ether (MTBE)	1634-04-4	8260B	ND		1.0	0.40	ug/L	1
4-Methyl-2-pentanone	108-10-1	8260B	ND		10	0.31	ug/L	1
Methylene chloride	75-09-2	8260B	ND		1.0	0.33	ug/L	1
Styrene	100-42-5	8260B	ND		1.0	0.12	ug/L	1
1,1,2,2-Tetrachloroethane	79-34-5	8260B	ND		1.0	0.16	ug/L	1
Tetrachloroethene	127-18-4	8260B	ND		1.0	0.13	ug/L	1
Toluene	108-88-3	8260B	ND		1.0	0.33	ug/L	1
1,2,4-Trichlorobenzene	120-82-1	8260B	ND		1.0	0.51	ug/L	1
1,1,2-Trichloroethane	79-00-5	8260B	ND		1.0	0.21	ug/L	1
1,1,1-Trichloroethane	71-55-6	8260B	ND		1.0	0.074	ug/L	1
Trichloroethene	79-01-6	8260B	ND		1.0	0.18	ug/L	1
Vinyl chloride	75-01-4	8260B	ND		1.0	0.054	ug/L	1
Xylenes (total)	1330-20-7	8260B	ND		1.0	0.33	ug/L	1

PQL = Practical quantitation limit
B = Detected in the method blank
E = Quantitation of compound exceeded the calibration range
ND = Not detected at or above the MDL
J = Estimated result < PQL and ≥ MDL
P = The RPD between two GC columns exceeds 40%
Where applicable, all soil sample analysis are reported on a dry weight basis unless flagged with a "W"
N = Recovery is out of criteria
H = Out of holding time

Volatile Organic Compounds by GC/MS

Client: ARCADIS U.S., Inc.
Laboratory ID: MA26019-013
Description: G4MW038
Matrix: Aqueous
Date Sampled: 01/26/2011 1431
Date Received: 01/27/2011

Surrogate	Q	Run 1 % Recovery	Acceptance Limits
1,2-Dichloroethane-d4		116	70-130
Bromofluorobenzene		115	70-130
Toluene-d8		107	70-130

PQL = Practical quantitation limit
B = Detected in the method blank
E = Quantitation of compound exceeded the calibration range
ND = Not detected at or above the MDL
J = Estimated result < PQL and ≥ MDL
P = The RPD between two GC columns exceeds 40%
Where applicable, all soil sample analysis are reported on a dry weight basis unless flagged with a "W"
N = Recovery is out of criteria
H = Out of holding time

Semivolatile Organic Compounds by GC/MS

Client: ARCADIS U.S., Inc.
Laboratory ID: MA26019-013
Description: G4MW038
Matrix: Aqueous
Date Sampled: 01/26/2011 1431
Date Received: 01/27/2011

Run	Prep Method	Analytical Method	Dilution	Analysis Date	Analyst	Prep Date	Batch
1	3520C	8270D	1	02/01/2011 2338	WD	01/28/2011 1207	51601

Parameter	CAS Number	Analytical Method	Result	Q	PQL	MDL	Units	Run
Acenaphthene	83-32-9	8270D	ND		1.0	0.091	ug/L	1
Acenaphthylene	208-96-8	8270D	ND		1.0	0.16	ug/L	1
Anthracene	120-12-7	8270D	ND		1.0	0.13	ug/L	1
Benzo(a)anthracene	56-55-3	8270D	ND		1.0	0.15	ug/L	1
Benzo(a)pyrene	50-32-8	8270D	ND		1.0	0.16	ug/L	1
Benzo(b)fluoranthene	205-99-2	8270D	ND		1.0	0.20	ug/L	1
Benzo(g,h,i)perylene	191-24-2	8270D	ND		1.0	0.23	ug/L	1
Benzo(k)fluoranthene	207-08-9	8270D	ND		1.0	0.12	ug/L	1
4-Bromophenyl phenyl ether	101-55-3	8270D	ND		1.0	0.12	ug/L	1
Butyl benzyl phthalate	85-68-7	8270D	ND		5.1	1.7	ug/L	1
Carbazole	86-74-8	8270D	ND		1.0	0.25	ug/L	1
4-Chloro-3-methyl phenol	59-50-7	8270D	ND		1.0	0.22	ug/L	1
4-Chloroaniline	106-47-8	8270D	ND		1.0	0.13	ug/L	1
bis(2-Chloroethoxy)methane	111-91-1	8270D	ND		1.0	0.13	ug/L	1
bis(2-Chloroisopropyl)ether	108-60-1	8270D	ND		1.0	0.081	ug/L	1
2-Chloronaphthalene	91-58-7	8270D	ND		1.0	0.12	ug/L	1
2-Chlorophenol	95-57-8	8270D	ND		1.0	0.13	ug/L	1
4-Chlorophenyl phenyl ether	7005-72-3	8270D	ND		1.0	0.11	ug/L	1
Chrysene	218-01-9	8270D	ND		1.0	0.12	ug/L	1
Dibenzo(a,h)anthracene	53-70-3	8270D	ND		1.0	0.13	ug/L	1
Dibenzofuran	132-64-9	8270D	ND		1.0	0.16	ug/L	1
3,3'-Dichlorobenzidine	91-94-1	8270D	ND		5.1	0.82	ug/L	1
2,4-Dichlorophenol	120-83-2	8270D	ND		1.0	0.15	ug/L	1
Diethylphthalate	84-66-2	8270D	ND		5.1	1.7	ug/L	1
Dimethyl phthalate	131-11-3	8270D	ND		5.1	1.7	ug/L	1
2,4-Dimethylphenol	105-67-9	8270D	ND		1.0	0.31	ug/L	1
Di-n-butyl phthalate	84-74-2	8270D	ND		5.1	1.7	ug/L	1
4,6-Dinitro-2-methylphenol	534-52-1	8270D	ND		5.1	1.5	ug/L	1
2,4-Dinitrophenol	51-28-5	8270D	ND		5.1	0.25	ug/L	1
2,4-Dinitrotoluene	121-14-2	8270D	ND		2.0	0.45	ug/L	1
2,6-Dinitrotoluene	606-20-2	8270D	ND		2.0	0.40	ug/L	1
Di-n-octylphthalate	117-84-0	8270D	ND		5.1	1.7	ug/L	1
bis(2-Ethylhexyl)phthalate	117-81-7	8270D	ND		5.1	1.7	ug/L	1
Fluoranthene	206-44-0	8270D	ND		1.0	0.21	ug/L	1
Fluorene	86-73-7	8270D	ND		1.0	0.10	ug/L	1
Hexachlorobenzene	118-74-1	8270D	ND		1.0	0.21	ug/L	1
Hexachlorobutadiene	87-68-3	8270D	ND		1.0	0.091	ug/L	1
Hexachlorocyclopentadiene	77-47-4	8270D	ND		5.1	0.23	ug/L	1
Hexachloroethane	67-72-1	8270D	ND		1.0	0.11	ug/L	1
Indeno(1,2,3-c,d)pyrene	193-39-5	8270D	ND		1.0	0.23	ug/L	1
Isophorone	78-59-1	8270D	ND		1.0	0.081	ug/L	1
2-Methylnaphthalene	91-57-6	8270D	ND		1.0	0.081	ug/L	1
2-Methylphenol	95-48-7	8270D	ND		1.0	0.17	ug/L	1
3 & 4-Methylphenol	106-44-5	8270D	ND		2.0	0.58	ug/L	1

PQL = Practical quantitation limit
B = Detected in the method blank
E = Quantitation of compound exceeded the calibration range
ND = Not detected at or above the MDL
J = Estimated result < PQL and ≥ MDL
P = The RPD between two GC columns exceeds 40%
Where applicable, all soil sample analysis are reported on a dry weight basis unless flagged with a "W"
N = Recovery is out of criteria
H = Out of holding time

Semivolatile Organic Compounds by GC/MS

Client: ARCADIS U.S., Inc.
Laboratory ID: MA26019-013
Description: G4MW038
Matrix: Aqueous
Date Sampled: 01/26/2011 1431
Date Received: 01/27/2011

Run	Prep Method	Analytical Method	Dilution	Analysis Date	Analyst	Prep Date	Batch
1	3520C	8270D	1	02/01/2011 2338	WD	01/28/2011 1207	51601

Parameter	CAS Number	Analytical Method	Result	Q	PQL	MDL	Units	Run
Naphthalene	91-20-3	8270D	ND		1.0	0.071	ug/L	1
2-Nitroaniline	88-74-4	8270D	ND		2.0	0.56	ug/L	1
3-Nitroaniline	99-09-2	8270D	ND		2.0	0.78	ug/L	1
4-Nitroaniline	100-01-6	8270D	ND		2.0	0.39	ug/L	1
Nitrobenzene	98-95-3	8270D	ND		1.0	0.10	ug/L	1
2-Nitrophenol	88-75-5	8270D	ND		2.0	0.27	ug/L	1
4-Nitrophenol	100-02-7	8270D	ND		5.1	0.65	ug/L	1
N-Nitrosodi-n-propylamine	621-64-7	8270D	ND		1.0	0.081	ug/L	1
N-Nitrosodiphenylamine (Diphenylamine)	86-30-6	8270D	ND		1.0	0.38	ug/L	1
Pentachlorophenol	87-86-5	8270D	ND		5.1	0.55	ug/L	1
Phenanthrene	85-01-8	8270D	ND		1.0	0.18	ug/L	1
Phenol	108-95-2	8270D	ND		1.0	0.11	ug/L	1
Pyrene	129-00-0	8270D	ND		1.0	0.16	ug/L	1
2,4,5-Trichlorophenol	95-95-4	8270D	ND		1.0	0.18	ug/L	1
2,4,6-Trichlorophenol	88-06-2	8270D	ND		1.0	0.22	ug/L	1

Surrogate	Q	Run 1 % Recovery	Acceptance Limits
2-Fluorobiphenyl		76	37-129
2-Fluorophenol		68	24-127
Nitrobenzene-d5		70	38-127
Phenol-d5		62	28-128
Terphenyl-d14		46	10-148
2,4,6-Tribromophenol		79	41-144

PQL = Practical quantitation limit
B = Detected in the method blank
E = Quantitation of compound exceeded the calibration range
ND = Not detected at or above the MDL
J = Estimated result < PQL and ≥ MDL
P = The RPD between two GC columns exceeds 40%
Where applicable, all soil sample analysis are reported on a dry weight basis unless flagged with a "W"
N = Recovery is out of criteria
H = Out of holding time

Dissolved RCRA Metals

Client: ARCADIS U.S., Inc.
Laboratory ID: MA26019-013
Description: G4MW038
Matrix: Aqueous
Date Sampled: 01/26/2011 1431
Date Received: 01/27/2011

Run	Prep Method	Analytical Method	Dilution	Analysis Date	Analyst	Prep Date	Batch
1		7470A	1	01/28/2011 1738	BNW	01/28/2011 1430	51591
1	3005A	6010C	1	01/31/2011 2146	CDF	01/28/2011 1810	51655

Parameter	CAS Number	Analytical Method	Result	Q	PQL	MDL	Units	Run
Dissolved Arsenic	7440-38-2	6010C	ND		0.010	0.0040	mg/L	1
Dissolved Barium	7440-39-3	6010C	0.035		0.025	0.0075	mg/L	1
Dissolved Cadmium	7440-43-9	6010C	ND		0.0020	0.00060	mg/L	1
Dissolved Chromium	7440-47-3	6010C	ND		0.0050	0.0021	mg/L	1
Dissolved Lead	7439-92-1	6010C	ND		0.010	0.0019	mg/L	1
Dissolved Mercury	7439-97-6	7470A	ND		0.00010	0.000053	mg/L	1
Dissolved Selenium	7782-49-2	6010C	ND		0.010	0.0026	mg/L	1
Dissolved Silver	7440-22-4	6010C	0.00063	J	0.0050	0.00040	mg/L	1

PQL = Practical quantitation limit
B = Detected in the method blank
E = Quantitation of compound exceeded the calibration range
ND = Not detected at or above the MDL
J = Estimated result < PQL and ≥ MDL
P = The RPD between two GC columns exceeds 40%
Where applicable, all soil sample analysis are reported on a dry weight basis unless flagged with a "W"
N = Recovery is out of criteria
H = Out of holding time

RCRA Metals

Client: ARCADIS U.S., Inc.
Laboratory ID: MA26019-013
Description: G4MW038
Matrix: Aqueous
Date Sampled: 01/26/2011 1431
Date Received: 01/27/2011

Run	Prep Method	Analytical Method	Dilution	Analysis Date	Analyst	Prep Date	Batch
1		7470A	1	01/28/2011 1731	BNW	01/28/2011 1430	51591
1	3005A	6010C	1	02/01/2011 0140	CDF	01/28/2011 0915	51574
2	3005A	6010C	1	02/01/2011 1439	CDF	01/28/2011 0915	51574

Parameter	CAS Number	Analytical Method	Result	Q	PQL	MDL	Units	Run
Arsenic	7440-38-2	6010C	ND		0.010	0.0040	mg/L	1
Barium	7440-39-3	6010C	0.049		0.025	0.0075	mg/L	1
Cadmium	7440-43-9	6010C	0.00073	J	0.0020	0.00060	mg/L	1
Chromium	7440-47-3	6010C	0.024		0.0050	0.0021	mg/L	1
Lead	7439-92-1	6010C	ND		0.010	0.0019	mg/L	1
Mercury	7439-97-6	7470A	0.000075	J	0.00010	0.000053	mg/L	1
Selenium	7782-49-2	6010C	0.0033	J	0.010	0.0026	mg/L	2
Silver	7440-22-4	6010C	ND		0.0050	0.00040	mg/L	1

PQL = Practical quantitation limit
B = Detected in the method blank
E = Quantitation of compound exceeded the calibration range
ND = Not detected at or above the MDL
J = Estimated result < PQL and ≥ MDL
P = The RPD between two GC columns exceeds 40%
Where applicable, all soil sample analysis are reported on a dry weight basis unless flagged with a "W"
N = Recovery is out of criteria
H = Out of holding time

Volatile Organic Compounds by GC/MS

Client: ARCADIS U.S., Inc.
Laboratory ID: MA26019-014
Description: Trip Blank
Matrix: Aqueous
Date Sampled: 01/27/2011 0835
Date Received: 01/27/2011

Run	Prep Method	Analytical Method	Dilution	Analysis Date	Analyst	Prep Date	Batch
1	5030B	8260B	1	01/28/2011 0130	DLB		51631

Parameter	CAS Number	Analytical Method	Result	Q	PQL	MDL	Units	Run
Acetone	67-64-1	8260B	ND		20	6.7	ug/L	1
Benzene	71-43-2	8260B	ND		1.0	0.13	ug/L	1
Bromodichloromethane	75-27-4	8260B	ND		1.0	0.33	ug/L	1
Bromoform	75-25-2	8260B	ND		1.0	0.66	ug/L	1
Bromomethane (Methyl bromide)	74-83-9	8260B	ND		2.0	0.80	ug/L	1
2-Butanone (MEK)	78-93-3	8260B	ND		10	2.0	ug/L	1
Carbon disulfide	75-15-0	8260B	ND		1.0	0.097	ug/L	1
Carbon tetrachloride	56-23-5	8260B	ND		1.0	0.14	ug/L	1
Chlorobenzene	108-90-7	8260B	ND		2.0	0.33	ug/L	1
Chloroethane	75-00-3	8260B	ND		2.0	0.47	ug/L	1
Chloroform	67-66-3	8260B	ND		1.0	0.33	ug/L	1
Chloromethane (Methyl chloride)	74-87-3	8260B	ND		1.0	0.35	ug/L	1
Dibromochloromethane	124-48-1	8260B	ND		1.0	0.33	ug/L	1
1,4-Dichlorobenzene	106-46-7	8260B	ND		1.0	0.33	ug/L	1
1,3-Dichlorobenzene	541-73-1	8260B	ND		1.0	0.33	ug/L	1
1,2-Dichlorobenzene	95-50-1	8260B	ND		1.0	0.33	ug/L	1
1,2-Dichloroethane	107-06-2	8260B	ND		1.0	0.15	ug/L	1
1,1-Dichloroethane	75-34-3	8260B	ND		1.0	0.13	ug/L	1
trans-1,2-Dichloroethene	156-60-5	8260B	ND		1.0	0.21	ug/L	1
cis-1,2-Dichloroethene	156-59-2	8260B	ND		1.0	0.12	ug/L	1
1,1-Dichloroethene	75-35-4	8260B	ND		1.0	0.16	ug/L	1
1,2-Dichloropropane	78-87-5	8260B	ND		1.0	0.19	ug/L	1
trans-1,3-Dichloropropene	10061-02-6	8260B	ND		1.0	0.11	ug/L	1
cis-1,3-Dichloropropene	10061-01-5	8260B	ND		1.0	0.092	ug/L	1
Ethylbenzene	100-41-4	8260B	ND		1.0	0.33	ug/L	1
2-Hexanone	591-78-6	8260B	ND		10	0.27	ug/L	1
Methyl tertiary butyl ether (MTBE)	1634-04-4	8260B	ND		1.0	0.40	ug/L	1
4-Methyl-2-pentanone	108-10-1	8260B	ND		10	0.31	ug/L	1
Methylene chloride	75-09-2	8260B	0.70	J	1.0	0.33	ug/L	1
Styrene	100-42-5	8260B	ND		1.0	0.12	ug/L	1
1,1,2,2-Tetrachloroethane	79-34-5	8260B	ND		1.0	0.16	ug/L	1
Tetrachloroethene	127-18-4	8260B	ND		1.0	0.13	ug/L	1
Toluene	108-88-3	8260B	ND		1.0	0.33	ug/L	1
1,2,4-Trichlorobenzene	120-82-1	8260B	ND		1.0	0.51	ug/L	1
1,1,2-Trichloroethane	79-00-5	8260B	ND		1.0	0.21	ug/L	1
1,1,1-Trichloroethane	71-55-6	8260B	ND		1.0	0.074	ug/L	1
Trichloroethene	79-01-6	8260B	ND		1.0	0.18	ug/L	1
Vinyl chloride	75-01-4	8260B	ND		1.0	0.054	ug/L	1
Xylenes (total)	1330-20-7	8260B	ND		1.0	0.33	ug/L	1

PQL = Practical quantitation limit
B = Detected in the method blank
E = Quantitation of compound exceeded the calibration range
ND = Not detected at or above the MDL
J = Estimated result < PQL and ≥ MDL
P = The RPD between two GC columns exceeds 40%
Where applicable, all soil sample analysis are reported on a dry weight basis unless flagged with a "W"
N = Recovery is out of criteria
H = Out of holding time

Volatile Organic Compounds by GC/MS

Client: ARCADIS U.S., Inc.
Laboratory ID: MA26019-014
Description: Trip Blank
Matrix: Aqueous
Date Sampled: 01/27/2011 0835
Date Received: 01/27/2011

Surrogate	Q	Run 1 % Recovery	Acceptance Limits
1,2-Dichloroethane-d4		101	70-130
Bromofluorobenzene		108	70-130
Toluene-d8		103	70-130

PQL = Practical quantitation limit
B = Detected in the method blank
E = Quantitation of compound exceeded the calibration range
ND = Not detected at or above the MDL
J = Estimated result < PQL and ≥ MDL
P = The RPD between two GC columns exceeds 40%
Where applicable, all soil sample analysis are reported on a dry weight basis unless flagged with a "W"
N = Recovery is out of criteria
H = Out of holding time

Volatile Organic Compounds by GC/MS

Client: ARCADIS U.S., Inc.
Laboratory ID: MA26019-015
Description: G4MW023
Matrix: Aqueous
Date Sampled: 01/27/2011 0915
Date Received: 01/29/2011

Run	Prep Method	Analytical Method	Dilution	Analysis Date	Analyst	Prep Date	Batch
1	5030B	8260B	1	02/01/2011 0242	DLB		52836

Parameter	CAS Number	Analytical Method	Result	Q	PQL	MDL	Units	Run
Acetone	67-64-1	8260B	ND		20	6.7	ug/L	1
Benzene	71-43-2	8260B	ND		1.0	0.13	ug/L	1
Bromodichloromethane	75-27-4	8260B	ND		1.0	0.33	ug/L	1
Bromoform	75-25-2	8260B	ND		1.0	0.66	ug/L	1
Bromomethane (Methyl bromide)	74-83-9	8260B	ND		2.0	0.80	ug/L	1
2-Butanone (MEK)	78-93-3	8260B	ND		10	2.0	ug/L	1
Carbon disulfide	75-15-0	8260B	ND		1.0	0.097	ug/L	1
Carbon tetrachloride	56-23-5	8260B	ND		1.0	0.14	ug/L	1
Chlorobenzene	108-90-7	8260B	ND		2.0	0.33	ug/L	1
Chloroethane	75-00-3	8260B	ND		2.0	0.47	ug/L	1
Chloroform	67-66-3	8260B	ND		1.0	0.33	ug/L	1
Chloromethane (Methyl chloride)	74-87-3	8260B	ND		1.0	0.35	ug/L	1
Dibromochloromethane	124-48-1	8260B	ND		1.0	0.33	ug/L	1
1,4-Dichlorobenzene	106-46-7	8260B	ND		1.0	0.33	ug/L	1
1,3-Dichlorobenzene	541-73-1	8260B	ND		1.0	0.33	ug/L	1
1,2-Dichlorobenzene	95-50-1	8260B	ND		1.0	0.33	ug/L	1
1,2-Dichloroethane	107-06-2	8260B	ND		1.0	0.15	ug/L	1
1,1-Dichloroethane	75-34-3	8260B	ND		1.0	0.13	ug/L	1
trans-1,2-Dichloroethene	156-60-5	8260B	0.31	J	1.0	0.21	ug/L	1
cis-1,2-Dichloroethene	156-59-2	8260B	0.93	J	1.0	0.12	ug/L	1
1,1-Dichloroethene	75-35-4	8260B	ND		1.0	0.16	ug/L	1
1,2-Dichloropropane	78-87-5	8260B	ND		1.0	0.19	ug/L	1
trans-1,3-Dichloropropene	10061-02-6	8260B	ND		1.0	0.11	ug/L	1
cis-1,3-Dichloropropene	10061-01-5	8260B	ND		1.0	0.092	ug/L	1
Ethylbenzene	100-41-4	8260B	ND		1.0	0.33	ug/L	1
2-Hexanone	591-78-6	8260B	ND		10	0.27	ug/L	1
Methyl tertiary butyl ether (MTBE)	1634-04-4	8260B	ND		1.0	0.40	ug/L	1
4-Methyl-2-pentanone	108-10-1	8260B	ND		10	0.31	ug/L	1
Methylene chloride	75-09-2	8260B	ND		1.0	0.33	ug/L	1
Styrene	100-42-5	8260B	ND		1.0	0.12	ug/L	1
1,1,2,2-Tetrachloroethane	79-34-5	8260B	ND		1.0	0.16	ug/L	1
Tetrachloroethene	127-18-4	8260B	ND		1.0	0.13	ug/L	1
Toluene	108-88-3	8260B	ND		1.0	0.33	ug/L	1
1,2,4-Trichlorobenzene	120-82-1	8260B	ND		1.0	0.51	ug/L	1
1,1,2-Trichloroethane	79-00-5	8260B	ND		1.0	0.21	ug/L	1
1,1,1-Trichloroethane	71-55-6	8260B	ND		1.0	0.074	ug/L	1
Trichloroethene	79-01-6	8260B	1.4		1.0	0.18	ug/L	1
Vinyl chloride	75-01-4	8260B	ND		1.0	0.054	ug/L	1
Xylenes (total)	1330-20-7	8260B	ND		1.0	0.33	ug/L	1

PQL = Practical quantitation limit
B = Detected in the method blank
E = Quantitation of compound exceeded the calibration range
ND = Not detected at or above the MDL
J = Estimated result < PQL and ≥ MDL
P = The RPD between two GC columns exceeds 40%
Where applicable, all soil sample analysis are reported on a dry weight basis unless flagged with a "W"
N = Recovery is out of criteria
H = Out of holding time

Volatile Organic Compounds by GC/MS

Client: ARCADIS U.S., Inc.
Laboratory ID: MA26019-015
Description: G4MW023
Matrix: Aqueous
Date Sampled: 01/27/2011 0915
Date Received: 01/29/2011

Surrogate	Q	Run 1 % Recovery	Acceptance Limits
1,2-Dichloroethane-d4		83	70-130
Bromofluorobenzene		89	70-130
Toluene-d8		92	70-130

PQL = Practical quantitation limit
B = Detected in the method blank
E = Quantitation of compound exceeded the calibration range
ND = Not detected at or above the MDL
J = Estimated result < PQL and ≥ MDL
P = The RPD between two GC columns exceeds 40%
Where applicable, all soil sample analysis are reported on a dry weight basis unless flagged with a "W"
N = Recovery is out of criteria
H = Out of holding time

Semivolatile Organic Compounds by GC/MS

Client: ARCADIS U.S., Inc.
Laboratory ID: MA26019-015
Description: G4MW023
Matrix: Aqueous
Date Sampled: 01/27/2011 0915
Date Received: 01/29/2011

Run	Prep Method	Analytical Method	Dilution	Analysis Date	Analyst	Prep Date	Batch
1	3520C	8270D	1	02/02/2011 2027	JGH	01/31/2011 1400	51711

Parameter	CAS Number	Analytical Method	Result	Q	PQL	MDL	Units	Run
Acenaphthene	83-32-9	8270D	ND		1.0	0.091	ug/L	1
Acenaphthylene	208-96-8	8270D	ND		1.0	0.16	ug/L	1
Anthracene	120-12-7	8270D	ND		1.0	0.13	ug/L	1
Benzo(a)anthracene	56-55-3	8270D	ND		1.0	0.15	ug/L	1
Benzo(a)pyrene	50-32-8	8270D	ND		1.0	0.16	ug/L	1
Benzo(b)fluoranthene	205-99-2	8270D	ND		1.0	0.20	ug/L	1
Benzo(g,h,i)perylene	191-24-2	8270D	ND		1.0	0.23	ug/L	1
Benzo(k)fluoranthene	207-08-9	8270D	ND		1.0	0.12	ug/L	1
4-Bromophenyl phenyl ether	101-55-3	8270D	ND		1.0	0.12	ug/L	1
Butyl benzyl phthalate	85-68-7	8270D	ND		5.1	1.7	ug/L	1
Carbazole	86-74-8	8270D	ND		1.0	0.25	ug/L	1
4-Chloro-3-methyl phenol	59-50-7	8270D	ND		1.0	0.22	ug/L	1
4-Chloroaniline	106-47-8	8270D	ND		1.0	0.13	ug/L	1
bis(2-Chloroethoxy)methane	111-91-1	8270D	ND		1.0	0.13	ug/L	1
bis(2-Chloroisopropyl)ether	108-60-1	8270D	ND		1.0	0.081	ug/L	1
2-Chloronaphthalene	91-58-7	8270D	ND		1.0	0.12	ug/L	1
2-Chlorophenol	95-57-8	8270D	ND		1.0	0.13	ug/L	1
4-Chlorophenyl phenyl ether	7005-72-3	8270D	ND		1.0	0.11	ug/L	1
Chrysene	218-01-9	8270D	ND		1.0	0.12	ug/L	1
Dibenzo(a,h)anthracene	53-70-3	8270D	ND		1.0	0.13	ug/L	1
Dibenzofuran	132-64-9	8270D	ND		1.0	0.16	ug/L	1
3,3'-Dichlorobenzidine	91-94-1	8270D	ND		5.1	0.82	ug/L	1
2,4-Dichlorophenol	120-83-2	8270D	ND		1.0	0.15	ug/L	1
Diethylphthalate	84-66-2	8270D	ND		5.1	1.7	ug/L	1
Dimethyl phthalate	131-11-3	8270D	ND		5.1	1.7	ug/L	1
2,4-Dimethylphenol	105-67-9	8270D	ND		1.0	0.31	ug/L	1
Di-n-butyl phthalate	84-74-2	8270D	ND		5.1	1.7	ug/L	1
4,6-Dinitro-2-methylphenol	534-52-1	8270D	ND		5.1	1.5	ug/L	1
2,4-Dinitrophenol	51-28-5	8270D	ND		5.1	0.25	ug/L	1
2,4-Dinitrotoluene	121-14-2	8270D	ND		2.0	0.45	ug/L	1
2,6-Dinitrotoluene	606-20-2	8270D	ND		2.0	0.40	ug/L	1
Di-n-octylphthalate	117-84-0	8270D	ND		5.1	1.7	ug/L	1
bis(2-Ethylhexyl)phthalate	117-81-7	8270D	ND		5.1	1.7	ug/L	1
Fluoranthene	206-44-0	8270D	ND		1.0	0.21	ug/L	1
Fluorene	86-73-7	8270D	ND		1.0	0.10	ug/L	1
Hexachlorobenzene	118-74-1	8270D	ND		1.0	0.21	ug/L	1
Hexachlorobutadiene	87-68-3	8270D	ND		1.0	0.091	ug/L	1
Hexachlorocyclopentadiene	77-47-4	8270D	ND		5.1	0.23	ug/L	1
Hexachloroethane	67-72-1	8270D	ND		1.0	0.11	ug/L	1
Indeno(1,2,3-c,d)pyrene	193-39-5	8270D	ND		1.0	0.23	ug/L	1
Isophorone	78-59-1	8270D	ND		1.0	0.081	ug/L	1
2-Methylnaphthalene	91-57-6	8270D	ND		1.0	0.081	ug/L	1
2-Methylphenol	95-48-7	8270D	ND		1.0	0.17	ug/L	1
3 & 4-Methylphenol	106-44-5	8270D	ND		2.0	0.58	ug/L	1

PQL = Practical quantitation limit
B = Detected in the method blank
E = Quantitation of compound exceeded the calibration range
ND = Not detected at or above the MDL
J = Estimated result < PQL and ≥ MDL
P = The RPD between two GC columns exceeds 40%
Where applicable, all soil sample analysis are reported on a dry weight basis unless flagged with a "W"
N = Recovery is out of criteria
H = Out of holding time

Semivolatile Organic Compounds by GC/MS

Client: ARCADIS U.S., Inc.
Laboratory ID: MA26019-015
Description: G4MW023
Matrix: Aqueous
Date Sampled: 01/27/2011 0915
Date Received: 01/29/2011

Run	Prep Method	Analytical Method	Dilution	Analysis Date	Analyst	Prep Date	Batch
1	3520C	8270D	1	02/02/2011 2027	JGH	01/31/2011 1400	51711

Parameter	CAS Number	Analytical Method	Result	Q	PQL	MDL	Units	Run
Naphthalene	91-20-3	8270D	ND		1.0	0.071	ug/L	1
2-Nitroaniline	88-74-4	8270D	ND		2.0	0.56	ug/L	1
3-Nitroaniline	99-09-2	8270D	ND		2.0	0.78	ug/L	1
4-Nitroaniline	100-01-6	8270D	ND		2.0	0.39	ug/L	1
Nitrobenzene	98-95-3	8270D	ND		1.0	0.10	ug/L	1
2-Nitrophenol	88-75-5	8270D	ND		2.0	0.27	ug/L	1
4-Nitrophenol	100-02-7	8270D	ND		5.1	0.65	ug/L	1
N-Nitrosodi-n-propylamine	621-64-7	8270D	ND		1.0	0.081	ug/L	1
N-Nitrosodiphenylamine (Diphenylamine)	86-30-6	8270D	ND		1.0	0.38	ug/L	1
Pentachlorophenol	87-86-5	8270D	ND		5.1	0.55	ug/L	1
Phenanthrene	85-01-8	8270D	ND		1.0	0.18	ug/L	1
Phenol	108-95-2	8270D	ND		1.0	0.11	ug/L	1
Pyrene	129-00-0	8270D	ND		1.0	0.16	ug/L	1
2,4,5-Trichlorophenol	95-95-4	8270D	ND		1.0	0.18	ug/L	1
2,4,6-Trichlorophenol	88-06-2	8270D	ND		1.0	0.22	ug/L	1

Surrogate	Q	Run 1 % Recovery	Acceptance Limits
2-Fluorobiphenyl		40	37-129
2-Fluorophenol		64	24-127
Nitrobenzene-d5		53	38-127
Phenol-d5		51	28-128
Terphenyl-d14		30	10-148
2,4,6-Tribromophenol		63	41-144

PQL = Practical quantitation limit
B = Detected in the method blank
E = Quantitation of compound exceeded the calibration range
ND = Not detected at or above the MDL
J = Estimated result < PQL and ≥ MDL
P = The RPD between two GC columns exceeds 40%
Where applicable, all soil sample analysis are reported on a dry weight basis unless flagged with a "W"
N = Recovery is out of criteria
H = Out of holding time

Dissolved RCRA Metals

Client: ARCADIS U.S., Inc.
Laboratory ID: MA26019-015
Description: G4MW023
Matrix: Aqueous
Date Sampled: 01/27/2011 0915
Date Received: 01/29/2011

Run	Prep Method	Analytical Method	Dilution	Analysis Date	Analyst	Prep Date	Batch
1		7470A	1	02/01/2011 1330	BNW	02/01/2011 1020	51804
1	3005A	6010C	1	02/01/2011 2206	CDF	01/31/2011 1050	51695

Parameter	CAS Number	Analytical Method	Result	Q	PQL	MDL	Units	Run
Dissolved Arsenic	7440-38-2	6010C	0.0041	J	0.010	0.0040	mg/L	1
Dissolved Barium	7440-39-3	6010C	0.018	J	0.025	0.0075	mg/L	1
Dissolved Cadmium	7440-43-9	6010C	ND		0.0020	0.00060	mg/L	1
Dissolved Chromium	7440-47-3	6010C	ND		0.0050	0.0021	mg/L	1
Dissolved Lead	7439-92-1	6010C	ND		0.010	0.0019	mg/L	1
Dissolved Mercury	7439-97-6	7470A	ND		0.00010	0.000053	mg/L	1
Dissolved Selenium	7782-49-2	6010C	ND		0.010	0.0026	mg/L	1
Dissolved Silver	7440-22-4	6010C	0.0012	J	0.0050	0.00040	mg/L	1

PQL = Practical quantitation limit
B = Detected in the method blank
E = Quantitation of compound exceeded the calibration range
ND = Not detected at or above the MDL
J = Estimated result < PQL and ≥ MDL
P = The RPD between two GC columns exceeds 40%
Where applicable, all soil sample analysis are reported on a dry weight basis unless flagged with a "W"
N = Recovery is out of criteria
H = Out of holding time

RCRA Metals

Client: ARCADIS U.S., Inc.
Laboratory ID: MA26019-015
Description: G4MW023
Matrix: Aqueous
Date Sampled: 01/27/2011 0915
Date Received: 01/29/2011

Run	Prep Method	Analytical Method	Dilution	Analysis Date	Analyst	Prep Date	Batch
1		7470A	1	02/01/2011 1320	BNW	02/01/2011 1020	51804
1	3005A	6010C	1	02/01/2011 2147	CDF	01/31/2011 1050	51695

Parameter	CAS Number	Analytical Method	Result	Q	PQL	MDL	Units	Run
Arsenic	7440-38-2	6010C	0.0074	J	0.010	0.0040	mg/L	1
Barium	7440-39-3	6010C	0.022	J	0.025	0.0075	mg/L	1
Cadmium	7440-43-9	6010C	ND		0.0020	0.00060	mg/L	1
Chromium	7440-47-3	6010C	0.0053		0.0050	0.0021	mg/L	1
Lead	7439-92-1	6010C	ND		0.010	0.0019	mg/L	1
Mercury	7439-97-6	7470A	0.000072	J	0.00010	0.000053	mg/L	1
Selenium	7782-49-2	6010C	ND		0.010	0.0026	mg/L	1
Silver	7440-22-4	6010C	ND		0.0050	0.00040	mg/L	1

PQL = Practical quantitation limit
B = Detected in the method blank
E = Quantitation of compound exceeded the calibration range
ND = Not detected at or above the MDL
J = Estimated result < PQL and ≥ MDL
P = The RPD between two GC columns exceeds 40%
Where applicable, all soil sample analysis are reported on a dry weight basis unless flagged with a "W"
N = Recovery is out of criteria
H = Out of holding time

Volatile Organic Compounds by GC/MS

Client: ARCADIS U.S., Inc.
Laboratory ID: MA26019-016
Description: G4MW044
Matrix: Aqueous
Date Sampled: 01/26/2011 1630
Date Received: 01/29/2011

Run	Prep Method	Analytical Method	Dilution	Analysis Date	Analyst	Prep Date	Batch
1	5030B	8260B	1	02/01/2011 0304	DLB		52836

Parameter	CAS Number	Analytical Method	Result	Q	PQL	MDL	Units	Run
Acetone	67-64-1	8260B	ND		20	6.7	ug/L	1
Benzene	71-43-2	8260B	ND		1.0	0.13	ug/L	1
Bromodichloromethane	75-27-4	8260B	ND		1.0	0.33	ug/L	1
Bromoform	75-25-2	8260B	ND		1.0	0.66	ug/L	1
Bromomethane (Methyl bromide)	74-83-9	8260B	ND		2.0	0.80	ug/L	1
2-Butanone (MEK)	78-93-3	8260B	ND		10	2.0	ug/L	1
Carbon disulfide	75-15-0	8260B	ND		1.0	0.097	ug/L	1
Carbon tetrachloride	56-23-5	8260B	ND		1.0	0.14	ug/L	1
Chlorobenzene	108-90-7	8260B	ND		2.0	0.33	ug/L	1
Chloroethane	75-00-3	8260B	ND		2.0	0.47	ug/L	1
Chloroform	67-66-3	8260B	ND		1.0	0.33	ug/L	1
Chloromethane (Methyl chloride)	74-87-3	8260B	ND		1.0	0.35	ug/L	1
Dibromochloromethane	124-48-1	8260B	ND		1.0	0.33	ug/L	1
1,4-Dichlorobenzene	106-46-7	8260B	ND		1.0	0.33	ug/L	1
1,3-Dichlorobenzene	541-73-1	8260B	ND		1.0	0.33	ug/L	1
1,2-Dichlorobenzene	95-50-1	8260B	ND		1.0	0.33	ug/L	1
1,2-Dichloroethane	107-06-2	8260B	ND		1.0	0.15	ug/L	1
1,1-Dichloroethane	75-34-3	8260B	ND		1.0	0.13	ug/L	1
trans-1,2-Dichloroethene	156-60-5	8260B	ND		1.0	0.21	ug/L	1
cis-1,2-Dichloroethene	156-59-2	8260B	0.93	J	1.0	0.12	ug/L	1
1,1-Dichloroethene	75-35-4	8260B	ND		1.0	0.16	ug/L	1
1,2-Dichloropropane	78-87-5	8260B	ND		1.0	0.19	ug/L	1
trans-1,3-Dichloropropene	10061-02-6	8260B	ND		1.0	0.11	ug/L	1
cis-1,3-Dichloropropene	10061-01-5	8260B	ND		1.0	0.092	ug/L	1
Ethylbenzene	100-41-4	8260B	ND		1.0	0.33	ug/L	1
2-Hexanone	591-78-6	8260B	ND		10	0.27	ug/L	1
Methyl tertiary butyl ether (MTBE)	1634-04-4	8260B	ND		1.0	0.40	ug/L	1
4-Methyl-2-pentanone	108-10-1	8260B	ND		10	0.31	ug/L	1
Methylene chloride	75-09-2	8260B	ND		1.0	0.33	ug/L	1
Styrene	100-42-5	8260B	ND		1.0	0.12	ug/L	1
1,1,2,2-Tetrachloroethane	79-34-5	8260B	ND		1.0	0.16	ug/L	1
Tetrachloroethene	127-18-4	8260B	ND		1.0	0.13	ug/L	1
Toluene	108-88-3	8260B	ND		1.0	0.33	ug/L	1
1,2,4-Trichlorobenzene	120-82-1	8260B	ND		1.0	0.51	ug/L	1
1,1,2-Trichloroethane	79-00-5	8260B	ND		1.0	0.21	ug/L	1
1,1,1-Trichloroethane	71-55-6	8260B	ND		1.0	0.074	ug/L	1
Trichloroethene	79-01-6	8260B	4.9		1.0	0.18	ug/L	1
Vinyl chloride	75-01-4	8260B	ND		1.0	0.054	ug/L	1
Xylenes (total)	1330-20-7	8260B	ND		1.0	0.33	ug/L	1

PQL = Practical quantitation limit
B = Detected in the method blank
E = Quantitation of compound exceeded the calibration range
ND = Not detected at or above the MDL
J = Estimated result < PQL and ≥ MDL
P = The RPD between two GC columns exceeds 40%
Where applicable, all soil sample analysis are reported on a dry weight basis unless flagged with a "W"
N = Recovery is out of criteria
H = Out of holding time

Volatile Organic Compounds by GC/MS

Client: ARCADIS U.S., Inc.
Laboratory ID: MA26019-016
Description: G4MW044
Matrix: Aqueous
Date Sampled: 01/26/2011 1630
Date Received: 01/29/2011

Surrogate	Q	Run 1 % Recovery	Acceptance Limits
1,2-Dichloroethane-d4		77	70-130
Bromofluorobenzene		89	70-130
Toluene-d8		92	70-130

PQL = Practical quantitation limit
B = Detected in the method blank
E = Quantitation of compound exceeded the calibration range
ND = Not detected at or above the MDL
J = Estimated result < PQL and ≥ MDL
P = The RPD between two GC columns exceeds 40%
Where applicable, all soil sample analysis are reported on a dry weight basis unless flagged with a "W"
N = Recovery is out of criteria
H = Out of holding time

Semivolatile Organic Compounds by GC/MS

Client: ARCADIS U.S., Inc.
Laboratory ID: MA26019-016
Description: G4MW044
Matrix: Aqueous
Date Sampled: 01/26/2011 1630
Date Received: 01/29/2011

Run	Prep Method	Analytical Method	Dilution	Analysis Date	Analyst	Prep Date	Batch
1	3520C	8270D	1	02/02/2011 1512	JGH	01/31/2011 1400	51711

Parameter	CAS Number	Analytical Method	Result	Q	PQL	MDL	Units	Run
Acenaphthene	83-32-9	8270D	ND		1.0	0.090	ug/L	1
Acenaphthylene	208-96-8	8270D	ND		1.0	0.16	ug/L	1
Anthracene	120-12-7	8270D	ND		1.0	0.13	ug/L	1
Benzo(a)anthracene	56-55-3	8270D	ND		1.0	0.15	ug/L	1
Benzo(a)pyrene	50-32-8	8270D	ND		1.0	0.16	ug/L	1
Benzo(b)fluoranthene	205-99-2	8270D	ND		1.0	0.20	ug/L	1
Benzo(g,h,i)perylene	191-24-2	8270D	ND		1.0	0.23	ug/L	1
Benzo(k)fluoranthene	207-08-9	8270D	ND		1.0	0.12	ug/L	1
4-Bromophenyl phenyl ether	101-55-3	8270D	ND		1.0	0.12	ug/L	1
Butyl benzyl phthalate	85-68-7	8270D	ND		5.0	1.7	ug/L	1
Carbazole	86-74-8	8270D	ND		1.0	0.25	ug/L	1
4-Chloro-3-methyl phenol	59-50-7	8270D	ND		1.0	0.22	ug/L	1
4-Chloroaniline	106-47-8	8270D	ND		1.0	0.13	ug/L	1
bis(2-Chloroethoxy)methane	111-91-1	8270D	ND		1.0	0.13	ug/L	1
bis(2-Chloroisopropyl)ether	108-60-1	8270D	ND		1.0	0.080	ug/L	1
2-Chloronaphthalene	91-58-7	8270D	ND		1.0	0.12	ug/L	1
2-Chlorophenol	95-57-8	8270D	ND		1.0	0.13	ug/L	1
4-Chlorophenyl phenyl ether	7005-72-3	8270D	ND		1.0	0.11	ug/L	1
Chrysene	218-01-9	8270D	ND		1.0	0.12	ug/L	1
Dibenzo(a,h)anthracene	53-70-3	8270D	ND		1.0	0.13	ug/L	1
Dibenzofuran	132-64-9	8270D	ND		1.0	0.16	ug/L	1
3,3'-Dichlorobenzidine	91-94-1	8270D	ND		5.0	0.81	ug/L	1
2,4-Dichlorophenol	120-83-2	8270D	ND		1.0	0.15	ug/L	1
Diethylphthalate	84-66-2	8270D	ND		5.0	1.7	ug/L	1
Dimethyl phthalate	131-11-3	8270D	ND		5.0	1.7	ug/L	1
2,4-Dimethylphenol	105-67-9	8270D	ND		1.0	0.31	ug/L	1
Di-n-butyl phthalate	84-74-2	8270D	ND		5.0	1.7	ug/L	1
4,6-Dinitro-2-methylphenol	534-52-1	8270D	ND		5.0	1.5	ug/L	1
2,4-Dinitrophenol	51-28-5	8270D	ND		5.0	0.25	ug/L	1
2,4-Dinitrotoluene	121-14-2	8270D	ND		2.0	0.45	ug/L	1
2,6-Dinitrotoluene	606-20-2	8270D	ND		2.0	0.40	ug/L	1
Di-n-octylphthalate	117-84-0	8270D	ND		5.0	1.7	ug/L	1
bis(2-Ethylhexyl)phthalate	117-81-7	8270D	ND		5.0	1.7	ug/L	1
Fluoranthene	206-44-0	8270D	ND		1.0	0.21	ug/L	1
Fluorene	86-73-7	8270D	ND		1.0	0.10	ug/L	1
Hexachlorobenzene	118-74-1	8270D	ND		1.0	0.21	ug/L	1
Hexachlorobutadiene	87-68-3	8270D	ND		1.0	0.090	ug/L	1
Hexachlorocyclopentadiene	77-47-4	8270D	ND		5.0	0.23	ug/L	1
Hexachloroethane	67-72-1	8270D	ND		1.0	0.11	ug/L	1
Indeno(1,2,3-c,d)pyrene	193-39-5	8270D	ND		1.0	0.23	ug/L	1
Isophorone	78-59-1	8270D	ND		1.0	0.080	ug/L	1
2-Methylnaphthalene	91-57-6	8270D	ND		1.0	0.080	ug/L	1
2-Methylphenol	95-48-7	8270D	ND		1.0	0.17	ug/L	1
3 & 4-Methylphenol	106-44-5	8270D	ND		2.0	0.57	ug/L	1

PQL = Practical quantitation limit
B = Detected in the method blank
E = Quantitation of compound exceeded the calibration range
ND = Not detected at or above the MDL
J = Estimated result < PQL and ≥ MDL
P = The RPD between two GC columns exceeds 40%
Where applicable, all soil sample analysis are reported on a dry weight basis unless flagged with a "W"
N = Recovery is out of criteria
H = Out of holding time

Semivolatile Organic Compounds by GC/MS

Client: ARCADIS U.S., Inc.
Laboratory ID: MA26019-016
Description: G4MW044
Matrix: Aqueous
Date Sampled: 01/26/2011 1630
Date Received: 01/29/2011

Run	Prep Method	Analytical Method	Dilution	Analysis Date	Analyst	Prep Date	Batch
1	3520C	8270D	1	02/02/2011 1512	JGH	01/31/2011 1400	51711

Parameter	CAS Number	Analytical Method	Result	Q	PQL	MDL	Units	Run
Naphthalene	91-20-3	8270D	ND		1.0	0.070	ug/L	1
2-Nitroaniline	88-74-4	8270D	ND		2.0	0.55	ug/L	1
3-Nitroaniline	99-09-2	8270D	ND		2.0	0.77	ug/L	1
4-Nitroaniline	100-01-6	8270D	ND		2.0	0.39	ug/L	1
Nitrobenzene	98-95-3	8270D	ND		1.0	0.10	ug/L	1
2-Nitrophenol	88-75-5	8270D	ND		2.0	0.27	ug/L	1
4-Nitrophenol	100-02-7	8270D	ND		5.0	0.64	ug/L	1
N-Nitrosodi-n-propylamine	621-64-7	8270D	ND		1.0	0.080	ug/L	1
N-Nitrosodiphenylamine (Diphenylamine)	86-30-6	8270D	ND		1.0	0.38	ug/L	1
Pentachlorophenol	87-86-5	8270D	ND		5.0	0.54	ug/L	1
Phenanthrene	85-01-8	8270D	ND		1.0	0.18	ug/L	1
Phenol	108-95-2	8270D	ND		1.0	0.11	ug/L	1
Pyrene	129-00-0	8270D	ND		1.0	0.16	ug/L	1
2,4,5-Trichlorophenol	95-95-4	8270D	ND		1.0	0.18	ug/L	1
2,4,6-Trichlorophenol	88-06-2	8270D	ND		1.0	0.22	ug/L	1

Surrogate	Q	Run 1 % Recovery	Acceptance Limits
2-Fluorobiphenyl		53	37-129
2-Fluorophenol		56	24-127
Nitrobenzene-d5		54	38-127
Phenol-d5		56	28-128
Terphenyl-d14		61	10-148
2,4,6-Tribromophenol		72	41-144

PQL = Practical quantitation limit
B = Detected in the method blank
E = Quantitation of compound exceeded the calibration range
ND = Not detected at or above the MDL
J = Estimated result < PQL and ≥ MDL
P = The RPD between two GC columns exceeds 40%
Where applicable, all soil sample analysis are reported on a dry weight basis unless flagged with a "W"
N = Recovery is out of criteria
H = Out of holding time

Dissolved RCRA Metals

Client: ARCADIS U.S., Inc.
Laboratory ID: MA26019-016
Description: G4MW044
Matrix: Aqueous
Date Sampled: 01/26/2011 1630
Date Received: 01/29/2011

Run	Prep Method	Analytical Method	Dilution	Analysis Date	Analyst	Prep Date	Batch
1		7470A	1	02/01/2011 1340	BNW	02/01/2011 1020	51804
1	3005A	6010C	1	02/01/2011 2222	CDF	01/31/2011 1050	51695

Parameter	CAS Number	Analytical Method	Result	Q	PQL	MDL	Units	Run
Dissolved Arsenic	7440-38-2	6010C	ND		0.010	0.0040	mg/L	1
Dissolved Barium	7440-39-3	6010C	0.090		0.025	0.0075	mg/L	1
Dissolved Cadmium	7440-43-9	6010C	ND		0.0020	0.00060	mg/L	1
Dissolved Chromium	7440-47-3	6010C	ND		0.0050	0.0021	mg/L	1
Dissolved Lead	7439-92-1	6010C	0.0025	J	0.010	0.0019	mg/L	1
Dissolved Mercury	7439-97-6	7470A	0.000060	J	0.00010	0.000053	mg/L	1
Dissolved Selenium	7782-49-2	6010C	ND		0.010	0.0026	mg/L	1
Dissolved Silver	7440-22-4	6010C	ND		0.0050	0.00040	mg/L	1

PQL = Practical quantitation limit
B = Detected in the method blank
E = Quantitation of compound exceeded the calibration range
ND = Not detected at or above the MDL
J = Estimated result < PQL and ≥ MDL
P = The RPD between two GC columns exceeds 40%
Where applicable, all soil sample analysis are reported on a dry weight basis unless flagged with a "W"
N = Recovery is out of criteria
H = Out of holding time

RCRA Metals

Client: ARCADIS U.S., Inc.
Laboratory ID: MA26019-016
Description: G4MW044
Matrix: Aqueous
Date Sampled: 01/26/2011 1630
Date Received: 01/29/2011

Run	Prep Method	Analytical Method	Dilution	Analysis Date	Analyst	Prep Date	Batch
1		7470A	1	02/01/2011 1333	BNW	02/01/2011 1020	51804
1	3005A	6010C	1	02/01/2011 2210	CDF	01/31/2011 1050	51695

Parameter	CAS Number	Analytical Method	Result	Q	PQL	MDL	Units	Run
Arsenic	7440-38-2	6010C	ND		0.010	0.0040	mg/L	1
Barium	7440-39-3	6010C	0.083		0.025	0.0075	mg/L	1
Cadmium	7440-43-9	6010C	ND		0.0020	0.00060	mg/L	1
Chromium	7440-47-3	6010C	0.0041	J	0.0050	0.0021	mg/L	1
Lead	7439-92-1	6010C	ND		0.010	0.0019	mg/L	1
Mercury	7439-97-6	7470A	ND		0.00010	0.000053	mg/L	1
Selenium	7782-49-2	6010C	ND		0.010	0.0026	mg/L	1
Silver	7440-22-4	6010C	ND		0.0050	0.00040	mg/L	1

PQL = Practical quantitation limit
B = Detected in the method blank
E = Quantitation of compound exceeded the calibration range
ND = Not detected at or above the MDL
J = Estimated result < PQL and ≥ MDL
P = The RPD between two GC columns exceeds 40%
Where applicable, all soil sample analysis are reported on a dry weight basis unless flagged with a "W"
N = Recovery is out of criteria
H = Out of holding time

Volatile Organic Compounds by GC/MS

Client: ARCADIS U.S., Inc.
Laboratory ID: MA26019-017
Description: G4MW045
Matrix: Aqueous
Date Sampled: 01/26/2011 1715
Date Received: 01/29/2011

Run	Prep Method	Analytical Method	Dilution	Analysis Date	Analyst	Prep Date	Batch
1	5030B	8260B	1	02/01/2011 0326	DLB		52836

Parameter	CAS Number	Analytical Method	Result	Q	PQL	MDL	Units	Run
Acetone	67-64-1	8260B	ND		20	6.7	ug/L	1
Benzene	71-43-2	8260B	ND		1.0	0.13	ug/L	1
Bromodichloromethane	75-27-4	8260B	ND		1.0	0.33	ug/L	1
Bromoform	75-25-2	8260B	ND		1.0	0.66	ug/L	1
Bromomethane (Methyl bromide)	74-83-9	8260B	ND		2.0	0.80	ug/L	1
2-Butanone (MEK)	78-93-3	8260B	ND		10	2.0	ug/L	1
Carbon disulfide	75-15-0	8260B	ND		1.0	0.097	ug/L	1
Carbon tetrachloride	56-23-5	8260B	ND		1.0	0.14	ug/L	1
Chlorobenzene	108-90-7	8260B	ND		2.0	0.33	ug/L	1
Chloroethane	75-00-3	8260B	ND		2.0	0.47	ug/L	1
Chloroform	67-66-3	8260B	ND		1.0	0.33	ug/L	1
Chloromethane (Methyl chloride)	74-87-3	8260B	ND		1.0	0.35	ug/L	1
Dibromochloromethane	124-48-1	8260B	ND		1.0	0.33	ug/L	1
1,4-Dichlorobenzene	106-46-7	8260B	ND		1.0	0.33	ug/L	1
1,3-Dichlorobenzene	541-73-1	8260B	ND		1.0	0.33	ug/L	1
1,2-Dichlorobenzene	95-50-1	8260B	ND		1.0	0.33	ug/L	1
1,2-Dichloroethane	107-06-2	8260B	ND		1.0	0.15	ug/L	1
1,1-Dichloroethane	75-34-3	8260B	ND		1.0	0.13	ug/L	1
trans-1,2-Dichloroethene	156-60-5	8260B	ND		1.0	0.21	ug/L	1
cis-1,2-Dichloroethene	156-59-2	8260B	ND		1.0	0.12	ug/L	1
1,1-Dichloroethene	75-35-4	8260B	ND		1.0	0.16	ug/L	1
1,2-Dichloropropane	78-87-5	8260B	ND		1.0	0.19	ug/L	1
trans-1,3-Dichloropropene	10061-02-6	8260B	ND		1.0	0.11	ug/L	1
cis-1,3-Dichloropropene	10061-01-5	8260B	ND		1.0	0.092	ug/L	1
Ethylbenzene	100-41-4	8260B	ND		1.0	0.33	ug/L	1
2-Hexanone	591-78-6	8260B	ND		10	0.27	ug/L	1
Methyl tertiary butyl ether (MTBE)	1634-04-4	8260B	ND		1.0	0.40	ug/L	1
4-Methyl-2-pentanone	108-10-1	8260B	ND		10	0.31	ug/L	1
Methylene chloride	75-09-2	8260B	ND		1.0	0.33	ug/L	1
Styrene	100-42-5	8260B	ND		1.0	0.12	ug/L	1
1,1,2,2-Tetrachloroethane	79-34-5	8260B	ND		1.0	0.16	ug/L	1
Tetrachloroethene	127-18-4	8260B	ND		1.0	0.13	ug/L	1
Toluene	108-88-3	8260B	ND		1.0	0.33	ug/L	1
1,2,4-Trichlorobenzene	120-82-1	8260B	ND		1.0	0.51	ug/L	1
1,1,2-Trichloroethane	79-00-5	8260B	ND		1.0	0.21	ug/L	1
1,1,1-Trichloroethane	71-55-6	8260B	ND		1.0	0.074	ug/L	1
Trichloroethene	79-01-6	8260B	ND		1.0	0.18	ug/L	1
Vinyl chloride	75-01-4	8260B	ND		1.0	0.054	ug/L	1
Xylenes (total)	1330-20-7	8260B	ND		1.0	0.33	ug/L	1

PQL = Practical quantitation limit
B = Detected in the method blank
E = Quantitation of compound exceeded the calibration range
ND = Not detected at or above the MDL
J = Estimated result < PQL and ≥ MDL
P = The RPD between two GC columns exceeds 40%
Where applicable, all soil sample analysis are reported on a dry weight basis unless flagged with a "W"
N = Recovery is out of criteria
H = Out of holding time

Volatile Organic Compounds by GC/MS

Client: ARCADIS U.S., Inc.
Laboratory ID: MA26019-017
Description: G4MW045
Matrix: Aqueous
Date Sampled: 01/26/2011 1715
Date Received: 01/29/2011

Surrogate	Q	Run 1 % Recovery	Acceptance Limits
1,2-Dichloroethane-d4		77	70-130
Bromofluorobenzene		88	70-130
Toluene-d8		91	70-130

PQL = Practical quantitation limit
B = Detected in the method blank
E = Quantitation of compound exceeded the calibration range
ND = Not detected at or above the MDL
J = Estimated result < PQL and ≥ MDL
P = The RPD between two GC columns exceeds 40%
Where applicable, all soil sample analysis are reported on a dry weight basis unless flagged with a "W"
N = Recovery is out of criteria
H = Out of holding time

Semivolatile Organic Compounds by GC/MS

Client: ARCADIS U.S., Inc.
Laboratory ID: MA26019-017
Description: G4MW045
Matrix: Aqueous
Date Sampled: 01/26/2011 1715
Date Received: 01/29/2011

Run	Prep Method	Analytical Method	Dilution	Analysis Date	Analyst	Prep Date	Batch
1	3520C	8270D	1	02/02/2011 1607	JGH	01/31/2011 1400	51711

Parameter	CAS Number	Analytical Method	Result	Q	PQL	MDL	Units	Run
Acenaphthene	83-32-9	8270D	ND		1.0	0.092	ug/L	1
Acenaphthylene	208-96-8	8270D	ND		1.0	0.16	ug/L	1
Anthracene	120-12-7	8270D	ND		1.0	0.13	ug/L	1
Benzo(a)anthracene	56-55-3	8270D	ND		1.0	0.15	ug/L	1
Benzo(a)pyrene	50-32-8	8270D	ND		1.0	0.16	ug/L	1
Benzo(b)fluoranthene	205-99-2	8270D	ND		1.0	0.20	ug/L	1
Benzo(g,h,i)perylene	191-24-2	8270D	ND		1.0	0.23	ug/L	1
Benzo(k)fluoranthene	207-08-9	8270D	ND		1.0	0.12	ug/L	1
4-Bromophenyl phenyl ether	101-55-3	8270D	ND		1.0	0.12	ug/L	1
Butyl benzyl phthalate	85-68-7	8270D	ND		5.1	1.7	ug/L	1
Carbazole	86-74-8	8270D	ND		1.0	0.26	ug/L	1
4-Chloro-3-methyl phenol	59-50-7	8270D	ND		1.0	0.22	ug/L	1
4-Chloroaniline	106-47-8	8270D	ND		1.0	0.13	ug/L	1
bis(2-Chloroethoxy)methane	111-91-1	8270D	ND		1.0	0.13	ug/L	1
bis(2-Chloroisopropyl)ether	108-60-1	8270D	ND		1.0	0.082	ug/L	1
2-Chloronaphthalene	91-58-7	8270D	ND		1.0	0.12	ug/L	1
2-Chlorophenol	95-57-8	8270D	ND		1.0	0.13	ug/L	1
4-Chlorophenyl phenyl ether	7005-72-3	8270D	ND		1.0	0.11	ug/L	1
Chrysene	218-01-9	8270D	ND		1.0	0.12	ug/L	1
Dibenzo(a,h)anthracene	53-70-3	8270D	ND		1.0	0.13	ug/L	1
Dibenzofuran	132-64-9	8270D	ND		1.0	0.16	ug/L	1
3,3'-Dichlorobenzidine	91-94-1	8270D	ND		5.1	0.83	ug/L	1
2,4-Dichlorophenol	120-83-2	8270D	ND		1.0	0.15	ug/L	1
Diethylphthalate	84-66-2	8270D	ND		5.1	1.7	ug/L	1
Dimethyl phthalate	131-11-3	8270D	ND		5.1	1.7	ug/L	1
2,4-Dimethylphenol	105-67-9	8270D	ND		1.0	0.32	ug/L	1
Di-n-butyl phthalate	84-74-2	8270D	ND		5.1	1.7	ug/L	1
4,6-Dinitro-2-methylphenol	534-52-1	8270D	ND		5.1	1.5	ug/L	1
2,4-Dinitrophenol	51-28-5	8270D	ND		5.1	0.26	ug/L	1
2,4-Dinitrotoluene	121-14-2	8270D	ND		2.0	0.46	ug/L	1
2,6-Dinitrotoluene	606-20-2	8270D	ND		2.0	0.41	ug/L	1
Di-n-octylphthalate	117-84-0	8270D	ND		5.1	1.7	ug/L	1
bis(2-Ethylhexyl)phthalate	117-81-7	8270D	ND		5.1	1.7	ug/L	1
Fluoranthene	206-44-0	8270D	ND		1.0	0.21	ug/L	1
Fluorene	86-73-7	8270D	ND		1.0	0.10	ug/L	1
Hexachlorobenzene	118-74-1	8270D	ND		1.0	0.21	ug/L	1
Hexachlorobutadiene	87-68-3	8270D	ND		1.0	0.092	ug/L	1
Hexachlorocyclopentadiene	77-47-4	8270D	ND		5.1	0.23	ug/L	1
Hexachloroethane	67-72-1	8270D	ND		1.0	0.11	ug/L	1
Indeno(1,2,3-c,d)pyrene	193-39-5	8270D	ND		1.0	0.23	ug/L	1
Isophorone	78-59-1	8270D	ND		1.0	0.082	ug/L	1
2-Methylnaphthalene	91-57-6	8270D	ND		1.0	0.082	ug/L	1
2-Methylphenol	95-48-7	8270D	ND		1.0	0.17	ug/L	1
3 & 4-Methylphenol	106-44-5	8270D	ND		2.0	0.58	ug/L	1

PQL = Practical quantitation limit
B = Detected in the method blank
E = Quantitation of compound exceeded the calibration range
ND = Not detected at or above the MDL
J = Estimated result < PQL and ≥ MDL
P = The RPD between two GC columns exceeds 40%
Where applicable, all soil sample analysis are reported on a dry weight basis unless flagged with a "W"
N = Recovery is out of criteria
H = Out of holding time

Semivolatile Organic Compounds by GC/MS

Client: ARCADIS U.S., Inc.
Laboratory ID: MA26019-017
Description: G4MW045
Matrix: Aqueous
Date Sampled: 01/26/2011 1715
Date Received: 01/29/2011

Run	Prep Method	Analytical Method	Dilution	Analysis Date	Analyst	Prep Date	Batch
1	3520C	8270D	1	02/02/2011 1607	JGH	01/31/2011 1400	51711

Parameter	CAS Number	Analytical Method	Result	Q	PQL	MDL	Units	Run
Naphthalene	91-20-3	8270D	ND		1.0	0.071	ug/L	1
2-Nitroaniline	88-74-4	8270D	ND		2.0	0.56	ug/L	1
3-Nitroaniline	99-09-2	8270D	ND		2.0	0.79	ug/L	1
4-Nitroaniline	100-01-6	8270D	ND		2.0	0.40	ug/L	1
Nitrobenzene	98-95-3	8270D	ND		1.0	0.10	ug/L	1
2-Nitrophenol	88-75-5	8270D	ND		2.0	0.28	ug/L	1
4-Nitrophenol	100-02-7	8270D	ND		5.1	0.65	ug/L	1
N-Nitrosodi-n-propylamine	621-64-7	8270D	ND		1.0	0.082	ug/L	1
N-Nitrosodiphenylamine (Diphenylamine)	86-30-6	8270D	ND		1.0	0.39	ug/L	1
Pentachlorophenol	87-86-5	8270D	ND		5.1	0.55	ug/L	1
Phenanthrene	85-01-8	8270D	ND		1.0	0.18	ug/L	1
Phenol	108-95-2	8270D	ND		1.0	0.11	ug/L	1
Pyrene	129-00-0	8270D	ND		1.0	0.16	ug/L	1
2,4,5-Trichlorophenol	95-95-4	8270D	ND		1.0	0.18	ug/L	1
2,4,6-Trichlorophenol	88-06-2	8270D	ND		1.0	0.22	ug/L	1

Surrogate	Q	Run 1 % Recovery	Acceptance Limits
2-Fluorobiphenyl		52	37-129
2-Fluorophenol		69	24-127
Nitrobenzene-d5		63	38-127
Phenol-d5		59	28-128
Terphenyl-d14		54	10-148
2,4,6-Tribromophenol		65	41-144

PQL = Practical quantitation limit
B = Detected in the method blank
E = Quantitation of compound exceeded the calibration range
ND = Not detected at or above the MDL
J = Estimated result < PQL and ≥ MDL
P = The RPD between two GC columns exceeds 40%
Where applicable, all soil sample analysis are reported on a dry weight basis unless flagged with a "W"
N = Recovery is out of criteria
H = Out of holding time

Dissolved RCRA Metals

Client: ARCADIS U.S., Inc.
Laboratory ID: MA26019-017
Description: G4MW045
Matrix: Aqueous
Date Sampled: 01/26/2011 1715
Date Received: 01/29/2011

Run	Prep Method	Analytical Method	Dilution	Analysis Date	Analyst	Prep Date	Batch
1		7470A	1	02/01/2011 1345	BNW	02/01/2011 1020	51804
1	3005A	6010C	1	02/01/2011 2229	CDF	01/31/2011 1050	51695

Parameter	CAS Number	Analytical Method	Result	Q	PQL	MDL	Units	Run
Dissolved Arsenic	7440-38-2	6010C	0.0070	J	0.010	0.0040	mg/L	1
Dissolved Barium	7440-39-3	6010C	0.060		0.025	0.0075	mg/L	1
Dissolved Cadmium	7440-43-9	6010C	ND		0.0020	0.00060	mg/L	1
Dissolved Chromium	7440-47-3	6010C	ND		0.0050	0.0021	mg/L	1
Dissolved Lead	7439-92-1	6010C	ND		0.010	0.0019	mg/L	1
Dissolved Mercury	7439-97-6	7470A	ND		0.00010	0.000053	mg/L	1
Dissolved Selenium	7782-49-2	6010C	ND		0.010	0.0026	mg/L	1
Dissolved Silver	7440-22-4	6010C	ND		0.0050	0.00040	mg/L	1

PQL = Practical quantitation limit
B = Detected in the method blank
E = Quantitation of compound exceeded the calibration range
ND = Not detected at or above the MDL
J = Estimated result < PQL and ≥ MDL
P = The RPD between two GC columns exceeds 40%
Where applicable, all soil sample analysis are reported on a dry weight basis unless flagged with a "W"
N = Recovery is out of criteria
H = Out of holding time

RCRA Metals

Client: ARCADIS U.S., Inc.
Laboratory ID: MA26019-017
Description: G4MW045
Matrix: Aqueous
Date Sampled: 01/26/2011 1715
Date Received: 01/29/2011

Run	Prep Method	Analytical Method	Dilution	Analysis Date	Analyst	Prep Date	Batch
1		7470A	1	02/01/2011 1343	BNW	02/01/2011 1020	51804
1	3005A	6010C	1	02/01/2011 2225	CDF	01/31/2011 1050	51695

Parameter	CAS Number	Analytical Method	Result	Q	PQL	MDL	Units	Run
Arsenic	7440-38-2	6010C	0.0061	J	0.010	0.0040	mg/L	1
Barium	7440-39-3	6010C	0.062		0.025	0.0075	mg/L	1
Cadmium	7440-43-9	6010C	ND		0.0020	0.00060	mg/L	1
Chromium	7440-47-3	6010C	ND		0.0050	0.0021	mg/L	1
Lead	7439-92-1	6010C	ND		0.010	0.0019	mg/L	1
Mercury	7439-97-6	7470A	ND		0.00010	0.000053	mg/L	1
Selenium	7782-49-2	6010C	ND		0.010	0.0026	mg/L	1
Silver	7440-22-4	6010C	ND		0.0050	0.00040	mg/L	1

PQL = Practical quantitation limit
B = Detected in the method blank
E = Quantitation of compound exceeded the calibration range
ND = Not detected at or above the MDL
J = Estimated result < PQL and ≥ MDL
P = The RPD between two GC columns exceeds 40%
Where applicable, all soil sample analysis are reported on a dry weight basis unless flagged with a "W"
N = Recovery is out of criteria
H = Out of holding time

Volatile Organic Compounds by GC/MS

Client: ARCADIS U.S., Inc.
Laboratory ID: MA26019-018
Description: G4MW034
Matrix: Aqueous
Date Sampled: 01/26/2011 1815
Date Received: 01/29/2011

Run	Prep Method	Analytical Method	Dilution	Analysis Date	Analyst	Prep Date	Batch
1	5030B	8260B	1	02/01/2011 0348	DLB		52836

Parameter	CAS Number	Analytical Method	Result	Q	PQL	MDL	Units	Run
Acetone	67-64-1	8260B	ND		20	6.7	ug/L	1
Benzene	71-43-2	8260B	ND		1.0	0.13	ug/L	1
Bromodichloromethane	75-27-4	8260B	ND		1.0	0.33	ug/L	1
Bromoform	75-25-2	8260B	ND		1.0	0.66	ug/L	1
Bromomethane (Methyl bromide)	74-83-9	8260B	ND		2.0	0.80	ug/L	1
2-Butanone (MEK)	78-93-3	8260B	ND		10	2.0	ug/L	1
Carbon disulfide	75-15-0	8260B	ND		1.0	0.097	ug/L	1
Carbon tetrachloride	56-23-5	8260B	ND		1.0	0.14	ug/L	1
Chlorobenzene	108-90-7	8260B	ND		2.0	0.33	ug/L	1
Chloroethane	75-00-3	8260B	ND		2.0	0.47	ug/L	1
Chloroform	67-66-3	8260B	ND		1.0	0.33	ug/L	1
Chloromethane (Methyl chloride)	74-87-3	8260B	ND		1.0	0.35	ug/L	1
Dibromochloromethane	124-48-1	8260B	ND		1.0	0.33	ug/L	1
1,4-Dichlorobenzene	106-46-7	8260B	ND		1.0	0.33	ug/L	1
1,3-Dichlorobenzene	541-73-1	8260B	ND		1.0	0.33	ug/L	1
1,2-Dichlorobenzene	95-50-1	8260B	ND		1.0	0.33	ug/L	1
1,2-Dichloroethane	107-06-2	8260B	ND		1.0	0.15	ug/L	1
1,1-Dichloroethane	75-34-3	8260B	ND		1.0	0.13	ug/L	1
trans-1,2-Dichloroethene	156-60-5	8260B	ND		1.0	0.21	ug/L	1
cis-1,2-Dichloroethene	156-59-2	8260B	ND		1.0	0.12	ug/L	1
1,1-Dichloroethene	75-35-4	8260B	ND		1.0	0.16	ug/L	1
1,2-Dichloropropane	78-87-5	8260B	ND		1.0	0.19	ug/L	1
trans-1,3-Dichloropropene	10061-02-6	8260B	ND		1.0	0.11	ug/L	1
cis-1,3-Dichloropropene	10061-01-5	8260B	ND		1.0	0.092	ug/L	1
Ethylbenzene	100-41-4	8260B	ND		1.0	0.33	ug/L	1
2-Hexanone	591-78-6	8260B	ND		10	0.27	ug/L	1
Methyl tertiary butyl ether (MTBE)	1634-04-4	8260B	ND		1.0	0.40	ug/L	1
4-Methyl-2-pentanone	108-10-1	8260B	ND		10	0.31	ug/L	1
Methylene chloride	75-09-2	8260B	ND		1.0	0.33	ug/L	1
Styrene	100-42-5	8260B	ND		1.0	0.12	ug/L	1
1,1,2,2-Tetrachloroethane	79-34-5	8260B	ND		1.0	0.16	ug/L	1
Tetrachloroethene	127-18-4	8260B	ND		1.0	0.13	ug/L	1
Toluene	108-88-3	8260B	ND		1.0	0.33	ug/L	1
1,2,4-Trichlorobenzene	120-82-1	8260B	ND		1.0	0.51	ug/L	1
1,1,2-Trichloroethane	79-00-5	8260B	ND		1.0	0.21	ug/L	1
1,1,1-Trichloroethane	71-55-6	8260B	ND		1.0	0.074	ug/L	1
Trichloroethene	79-01-6	8260B	ND		1.0	0.18	ug/L	1
Vinyl chloride	75-01-4	8260B	ND		1.0	0.054	ug/L	1
Xylenes (total)	1330-20-7	8260B	ND		1.0	0.33	ug/L	1

PQL = Practical quantitation limit
B = Detected in the method blank
E = Quantitation of compound exceeded the calibration range
ND = Not detected at or above the MDL
J = Estimated result < PQL and ≥ MDL
P = The RPD between two GC columns exceeds 40%
Where applicable, all soil sample analysis are reported on a dry weight basis unless flagged with a "W"
N = Recovery is out of criteria
H = Out of holding time

Volatile Organic Compounds by GC/MS

Client: ARCADIS U.S., Inc.
Laboratory ID: MA26019-018
Description: G4MW034
Matrix: Aqueous
Date Sampled: 01/26/2011 1815
Date Received: 01/29/2011

Surrogate	Q	Run 1 % Recovery	Acceptance Limits
1,2-Dichloroethane-d4		77	70-130
Bromofluorobenzene		87	70-130
Toluene-d8		93	70-130

PQL = Practical quantitation limit
B = Detected in the method blank
E = Quantitation of compound exceeded the calibration range
ND = Not detected at or above the MDL
J = Estimated result < PQL and ≥ MDL
P = The RPD between two GC columns exceeds 40%
Where applicable, all soil sample analysis are reported on a dry weight basis unless flagged with a "W"
N = Recovery is out of criteria
H = Out of holding time

Semivolatile Organic Compounds by GC/MS

Client: ARCADIS U.S., Inc.
Laboratory ID: MA26019-018
Description: G4MW034
Matrix: Aqueous
Date Sampled: 01/26/2011 1815
Date Received: 01/29/2011

Run	Prep Method	Analytical Method	Dilution	Analysis Date	Analyst	Prep Date	Batch
1	3520C	8270D	1	02/02/2011 1626	JGH	01/31/2011 1400	51711

Parameter	CAS Number	Analytical Method	Result	Q	PQL	MDL	Units	Run
Acenaphthene	83-32-9	8270D	ND		1.0	0.090	ug/L	1
Acenaphthylene	208-96-8	8270D	ND		1.0	0.16	ug/L	1
Anthracene	120-12-7	8270D	ND		1.0	0.13	ug/L	1
Benzo(a)anthracene	56-55-3	8270D	ND		1.0	0.15	ug/L	1
Benzo(a)pyrene	50-32-8	8270D	ND		1.0	0.16	ug/L	1
Benzo(b)fluoranthene	205-99-2	8270D	ND		1.0	0.20	ug/L	1
Benzo(g,h,i)perylene	191-24-2	8270D	ND		1.0	0.23	ug/L	1
Benzo(k)fluoranthene	207-08-9	8270D	ND		1.0	0.12	ug/L	1
4-Bromophenyl phenyl ether	101-55-3	8270D	ND		1.0	0.12	ug/L	1
Butyl benzyl phthalate	85-68-7	8270D	ND		5.0	1.7	ug/L	1
Carbazole	86-74-8	8270D	ND		1.0	0.25	ug/L	1
4-Chloro-3-methyl phenol	59-50-7	8270D	ND		1.0	0.22	ug/L	1
4-Chloroaniline	106-47-8	8270D	ND		1.0	0.13	ug/L	1
bis(2-Chloroethoxy)methane	111-91-1	8270D	ND		1.0	0.13	ug/L	1
bis(2-Chloroisopropyl)ether	108-60-1	8270D	ND		1.0	0.080	ug/L	1
2-Chloronaphthalene	91-58-7	8270D	ND		1.0	0.12	ug/L	1
2-Chlorophenol	95-57-8	8270D	ND		1.0	0.13	ug/L	1
4-Chlorophenyl phenyl ether	7005-72-3	8270D	ND		1.0	0.11	ug/L	1
Chrysene	218-01-9	8270D	ND		1.0	0.12	ug/L	1
Dibenzo(a,h)anthracene	53-70-3	8270D	ND		1.0	0.13	ug/L	1
Dibenzofuran	132-64-9	8270D	ND		1.0	0.16	ug/L	1
3,3'-Dichlorobenzidine	91-94-1	8270D	ND		5.0	0.81	ug/L	1
2,4-Dichlorophenol	120-83-2	8270D	ND		1.0	0.15	ug/L	1
Diethylphthalate	84-66-2	8270D	ND		5.0	1.7	ug/L	1
Dimethyl phthalate	131-11-3	8270D	ND		5.0	1.7	ug/L	1
2,4-Dimethylphenol	105-67-9	8270D	ND		1.0	0.31	ug/L	1
Di-n-butyl phthalate	84-74-2	8270D	ND		5.0	1.7	ug/L	1
4,6-Dinitro-2-methylphenol	534-52-1	8270D	ND		5.0	1.5	ug/L	1
2,4-Dinitrophenol	51-28-5	8270D	ND		5.0	0.25	ug/L	1
2,4-Dinitrotoluene	121-14-2	8270D	ND		2.0	0.45	ug/L	1
2,6-Dinitrotoluene	606-20-2	8270D	ND		2.0	0.40	ug/L	1
Di-n-octylphthalate	117-84-0	8270D	ND		5.0	1.7	ug/L	1
bis(2-Ethylhexyl)phthalate	117-81-7	8270D	ND		5.0	1.7	ug/L	1
Fluoranthene	206-44-0	8270D	ND		1.0	0.21	ug/L	1
Fluorene	86-73-7	8270D	ND		1.0	0.10	ug/L	1
Hexachlorobenzene	118-74-1	8270D	ND		1.0	0.21	ug/L	1
Hexachlorobutadiene	87-68-3	8270D	ND		1.0	0.090	ug/L	1
Hexachlorocyclopentadiene	77-47-4	8270D	ND		5.0	0.23	ug/L	1
Hexachloroethane	67-72-1	8270D	ND		1.0	0.11	ug/L	1
Indeno(1,2,3-c,d)pyrene	193-39-5	8270D	ND		1.0	0.23	ug/L	1
Isophorone	78-59-1	8270D	ND		1.0	0.080	ug/L	1
2-Methylnaphthalene	91-57-6	8270D	ND		1.0	0.080	ug/L	1
2-Methylphenol	95-48-7	8270D	ND		1.0	0.17	ug/L	1
3 & 4-Methylphenol	106-44-5	8270D	ND		2.0	0.57	ug/L	1

PQL = Practical quantitation limit
B = Detected in the method blank
E = Quantitation of compound exceeded the calibration range
ND = Not detected at or above the MDL
J = Estimated result < PQL and ≥ MDL
P = The RPD between two GC columns exceeds 40%
Where applicable, all soil sample analysis are reported on a dry weight basis unless flagged with a "W"
N = Recovery is out of criteria
H = Out of holding time

Semivolatile Organic Compounds by GC/MS

Client: ARCADIS U.S., Inc.
Laboratory ID: MA26019-018
Description: G4MW034
Matrix: Aqueous
Date Sampled: 01/26/2011 1815
Date Received: 01/29/2011

Run	Prep Method	Analytical Method	Dilution	Analysis Date	Analyst	Prep Date	Batch
1	3520C	8270D	1	02/02/2011 1626	JGH	01/31/2011 1400	51711

Parameter	CAS Number	Analytical Method	Result	Q	PQL	MDL	Units	Run
Naphthalene	91-20-3	8270D	ND		1.0	0.070	ug/L	1
2-Nitroaniline	88-74-4	8270D	ND		2.0	0.55	ug/L	1
3-Nitroaniline	99-09-2	8270D	ND		2.0	0.77	ug/L	1
4-Nitroaniline	100-01-6	8270D	ND		2.0	0.39	ug/L	1
Nitrobenzene	98-95-3	8270D	ND		1.0	0.10	ug/L	1
2-Nitrophenol	88-75-5	8270D	ND		2.0	0.27	ug/L	1
4-Nitrophenol	100-02-7	8270D	ND		5.0	0.64	ug/L	1
N-Nitrosodi-n-propylamine	621-64-7	8270D	ND		1.0	0.080	ug/L	1
N-Nitrosodiphenylamine (Diphenylamine)	86-30-6	8270D	ND		1.0	0.38	ug/L	1
Pentachlorophenol	87-86-5	8270D	ND		5.0	0.54	ug/L	1
Phenanthrene	85-01-8	8270D	ND		1.0	0.18	ug/L	1
Phenol	108-95-2	8270D	ND		1.0	0.11	ug/L	1
Pyrene	129-00-0	8270D	ND		1.0	0.16	ug/L	1
2,4,5-Trichlorophenol	95-95-4	8270D	ND		1.0	0.18	ug/L	1
2,4,6-Trichlorophenol	88-06-2	8270D	ND		1.0	0.22	ug/L	1

Surrogate	Q	Run 1 % Recovery	Acceptance Limits
2-Fluorobiphenyl		43	37-129
2-Fluorophenol		53	24-127
Nitrobenzene-d5		41	38-127
Phenol-d5		42	28-128
Terphenyl-d14		41	10-148
2,4,6-Tribromophenol		54	41-144

PQL = Practical quantitation limit
B = Detected in the method blank
E = Quantitation of compound exceeded the calibration range
ND = Not detected at or above the MDL
J = Estimated result < PQL and ≥ MDL
P = The RPD between two GC columns exceeds 40%
Where applicable, all soil sample analysis are reported on a dry weight basis unless flagged with a "W"
N = Recovery is out of criteria
H = Out of holding time

Dissolved RCRA Metals

Client: ARCADIS U.S., Inc.
Laboratory ID: MA26019-018
Description: G4MW034
Matrix: Aqueous
Date Sampled: 01/26/2011 1815
Date Received: 01/29/2011

Run	Prep Method	Analytical Method	Dilution	Analysis Date	Analyst	Prep Date	Batch
1		7470A	1	02/01/2011 1350	BNW	02/01/2011 1020	51804
1	3005A	6010C	1	02/01/2011 2237	CDF	01/31/2011 1050	51695

Parameter	CAS Number	Analytical Method	Result	Q	PQL	MDL	Units	Run
Dissolved Arsenic	7440-38-2	6010C	ND		0.010	0.0040	mg/L	1
Dissolved Barium	7440-39-3	6010C	0.060		0.025	0.0075	mg/L	1
Dissolved Cadmium	7440-43-9	6010C	ND		0.0020	0.00060	mg/L	1
Dissolved Chromium	7440-47-3	6010C	0.0022	J	0.0050	0.0021	mg/L	1
Dissolved Lead	7439-92-1	6010C	ND		0.010	0.0019	mg/L	1
Dissolved Mercury	7439-97-6	7470A	ND		0.00010	0.000053	mg/L	1
Dissolved Selenium	7782-49-2	6010C	ND		0.010	0.0026	mg/L	1
Dissolved Silver	7440-22-4	6010C	ND		0.0050	0.00040	mg/L	1

PQL = Practical quantitation limit
B = Detected in the method blank
E = Quantitation of compound exceeded the calibration range
ND = Not detected at or above the MDL
J = Estimated result < PQL and ≥ MDL
P = The RPD between two GC columns exceeds 40%
Where applicable, all soil sample analysis are reported on a dry weight basis unless flagged with a "W"
N = Recovery is out of criteria
H = Out of holding time

RCRA Metals

Client: ARCADIS U.S., Inc.
Laboratory ID: MA26019-018
Description: G4MW034
Matrix: Aqueous
Date Sampled: 01/26/2011 1815
Date Received: 01/29/2011

Run	Prep Method	Analytical Method	Dilution	Analysis Date	Analyst	Prep Date	Batch
1		7470A	1	02/01/2011 1348	BNW	02/01/2011 1020	51804
1	3005A	6010C	1	02/01/2011 2233	CDF	01/31/2011 1050	51695

Parameter	CAS Number	Analytical Method	Result	Q	PQL	MDL	Units	Run
Arsenic	7440-38-2	6010C	ND		0.010	0.0040	mg/L	1
Barium	7440-39-3	6010C	0.068		0.025	0.0075	mg/L	1
Cadmium	7440-43-9	6010C	ND		0.0020	0.00060	mg/L	1
Chromium	7440-47-3	6010C	0.0044	J	0.0050	0.0021	mg/L	1
Lead	7439-92-1	6010C	ND		0.010	0.0019	mg/L	1
Mercury	7439-97-6	7470A	ND		0.00010	0.000053	mg/L	1
Selenium	7782-49-2	6010C	ND		0.010	0.0026	mg/L	1
Silver	7440-22-4	6010C	ND		0.0050	0.00040	mg/L	1

PQL = Practical quantitation limit
B = Detected in the method blank
E = Quantitation of compound exceeded the calibration range
ND = Not detected at or above the MDL
J = Estimated result < PQL and ≥ MDL
P = The RPD between two GC columns exceeds 40%
Where applicable, all soil sample analysis are reported on a dry weight basis unless flagged with a "W"
N = Recovery is out of criteria
H = Out of holding time

Volatile Organic Compounds by GC/MS

Client: ARCADIS U.S., Inc.
Laboratory ID: MA26019-019
Description: G4MW035
Matrix: Aqueous
Date Sampled: 01/26/2011 1905
Date Received: 01/29/2011

Run	Prep Method	Analytical Method	Dilution	Analysis Date	Analyst	Prep Date	Batch
1	5030B	8260B	1	02/01/2011 0410	DLB		52836

Parameter	CAS Number	Analytical Method	Result	Q	PQL	MDL	Units	Run
Acetone	67-64-1	8260B	ND		20	6.7	ug/L	1
Benzene	71-43-2	8260B	16		1.0	0.13	ug/L	1
Bromodichloromethane	75-27-4	8260B	ND		1.0	0.33	ug/L	1
Bromoform	75-25-2	8260B	ND		1.0	0.66	ug/L	1
Bromomethane (Methyl bromide)	74-83-9	8260B	ND		2.0	0.80	ug/L	1
2-Butanone (MEK)	78-93-3	8260B	ND		10	2.0	ug/L	1
Carbon disulfide	75-15-0	8260B	ND		1.0	0.097	ug/L	1
Carbon tetrachloride	56-23-5	8260B	ND		1.0	0.14	ug/L	1
Chlorobenzene	108-90-7	8260B	ND		2.0	0.33	ug/L	1
Chloroethane	75-00-3	8260B	ND		2.0	0.47	ug/L	1
Chloroform	67-66-3	8260B	ND		1.0	0.33	ug/L	1
Chloromethane (Methyl chloride)	74-87-3	8260B	ND		1.0	0.35	ug/L	1
Dibromochloromethane	124-48-1	8260B	ND		1.0	0.33	ug/L	1
1,4-Dichlorobenzene	106-46-7	8260B	ND		1.0	0.33	ug/L	1
1,3-Dichlorobenzene	541-73-1	8260B	ND		1.0	0.33	ug/L	1
1,2-Dichlorobenzene	95-50-1	8260B	ND		1.0	0.33	ug/L	1
1,2-Dichloroethane	107-06-2	8260B	ND		1.0	0.15	ug/L	1
1,1-Dichloroethane	75-34-3	8260B	0.28	J	1.0	0.13	ug/L	1
trans-1,2-Dichloroethene	156-60-5	8260B	2.0		1.0	0.21	ug/L	1
cis-1,2-Dichloroethene	156-59-2	8260B	7.5		1.0	0.12	ug/L	1
1,1-Dichloroethene	75-35-4	8260B	0.64	J	1.0	0.16	ug/L	1
1,2-Dichloropropane	78-87-5	8260B	ND		1.0	0.19	ug/L	1
trans-1,3-Dichloropropene	10061-02-6	8260B	ND		1.0	0.11	ug/L	1
cis-1,3-Dichloropropene	10061-01-5	8260B	ND		1.0	0.092	ug/L	1
Ethylbenzene	100-41-4	8260B	ND		1.0	0.33	ug/L	1
2-Hexanone	591-78-6	8260B	ND		10	0.27	ug/L	1
Methyl tertiary butyl ether (MTBE)	1634-04-4	8260B	ND		1.0	0.40	ug/L	1
4-Methyl-2-pentanone	108-10-1	8260B	ND		10	0.31	ug/L	1
Methylene chloride	75-09-2	8260B	ND		1.0	0.33	ug/L	1
Styrene	100-42-5	8260B	ND		1.0	0.12	ug/L	1
1,1,2,2-Tetrachloroethane	79-34-5	8260B	ND		1.0	0.16	ug/L	1
Tetrachloroethene	127-18-4	8260B	ND		1.0	0.13	ug/L	1
Toluene	108-88-3	8260B	ND		1.0	0.33	ug/L	1
1,2,4-Trichlorobenzene	120-82-1	8260B	ND		1.0	0.51	ug/L	1
1,1,2-Trichloroethane	79-00-5	8260B	ND		1.0	0.21	ug/L	1
1,1,1-Trichloroethane	71-55-6	8260B	ND		1.0	0.074	ug/L	1
Trichloroethene	79-01-6	8260B	3.7		1.0	0.18	ug/L	1
Vinyl chloride	75-01-4	8260B	ND		1.0	0.054	ug/L	1
Xylenes (total)	1330-20-7	8260B	ND		1.0	0.33	ug/L	1

PQL = Practical quantitation limit
B = Detected in the method blank
E = Quantitation of compound exceeded the calibration range
ND = Not detected at or above the MDL
J = Estimated result < PQL and ≥ MDL
P = The RPD between two GC columns exceeds 40%
Where applicable, all soil sample analysis are reported on a dry weight basis unless flagged with a "W"
N = Recovery is out of criteria
H = Out of holding time

Volatile Organic Compounds by GC/MS

Client: ARCADIS U.S., Inc.
Laboratory ID: MA26019-019
Description: G4MW035
Matrix: Aqueous
Date Sampled: 01/26/2011 1905
Date Received: 01/29/2011

Surrogate	Q	Run 1 % Recovery	Acceptance Limits
1,2-Dichloroethane-d4		75	70-130
Bromofluorobenzene		88	70-130
Toluene-d8		92	70-130

PQL = Practical quantitation limit
B = Detected in the method blank
E = Quantitation of compound exceeded the calibration range
ND = Not detected at or above the MDL
J = Estimated result < PQL and ≥ MDL
P = The RPD between two GC columns exceeds 40%
Where applicable, all soil sample analysis are reported on a dry weight basis unless flagged with a "W"
N = Recovery is out of criteria
H = Out of holding time

Semivolatile Organic Compounds by GC/MS

Client: ARCADIS U.S., Inc.
Laboratory ID: MA26019-019
Description: G4MW035
Matrix: Aqueous
Date Sampled: 01/26/2011 1905
Date Received: 01/29/2011

Run	Prep Method	Analytical Method	Dilution	Analysis Date	Analyst	Prep Date	Batch
1	3520C	8270D	1	02/02/2011 1644	JGH	01/31/2011 1400	51711

Parameter	CAS Number	Analytical Method	Result	Q	PQL	MDL	Units	Run
Acenaphthene	83-32-9	8270D	ND		1.0	0.092	ug/L	1
Acenaphthylene	208-96-8	8270D	ND		1.0	0.16	ug/L	1
Anthracene	120-12-7	8270D	ND		1.0	0.13	ug/L	1
Benzo(a)anthracene	56-55-3	8270D	ND		1.0	0.15	ug/L	1
Benzo(a)pyrene	50-32-8	8270D	ND		1.0	0.16	ug/L	1
Benzo(b)fluoranthene	205-99-2	8270D	ND		1.0	0.20	ug/L	1
Benzo(g,h,i)perylene	191-24-2	8270D	ND		1.0	0.23	ug/L	1
Benzo(k)fluoranthene	207-08-9	8270D	ND		1.0	0.12	ug/L	1
4-Bromophenyl phenyl ether	101-55-3	8270D	ND		1.0	0.12	ug/L	1
Butyl benzyl phthalate	85-68-7	8270D	ND		5.1	1.7	ug/L	1
Carbazole	86-74-8	8270D	ND		1.0	0.26	ug/L	1
4-Chloro-3-methyl phenol	59-50-7	8270D	ND		1.0	0.22	ug/L	1
4-Chloroaniline	106-47-8	8270D	ND		1.0	0.13	ug/L	1
bis(2-Chloroethoxy)methane	111-91-1	8270D	ND		1.0	0.13	ug/L	1
bis(2-Chloroisopropyl)ether	108-60-1	8270D	ND		1.0	0.082	ug/L	1
2-Chloronaphthalene	91-58-7	8270D	ND		1.0	0.12	ug/L	1
2-Chlorophenol	95-57-8	8270D	ND		1.0	0.13	ug/L	1
4-Chlorophenyl phenyl ether	7005-72-3	8270D	ND		1.0	0.11	ug/L	1
Chrysene	218-01-9	8270D	ND		1.0	0.12	ug/L	1
Dibenzo(a,h)anthracene	53-70-3	8270D	ND		1.0	0.13	ug/L	1
Dibenzofuran	132-64-9	8270D	ND		1.0	0.16	ug/L	1
3,3'-Dichlorobenzidine	91-94-1	8270D	ND		5.1	0.83	ug/L	1
2,4-Dichlorophenol	120-83-2	8270D	ND		1.0	0.15	ug/L	1
Diethylphthalate	84-66-2	8270D	ND		5.1	1.7	ug/L	1
Dimethyl phthalate	131-11-3	8270D	ND		5.1	1.7	ug/L	1
2,4-Dimethylphenol	105-67-9	8270D	ND		1.0	0.32	ug/L	1
Di-n-butyl phthalate	84-74-2	8270D	ND		5.1	1.7	ug/L	1
4,6-Dinitro-2-methylphenol	534-52-1	8270D	ND		5.1	1.5	ug/L	1
2,4-Dinitrophenol	51-28-5	8270D	ND		5.1	0.26	ug/L	1
2,4-Dinitrotoluene	121-14-2	8270D	ND		2.0	0.46	ug/L	1
2,6-Dinitrotoluene	606-20-2	8270D	ND		2.0	0.41	ug/L	1
Di-n-octylphthalate	117-84-0	8270D	ND		5.1	1.7	ug/L	1
bis(2-Ethylhexyl)phthalate	117-81-7	8270D	ND		5.1	1.7	ug/L	1
Fluoranthene	206-44-0	8270D	ND		1.0	0.21	ug/L	1
Fluorene	86-73-7	8270D	ND		1.0	0.10	ug/L	1
Hexachlorobenzene	118-74-1	8270D	ND		1.0	0.21	ug/L	1
Hexachlorobutadiene	87-68-3	8270D	ND		1.0	0.092	ug/L	1
Hexachlorocyclopentadiene	77-47-4	8270D	ND		5.1	0.23	ug/L	1
Hexachloroethane	67-72-1	8270D	ND		1.0	0.11	ug/L	1
Indeno(1,2,3-c,d)pyrene	193-39-5	8270D	ND		1.0	0.23	ug/L	1
Isophorone	78-59-1	8270D	ND		1.0	0.082	ug/L	1
2-Methylnaphthalene	91-57-6	8270D	ND		1.0	0.082	ug/L	1
2-Methylphenol	95-48-7	8270D	ND		1.0	0.17	ug/L	1
3 & 4-Methylphenol	106-44-5	8270D	ND		2.0	0.58	ug/L	1

PQL = Practical quantitation limit
B = Detected in the method blank
E = Quantitation of compound exceeded the calibration range
ND = Not detected at or above the MDL
J = Estimated result < PQL and ≥ MDL
P = The RPD between two GC columns exceeds 40%
Where applicable, all soil sample analysis are reported on a dry weight basis unless flagged with a "W"
N = Recovery is out of criteria
H = Out of holding time

Semivolatile Organic Compounds by GC/MS

Client: ARCADIS U.S., Inc.
Laboratory ID: MA26019-019
Description: G4MW035
Matrix: Aqueous
Date Sampled: 01/26/2011 1905
Date Received: 01/29/2011

Run	Prep Method	Analytical Method	Dilution	Analysis Date	Analyst	Prep Date	Batch
1	3520C	8270D	1	02/02/2011 1644	JGH	01/31/2011 1400	51711

Parameter	CAS Number	Analytical Method	Result	Q	PQL	MDL	Units	Run
Naphthalene	91-20-3	8270D	ND		1.0	0.071	ug/L	1
2-Nitroaniline	88-74-4	8270D	ND		2.0	0.56	ug/L	1
3-Nitroaniline	99-09-2	8270D	ND		2.0	0.79	ug/L	1
4-Nitroaniline	100-01-6	8270D	ND		2.0	0.40	ug/L	1
Nitrobenzene	98-95-3	8270D	ND		1.0	0.10	ug/L	1
2-Nitrophenol	88-75-5	8270D	ND		2.0	0.28	ug/L	1
4-Nitrophenol	100-02-7	8270D	ND		5.1	0.65	ug/L	1
N-Nitrosodi-n-propylamine	621-64-7	8270D	ND		1.0	0.082	ug/L	1
N-Nitrosodiphenylamine (Diphenylamine)	86-30-6	8270D	ND		1.0	0.39	ug/L	1
Pentachlorophenol	87-86-5	8270D	ND		5.1	0.55	ug/L	1
Phenanthrene	85-01-8	8270D	ND		1.0	0.18	ug/L	1
Phenol	108-95-2	8270D	ND		1.0	0.11	ug/L	1
Pyrene	129-00-0	8270D	ND		1.0	0.16	ug/L	1
2,4,5-Trichlorophenol	95-95-4	8270D	ND		1.0	0.18	ug/L	1
2,4,6-Trichlorophenol	88-06-2	8270D	ND		1.0	0.22	ug/L	1

Surrogate	Q	Run 1 % Recovery	Acceptance Limits
2-Fluorobiphenyl		43	37-129
2-Fluorophenol		58	24-127
Nitrobenzene-d5		52	38-127
Phenol-d5		51	28-128
Terphenyl-d14		36	10-148
2,4,6-Tribromophenol		60	41-144

PQL = Practical quantitation limit
B = Detected in the method blank
E = Quantitation of compound exceeded the calibration range
ND = Not detected at or above the MDL
J = Estimated result < PQL and ≥ MDL
P = The RPD between two GC columns exceeds 40%
Where applicable, all soil sample analysis are reported on a dry weight basis unless flagged with a "W"
N = Recovery is out of criteria
H = Out of holding time

Dissolved RCRA Metals

Client: ARCADIS U.S., Inc.
Laboratory ID: MA26019-019
Description: G4MW035
Matrix: Aqueous
Date Sampled: 01/26/2011 1905
Date Received: 01/29/2011

Run	Prep Method	Analytical Method	Dilution	Analysis Date	Analyst	Prep Date	Batch
1		7470A	1	02/01/2011 1355	BNW	02/01/2011 1020	51804
1	3005A	6010C	1	02/01/2011 2244	CDF	01/31/2011 1050	51695

Parameter	CAS Number	Analytical Method	Result	Q	PQL	MDL	Units	Run
Dissolved Arsenic	7440-38-2	6010C	ND		0.010	0.0040	mg/L	1
Dissolved Barium	7440-39-3	6010C	0.039		0.025	0.0075	mg/L	1
Dissolved Cadmium	7440-43-9	6010C	ND		0.0020	0.00060	mg/L	1
Dissolved Chromium	7440-47-3	6010C	ND		0.0050	0.0021	mg/L	1
Dissolved Lead	7439-92-1	6010C	ND		0.010	0.0019	mg/L	1
Dissolved Mercury	7439-97-6	7470A	ND		0.00010	0.000053	mg/L	1
Dissolved Selenium	7782-49-2	6010C	ND		0.010	0.0026	mg/L	1
Dissolved Silver	7440-22-4	6010C	ND		0.0050	0.00040	mg/L	1

PQL = Practical quantitation limit
B = Detected in the method blank
E = Quantitation of compound exceeded the calibration range
ND = Not detected at or above the MDL
J = Estimated result < PQL and ≥ MDL
P = The RPD between two GC columns exceeds 40%
Where applicable, all soil sample analysis are reported on a dry weight basis unless flagged with a "W"
N = Recovery is out of criteria
H = Out of holding time

RCRA Metals

Client: ARCADIS U.S., Inc.
Laboratory ID: MA26019-019
Description: G4MW035
Matrix: Aqueous
Date Sampled: 01/26/2011 1905
Date Received: 01/29/2011

Run	Prep Method	Analytical Method	Dilution	Analysis Date	Analyst	Prep Date	Batch
1		7470A	1	02/01/2011 1353	BNW	02/01/2011 1020	51804
1	3005A	6010C	1	02/01/2011 2240	CDF	01/31/2011 1050	51695

Parameter	CAS Number	Analytical Method	Result	Q	PQL	MDL	Units	Run
Arsenic	7440-38-2	6010C	ND		0.010	0.0040	mg/L	1
Barium	7440-39-3	6010C	0.042		0.025	0.0075	mg/L	1
Cadmium	7440-43-9	6010C	ND		0.0020	0.00060	mg/L	1
Chromium	7440-47-3	6010C	0.0035	J	0.0050	0.0021	mg/L	1
Lead	7439-92-1	6010C	ND		0.010	0.0019	mg/L	1
Mercury	7439-97-6	7470A	ND		0.00010	0.000053	mg/L	1
Selenium	7782-49-2	6010C	ND		0.010	0.0026	mg/L	1
Silver	7440-22-4	6010C	ND		0.0050	0.00040	mg/L	1

PQL = Practical quantitation limit
B = Detected in the method blank
E = Quantitation of compound exceeded the calibration range
ND = Not detected at or above the MDL
J = Estimated result < PQL and ≥ MDL
P = The RPD between two GC columns exceeds 40%
Where applicable, all soil sample analysis are reported on a dry weight basis unless flagged with a "W"
N = Recovery is out of criteria
H = Out of holding time

Volatile Organic Compounds by GC/MS

Client: ARCADIS U.S., Inc.
Laboratory ID: MA26019-020
Description: G4MW017
Matrix: Aqueous
Date Sampled: 01/26/2011 2005
Date Received: 01/29/2011

Run	Prep Method	Analytical Method	Dilution	Analysis Date	Analyst	Prep Date	Batch
1	5030B	8260B	1	02/01/2011 0431	DLB		52836

Parameter	CAS Number	Analytical Method	Result	Q	PQL	MDL	Units	Run
Acetone	67-64-1	8260B	ND		20	6.7	ug/L	1
Benzene	71-43-2	8260B	0.17	J	1.0	0.13	ug/L	1
Bromodichloromethane	75-27-4	8260B	ND		1.0	0.33	ug/L	1
Bromoform	75-25-2	8260B	ND		1.0	0.66	ug/L	1
Bromomethane (Methyl bromide)	74-83-9	8260B	ND		2.0	0.80	ug/L	1
2-Butanone (MEK)	78-93-3	8260B	ND		10	2.0	ug/L	1
Carbon disulfide	75-15-0	8260B	ND		1.0	0.097	ug/L	1
Carbon tetrachloride	56-23-5	8260B	ND		1.0	0.14	ug/L	1
Chlorobenzene	108-90-7	8260B	ND		2.0	0.33	ug/L	1
Chloroethane	75-00-3	8260B	ND		2.0	0.47	ug/L	1
Chloroform	67-66-3	8260B	ND		1.0	0.33	ug/L	1
Chloromethane (Methyl chloride)	74-87-3	8260B	ND		1.0	0.35	ug/L	1
Dibromochloromethane	124-48-1	8260B	ND		1.0	0.33	ug/L	1
1,4-Dichlorobenzene	106-46-7	8260B	ND		1.0	0.33	ug/L	1
1,3-Dichlorobenzene	541-73-1	8260B	ND		1.0	0.33	ug/L	1
1,2-Dichlorobenzene	95-50-1	8260B	ND		1.0	0.33	ug/L	1
1,2-Dichloroethane	107-06-2	8260B	ND		1.0	0.15	ug/L	1
1,1-Dichloroethane	75-34-3	8260B	ND		1.0	0.13	ug/L	1
trans-1,2-Dichloroethene	156-60-5	8260B	2.1		1.0	0.21	ug/L	1
cis-1,2-Dichloroethene	156-59-2	8260B	7.1		1.0	0.12	ug/L	1
1,1-Dichloroethene	75-35-4	8260B	0.28	J	1.0	0.16	ug/L	1
1,2-Dichloropropane	78-87-5	8260B	ND		1.0	0.19	ug/L	1
trans-1,3-Dichloropropene	10061-02-6	8260B	ND		1.0	0.11	ug/L	1
cis-1,3-Dichloropropene	10061-01-5	8260B	ND		1.0	0.092	ug/L	1
Ethylbenzene	100-41-4	8260B	ND		1.0	0.33	ug/L	1
2-Hexanone	591-78-6	8260B	ND		10	0.27	ug/L	1
Methyl tertiary butyl ether (MTBE)	1634-04-4	8260B	ND		1.0	0.40	ug/L	1
4-Methyl-2-pentanone	108-10-1	8260B	ND		10	0.31	ug/L	1
Methylene chloride	75-09-2	8260B	ND		1.0	0.33	ug/L	1
Styrene	100-42-5	8260B	ND		1.0	0.12	ug/L	1
1,1,2,2-Tetrachloroethane	79-34-5	8260B	ND		1.0	0.16	ug/L	1
Tetrachloroethene	127-18-4	8260B	ND		1.0	0.13	ug/L	1
Toluene	108-88-3	8260B	ND		1.0	0.33	ug/L	1
1,2,4-Trichlorobenzene	120-82-1	8260B	ND		1.0	0.51	ug/L	1
1,1,2-Trichloroethane	79-00-5	8260B	ND		1.0	0.21	ug/L	1
1,1,1-Trichloroethane	71-55-6	8260B	ND		1.0	0.074	ug/L	1
Trichloroethene	79-01-6	8260B	15		1.0	0.18	ug/L	1
Vinyl chloride	75-01-4	8260B	ND		1.0	0.054	ug/L	1
Xylenes (total)	1330-20-7	8260B	ND		1.0	0.33	ug/L	1

PQL = Practical quantitation limit
B = Detected in the method blank
E = Quantitation of compound exceeded the calibration range
ND = Not detected at or above the MDL
J = Estimated result < PQL and ≥ MDL
P = The RPD between two GC columns exceeds 40%
Where applicable, all soil sample analysis are reported on a dry weight basis unless flagged with a "W"
N = Recovery is out of criteria
H = Out of holding time

Volatile Organic Compounds by GC/MS

Client: ARCADIS U.S., Inc.
Laboratory ID: MA26019-020
Description: G4MW017
Matrix: Aqueous
Date Sampled: 01/26/2011 2005
Date Received: 01/29/2011

Surrogate	Q	Run 1 % Recovery	Acceptance Limits
1,2-Dichloroethane-d4		75	70-130
Bromofluorobenzene		88	70-130
Toluene-d8		93	70-130

PQL = Practical quantitation limit
B = Detected in the method blank
E = Quantitation of compound exceeded the calibration range
ND = Not detected at or above the MDL
J = Estimated result < PQL and ≥ MDL
P = The RPD between two GC columns exceeds 40%
Where applicable, all soil sample analysis are reported on a dry weight basis unless flagged with a "W"
N = Recovery is out of criteria
H = Out of holding time

Semivolatile Organic Compounds by GC/MS

Client: ARCADIS U.S., Inc.
Laboratory ID: MA26019-020
Description: G4MW017
Matrix: Aqueous
Date Sampled: 01/26/2011 2005
Date Received: 01/29/2011

Run	Prep Method	Analytical Method	Dilution	Analysis Date	Analyst	Prep Date	Batch
1	3520C	8270D	1	02/02/2011 1703	JGH	01/31/2011 1400	51711

Parameter	CAS Number	Analytical Method	Result	Q	PQL	MDL	Units	Run
Acenaphthene	83-32-9	8270D	ND		1.0	0.091	ug/L	1
Acenaphthylene	208-96-8	8270D	ND		1.0	0.16	ug/L	1
Anthracene	120-12-7	8270D	ND		1.0	0.13	ug/L	1
Benzo(a)anthracene	56-55-3	8270D	ND		1.0	0.15	ug/L	1
Benzo(a)pyrene	50-32-8	8270D	ND		1.0	0.16	ug/L	1
Benzo(b)fluoranthene	205-99-2	8270D	ND		1.0	0.20	ug/L	1
Benzo(g,h,i)perylene	191-24-2	8270D	ND		1.0	0.23	ug/L	1
Benzo(k)fluoranthene	207-08-9	8270D	ND		1.0	0.12	ug/L	1
4-Bromophenyl phenyl ether	101-55-3	8270D	ND		1.0	0.12	ug/L	1
Butyl benzyl phthalate	85-68-7	8270D	ND		5.1	1.7	ug/L	1
Carbazole	86-74-8	8270D	ND		1.0	0.25	ug/L	1
4-Chloro-3-methyl phenol	59-50-7	8270D	ND		1.0	0.22	ug/L	1
4-Chloroaniline	106-47-8	8270D	ND		1.0	0.13	ug/L	1
bis(2-Chloroethoxy)methane	111-91-1	8270D	ND		1.0	0.13	ug/L	1
bis(2-Chloroisopropyl)ether	108-60-1	8270D	ND		1.0	0.081	ug/L	1
2-Chloronaphthalene	91-58-7	8270D	ND		1.0	0.12	ug/L	1
2-Chlorophenol	95-57-8	8270D	ND		1.0	0.13	ug/L	1
4-Chlorophenyl phenyl ether	7005-72-3	8270D	ND		1.0	0.11	ug/L	1
Chrysene	218-01-9	8270D	ND		1.0	0.12	ug/L	1
Dibenzo(a,h)anthracene	53-70-3	8270D	ND		1.0	0.13	ug/L	1
Dibenzofuran	132-64-9	8270D	ND		1.0	0.16	ug/L	1
3,3'-Dichlorobenzidine	91-94-1	8270D	ND		5.1	0.82	ug/L	1
2,4-Dichlorophenol	120-83-2	8270D	ND		1.0	0.15	ug/L	1
Diethylphthalate	84-66-2	8270D	ND		5.1	1.7	ug/L	1
Dimethyl phthalate	131-11-3	8270D	ND		5.1	1.7	ug/L	1
2,4-Dimethylphenol	105-67-9	8270D	ND		1.0	0.31	ug/L	1
Di-n-butyl phthalate	84-74-2	8270D	ND		5.1	1.7	ug/L	1
4,6-Dinitro-2-methylphenol	534-52-1	8270D	ND		5.1	1.5	ug/L	1
2,4-Dinitrophenol	51-28-5	8270D	ND		5.1	0.25	ug/L	1
2,4-Dinitrotoluene	121-14-2	8270D	ND		2.0	0.45	ug/L	1
2,6-Dinitrotoluene	606-20-2	8270D	ND		2.0	0.40	ug/L	1
Di-n-octylphthalate	117-84-0	8270D	ND		5.1	1.7	ug/L	1
bis(2-Ethylhexyl)phthalate	117-81-7	8270D	ND		5.1	1.7	ug/L	1
Fluoranthene	206-44-0	8270D	ND		1.0	0.21	ug/L	1
Fluorene	86-73-7	8270D	ND		1.0	0.10	ug/L	1
Hexachlorobenzene	118-74-1	8270D	ND		1.0	0.21	ug/L	1
Hexachlorobutadiene	87-68-3	8270D	ND		1.0	0.091	ug/L	1
Hexachlorocyclopentadiene	77-47-4	8270D	ND		5.1	0.23	ug/L	1
Hexachloroethane	67-72-1	8270D	ND		1.0	0.11	ug/L	1
Indeno(1,2,3-c,d)pyrene	193-39-5	8270D	ND		1.0	0.23	ug/L	1
Isophorone	78-59-1	8270D	ND		1.0	0.081	ug/L	1
2-Methylnaphthalene	91-57-6	8270D	ND		1.0	0.081	ug/L	1
2-Methylphenol	95-48-7	8270D	ND		1.0	0.17	ug/L	1
3 & 4-Methylphenol	106-44-5	8270D	ND		2.0	0.58	ug/L	1

PQL = Practical quantitation limit
B = Detected in the method blank
E = Quantitation of compound exceeded the calibration range
ND = Not detected at or above the MDL
J = Estimated result < PQL and ≥ MDL
P = The RPD between two GC columns exceeds 40%
Where applicable, all soil sample analysis are reported on a dry weight basis unless flagged with a "W"
N = Recovery is out of criteria
H = Out of holding time

Semivolatile Organic Compounds by GC/MS

Client: ARCADIS U.S., Inc.
Laboratory ID: MA26019-020
Description: G4MW017
Matrix: Aqueous
Date Sampled: 01/26/2011 2005
Date Received: 01/29/2011

Run	Prep Method	Analytical Method	Dilution	Analysis Date	Analyst	Prep Date	Batch
1	3520C	8270D	1	02/02/2011 1703	JGH	01/31/2011 1400	51711

Parameter	CAS Number	Analytical Method	Result	Q	PQL	MDL	Units	Run
Naphthalene	91-20-3	8270D	ND		1.0	0.071	ug/L	1
2-Nitroaniline	88-74-4	8270D	ND		2.0	0.56	ug/L	1
3-Nitroaniline	99-09-2	8270D	ND		2.0	0.78	ug/L	1
4-Nitroaniline	100-01-6	8270D	ND		2.0	0.39	ug/L	1
Nitrobenzene	98-95-3	8270D	ND		1.0	0.10	ug/L	1
2-Nitrophenol	88-75-5	8270D	ND		2.0	0.27	ug/L	1
4-Nitrophenol	100-02-7	8270D	ND		5.1	0.65	ug/L	1
N-Nitrosodi-n-propylamine	621-64-7	8270D	ND		1.0	0.081	ug/L	1
N-Nitrosodiphenylamine (Diphenylamine)	86-30-6	8270D	ND		1.0	0.38	ug/L	1
Pentachlorophenol	87-86-5	8270D	ND		5.1	0.55	ug/L	1
Phenanthrene	85-01-8	8270D	ND		1.0	0.18	ug/L	1
Phenol	108-95-2	8270D	ND		1.0	0.11	ug/L	1
Pyrene	129-00-0	8270D	ND		1.0	0.16	ug/L	1
2,4,5-Trichlorophenol	95-95-4	8270D	ND		1.0	0.18	ug/L	1
2,4,6-Trichlorophenol	88-06-2	8270D	ND		1.0	0.22	ug/L	1

Surrogate	Q	Run 1 % Recovery	Acceptance Limits
2-Fluorobiphenyl		39	37-129
2-Fluorophenol		55	24-127
Nitrobenzene-d5		46	38-127
Phenol-d5		45	28-128
Terphenyl-d14		53	10-148
2,4,6-Tribromophenol		60	41-144

PQL = Practical quantitation limit
B = Detected in the method blank
E = Quantitation of compound exceeded the calibration range
ND = Not detected at or above the MDL
J = Estimated result < PQL and ≥ MDL
P = The RPD between two GC columns exceeds 40%
Where applicable, all soil sample analysis are reported on a dry weight basis unless flagged with a "W"
N = Recovery is out of criteria
H = Out of holding time

Dissolved RCRA Metals

Client: ARCADIS U.S., Inc.
Laboratory ID: MA26019-020
Description: G4MW017
Matrix: Aqueous
Date Sampled: 01/26/2011 2005
Date Received: 01/29/2011

Run	Prep Method	Analytical Method	Dilution	Analysis Date	Analyst	Prep Date	Batch
1		7470A	1	02/01/2011 1400	BNW	02/01/2011 1020	51804
1	3005A	6010C	1	02/01/2011 2252	CDF	01/31/2011 1050	51695

Parameter	CAS Number	Analytical Method	Result	Q	PQL	MDL	Units	Run
Dissolved Arsenic	7440-38-2	6010C	ND		0.010	0.0040	mg/L	1
Dissolved Barium	7440-39-3	6010C	0.086		0.025	0.0075	mg/L	1
Dissolved Cadmium	7440-43-9	6010C	ND		0.0020	0.00060	mg/L	1
Dissolved Chromium	7440-47-3	6010C	0.0024	J	0.0050	0.0021	mg/L	1
Dissolved Lead	7439-92-1	6010C	ND		0.010	0.0019	mg/L	1
Dissolved Mercury	7439-97-6	7470A	ND		0.00010	0.000053	mg/L	1
Dissolved Selenium	7782-49-2	6010C	ND		0.010	0.0026	mg/L	1
Dissolved Silver	7440-22-4	6010C	ND		0.0050	0.00040	mg/L	1

PQL = Practical quantitation limit
B = Detected in the method blank
E = Quantitation of compound exceeded the calibration range
ND = Not detected at or above the MDL
J = Estimated result < PQL and ≥ MDL
P = The RPD between two GC columns exceeds 40%
Where applicable, all soil sample analysis are reported on a dry weight basis unless flagged with a "W"
N = Recovery is out of criteria
H = Out of holding time

RCRA Metals

Client: ARCADIS U.S., Inc.
Laboratory ID: MA26019-020
Description: G4MW017
Matrix: Aqueous
Date Sampled: 01/26/2011 2005
Date Received: 01/29/2011

Run	Prep Method	Analytical Method	Dilution	Analysis Date	Analyst	Prep Date	Batch
1		7470A	1	02/01/2011 1358	BNW	02/01/2011 1020	51804
1	3005A	6010C	1	02/01/2011 2248	CDF	01/31/2011 1050	51695

Parameter	CAS Number	Analytical Method	Result	Q	PQL	MDL	Units	Run
Arsenic	7440-38-2	6010C	ND		0.010	0.0040	mg/L	1
Barium	7440-39-3	6010C	0.081		0.025	0.0075	mg/L	1
Cadmium	7440-43-9	6010C	ND		0.0020	0.00060	mg/L	1
Chromium	7440-47-3	6010C	0.0021	J	0.0050	0.0021	mg/L	1
Lead	7439-92-1	6010C	ND		0.010	0.0019	mg/L	1
Mercury	7439-97-6	7470A	ND		0.00010	0.000053	mg/L	1
Selenium	7782-49-2	6010C	ND		0.010	0.0026	mg/L	1
Silver	7440-22-4	6010C	ND		0.0050	0.00040	mg/L	1

PQL = Practical quantitation limit
B = Detected in the method blank
E = Quantitation of compound exceeded the calibration range
ND = Not detected at or above the MDL
J = Estimated result < PQL and ≥ MDL
P = The RPD between two GC columns exceeds 40%
Where applicable, all soil sample analysis are reported on a dry weight basis unless flagged with a "W"
N = Recovery is out of criteria
H = Out of holding time

Volatile Organic Compounds by GC/MS

Client: ARCADIS U.S., Inc.
Laboratory ID: MA26019-021
Description: G4MW043
Matrix: Aqueous
Date Sampled: 01/27/2011 1040
Date Received: 01/29/2011

Run	Prep Method	Analytical Method	Dilution	Analysis Date	Analyst	Prep Date	Batch
1	5030B	8260B	1	02/01/2011 0453	DLB		52836

Parameter	CAS Number	Analytical Method	Result	Q	PQL	MDL	Units	Run
Acetone	67-64-1	8260B	ND		20	6.7	ug/L	1
Benzene	71-43-2	8260B	ND		1.0	0.13	ug/L	1
Bromodichloromethane	75-27-4	8260B	ND		1.0	0.33	ug/L	1
Bromoform	75-25-2	8260B	ND		1.0	0.66	ug/L	1
Bromomethane (Methyl bromide)	74-83-9	8260B	ND		2.0	0.80	ug/L	1
2-Butanone (MEK)	78-93-3	8260B	ND		10	2.0	ug/L	1
Carbon disulfide	75-15-0	8260B	0.38	J	1.0	0.097	ug/L	1
Carbon tetrachloride	56-23-5	8260B	ND		1.0	0.14	ug/L	1
Chlorobenzene	108-90-7	8260B	ND		2.0	0.33	ug/L	1
Chloroethane	75-00-3	8260B	ND		2.0	0.47	ug/L	1
Chloroform	67-66-3	8260B	ND		1.0	0.33	ug/L	1
Chloromethane (Methyl chloride)	74-87-3	8260B	ND		1.0	0.35	ug/L	1
Dibromochloromethane	124-48-1	8260B	ND		1.0	0.33	ug/L	1
1,4-Dichlorobenzene	106-46-7	8260B	ND		1.0	0.33	ug/L	1
1,3-Dichlorobenzene	541-73-1	8260B	ND		1.0	0.33	ug/L	1
1,2-Dichlorobenzene	95-50-1	8260B	ND		1.0	0.33	ug/L	1
1,2-Dichloroethane	107-06-2	8260B	ND		1.0	0.15	ug/L	1
1,1-Dichloroethane	75-34-3	8260B	ND		1.0	0.13	ug/L	1
trans-1,2-Dichloroethene	156-60-5	8260B	0.47	J	1.0	0.21	ug/L	1
cis-1,2-Dichloroethene	156-59-2	8260B	1.7		1.0	0.12	ug/L	1
1,1-Dichloroethene	75-35-4	8260B	0.16	J	1.0	0.16	ug/L	1
1,2-Dichloropropane	78-87-5	8260B	ND		1.0	0.19	ug/L	1
trans-1,3-Dichloropropene	10061-02-6	8260B	ND		1.0	0.11	ug/L	1
cis-1,3-Dichloropropene	10061-01-5	8260B	ND		1.0	0.092	ug/L	1
Ethylbenzene	100-41-4	8260B	ND		1.0	0.33	ug/L	1
2-Hexanone	591-78-6	8260B	ND		10	0.27	ug/L	1
Methyl tertiary butyl ether (MTBE)	1634-04-4	8260B	ND		1.0	0.40	ug/L	1
4-Methyl-2-pentanone	108-10-1	8260B	ND		10	0.31	ug/L	1
Methylene chloride	75-09-2	8260B	ND		1.0	0.33	ug/L	1
Styrene	100-42-5	8260B	ND		1.0	0.12	ug/L	1
1,1,2,2-Tetrachloroethane	79-34-5	8260B	ND		1.0	0.16	ug/L	1
Tetrachloroethene	127-18-4	8260B	ND		1.0	0.13	ug/L	1
Toluene	108-88-3	8260B	ND		1.0	0.33	ug/L	1
1,2,4-Trichlorobenzene	120-82-1	8260B	ND		1.0	0.51	ug/L	1
1,1,2-Trichloroethane	79-00-5	8260B	ND		1.0	0.21	ug/L	1
1,1,1-Trichloroethane	71-55-6	8260B	ND		1.0	0.074	ug/L	1
Trichloroethene	79-01-6	8260B	1.4		1.0	0.18	ug/L	1
Vinyl chloride	75-01-4	8260B	ND		1.0	0.054	ug/L	1
Xylenes (total)	1330-20-7	8260B	ND		1.0	0.33	ug/L	1

PQL = Practical quantitation limit
B = Detected in the method blank
E = Quantitation of compound exceeded the calibration range
ND = Not detected at or above the MDL
J = Estimated result < PQL and ≥ MDL
P = The RPD between two GC columns exceeds 40%
Where applicable, all soil sample analysis are reported on a dry weight basis unless flagged with a "W"
N = Recovery is out of criteria
H = Out of holding time

Volatile Organic Compounds by GC/MS

Client: ARCADIS U.S., Inc.
Laboratory ID: MA26019-021
Description: G4MW043
Matrix: Aqueous
Date Sampled: 01/27/2011 1040
Date Received: 01/29/2011

Surrogate	Q	Run 1 % Recovery	Acceptance Limits
1,2-Dichloroethane-d4		76	70-130
Bromofluorobenzene		89	70-130
Toluene-d8		94	70-130

PQL = Practical quantitation limit
B = Detected in the method blank
E = Quantitation of compound exceeded the calibration range
ND = Not detected at or above the MDL
J = Estimated result < PQL and ≥ MDL
P = The RPD between two GC columns exceeds 40%
Where applicable, all soil sample analysis are reported on a dry weight basis unless flagged with a "W"
N = Recovery is out of criteria
H = Out of holding time

Semivolatile Organic Compounds by GC/MS

Client: ARCADIS U.S., Inc.
Laboratory ID: MA26019-021
Description: G4MW043
Matrix: Aqueous
Date Sampled: 01/27/2011 1040
Date Received: 01/29/2011

Run	Prep Method	Analytical Method	Dilution	Analysis Date	Analyst	Prep Date	Batch
1	3520C	8270D	1	02/02/2011 1931	JGH	01/31/2011 1400	51711

Parameter	CAS Number	Analytical Method	Result	Q	PQL	MDL	Units	Run
Acenaphthene	83-32-9	8270D	ND		1.0	0.092	ug/L	1
Acenaphthylene	208-96-8	8270D	ND		1.0	0.16	ug/L	1
Anthracene	120-12-7	8270D	ND		1.0	0.13	ug/L	1
Benzo(a)anthracene	56-55-3	8270D	ND		1.0	0.15	ug/L	1
Benzo(a)pyrene	50-32-8	8270D	ND		1.0	0.16	ug/L	1
Benzo(b)fluoranthene	205-99-2	8270D	ND		1.0	0.20	ug/L	1
Benzo(g,h,i)perylene	191-24-2	8270D	ND		1.0	0.23	ug/L	1
Benzo(k)fluoranthene	207-08-9	8270D	ND		1.0	0.12	ug/L	1
4-Bromophenyl phenyl ether	101-55-3	8270D	ND		1.0	0.12	ug/L	1
Butyl benzyl phthalate	85-68-7	8270D	ND		5.1	1.7	ug/L	1
Carbazole	86-74-8	8270D	ND		1.0	0.26	ug/L	1
4-Chloro-3-methyl phenol	59-50-7	8270D	ND		1.0	0.22	ug/L	1
4-Chloroaniline	106-47-8	8270D	ND		1.0	0.13	ug/L	1
bis(2-Chloroethoxy)methane	111-91-1	8270D	ND		1.0	0.13	ug/L	1
bis(2-Chloroisopropyl)ether	108-60-1	8270D	ND		1.0	0.082	ug/L	1
2-Chloronaphthalene	91-58-7	8270D	ND		1.0	0.12	ug/L	1
2-Chlorophenol	95-57-8	8270D	ND		1.0	0.13	ug/L	1
4-Chlorophenyl phenyl ether	7005-72-3	8270D	ND		1.0	0.11	ug/L	1
Chrysene	218-01-9	8270D	ND		1.0	0.12	ug/L	1
Dibenzo(a,h)anthracene	53-70-3	8270D	ND		1.0	0.13	ug/L	1
Dibenzofuran	132-64-9	8270D	ND		1.0	0.16	ug/L	1
3,3'-Dichlorobenzidine	91-94-1	8270D	ND		5.1	0.83	ug/L	1
2,4-Dichlorophenol	120-83-2	8270D	ND		1.0	0.15	ug/L	1
Diethylphthalate	84-66-2	8270D	ND		5.1	1.7	ug/L	1
Dimethyl phthalate	131-11-3	8270D	ND		5.1	1.7	ug/L	1
2,4-Dimethylphenol	105-67-9	8270D	ND		1.0	0.32	ug/L	1
Di-n-butyl phthalate	84-74-2	8270D	ND		5.1	1.7	ug/L	1
4,6-Dinitro-2-methylphenol	534-52-1	8270D	ND		5.1	1.5	ug/L	1
2,4-Dinitrophenol	51-28-5	8270D	ND		5.1	0.26	ug/L	1
2,4-Dinitrotoluene	121-14-2	8270D	ND		2.0	0.46	ug/L	1
2,6-Dinitrotoluene	606-20-2	8270D	ND		2.0	0.41	ug/L	1
Di-n-octylphthalate	117-84-0	8270D	ND		5.1	1.7	ug/L	1
bis(2-Ethylhexyl)phthalate	117-81-7	8270D	ND		5.1	1.7	ug/L	1
Fluoranthene	206-44-0	8270D	ND		1.0	0.21	ug/L	1
Fluorene	86-73-7	8270D	ND		1.0	0.10	ug/L	1
Hexachlorobenzene	118-74-1	8270D	ND		1.0	0.21	ug/L	1
Hexachlorobutadiene	87-68-3	8270D	ND		1.0	0.092	ug/L	1
Hexachlorocyclopentadiene	77-47-4	8270D	ND		5.1	0.23	ug/L	1
Hexachloroethane	67-72-1	8270D	ND		1.0	0.11	ug/L	1
Indeno(1,2,3-c,d)pyrene	193-39-5	8270D	ND		1.0	0.23	ug/L	1
Isophorone	78-59-1	8270D	ND		1.0	0.082	ug/L	1
2-Methylnaphthalene	91-57-6	8270D	ND		1.0	0.082	ug/L	1
2-Methylphenol	95-48-7	8270D	ND		1.0	0.17	ug/L	1
3 & 4-Methylphenol	106-44-5	8270D	ND		2.0	0.58	ug/L	1

PQL = Practical quantitation limit
B = Detected in the method blank
E = Quantitation of compound exceeded the calibration range
ND = Not detected at or above the MDL
J = Estimated result < PQL and ≥ MDL
P = The RPD between two GC columns exceeds 40%
Where applicable, all soil sample analysis are reported on a dry weight basis unless flagged with a "W"
N = Recovery is out of criteria
H = Out of holding time

Semivolatile Organic Compounds by GC/MS

Client: ARCADIS U.S., Inc.
Laboratory ID: MA26019-021
Description: G4MW043
Matrix: Aqueous
Date Sampled: 01/27/2011 1040
Date Received: 01/29/2011

Run	Prep Method	Analytical Method	Dilution	Analysis Date	Analyst	Prep Date	Batch
1	3520C	8270D	1	02/02/2011 1931	JGH	01/31/2011 1400	51711

Parameter	CAS Number	Analytical Method	Result	Q	PQL	MDL	Units	Run
Naphthalene	91-20-3	8270D	ND		1.0	0.071	ug/L	1
2-Nitroaniline	88-74-4	8270D	ND		2.0	0.56	ug/L	1
3-Nitroaniline	99-09-2	8270D	ND		2.0	0.79	ug/L	1
4-Nitroaniline	100-01-6	8270D	ND		2.0	0.40	ug/L	1
Nitrobenzene	98-95-3	8270D	ND		1.0	0.10	ug/L	1
2-Nitrophenol	88-75-5	8270D	ND		2.0	0.28	ug/L	1
4-Nitrophenol	100-02-7	8270D	ND		5.1	0.65	ug/L	1
N-Nitrosodi-n-propylamine	621-64-7	8270D	ND		1.0	0.082	ug/L	1
N-Nitrosodiphenylamine (Diphenylamine)	86-30-6	8270D	ND		1.0	0.39	ug/L	1
Pentachlorophenol	87-86-5	8270D	ND		5.1	0.55	ug/L	1
Phenanthrene	85-01-8	8270D	ND		1.0	0.18	ug/L	1
Phenol	108-95-2	8270D	ND		1.0	0.11	ug/L	1
Pyrene	129-00-0	8270D	ND		1.0	0.16	ug/L	1
2,4,5-Trichlorophenol	95-95-4	8270D	ND		1.0	0.18	ug/L	1
2,4,6-Trichlorophenol	88-06-2	8270D	ND		1.0	0.22	ug/L	1

Surrogate	Q	Run 1 % Recovery	Acceptance Limits
2-Fluorobiphenyl		45	37-129
2-Fluorophenol		61	24-127
Nitrobenzene-d5		57	38-127
Phenol-d5		58	28-128
Terphenyl-d14		37	10-148
2,4,6-Tribromophenol		64	41-144

PQL = Practical quantitation limit
B = Detected in the method blank
E = Quantitation of compound exceeded the calibration range
ND = Not detected at or above the MDL
J = Estimated result < PQL and ≥ MDL
P = The RPD between two GC columns exceeds 40%
Where applicable, all soil sample analysis are reported on a dry weight basis unless flagged with a "W"
N = Recovery is out of criteria
H = Out of holding time

Dissolved RCRA Metals

Client: ARCADIS U.S., Inc.
Laboratory ID: MA26019-021
Description: G4MW043
Matrix: Aqueous
Date Sampled: 01/27/2011 1040
Date Received: 01/29/2011

Run	Prep Method	Analytical Method	Dilution	Analysis Date	Analyst	Prep Date	Batch
1		7470A	1	02/01/2011 1415	BNW	02/01/2011 1020	51804
1	3005A	6010C	1	02/01/2011 2318	CDF	01/31/2011 1050	51695

Parameter	CAS Number	Analytical Method	Result	Q	PQL	MDL	Units	Run
Dissolved Arsenic	7440-38-2	6010C	ND		0.010	0.0040	mg/L	1
Dissolved Barium	7440-39-3	6010C	0.092		0.025	0.0075	mg/L	1
Dissolved Cadmium	7440-43-9	6010C	ND		0.0020	0.00060	mg/L	1
Dissolved Chromium	7440-47-3	6010C	ND		0.0050	0.0021	mg/L	1
Dissolved Lead	7439-92-1	6010C	ND		0.010	0.0019	mg/L	1
Dissolved Mercury	7439-97-6	7470A	ND		0.00010	0.000053	mg/L	1
Dissolved Selenium	7782-49-2	6010C	ND		0.010	0.0026	mg/L	1
Dissolved Silver	7440-22-4	6010C	ND		0.0050	0.00040	mg/L	1

PQL = Practical quantitation limit
B = Detected in the method blank
E = Quantitation of compound exceeded the calibration range
ND = Not detected at or above the MDL
J = Estimated result < PQL and ≥ MDL
P = The RPD between two GC columns exceeds 40%
Where applicable, all soil sample analysis are reported on a dry weight basis unless flagged with a "W"
N = Recovery is out of criteria
H = Out of holding time

RCRA Metals

Client: ARCADIS U.S., Inc.
Laboratory ID: MA26019-021
Description: G4MW043
Matrix: Aqueous
Date Sampled: 01/27/2011 1040
Date Received: 01/29/2011

Run	Prep Method	Analytical Method	Dilution	Analysis Date	Analyst	Prep Date	Batch
1		7470A	1	02/01/2011 1402	BNW	02/01/2011 1020	51804
1	3005A	6010C	1	02/01/2011 2255	CDF	01/31/2011 1050	51695

Parameter	CAS Number	Analytical Method	Result	Q	PQL	MDL	Units	Run
Arsenic	7440-38-2	6010C	ND		0.010	0.0040	mg/L	1
Barium	7440-39-3	6010C	0.087		0.025	0.0075	mg/L	1
Cadmium	7440-43-9	6010C	ND		0.0020	0.00060	mg/L	1
Chromium	7440-47-3	6010C	ND		0.0050	0.0021	mg/L	1
Lead	7439-92-1	6010C	ND		0.010	0.0019	mg/L	1
Mercury	7439-97-6	7470A	ND		0.00010	0.000053	mg/L	1
Selenium	7782-49-2	6010C	ND		0.010	0.0026	mg/L	1
Silver	7440-22-4	6010C	ND		0.0050	0.00040	mg/L	1

PQL = Practical quantitation limit
B = Detected in the method blank
E = Quantitation of compound exceeded the calibration range
ND = Not detected at or above the MDL
J = Estimated result < PQL and ≥ MDL
P = The RPD between two GC columns exceeds 40%
Where applicable, all soil sample analysis are reported on a dry weight basis unless flagged with a "W"
N = Recovery is out of criteria
H = Out of holding time

Volatile Organic Compounds by GC/MS

Client: ARCADIS U.S., Inc.
Laboratory ID: MA26019-022
Description: G4MW037
Matrix: Aqueous
Date Sampled: 01/27/2011 1210
Date Received: 01/29/2011

Run	Prep Method	Analytical Method	Dilution	Analysis Date	Analyst	Prep Date	Batch
1	5030B	8260B	1	02/01/2011 0514	DLB		52836

Parameter	CAS Number	Analytical Method	Result	Q	PQL	MDL	Units	Run
Acetone	67-64-1	8260B	ND		20	6.7	ug/L	1
Benzene	71-43-2	8260B	2.1		1.0	0.13	ug/L	1
Bromodichloromethane	75-27-4	8260B	ND		1.0	0.33	ug/L	1
Bromoform	75-25-2	8260B	ND		1.0	0.66	ug/L	1
Bromomethane (Methyl bromide)	74-83-9	8260B	ND		2.0	0.80	ug/L	1
2-Butanone (MEK)	78-93-3	8260B	ND		10	2.0	ug/L	1
Carbon disulfide	75-15-0	8260B	ND		1.0	0.097	ug/L	1
Carbon tetrachloride	56-23-5	8260B	ND		1.0	0.14	ug/L	1
Chlorobenzene	108-90-7	8260B	ND		2.0	0.33	ug/L	1
Chloroethane	75-00-3	8260B	ND		2.0	0.47	ug/L	1
Chloroform	67-66-3	8260B	ND		1.0	0.33	ug/L	1
Chloromethane (Methyl chloride)	74-87-3	8260B	ND		1.0	0.35	ug/L	1
Dibromochloromethane	124-48-1	8260B	ND		1.0	0.33	ug/L	1
1,4-Dichlorobenzene	106-46-7	8260B	ND		1.0	0.33	ug/L	1
1,3-Dichlorobenzene	541-73-1	8260B	ND		1.0	0.33	ug/L	1
1,2-Dichlorobenzene	95-50-1	8260B	ND		1.0	0.33	ug/L	1
1,2-Dichloroethane	107-06-2	8260B	ND		1.0	0.15	ug/L	1
1,1-Dichloroethane	75-34-3	8260B	ND		1.0	0.13	ug/L	1
trans-1,2-Dichloroethene	156-60-5	8260B	ND		1.0	0.21	ug/L	1
cis-1,2-Dichloroethene	156-59-2	8260B	ND		1.0	0.12	ug/L	1
1,1-Dichloroethene	75-35-4	8260B	ND		1.0	0.16	ug/L	1
1,2-Dichloropropane	78-87-5	8260B	ND		1.0	0.19	ug/L	1
trans-1,3-Dichloropropene	10061-02-6	8260B	ND		1.0	0.11	ug/L	1
cis-1,3-Dichloropropene	10061-01-5	8260B	ND		1.0	0.092	ug/L	1
Ethylbenzene	100-41-4	8260B	ND		1.0	0.33	ug/L	1
2-Hexanone	591-78-6	8260B	ND		10	0.27	ug/L	1
Methyl tertiary butyl ether (MTBE)	1634-04-4	8260B	ND		1.0	0.40	ug/L	1
4-Methyl-2-pentanone	108-10-1	8260B	ND		10	0.31	ug/L	1
Methylene chloride	75-09-2	8260B	ND		1.0	0.33	ug/L	1
Styrene	100-42-5	8260B	ND		1.0	0.12	ug/L	1
1,1,2,2-Tetrachloroethane	79-34-5	8260B	ND		1.0	0.16	ug/L	1
Tetrachloroethene	127-18-4	8260B	ND		1.0	0.13	ug/L	1
Toluene	108-88-3	8260B	ND		1.0	0.33	ug/L	1
1,2,4-Trichlorobenzene	120-82-1	8260B	ND		1.0	0.51	ug/L	1
1,1,2-Trichloroethane	79-00-5	8260B	ND		1.0	0.21	ug/L	1
1,1,1-Trichloroethane	71-55-6	8260B	ND		1.0	0.074	ug/L	1
Trichloroethene	79-01-6	8260B	ND		1.0	0.18	ug/L	1
Vinyl chloride	75-01-4	8260B	ND		1.0	0.054	ug/L	1
Xylenes (total)	1330-20-7	8260B	ND		1.0	0.33	ug/L	1

PQL = Practical quantitation limit
B = Detected in the method blank
E = Quantitation of compound exceeded the calibration range
ND = Not detected at or above the MDL
J = Estimated result < PQL and ≥ MDL
P = The RPD between two GC columns exceeds 40%
Where applicable, all soil sample analysis are reported on a dry weight basis unless flagged with a "W"
N = Recovery is out of criteria
H = Out of holding time

Volatile Organic Compounds by GC/MS

Client: ARCADIS U.S., Inc.
Laboratory ID: MA26019-022
Description: G4MW037
Matrix: Aqueous
Date Sampled: 01/27/2011 1210
Date Received: 01/29/2011

Surrogate	Q	Run 1 % Recovery	Acceptance Limits
1,2-Dichloroethane-d4		74	70-130
Bromofluorobenzene		85	70-130
Toluene-d8		91	70-130

PQL = Practical quantitation limit
B = Detected in the method blank
E = Quantitation of compound exceeded the calibration range
ND = Not detected at or above the MDL
J = Estimated result < PQL and ≥ MDL
P = The RPD between two GC columns exceeds 40%
Where applicable, all soil sample analysis are reported on a dry weight basis unless flagged with a "W"
N = Recovery is out of criteria
H = Out of holding time

Semivolatile Organic Compounds by GC/MS

Client: ARCADIS U.S., Inc.
Laboratory ID: MA26019-022
Description: G4MW037
Matrix: Aqueous
Date Sampled: 01/27/2011 1210
Date Received: 01/29/2011

Run	Prep Method	Analytical Method	Dilution	Analysis Date	Analyst	Prep Date	Batch
1	3520C	8270D	1	02/04/2011 0021	WD	01/31/2011 1400	51711

Parameter	CAS Number	Analytical Method	Result	Q	PQL	MDL	Units	Run
Acenaphthene	83-32-9	8270D	ND		1.0	0.093	ug/L	1
Acenaphthylene	208-96-8	8270D	ND		1.0	0.16	ug/L	1
Anthracene	120-12-7	8270D	ND		1.0	0.13	ug/L	1
Benzo(a)anthracene	56-55-3	8270D	ND		1.0	0.15	ug/L	1
Benzo(a)pyrene	50-32-8	8270D	ND		1.0	0.16	ug/L	1
Benzo(b)fluoranthene	205-99-2	8270D	ND		1.0	0.21	ug/L	1
Benzo(g,h,i)perylene	191-24-2	8270D	ND		1.0	0.24	ug/L	1
Benzo(k)fluoranthene	207-08-9	8270D	ND		1.0	0.12	ug/L	1
4-Bromophenyl phenyl ether	101-55-3	8270D	ND		1.0	0.12	ug/L	1
Butyl benzyl phthalate	85-68-7	8270D	ND		5.2	1.8	ug/L	1
Carbazole	86-74-8	8270D	ND		1.0	0.26	ug/L	1
4-Chloro-3-methyl phenol	59-50-7	8270D	ND		1.0	0.23	ug/L	1
4-Chloroaniline	106-47-8	8270D	ND		1.0	0.13	ug/L	1
bis(2-Chloroethoxy)methane	111-91-1	8270D	ND		1.0	0.13	ug/L	1
bis(2-Chloroisopropyl)ether	108-60-1	8270D	ND		1.0	0.082	ug/L	1
2-Chloronaphthalene	91-58-7	8270D	ND		1.0	0.12	ug/L	1
2-Chlorophenol	95-57-8	8270D	ND		1.0	0.13	ug/L	1
4-Chlorophenyl phenyl ether	7005-72-3	8270D	ND		1.0	0.11	ug/L	1
Chrysene	218-01-9	8270D	ND		1.0	0.12	ug/L	1
Dibenzo(a,h)anthracene	53-70-3	8270D	ND		1.0	0.13	ug/L	1
Dibenzofuran	132-64-9	8270D	ND		1.0	0.16	ug/L	1
3,3'-Dichlorobenzidine	91-94-1	8270D	ND		5.2	0.84	ug/L	1
2,4-Dichlorophenol	120-83-2	8270D	ND		1.0	0.15	ug/L	1
Diethylphthalate	84-66-2	8270D	ND		5.2	1.8	ug/L	1
Dimethyl phthalate	131-11-3	8270D	ND		5.2	1.8	ug/L	1
2,4-Dimethylphenol	105-67-9	8270D	ND		1.0	0.32	ug/L	1
Di-n-butyl phthalate	84-74-2	8270D	ND		5.2	1.8	ug/L	1
4,6-Dinitro-2-methylphenol	534-52-1	8270D	ND		5.2	1.5	ug/L	1
2,4-Dinitrophenol	51-28-5	8270D	ND		5.2	0.26	ug/L	1
2,4-Dinitrotoluene	121-14-2	8270D	ND		2.1	0.46	ug/L	1
2,6-Dinitrotoluene	606-20-2	8270D	ND		2.1	0.41	ug/L	1
Di-n-octylphthalate	117-84-0	8270D	ND		5.2	1.8	ug/L	1
bis(2-Ethylhexyl)phthalate	117-81-7	8270D	ND		5.2	1.8	ug/L	1
Fluoranthene	206-44-0	8270D	ND		1.0	0.22	ug/L	1
Fluorene	86-73-7	8270D	ND		1.0	0.10	ug/L	1
Hexachlorobenzene	118-74-1	8270D	ND		1.0	0.22	ug/L	1
Hexachlorobutadiene	87-68-3	8270D	ND		1.0	0.093	ug/L	1
Hexachlorocyclopentadiene	77-47-4	8270D	ND		5.2	0.24	ug/L	1
Hexachloroethane	67-72-1	8270D	ND		1.0	0.11	ug/L	1
Indeno(1,2,3-c,d)pyrene	193-39-5	8270D	ND		1.0	0.24	ug/L	1
Isophorone	78-59-1	8270D	ND		1.0	0.082	ug/L	1
2-Methylnaphthalene	91-57-6	8270D	ND		1.0	0.082	ug/L	1
2-Methylphenol	95-48-7	8270D	ND		1.0	0.18	ug/L	1
3 & 4-Methylphenol	106-44-5	8270D	ND		2.1	0.59	ug/L	1

PQL = Practical quantitation limit
B = Detected in the method blank
E = Quantitation of compound exceeded the calibration range
ND = Not detected at or above the MDL
J = Estimated result < PQL and ≥ MDL
P = The RPD between two GC columns exceeds 40%
Where applicable, all soil sample analysis are reported on a dry weight basis unless flagged with a "W"
N = Recovery is out of criteria
H = Out of holding time

Semivolatile Organic Compounds by GC/MS

Client: ARCADIS U.S., Inc.
Laboratory ID: MA26019-022
Description: G4MW037
Matrix: Aqueous
Date Sampled: 01/27/2011 1210
Date Received: 01/29/2011

Run	Prep Method	Analytical Method	Dilution	Analysis Date	Analyst	Prep Date	Batch
1	3520C	8270D	1	02/04/2011 0021	WD	01/31/2011 1400	51711

Parameter	CAS Number	Analytical Method	Result	Q	PQL	MDL	Units	Run
Naphthalene	91-20-3	8270D	ND		1.0	0.072	ug/L	1
2-Nitroaniline	88-74-4	8270D	ND		2.1	0.57	ug/L	1
3-Nitroaniline	99-09-2	8270D	ND		2.1	0.79	ug/L	1
4-Nitroaniline	100-01-6	8270D	ND		2.1	0.40	ug/L	1
Nitrobenzene	98-95-3	8270D	ND		1.0	0.10	ug/L	1
2-Nitrophenol	88-75-5	8270D	ND		2.1	0.28	ug/L	1
4-Nitrophenol	100-02-7	8270D	ND		5.2	0.66	ug/L	1
N-Nitrosodi-n-propylamine	621-64-7	8270D	ND		1.0	0.082	ug/L	1
N-Nitrosodiphenylamine (Diphenylamine)	86-30-6	8270D	ND		1.0	0.39	ug/L	1
Pentachlorophenol	87-86-5	8270D	ND		5.2	0.56	ug/L	1
Phenanthrene	85-01-8	8270D	ND		1.0	0.19	ug/L	1
Phenol	108-95-2	8270D	ND		1.0	0.11	ug/L	1
Pyrene	129-00-0	8270D	ND		1.0	0.16	ug/L	1
2,4,5-Trichlorophenol	95-95-4	8270D	ND		1.0	0.19	ug/L	1
2,4,6-Trichlorophenol	88-06-2	8270D	ND		1.0	0.23	ug/L	1

Surrogate	Q	Run 1 % Recovery	Acceptance Limits
2-Fluorobiphenyl		51	37-129
2-Fluorophenol		48	24-127
Nitrobenzene-d5		53	38-127
Phenol-d5		43	28-128
Terphenyl-d14		47	10-148
2,4,6-Tribromophenol		61	41-144

PQL = Practical quantitation limit
B = Detected in the method blank
E = Quantitation of compound exceeded the calibration range
ND = Not detected at or above the MDL
J = Estimated result < PQL and ≥ MDL
P = The RPD between two GC columns exceeds 40%
Where applicable, all soil sample analysis are reported on a dry weight basis unless flagged with a "W"
N = Recovery is out of criteria
H = Out of holding time

Dissolved RCRA Metals

Client: ARCADIS U.S., Inc.
Laboratory ID: MA26019-022
Description: G4MW037
Matrix: Aqueous
Date Sampled: 01/27/2011 1210
Date Received: 01/29/2011

Run	Prep Method	Analytical Method	Dilution	Analysis Date	Analyst	Prep Date	Batch
1		7470A	1	02/01/2011 1420	BNW	02/01/2011 1020	51804
1	3005A	6010C	1	02/01/2011 2326	CDF	01/31/2011 1050	51695

Parameter	CAS Number	Analytical Method	Result	Q	PQL	MDL	Units	Run
Dissolved Arsenic	7440-38-2	6010C	0.0090	J	0.010	0.0040	mg/L	1
Dissolved Barium	7440-39-3	6010C	0.028		0.025	0.0075	mg/L	1
Dissolved Cadmium	7440-43-9	6010C	ND		0.0020	0.00060	mg/L	1
Dissolved Chromium	7440-47-3	6010C	ND		0.0050	0.0021	mg/L	1
Dissolved Lead	7439-92-1	6010C	ND		0.010	0.0019	mg/L	1
Dissolved Mercury	7439-97-6	7470A	ND		0.00010	0.000053	mg/L	1
Dissolved Selenium	7782-49-2	6010C	ND		0.010	0.0026	mg/L	1
Dissolved Silver	7440-22-4	6010C	ND		0.0050	0.00040	mg/L	1

PQL = Practical quantitation limit
B = Detected in the method blank
E = Quantitation of compound exceeded the calibration range
ND = Not detected at or above the MDL
J = Estimated result < PQL and ≥ MDL
P = The RPD between two GC columns exceeds 40%
Where applicable, all soil sample analysis are reported on a dry weight basis unless flagged with a "W"
N = Recovery is out of criteria
H = Out of holding time

RCRA Metals

Client: ARCADIS U.S., Inc.
Laboratory ID: MA26019-022
Description: G4MW037
Matrix: Aqueous
Date Sampled: 01/27/2011 1210
Date Received: 01/29/2011

Run	Prep Method	Analytical Method	Dilution	Analysis Date	Analyst	Prep Date	Batch
1		7470A	1	02/01/2011 1417	BNW	02/01/2011 1020	51804
1	3005A	6010C	1	02/01/2011 2322	CDF	01/31/2011 1050	51695

Parameter	CAS Number	Analytical Method	Result	Q	PQL	MDL	Units	Run
Arsenic	7440-38-2	6010C	0.0057	J	0.010	0.0040	mg/L	1
Barium	7440-39-3	6010C	0.030		0.025	0.0075	mg/L	1
Cadmium	7440-43-9	6010C	ND		0.0020	0.00060	mg/L	1
Chromium	7440-47-3	6010C	0.0042	J	0.0050	0.0021	mg/L	1
Lead	7439-92-1	6010C	ND		0.010	0.0019	mg/L	1
Mercury	7439-97-6	7470A	ND		0.00010	0.000053	mg/L	1
Selenium	7782-49-2	6010C	ND		0.010	0.0026	mg/L	1
Silver	7440-22-4	6010C	ND		0.0050	0.00040	mg/L	1

PQL = Practical quantitation limit
B = Detected in the method blank
E = Quantitation of compound exceeded the calibration range
ND = Not detected at or above the MDL
J = Estimated result < PQL and ≥ MDL
P = The RPD between two GC columns exceeds 40%
Where applicable, all soil sample analysis are reported on a dry weight basis unless flagged with a "W"
N = Recovery is out of criteria
H = Out of holding time

Volatile Organic Compounds by GC/MS

Client: ARCADIS U.S., Inc.
Laboratory ID: MA26019-023
Description: G4MW027
Matrix: Aqueous
Date Sampled: 01/27/2011 1310
Date Received: 01/29/2011

Run	Prep Method	Analytical Method	Dilution	Analysis Date	Analyst	Prep Date	Batch
1	5030B	8260B	1	02/01/2011 0536	DLB		52836

Parameter	CAS Number	Analytical Method	Result	Q	PQL	MDL	Units	Run
Acetone	67-64-1	8260B	ND		20	6.7	ug/L	1
Benzene	71-43-2	8260B	ND		1.0	0.13	ug/L	1
Bromodichloromethane	75-27-4	8260B	ND		1.0	0.33	ug/L	1
Bromoform	75-25-2	8260B	ND		1.0	0.66	ug/L	1
Bromomethane (Methyl bromide)	74-83-9	8260B	ND		2.0	0.80	ug/L	1
2-Butanone (MEK)	78-93-3	8260B	ND		10	2.0	ug/L	1
Carbon disulfide	75-15-0	8260B	ND		1.0	0.097	ug/L	1
Carbon tetrachloride	56-23-5	8260B	ND		1.0	0.14	ug/L	1
Chlorobenzene	108-90-7	8260B	ND		2.0	0.33	ug/L	1
Chloroethane	75-00-3	8260B	ND		2.0	0.47	ug/L	1
Chloroform	67-66-3	8260B	ND		1.0	0.33	ug/L	1
Chloromethane (Methyl chloride)	74-87-3	8260B	ND		1.0	0.35	ug/L	1
Dibromochloromethane	124-48-1	8260B	ND		1.0	0.33	ug/L	1
1,4-Dichlorobenzene	106-46-7	8260B	ND		1.0	0.33	ug/L	1
1,3-Dichlorobenzene	541-73-1	8260B	ND		1.0	0.33	ug/L	1
1,2-Dichlorobenzene	95-50-1	8260B	ND		1.0	0.33	ug/L	1
1,2-Dichloroethane	107-06-2	8260B	ND		1.0	0.15	ug/L	1
1,1-Dichloroethane	75-34-3	8260B	ND		1.0	0.13	ug/L	1
trans-1,2-Dichloroethene	156-60-5	8260B	ND		1.0	0.21	ug/L	1
cis-1,2-Dichloroethene	156-59-2	8260B	0.33	J	1.0	0.12	ug/L	1
1,1-Dichloroethene	75-35-4	8260B	ND		1.0	0.16	ug/L	1
1,2-Dichloropropane	78-87-5	8260B	ND		1.0	0.19	ug/L	1
trans-1,3-Dichloropropene	10061-02-6	8260B	ND		1.0	0.11	ug/L	1
cis-1,3-Dichloropropene	10061-01-5	8260B	ND		1.0	0.092	ug/L	1
Ethylbenzene	100-41-4	8260B	ND		1.0	0.33	ug/L	1
2-Hexanone	591-78-6	8260B	ND		10	0.27	ug/L	1
Methyl tertiary butyl ether (MTBE)	1634-04-4	8260B	ND		1.0	0.40	ug/L	1
4-Methyl-2-pentanone	108-10-1	8260B	ND		10	0.31	ug/L	1
Methylene chloride	75-09-2	8260B	ND		1.0	0.33	ug/L	1
Styrene	100-42-5	8260B	ND		1.0	0.12	ug/L	1
1,1,2,2-Tetrachloroethane	79-34-5	8260B	ND		1.0	0.16	ug/L	1
Tetrachloroethene	127-18-4	8260B	ND		1.0	0.13	ug/L	1
Toluene	108-88-3	8260B	ND		1.0	0.33	ug/L	1
1,2,4-Trichlorobenzene	120-82-1	8260B	ND		1.0	0.51	ug/L	1
1,1,2-Trichloroethane	79-00-5	8260B	ND		1.0	0.21	ug/L	1
1,1,1-Trichloroethane	71-55-6	8260B	ND		1.0	0.074	ug/L	1
Trichloroethene	79-01-6	8260B	6.4		1.0	0.18	ug/L	1
Vinyl chloride	75-01-4	8260B	ND		1.0	0.054	ug/L	1
Xylenes (total)	1330-20-7	8260B	ND		1.0	0.33	ug/L	1

PQL = Practical quantitation limit
B = Detected in the method blank
E = Quantitation of compound exceeded the calibration range
ND = Not detected at or above the MDL
J = Estimated result < PQL and ≥ MDL
P = The RPD between two GC columns exceeds 40%
Where applicable, all soil sample analysis are reported on a dry weight basis unless flagged with a "W"
N = Recovery is out of criteria
H = Out of holding time

Volatile Organic Compounds by GC/MS

Client: ARCADIS U.S., Inc.
Laboratory ID: MA26019-023
Description: G4MW027
Matrix: Aqueous
Date Sampled: 01/27/2011 1310
Date Received: 01/29/2011

Surrogate	Q	Run 1 % Recovery	Acceptance Limits
1,2-Dichloroethane-d4		74	70-130
Bromofluorobenzene		86	70-130
Toluene-d8		91	70-130

PQL = Practical quantitation limit
B = Detected in the method blank
E = Quantitation of compound exceeded the calibration range
ND = Not detected at or above the MDL
J = Estimated result < PQL and ≥ MDL
P = The RPD between two GC columns exceeds 40%
Where applicable, all soil sample analysis are reported on a dry weight basis unless flagged with a "W"
N = Recovery is out of criteria
H = Out of holding time

Semivolatile Organic Compounds by GC/MS

Client: ARCADIS U.S., Inc.
Laboratory ID: MA26019-023
Description: G4MW027
Matrix: Aqueous
Date Sampled: 01/27/2011 1310
Date Received: 01/29/2011

Run	Prep Method	Analytical Method	Dilution	Analysis Date	Analyst	Prep Date	Batch
1	3520C	8270D	1	02/04/2011 0040	WD	01/31/2011 1400	51711

Parameter	CAS Number	Analytical Method	Result	Q	PQL	MDL	Units	Run
Acenaphthene	83-32-9	8270D	ND		1.0	0.090	ug/L	1
Acenaphthylene	208-96-8	8270D	ND		1.0	0.16	ug/L	1
Anthracene	120-12-7	8270D	ND		1.0	0.13	ug/L	1
Benzo(a)anthracene	56-55-3	8270D	ND		1.0	0.15	ug/L	1
Benzo(a)pyrene	50-32-8	8270D	ND		1.0	0.16	ug/L	1
Benzo(b)fluoranthene	205-99-2	8270D	ND		1.0	0.20	ug/L	1
Benzo(g,h,i)perylene	191-24-2	8270D	ND		1.0	0.23	ug/L	1
Benzo(k)fluoranthene	207-08-9	8270D	ND		1.0	0.12	ug/L	1
4-Bromophenyl phenyl ether	101-55-3	8270D	ND		1.0	0.12	ug/L	1
Butyl benzyl phthalate	85-68-7	8270D	ND		5.0	1.7	ug/L	1
Carbazole	86-74-8	8270D	ND		1.0	0.25	ug/L	1
4-Chloro-3-methyl phenol	59-50-7	8270D	ND		1.0	0.22	ug/L	1
4-Chloroaniline	106-47-8	8270D	ND		1.0	0.13	ug/L	1
bis(2-Chloroethoxy)methane	111-91-1	8270D	ND		1.0	0.13	ug/L	1
bis(2-Chloroisopropyl)ether	108-60-1	8270D	ND		1.0	0.080	ug/L	1
2-Chloronaphthalene	91-58-7	8270D	ND		1.0	0.12	ug/L	1
2-Chlorophenol	95-57-8	8270D	ND		1.0	0.13	ug/L	1
4-Chlorophenyl phenyl ether	7005-72-3	8270D	ND		1.0	0.11	ug/L	1
Chrysene	218-01-9	8270D	ND		1.0	0.12	ug/L	1
Dibenzo(a,h)anthracene	53-70-3	8270D	ND		1.0	0.13	ug/L	1
Dibenzofuran	132-64-9	8270D	ND		1.0	0.16	ug/L	1
3,3'-Dichlorobenzidine	91-94-1	8270D	ND		5.0	0.81	ug/L	1
2,4-Dichlorophenol	120-83-2	8270D	ND		1.0	0.15	ug/L	1
Diethylphthalate	84-66-2	8270D	ND		5.0	1.7	ug/L	1
Dimethyl phthalate	131-11-3	8270D	ND		5.0	1.7	ug/L	1
2,4-Dimethylphenol	105-67-9	8270D	ND		1.0	0.31	ug/L	1
Di-n-butyl phthalate	84-74-2	8270D	ND		5.0	1.7	ug/L	1
4,6-Dinitro-2-methylphenol	534-52-1	8270D	ND		5.0	1.5	ug/L	1
2,4-Dinitrophenol	51-28-5	8270D	ND		5.0	0.25	ug/L	1
2,4-Dinitrotoluene	121-14-2	8270D	ND		2.0	0.45	ug/L	1
2,6-Dinitrotoluene	606-20-2	8270D	ND		2.0	0.40	ug/L	1
Di-n-octylphthalate	117-84-0	8270D	ND		5.0	1.7	ug/L	1
bis(2-Ethylhexyl)phthalate	117-81-7	8270D	ND		5.0	1.7	ug/L	1
Fluoranthene	206-44-0	8270D	ND		1.0	0.21	ug/L	1
Fluorene	86-73-7	8270D	ND		1.0	0.10	ug/L	1
Hexachlorobenzene	118-74-1	8270D	ND		1.0	0.21	ug/L	1
Hexachlorobutadiene	87-68-3	8270D	ND		1.0	0.090	ug/L	1
Hexachlorocyclopentadiene	77-47-4	8270D	ND		5.0	0.23	ug/L	1
Hexachloroethane	67-72-1	8270D	ND		1.0	0.11	ug/L	1
Indeno(1,2,3-c,d)pyrene	193-39-5	8270D	ND		1.0	0.23	ug/L	1
Isophorone	78-59-1	8270D	ND		1.0	0.080	ug/L	1
2-Methylnaphthalene	91-57-6	8270D	ND		1.0	0.080	ug/L	1
2-Methylphenol	95-48-7	8270D	ND		1.0	0.17	ug/L	1
3 & 4-Methylphenol	106-44-5	8270D	ND		2.0	0.57	ug/L	1

PQL = Practical quantitation limit
B = Detected in the method blank
E = Quantitation of compound exceeded the calibration range
ND = Not detected at or above the MDL
J = Estimated result < PQL and ≥ MDL
P = The RPD between two GC columns exceeds 40%
Where applicable, all soil sample analysis are reported on a dry weight basis unless flagged with a "W"
N = Recovery is out of criteria
H = Out of holding time

Semivolatile Organic Compounds by GC/MS

Client: ARCADIS U.S., Inc.
Laboratory ID: MA26019-023
Description: G4MW027
Matrix: Aqueous
Date Sampled: 01/27/2011 1310
Date Received: 01/29/2011

Run	Prep Method	Analytical Method	Dilution	Analysis Date	Analyst	Prep Date	Batch
1	3520C	8270D	1	02/04/2011 0040	WD	01/31/2011 1400	51711

Parameter	CAS Number	Analytical Method	Result	Q	PQL	MDL	Units	Run
Naphthalene	91-20-3	8270D	ND		1.0	0.070	ug/L	1
2-Nitroaniline	88-74-4	8270D	ND		2.0	0.55	ug/L	1
3-Nitroaniline	99-09-2	8270D	ND		2.0	0.77	ug/L	1
4-Nitroaniline	100-01-6	8270D	ND		2.0	0.39	ug/L	1
Nitrobenzene	98-95-3	8270D	ND		1.0	0.10	ug/L	1
2-Nitrophenol	88-75-5	8270D	ND		2.0	0.27	ug/L	1
4-Nitrophenol	100-02-7	8270D	ND		5.0	0.64	ug/L	1
N-Nitrosodi-n-propylamine	621-64-7	8270D	ND		1.0	0.080	ug/L	1
N-Nitrosodiphenylamine (Diphenylamine)	86-30-6	8270D	ND		1.0	0.38	ug/L	1
Pentachlorophenol	87-86-5	8270D	ND		5.0	0.54	ug/L	1
Phenanthrene	85-01-8	8270D	ND		1.0	0.18	ug/L	1
Phenol	108-95-2	8270D	ND		1.0	0.11	ug/L	1
Pyrene	129-00-0	8270D	ND		1.0	0.16	ug/L	1
2,4,5-Trichlorophenol	95-95-4	8270D	ND		1.0	0.18	ug/L	1
2,4,6-Trichlorophenol	88-06-2	8270D	ND		1.0	0.22	ug/L	1

Surrogate	Q	Run 1 % Recovery	Acceptance Limits
2-Fluorobiphenyl		53	37-129
2-Fluorophenol		41	24-127
Nitrobenzene-d5		45	38-127
Phenol-d5		42	28-128
Terphenyl-d14		68	10-148
2,4,6-Tribromophenol		73	41-144

PQL = Practical quantitation limit
B = Detected in the method blank
E = Quantitation of compound exceeded the calibration range
ND = Not detected at or above the MDL
J = Estimated result < PQL and ≥ MDL
P = The RPD between two GC columns exceeds 40%
Where applicable, all soil sample analysis are reported on a dry weight basis unless flagged with a "W"
N = Recovery is out of criteria
H = Out of holding time

Dissolved RCRA Metals

Client: ARCADIS U.S., Inc.
Laboratory ID: MA26019-023
Description: G4MW027
Matrix: Aqueous
Date Sampled: 01/27/2011 1310
Date Received: 01/29/2011

Run	Prep Method	Analytical Method	Dilution	Analysis Date	Analyst	Prep Date	Batch
1		7470A	1	02/01/2011 1425	BNW	02/01/2011 1020	51804
1	3005A	6010C	1	02/01/2011 2333	CDF	01/31/2011 1050	51695

Parameter	CAS Number	Analytical Method	Result	Q	PQL	MDL	Units	Run
Dissolved Arsenic	7440-38-2	6010C	ND		0.010	0.0040	mg/L	1
Dissolved Barium	7440-39-3	6010C	0.095		0.025	0.0075	mg/L	1
Dissolved Cadmium	7440-43-9	6010C	ND		0.0020	0.00060	mg/L	1
Dissolved Chromium	7440-47-3	6010C	ND		0.0050	0.0021	mg/L	1
Dissolved Lead	7439-92-1	6010C	0.0025	J	0.010	0.0019	mg/L	1
Dissolved Mercury	7439-97-6	7470A	ND		0.00010	0.000053	mg/L	1
Dissolved Selenium	7782-49-2	6010C	ND		0.010	0.0026	mg/L	1
Dissolved Silver	7440-22-4	6010C	ND		0.0050	0.00040	mg/L	1

PQL = Practical quantitation limit
B = Detected in the method blank
E = Quantitation of compound exceeded the calibration range
ND = Not detected at or above the MDL
J = Estimated result < PQL and ≥ MDL
P = The RPD between two GC columns exceeds 40%
Where applicable, all soil sample analysis are reported on a dry weight basis unless flagged with a "W"
N = Recovery is out of criteria
H = Out of holding time

RCRA Metals

Client: ARCADIS U.S., Inc.
Laboratory ID: MA26019-023
Description: G4MW027
Matrix: Aqueous
Date Sampled: 01/27/2011 1310
Date Received: 01/29/2011

Run	Prep Method	Analytical Method	Dilution	Analysis Date	Analyst	Prep Date	Batch
1		7470A	1	02/01/2011 1422	BNW	02/01/2011 1020	51804
1	3005A	6010C	1	02/01/2011 2329	CDF	01/31/2011 1050	51695

Parameter	CAS Number	Analytical Method	Result	Q	PQL	MDL	Units	Run
Arsenic	7440-38-2	6010C	ND		0.010	0.0040	mg/L	1
Barium	7440-39-3	6010C	0.092		0.025	0.0075	mg/L	1
Cadmium	7440-43-9	6010C	ND		0.0020	0.00060	mg/L	1
Chromium	7440-47-3	6010C	0.0034	J	0.0050	0.0021	mg/L	1
Lead	7439-92-1	6010C	0.0088	J	0.010	0.0019	mg/L	1
Mercury	7439-97-6	7470A	ND		0.00010	0.000053	mg/L	1
Selenium	7782-49-2	6010C	ND		0.010	0.0026	mg/L	1
Silver	7440-22-4	6010C	ND		0.0050	0.00040	mg/L	1

PQL = Practical quantitation limit
B = Detected in the method blank
E = Quantitation of compound exceeded the calibration range
ND = Not detected at or above the MDL
J = Estimated result < PQL and ≥ MDL
P = The RPD between two GC columns exceeds 40%
Where applicable, all soil sample analysis are reported on a dry weight basis unless flagged with a "W"
N = Recovery is out of criteria
H = Out of holding time

Volatile Organic Compounds by GC/MS

Client: ARCADIS U.S., Inc.
Laboratory ID: MA26019-024
Description: G4MW046
Matrix: Aqueous
Date Sampled: 01/27/2011 1610
Date Received: 01/29/2011

Run	Prep Method	Analytical Method	Dilution	Analysis Date	Analyst	Prep Date	Batch
1	5030B	8260B	1	02/01/2011 0557	DLB		52836

Parameter	CAS Number	Analytical Method	Result	Q	PQL	MDL	Units	Run
Acetone	67-64-1	8260B	ND		20	6.7	ug/L	1
Benzene	71-43-2	8260B	ND		1.0	0.13	ug/L	1
Bromodichloromethane	75-27-4	8260B	ND		1.0	0.33	ug/L	1
Bromoform	75-25-2	8260B	ND		1.0	0.66	ug/L	1
Bromomethane (Methyl bromide)	74-83-9	8260B	ND		2.0	0.80	ug/L	1
2-Butanone (MEK)	78-93-3	8260B	ND		10	2.0	ug/L	1
Carbon disulfide	75-15-0	8260B	0.38	J	1.0	0.097	ug/L	1
Carbon tetrachloride	56-23-5	8260B	ND		1.0	0.14	ug/L	1
Chlorobenzene	108-90-7	8260B	ND		2.0	0.33	ug/L	1
Chloroethane	75-00-3	8260B	ND		2.0	0.47	ug/L	1
Chloroform	67-66-3	8260B	0.55	J	1.0	0.33	ug/L	1
Chloromethane (Methyl chloride)	74-87-3	8260B	ND		1.0	0.35	ug/L	1
Dibromochloromethane	124-48-1	8260B	ND		1.0	0.33	ug/L	1
1,4-Dichlorobenzene	106-46-7	8260B	ND		1.0	0.33	ug/L	1
1,3-Dichlorobenzene	541-73-1	8260B	ND		1.0	0.33	ug/L	1
1,2-Dichlorobenzene	95-50-1	8260B	ND		1.0	0.33	ug/L	1
1,2-Dichloroethane	107-06-2	8260B	ND		1.0	0.15	ug/L	1
1,1-Dichloroethane	75-34-3	8260B	ND		1.0	0.13	ug/L	1
trans-1,2-Dichloroethene	156-60-5	8260B	ND		1.0	0.21	ug/L	1
cis-1,2-Dichloroethene	156-59-2	8260B	0.33	J	1.0	0.12	ug/L	1
1,1-Dichloroethene	75-35-4	8260B	ND		1.0	0.16	ug/L	1
1,2-Dichloropropane	78-87-5	8260B	ND		1.0	0.19	ug/L	1
trans-1,3-Dichloropropene	10061-02-6	8260B	ND		1.0	0.11	ug/L	1
cis-1,3-Dichloropropene	10061-01-5	8260B	ND		1.0	0.092	ug/L	1
Ethylbenzene	100-41-4	8260B	ND		1.0	0.33	ug/L	1
2-Hexanone	591-78-6	8260B	ND		10	0.27	ug/L	1
Methyl tertiary butyl ether (MTBE)	1634-04-4	8260B	ND		1.0	0.40	ug/L	1
4-Methyl-2-pentanone	108-10-1	8260B	ND		10	0.31	ug/L	1
Methylene chloride	75-09-2	8260B	ND		1.0	0.33	ug/L	1
Styrene	100-42-5	8260B	ND		1.0	0.12	ug/L	1
1,1,2,2-Tetrachloroethane	79-34-5	8260B	ND		1.0	0.16	ug/L	1
Tetrachloroethene	127-18-4	8260B	ND		1.0	0.13	ug/L	1
Toluene	108-88-3	8260B	ND		1.0	0.33	ug/L	1
1,2,4-Trichlorobenzene	120-82-1	8260B	ND		1.0	0.51	ug/L	1
1,1,2-Trichloroethane	79-00-5	8260B	ND		1.0	0.21	ug/L	1
1,1,1-Trichloroethane	71-55-6	8260B	ND		1.0	0.074	ug/L	1
Trichloroethene	79-01-6	8260B	2.5		1.0	0.18	ug/L	1
Vinyl chloride	75-01-4	8260B	ND		1.0	0.054	ug/L	1
Xylenes (total)	1330-20-7	8260B	ND		1.0	0.33	ug/L	1

PQL = Practical quantitation limit
B = Detected in the method blank
E = Quantitation of compound exceeded the calibration range
ND = Not detected at or above the MDL
J = Estimated result < PQL and ≥ MDL
P = The RPD between two GC columns exceeds 40%
Where applicable, all soil sample analysis are reported on a dry weight basis unless flagged with a "W"
N = Recovery is out of criteria
H = Out of holding time

Volatile Organic Compounds by GC/MS

Client: ARCADIS U.S., Inc.
Laboratory ID: MA26019-024
Description: G4MW046
Matrix: Aqueous
Date Sampled: 01/27/2011 1610
Date Received: 01/29/2011

Surrogate	Q	Run 1 % Recovery	Acceptance Limits
1,2-Dichloroethane-d4		74	70-130
Bromofluorobenzene		86	70-130
Toluene-d8		91	70-130

PQL = Practical quantitation limit
B = Detected in the method blank
E = Quantitation of compound exceeded the calibration range
ND = Not detected at or above the MDL
J = Estimated result < PQL and ≥ MDL
P = The RPD between two GC columns exceeds 40%
Where applicable, all soil sample analysis are reported on a dry weight basis unless flagged with a "W"
N = Recovery is out of criteria
H = Out of holding time

Semivolatile Organic Compounds by GC/MS

Client: ARCADIS U.S., Inc.
Laboratory ID: MA26019-024
Description: G4MW046
Matrix: Aqueous
Date Sampled: 01/27/2011 1610
Date Received: 01/29/2011

Run	Prep Method	Analytical Method	Dilution	Analysis Date	Analyst	Prep Date	Batch
1	3520C	8270D	1	02/02/2011 1434	JGH	01/31/2011 1400	51711

Parameter	CAS Number	Analytical Method	Result	Q	PQL	MDL	Units	Run
Acenaphthene	83-32-9	8270D	ND		1.0	0.092	ug/L	1
Acenaphthylene	208-96-8	8270D	ND		1.0	0.16	ug/L	1
Anthracene	120-12-7	8270D	ND		1.0	0.13	ug/L	1
Benzo(a)anthracene	56-55-3	8270D	ND		1.0	0.15	ug/L	1
Benzo(a)pyrene	50-32-8	8270D	ND		1.0	0.16	ug/L	1
Benzo(b)fluoranthene	205-99-2	8270D	ND		1.0	0.20	ug/L	1
Benzo(g,h,i)perylene	191-24-2	8270D	ND		1.0	0.23	ug/L	1
Benzo(k)fluoranthene	207-08-9	8270D	ND		1.0	0.12	ug/L	1
4-Bromophenyl phenyl ether	101-55-3	8270D	ND		1.0	0.12	ug/L	1
Butyl benzyl phthalate	85-68-7	8270D	ND		5.1	1.7	ug/L	1
Carbazole	86-74-8	8270D	ND		1.0	0.26	ug/L	1
4-Chloro-3-methyl phenol	59-50-7	8270D	ND		1.0	0.22	ug/L	1
4-Chloroaniline	106-47-8	8270D	ND		1.0	0.13	ug/L	1
bis(2-Chloroethoxy)methane	111-91-1	8270D	ND		1.0	0.13	ug/L	1
bis(2-Chloroisopropyl)ether	108-60-1	8270D	ND		1.0	0.082	ug/L	1
2-Chloronaphthalene	91-58-7	8270D	ND		1.0	0.12	ug/L	1
2-Chlorophenol	95-57-8	8270D	ND		1.0	0.13	ug/L	1
4-Chlorophenyl phenyl ether	7005-72-3	8270D	ND		1.0	0.11	ug/L	1
Chrysene	218-01-9	8270D	ND		1.0	0.12	ug/L	1
Dibenzo(a,h)anthracene	53-70-3	8270D	ND		1.0	0.13	ug/L	1
Dibenzofuran	132-64-9	8270D	ND		1.0	0.16	ug/L	1
3,3'-Dichlorobenzidine	91-94-1	8270D	ND		5.1	0.83	ug/L	1
2,4-Dichlorophenol	120-83-2	8270D	ND		1.0	0.15	ug/L	1
Diethylphthalate	84-66-2	8270D	ND		5.1	1.7	ug/L	1
Dimethyl phthalate	131-11-3	8270D	ND		5.1	1.7	ug/L	1
2,4-Dimethylphenol	105-67-9	8270D	ND		1.0	0.32	ug/L	1
Di-n-butyl phthalate	84-74-2	8270D	ND		5.1	1.7	ug/L	1
4,6-Dinitro-2-methylphenol	534-52-1	8270D	ND		5.1	1.5	ug/L	1
2,4-Dinitrophenol	51-28-5	8270D	ND		5.1	0.26	ug/L	1
2,4-Dinitrotoluene	121-14-2	8270D	ND		2.0	0.46	ug/L	1
2,6-Dinitrotoluene	606-20-2	8270D	ND		2.0	0.41	ug/L	1
Di-n-octylphthalate	117-84-0	8270D	ND		5.1	1.7	ug/L	1
bis(2-Ethylhexyl)phthalate	117-81-7	8270D	ND		5.1	1.7	ug/L	1
Fluoranthene	206-44-0	8270D	ND		1.0	0.21	ug/L	1
Fluorene	86-73-7	8270D	ND		1.0	0.10	ug/L	1
Hexachlorobenzene	118-74-1	8270D	ND		1.0	0.21	ug/L	1
Hexachlorobutadiene	87-68-3	8270D	ND		1.0	0.092	ug/L	1
Hexachlorocyclopentadiene	77-47-4	8270D	ND		5.1	0.23	ug/L	1
Hexachloroethane	67-72-1	8270D	ND		1.0	0.11	ug/L	1
Indeno(1,2,3-c,d)pyrene	193-39-5	8270D	ND		1.0	0.23	ug/L	1
Isophorone	78-59-1	8270D	ND		1.0	0.082	ug/L	1
2-Methylnaphthalene	91-57-6	8270D	ND		1.0	0.082	ug/L	1
2-Methylphenol	95-48-7	8270D	ND		1.0	0.17	ug/L	1
3 & 4-Methylphenol	106-44-5	8270D	ND		2.0	0.58	ug/L	1

PQL = Practical quantitation limit
B = Detected in the method blank
E = Quantitation of compound exceeded the calibration range
ND = Not detected at or above the MDL
J = Estimated result < PQL and ≥ MDL
P = The RPD between two GC columns exceeds 40%
Where applicable, all soil sample analysis are reported on a dry weight basis unless flagged with a "W"
N = Recovery is out of criteria
H = Out of holding time

Semivolatile Organic Compounds by GC/MS

Client: ARCADIS U.S., Inc.
Laboratory ID: MA26019-024
Description: G4MW046
Matrix: Aqueous
Date Sampled: 01/27/2011 1610
Date Received: 01/29/2011

Run	Prep Method	Analytical Method	Dilution	Analysis Date	Analyst	Prep Date	Batch
1	3520C	8270D	1	02/02/2011 1434	JGH	01/31/2011 1400	51711

Parameter	CAS Number	Analytical Method	Result	Q	PQL	MDL	Units	Run
Naphthalene	91-20-3	8270D	ND		1.0	0.071	ug/L	1
2-Nitroaniline	88-74-4	8270D	ND		2.0	0.56	ug/L	1
3-Nitroaniline	99-09-2	8270D	ND		2.0	0.79	ug/L	1
4-Nitroaniline	100-01-6	8270D	ND		2.0	0.40	ug/L	1
Nitrobenzene	98-95-3	8270D	ND		1.0	0.10	ug/L	1
2-Nitrophenol	88-75-5	8270D	ND		2.0	0.28	ug/L	1
4-Nitrophenol	100-02-7	8270D	ND		5.1	0.65	ug/L	1
N-Nitrosodi-n-propylamine	621-64-7	8270D	ND		1.0	0.082	ug/L	1
N-Nitrosodiphenylamine (Diphenylamine)	86-30-6	8270D	ND		1.0	0.39	ug/L	1
Pentachlorophenol	87-86-5	8270D	ND		5.1	0.55	ug/L	1
Phenanthrene	85-01-8	8270D	ND		1.0	0.18	ug/L	1
Phenol	108-95-2	8270D	ND		1.0	0.11	ug/L	1
Pyrene	129-00-0	8270D	ND		1.0	0.16	ug/L	1
2,4,5-Trichlorophenol	95-95-4	8270D	ND		1.0	0.18	ug/L	1
2,4,6-Trichlorophenol	88-06-2	8270D	ND		1.0	0.22	ug/L	1

Surrogate	Q	Run 1 % Recovery	Acceptance Limits
2-Fluorobiphenyl		49	37-129
2-Fluorophenol		52	24-127
Nitrobenzene-d5		47	38-127
Phenol-d5		52	28-128
Terphenyl-d14		53	10-148
2,4,6-Tribromophenol		73	41-144

PQL = Practical quantitation limit
B = Detected in the method blank
E = Quantitation of compound exceeded the calibration range
ND = Not detected at or above the MDL
J = Estimated result < PQL and ≥ MDL
P = The RPD between two GC columns exceeds 40%
Where applicable, all soil sample analysis are reported on a dry weight basis unless flagged with a "W"
N = Recovery is out of criteria
H = Out of holding time

Dissolved RCRA Metals

Client: ARCADIS U.S., Inc.
Laboratory ID: MA26019-024
Description: G4MW046
Matrix: Aqueous
Date Sampled: 01/27/2011 1610
Date Received: 01/29/2011

Run	Prep Method	Analytical Method	Dilution	Analysis Date	Analyst	Prep Date	Batch
1		7470A	1	02/01/2011 1442	BNW	02/01/2011 1020	51805
1	3005A	6010C	1	02/01/2011 2341	CDF	01/31/2011 1050	51695

Parameter	CAS Number	Analytical Method	Result	Q	PQL	MDL	Units	Run
Dissolved Arsenic	7440-38-2	6010C	ND		0.010	0.0040	mg/L	1
Dissolved Barium	7440-39-3	6010C	0.051		0.025	0.0075	mg/L	1
Dissolved Cadmium	7440-43-9	6010C	ND		0.0020	0.00060	mg/L	1
Dissolved Chromium	7440-47-3	6010C	0.0022	J	0.0050	0.0021	mg/L	1
Dissolved Lead	7439-92-1	6010C	0.0032	J	0.010	0.0019	mg/L	1
Dissolved Mercury	7439-97-6	7470A	ND		0.00010	0.000053	mg/L	1
Dissolved Selenium	7782-49-2	6010C	ND		0.010	0.0026	mg/L	1
Dissolved Silver	7440-22-4	6010C	ND		0.0050	0.00040	mg/L	1

PQL = Practical quantitation limit
B = Detected in the method blank
E = Quantitation of compound exceeded the calibration range
ND = Not detected at or above the MDL
J = Estimated result < PQL and ≥ MDL
P = The RPD between two GC columns exceeds 40%
Where applicable, all soil sample analysis are reported on a dry weight basis unless flagged with a "W"
N = Recovery is out of criteria
H = Out of holding time

RCRA Metals

Client: ARCADIS U.S., Inc.
Laboratory ID: MA26019-024
Description: G4MW046
Matrix: Aqueous
Date Sampled: 01/27/2011 1610
Date Received: 01/29/2011

Run	Prep Method	Analytical Method	Dilution	Analysis Date	Analyst	Prep Date	Batch
1		7470A	1	02/01/2011 1427	BNW	02/01/2011 1020	51804
1	3005A	6010C	1	02/01/2011 2337	CDF	01/31/2011 1050	51695

Parameter	CAS Number	Analytical Method	Result	Q	PQL	MDL	Units	Run
Arsenic	7440-38-2	6010C	ND		0.010	0.0040	mg/L	1
Barium	7440-39-3	6010C	0.053		0.025	0.0075	mg/L	1
Cadmium	7440-43-9	6010C	0.00062	J	0.0020	0.00060	mg/L	1
Chromium	7440-47-3	6010C	ND		0.0050	0.0021	mg/L	1
Lead	7439-92-1	6010C	ND		0.010	0.0019	mg/L	1
Mercury	7439-97-6	7470A	ND		0.00010	0.000053	mg/L	1
Selenium	7782-49-2	6010C	ND		0.010	0.0026	mg/L	1
Silver	7440-22-4	6010C	ND		0.0050	0.00040	mg/L	1

PQL = Practical quantitation limit
B = Detected in the method blank
E = Quantitation of compound exceeded the calibration range
ND = Not detected at or above the MDL
J = Estimated result < PQL and ≥ MDL
P = The RPD between two GC columns exceeds 40%
Where applicable, all soil sample analysis are reported on a dry weight basis unless flagged with a "W"
N = Recovery is out of criteria
H = Out of holding time

Volatile Organic Compounds by GC/MS

Client: ARCADIS U.S., Inc.
Laboratory ID: MA26019-025
Description: TRIP BLANK
Matrix: Aqueous
Date Sampled: 01/27/2011
Date Received: 01/29/2011

Run	Prep Method	Analytical Method	Dilution	Analysis Date	Analyst	Prep Date	Batch
1	5030B	8260B	1	02/01/2011 0619	DLB		52836

Parameter	CAS Number	Analytical Method	Result	Q	PQL	MDL	Units	Run
Acetone	67-64-1	8260B	ND		20	6.7	ug/L	1
Benzene	71-43-2	8260B	ND		1.0	0.13	ug/L	1
Bromodichloromethane	75-27-4	8260B	ND		1.0	0.33	ug/L	1
Bromoform	75-25-2	8260B	ND		1.0	0.66	ug/L	1
Bromomethane (Methyl bromide)	74-83-9	8260B	ND		2.0	0.80	ug/L	1
2-Butanone (MEK)	78-93-3	8260B	ND		10	2.0	ug/L	1
Carbon disulfide	75-15-0	8260B	ND		1.0	0.097	ug/L	1
Carbon tetrachloride	56-23-5	8260B	ND		1.0	0.14	ug/L	1
Chlorobenzene	108-90-7	8260B	ND		2.0	0.33	ug/L	1
Chloroethane	75-00-3	8260B	ND		2.0	0.47	ug/L	1
Chloroform	67-66-3	8260B	ND		1.0	0.33	ug/L	1
Chloromethane (Methyl chloride)	74-87-3	8260B	ND		1.0	0.35	ug/L	1
Dibromochloromethane	124-48-1	8260B	ND		1.0	0.33	ug/L	1
1,4-Dichlorobenzene	106-46-7	8260B	ND		1.0	0.33	ug/L	1
1,3-Dichlorobenzene	541-73-1	8260B	ND		1.0	0.33	ug/L	1
1,2-Dichlorobenzene	95-50-1	8260B	ND		1.0	0.33	ug/L	1
1,2-Dichloroethane	107-06-2	8260B	ND		1.0	0.15	ug/L	1
1,1-Dichloroethane	75-34-3	8260B	ND		1.0	0.13	ug/L	1
trans-1,2-Dichloroethene	156-60-5	8260B	ND		1.0	0.21	ug/L	1
cis-1,2-Dichloroethene	156-59-2	8260B	ND		1.0	0.12	ug/L	1
1,1-Dichloroethene	75-35-4	8260B	ND		1.0	0.16	ug/L	1
1,2-Dichloropropane	78-87-5	8260B	ND		1.0	0.19	ug/L	1
trans-1,3-Dichloropropene	10061-02-6	8260B	ND		1.0	0.11	ug/L	1
cis-1,3-Dichloropropene	10061-01-5	8260B	ND		1.0	0.092	ug/L	1
Ethylbenzene	100-41-4	8260B	ND		1.0	0.33	ug/L	1
2-Hexanone	591-78-6	8260B	ND		10	0.27	ug/L	1
Methyl tertiary butyl ether (MTBE)	1634-04-4	8260B	ND		1.0	0.40	ug/L	1
4-Methyl-2-pentanone	108-10-1	8260B	ND		10	0.31	ug/L	1
Methylene chloride	75-09-2	8260B	0.52	J	1.0	0.33	ug/L	1
Styrene	100-42-5	8260B	ND		1.0	0.12	ug/L	1
1,1,2,2-Tetrachloroethane	79-34-5	8260B	ND		1.0	0.16	ug/L	1
Tetrachloroethene	127-18-4	8260B	ND		1.0	0.13	ug/L	1
Toluene	108-88-3	8260B	ND		1.0	0.33	ug/L	1
1,2,4-Trichlorobenzene	120-82-1	8260B	ND		1.0	0.51	ug/L	1
1,1,2-Trichloroethane	79-00-5	8260B	ND		1.0	0.21	ug/L	1
1,1,1-Trichloroethane	71-55-6	8260B	ND		1.0	0.074	ug/L	1
Trichloroethene	79-01-6	8260B	ND		1.0	0.18	ug/L	1
Vinyl chloride	75-01-4	8260B	ND		1.0	0.054	ug/L	1
Xylenes (total)	1330-20-7	8260B	ND		1.0	0.33	ug/L	1

PQL = Practical quantitation limit
B = Detected in the method blank
E = Quantitation of compound exceeded the calibration range
ND = Not detected at or above the MDL
J = Estimated result < PQL and ≥ MDL
P = The RPD between two GC columns exceeds 40%
Where applicable, all soil sample analysis are reported on a dry weight basis unless flagged with a "W"
N = Recovery is out of criteria
H = Out of holding time

Volatile Organic Compounds by GC/MS

Client: ARCADIS U.S., Inc.
Laboratory ID: MA26019-025
Description: TRIP BLANK
Matrix: Aqueous
Date Sampled: 01/27/2011
Date Received: 01/29/2011

Surrogate	Q	Run 1 % Recovery	Acceptance Limits
1,2-Dichloroethane-d4		74	70-130
Bromofluorobenzene		87	70-130
Toluene-d8		92	70-130

PQL = Practical quantitation limit
B = Detected in the method blank
E = Quantitation of compound exceeded the calibration range
ND = Not detected at or above the MDL
J = Estimated result < PQL and ≥ MDL
P = The RPD between two GC columns exceeds 40%
Where applicable, all soil sample analysis are reported on a dry weight basis unless flagged with a "W"
N = Recovery is out of criteria
H = Out of holding time

Inorganic non-metals

Client: ARCADIS U.S., Inc.
Laboratory ID: MA26019-026
Description: G4MW040
Matrix: Aqueous
Date Sampled: 01/28/2011 0845
Date Received: 01/29/2011

Run	Prep Method	Analytical Method	Dilution	Analysis Date	Analyst	Prep Date	Batch
1		(Alkalinity) SM 2320B	1	01/31/2011 1716	HBB		51825
1		(Chloride) 300.0	1	02/04/2011 0442	HBB		52134
1		(Nitrate - N) 353.2	1	01/29/2011 1525	SAM		51679
1		(Nitrite - N) 353.2 REV 2	1	01/29/2011 1525	SAM		51813
1		(Sulfate) 300.0	5	02/04/2011 0945	HBB		52138
1		(TOC) 5310D	1	02/04/2011 0618	HBB		52108

Parameter	CAS Number	Analytical Method	Result	Q	PQL	MDL	Units	Run
Alkalinity		SM 2320B	ND		10	3.9	mg/L	1
Chloride		300.0	5.2		1.0	0.11	mg/L	1
Nitrate - N		353.2	0.34		0.020	0.0013	mg/L	1
Nitrite - N		353.2 REV 2	ND		0.020	0.0034	mg/L	1
Sulfate		300.0	140		5.0	1.4	mg/L	1
TOC		5310D	5.9		1.0	0.063	mg/L	1

PQL = Practical quantitation limit
B = Detected in the method blank
E = Quantitation of compound exceeded the calibration range
ND = Not detected at or above the MDL
J = Estimated result < PQL and ≥ MDL
P = The RPD between two GC columns exceeds 40%
Where applicable, all soil sample analysis are reported on a dry weight basis unless flagged with a "W"
N = Recovery is out of criteria
H = Out of holding time

Volatile Organic Compounds by GC/MS

Client: ARCADIS U.S., Inc.
Laboratory ID: MA26019-026
Description: G4MW040
Matrix: Aqueous
Date Sampled: 01/28/2011 0845
Date Received: 01/29/2011

Run	Prep Method	Analytical Method	Dilution	Analysis Date	Analyst	Prep Date	Batch
1	5030B	8260B	1	02/01/2011 0640	DLB		52836

Parameter	CAS Number	Analytical Method	Result	Q	PQL	MDL	Units	Run
Acetone	67-64-1	8260B	ND		20	6.7	ug/L	1
Benzene	71-43-2	8260B	ND		1.0	0.13	ug/L	1
Bromodichloromethane	75-27-4	8260B	ND		1.0	0.33	ug/L	1
Bromoform	75-25-2	8260B	ND		1.0	0.66	ug/L	1
Bromomethane (Methyl bromide)	74-83-9	8260B	ND		2.0	0.80	ug/L	1
2-Butanone (MEK)	78-93-3	8260B	ND		10	2.0	ug/L	1
Carbon disulfide	75-15-0	8260B	0.27	J	1.0	0.097	ug/L	1
Carbon tetrachloride	56-23-5	8260B	ND		1.0	0.14	ug/L	1
Chlorobenzene	108-90-7	8260B	ND		2.0	0.33	ug/L	1
Chloroethane	75-00-3	8260B	ND		2.0	0.47	ug/L	1
Chloroform	67-66-3	8260B	ND		1.0	0.33	ug/L	1
Chloromethane (Methyl chloride)	74-87-3	8260B	ND		1.0	0.35	ug/L	1
Dibromochloromethane	124-48-1	8260B	ND		1.0	0.33	ug/L	1
1,4-Dichlorobenzene	106-46-7	8260B	ND		1.0	0.33	ug/L	1
1,3-Dichlorobenzene	541-73-1	8260B	ND		1.0	0.33	ug/L	1
1,2-Dichlorobenzene	95-50-1	8260B	ND		1.0	0.33	ug/L	1
1,2-Dichloroethane	107-06-2	8260B	ND		1.0	0.15	ug/L	1
1,1-Dichloroethane	75-34-3	8260B	ND		1.0	0.13	ug/L	1
trans-1,2-Dichloroethene	156-60-5	8260B	4.7		1.0	0.21	ug/L	1
cis-1,2-Dichloroethene	156-59-2	8260B	24		1.0	0.12	ug/L	1
1,1-Dichloroethene	75-35-4	8260B	0.20	J	1.0	0.16	ug/L	1
1,2-Dichloropropane	78-87-5	8260B	ND		1.0	0.19	ug/L	1
trans-1,3-Dichloropropene	10061-02-6	8260B	ND		1.0	0.11	ug/L	1
cis-1,3-Dichloropropene	10061-01-5	8260B	ND		1.0	0.092	ug/L	1
Ethylbenzene	100-41-4	8260B	ND		1.0	0.33	ug/L	1
2-Hexanone	591-78-6	8260B	ND		10	0.27	ug/L	1
Methyl tertiary butyl ether (MTBE)	1634-04-4	8260B	ND		1.0	0.40	ug/L	1
4-Methyl-2-pentanone	108-10-1	8260B	ND		10	0.31	ug/L	1
Methylene chloride	75-09-2	8260B	ND		1.0	0.33	ug/L	1
Styrene	100-42-5	8260B	ND		1.0	0.12	ug/L	1
1,1,2,2-Tetrachloroethane	79-34-5	8260B	ND		1.0	0.16	ug/L	1
Tetrachloroethene	127-18-4	8260B	ND		1.0	0.13	ug/L	1
Toluene	108-88-3	8260B	ND		1.0	0.33	ug/L	1
1,2,4-Trichlorobenzene	120-82-1	8260B	ND		1.0	0.51	ug/L	1
1,1,2-Trichloroethane	79-00-5	8260B	ND		1.0	0.21	ug/L	1
1,1,1-Trichloroethane	71-55-6	8260B	ND		1.0	0.074	ug/L	1
Trichloroethene	79-01-6	8260B	52		1.0	0.18	ug/L	1
Vinyl chloride	75-01-4	8260B	ND		1.0	0.054	ug/L	1
Xylenes (total)	1330-20-7	8260B	ND		1.0	0.33	ug/L	1

PQL = Practical quantitation limit
B = Detected in the method blank
E = Quantitation of compound exceeded the calibration range
ND = Not detected at or above the MDL
J = Estimated result < PQL and ≥ MDL
P = The RPD between two GC columns exceeds 40%
Where applicable, all soil sample analysis are reported on a dry weight basis unless flagged with a "W"
N = Recovery is out of criteria
H = Out of holding time

Volatile Organic Compounds by GC/MS

Client: ARCADIS U.S., Inc.
Laboratory ID: MA26019-026
Description: G4MW040
Matrix: Aqueous
Date Sampled: 01/28/2011 0845
Date Received: 01/29/2011

Surrogate	Q	Run 1 % Recovery	Acceptance Limits
1,2-Dichloroethane-d4		81	70-130
Bromofluorobenzene		90	70-130
Toluene-d8		95	70-130

PQL = Practical quantitation limit
B = Detected in the method blank
E = Quantitation of compound exceeded the calibration range
ND = Not detected at or above the MDL
J = Estimated result < PQL and ≥ MDL
P = The RPD between two GC columns exceeds 40%
Where applicable, all soil sample analysis are reported on a dry weight basis unless flagged with a "W"
N = Recovery is out of criteria
H = Out of holding time

Semivolatile Organic Compounds by GC/MS

Client: ARCADIS U.S., Inc.
Laboratory ID: MA26019-026
Description: G4MW040
Matrix: Aqueous
Date Sampled: 01/28/2011 0845
Date Received: 01/29/2011

Run	Prep Method	Analytical Method	Dilution	Analysis Date	Analyst	Prep Date	Batch
1	3520C	8270D	1	02/02/2011 1549	JGH	01/31/2011 1400	51711

Parameter	CAS Number	Analytical Method	Result	Q	PQL	MDL	Units	Run
Acenaphthene	83-32-9	8270D	ND		1.0	0.090	ug/L	1
Acenaphthylene	208-96-8	8270D	ND		1.0	0.16	ug/L	1
Anthracene	120-12-7	8270D	ND		1.0	0.13	ug/L	1
Benzo(a)anthracene	56-55-3	8270D	ND		1.0	0.15	ug/L	1
Benzo(a)pyrene	50-32-8	8270D	ND		1.0	0.16	ug/L	1
Benzo(b)fluoranthene	205-99-2	8270D	ND		1.0	0.20	ug/L	1
Benzo(g,h,i)perylene	191-24-2	8270D	ND		1.0	0.23	ug/L	1
Benzo(k)fluoranthene	207-08-9	8270D	ND		1.0	0.12	ug/L	1
4-Bromophenyl phenyl ether	101-55-3	8270D	ND		1.0	0.12	ug/L	1
Butyl benzyl phthalate	85-68-7	8270D	ND		5.0	1.7	ug/L	1
Carbazole	86-74-8	8270D	ND		1.0	0.25	ug/L	1
4-Chloro-3-methyl phenol	59-50-7	8270D	ND		1.0	0.22	ug/L	1
4-Chloroaniline	106-47-8	8270D	ND		1.0	0.13	ug/L	1
bis(2-Chloroethoxy)methane	111-91-1	8270D	ND		1.0	0.13	ug/L	1
bis(2-Chloroisopropyl)ether	108-60-1	8270D	ND		1.0	0.080	ug/L	1
2-Chloronaphthalene	91-58-7	8270D	ND		1.0	0.12	ug/L	1
2-Chlorophenol	95-57-8	8270D	ND		1.0	0.13	ug/L	1
4-Chlorophenyl phenyl ether	7005-72-3	8270D	ND		1.0	0.11	ug/L	1
Chrysene	218-01-9	8270D	ND		1.0	0.12	ug/L	1
Dibenzo(a,h)anthracene	53-70-3	8270D	ND		1.0	0.13	ug/L	1
Dibenzofuran	132-64-9	8270D	ND		1.0	0.16	ug/L	1
3,3'-Dichlorobenzidine	91-94-1	8270D	ND		5.0	0.81	ug/L	1
2,4-Dichlorophenol	120-83-2	8270D	ND		1.0	0.15	ug/L	1
Diethylphthalate	84-66-2	8270D	ND		5.0	1.7	ug/L	1
Dimethyl phthalate	131-11-3	8270D	ND		5.0	1.7	ug/L	1
2,4-Dimethylphenol	105-67-9	8270D	ND		1.0	0.31	ug/L	1
Di-n-butyl phthalate	84-74-2	8270D	ND		5.0	1.7	ug/L	1
4,6-Dinitro-2-methylphenol	534-52-1	8270D	ND		5.0	1.5	ug/L	1
2,4-Dinitrophenol	51-28-5	8270D	ND		5.0	0.25	ug/L	1
2,4-Dinitrotoluene	121-14-2	8270D	ND		2.0	0.45	ug/L	1
2,6-Dinitrotoluene	606-20-2	8270D	ND		2.0	0.40	ug/L	1
Di-n-octylphthalate	117-84-0	8270D	ND		5.0	1.7	ug/L	1
bis(2-Ethylhexyl)phthalate	117-81-7	8270D	ND		5.0	1.7	ug/L	1
Fluoranthene	206-44-0	8270D	ND		1.0	0.21	ug/L	1
Fluorene	86-73-7	8270D	ND		1.0	0.10	ug/L	1
Hexachlorobenzene	118-74-1	8270D	ND		1.0	0.21	ug/L	1
Hexachlorobutadiene	87-68-3	8270D	ND		1.0	0.090	ug/L	1
Hexachlorocyclopentadiene	77-47-4	8270D	ND		5.0	0.23	ug/L	1
Hexachloroethane	67-72-1	8270D	ND		1.0	0.11	ug/L	1
Indeno(1,2,3-c,d)pyrene	193-39-5	8270D	ND		1.0	0.23	ug/L	1
Isophorone	78-59-1	8270D	ND		1.0	0.080	ug/L	1
2-Methylnaphthalene	91-57-6	8270D	ND		1.0	0.080	ug/L	1
2-Methylphenol	95-48-7	8270D	ND		1.0	0.17	ug/L	1
3 & 4-Methylphenol	106-44-5	8270D	ND		2.0	0.57	ug/L	1

PQL = Practical quantitation limit
ND = Not detected at or above the MDL
B = Detected in the method blank
J = Estimated result < PQL and ≥ MDL
E = Quantitation of compound exceeded the calibration range
P = The RPD between two GC columns exceeds 40%
Where applicable, all soil sample analysis are reported on a dry weight basis unless flagged with a "W"
N = Recovery is out of criteria
H = Out of holding time

Semivolatile Organic Compounds by GC/MS

Client: ARCADIS U.S., Inc.
Laboratory ID: MA26019-026
Description: G4MW040
Matrix: Aqueous
Date Sampled: 01/28/2011 0845
Date Received: 01/29/2011

Run	Prep Method	Analytical Method	Dilution	Analysis Date	Analyst	Prep Date	Batch
1	3520C	8270D	1	02/02/2011 1549	JGH	01/31/2011 1400	51711

Parameter	CAS Number	Analytical Method	Result	Q	PQL	MDL	Units	Run
Naphthalene	91-20-3	8270D	ND		1.0	0.070	ug/L	1
2-Nitroaniline	88-74-4	8270D	ND		2.0	0.55	ug/L	1
3-Nitroaniline	99-09-2	8270D	ND		2.0	0.77	ug/L	1
4-Nitroaniline	100-01-6	8270D	ND		2.0	0.39	ug/L	1
Nitrobenzene	98-95-3	8270D	ND		1.0	0.10	ug/L	1
2-Nitrophenol	88-75-5	8270D	ND		2.0	0.27	ug/L	1
4-Nitrophenol	100-02-7	8270D	ND		5.0	0.64	ug/L	1
N-Nitrosodi-n-propylamine	621-64-7	8270D	ND		1.0	0.080	ug/L	1
N-Nitrosodiphenylamine (Diphenylamine)	86-30-6	8270D	ND		1.0	0.38	ug/L	1
Pentachlorophenol	87-86-5	8270D	ND		5.0	0.54	ug/L	1
Phenanthrene	85-01-8	8270D	ND		1.0	0.18	ug/L	1
Phenol	108-95-2	8270D	ND		1.0	0.11	ug/L	1
Pyrene	129-00-0	8270D	ND		1.0	0.16	ug/L	1
2,4,5-Trichlorophenol	95-95-4	8270D	ND		1.0	0.18	ug/L	1
2,4,6-Trichlorophenol	88-06-2	8270D	ND		1.0	0.22	ug/L	1

Surrogate	Q	Run 1 % Recovery	Acceptance Limits
2-Fluorobiphenyl		48	37-129
2-Fluorophenol		66	24-127
Nitrobenzene-d5		59	38-127
Phenol-d5		60	28-128
Terphenyl-d14		29	10-148
2,4,6-Tribromophenol		63	41-144

PQL = Practical quantitation limit
B = Detected in the method blank
E = Quantitation of compound exceeded the calibration range
ND = Not detected at or above the MDL
J = Estimated result < PQL and ≥ MDL
P = The RPD between two GC columns exceeds 40%
Where applicable, all soil sample analysis are reported on a dry weight basis unless flagged with a "W"
N = Recovery is out of criteria
H = Out of holding time

Dissolved RCRA Metals

Client: ARCADIS U.S., Inc.
Laboratory ID: MA26019-026
Description: G4MW040
Matrix: Aqueous
Date Sampled: 01/28/2011 0845
Date Received: 01/29/2011

Run	Prep Method	Analytical Method	Dilution	Analysis Date	Analyst	Prep Date	Batch
1		7470A	1	02/01/2011 1455	BNW	02/01/2011 1020	51805
1	3005A	6010C	1	02/02/2011 2321	CDF	02/01/2011 1220	51840

Parameter	CAS Number	Analytical Method	Result	Q	PQL	MDL	Units	Run
Dissolved Arsenic	7440-38-2	6010C	0.0059	J	0.010	0.0040	mg/L	1
Dissolved Barium	7440-39-3	6010C	0.065		0.025	0.0075	mg/L	1
Dissolved Cadmium	7440-43-9	6010C	ND		0.0020	0.00060	mg/L	1
Dissolved Chromium	7440-47-3	6010C	ND		0.0050	0.0021	mg/L	1
Dissolved Lead	7439-92-1	6010C	0.014		0.010	0.0019	mg/L	1
Dissolved Mercury	7439-97-6	7470A	ND		0.00010	0.000053	mg/L	1
Dissolved Selenium	7782-49-2	6010C	ND		0.010	0.0026	mg/L	1
Dissolved Silver	7440-22-4	6010C	ND		0.0050	0.00040	mg/L	1

PQL = Practical quantitation limit
B = Detected in the method blank
E = Quantitation of compound exceeded the calibration range
ND = Not detected at or above the MDL
J = Estimated result < PQL and ≥ MDL
P = The RPD between two GC columns exceeds 40%
Where applicable, all soil sample analysis are reported on a dry weight basis unless flagged with a "W"
N = Recovery is out of criteria
H = Out of holding time

RCRA Metals

Client: ARCADIS U.S., Inc.
Laboratory ID: MA26019-026
Description: G4MW040
Matrix: Aqueous
Date Sampled: 01/28/2011 0845
Date Received: 01/29/2011

Run	Prep Method	Analytical Method	Dilution	Analysis Date	Analyst	Prep Date	Batch
1		7470A	1	02/01/2011 1445	BNW	02/01/2011 1020	51805
1	3005A	6010C	1	02/02/2011 2317	CDF	02/01/2011 1220	51840

Parameter	CAS Number	Analytical Method	Result	Q	PQL	MDL	Units	Run
Arsenic	7440-38-2	6010C	0.0057	J	0.010	0.0040	mg/L	1
Barium	7440-39-3	6010C	0.089		0.025	0.0075	mg/L	1
Cadmium	7440-43-9	6010C	ND		0.0020	0.00060	mg/L	1
Chromium	7440-47-3	6010C	0.022		0.0050	0.0021	mg/L	1
Lead	7439-92-1	6010C	0.025		0.010	0.0019	mg/L	1
Mercury	7439-97-6	7470A	ND		0.00010	0.000053	mg/L	1
Selenium	7782-49-2	6010C	0.0027	J	0.010	0.0026	mg/L	1
Silver	7440-22-4	6010C	ND		0.0050	0.00040	mg/L	1

PQL = Practical quantitation limit
B = Detected in the method blank
E = Quantitation of compound exceeded the calibration range
ND = Not detected at or above the MDL
J = Estimated result < PQL and ≥ MDL
P = The RPD between two GC columns exceeds 40%
Where applicable, all soil sample analysis are reported on a dry weight basis unless flagged with a "W"
N = Recovery is out of criteria
H = Out of holding time

Volatile Organic Compounds by GC/MS

Client: ARCADIS U.S., Inc.
Laboratory ID: MA26019-027
Description: G4MW18 (012611)
Matrix: Aqueous
Date Sampled: 01/26/2011 1625
Date Received: 01/29/2011

Run	Prep Method	Analytical Method	Dilution	Analysis Date	Analyst	Prep Date	Batch
1	5030B	8260B	1	02/01/2011 0702	DLB		52836

Parameter	CAS Number	Analytical Method	Result	Q	PQL	MDL	Units	Run
Acetone	67-64-1	8260B	ND		20	6.7	ug/L	1
Benzene	71-43-2	8260B	ND		1.0	0.13	ug/L	1
Bromodichloromethane	75-27-4	8260B	ND		1.0	0.33	ug/L	1
Bromoform	75-25-2	8260B	ND		1.0	0.66	ug/L	1
Bromomethane (Methyl bromide)	74-83-9	8260B	ND		2.0	0.80	ug/L	1
2-Butanone (MEK)	78-93-3	8260B	ND		10	2.0	ug/L	1
Carbon disulfide	75-15-0	8260B	ND		1.0	0.097	ug/L	1
Carbon tetrachloride	56-23-5	8260B	ND		1.0	0.14	ug/L	1
Chlorobenzene	108-90-7	8260B	ND		2.0	0.33	ug/L	1
Chloroethane	75-00-3	8260B	ND		2.0	0.47	ug/L	1
Chloroform	67-66-3	8260B	ND		1.0	0.33	ug/L	1
Chloromethane (Methyl chloride)	74-87-3	8260B	ND		1.0	0.35	ug/L	1
Dibromochloromethane	124-48-1	8260B	ND		1.0	0.33	ug/L	1
1,4-Dichlorobenzene	106-46-7	8260B	ND		1.0	0.33	ug/L	1
1,3-Dichlorobenzene	541-73-1	8260B	ND		1.0	0.33	ug/L	1
1,2-Dichlorobenzene	95-50-1	8260B	ND		1.0	0.33	ug/L	1
1,2-Dichloroethane	107-06-2	8260B	ND		1.0	0.15	ug/L	1
1,1-Dichloroethane	75-34-3	8260B	0.13	J	1.0	0.13	ug/L	1
trans-1,2-Dichloroethene	156-60-5	8260B	3.4		1.0	0.21	ug/L	1
cis-1,2-Dichloroethene	156-59-2	8260B	13		1.0	0.12	ug/L	1
1,1-Dichloroethene	75-35-4	8260B	0.43	J	1.0	0.16	ug/L	1
1,2-Dichloropropane	78-87-5	8260B	ND		1.0	0.19	ug/L	1
trans-1,3-Dichloropropene	10061-02-6	8260B	ND		1.0	0.11	ug/L	1
cis-1,3-Dichloropropene	10061-01-5	8260B	ND		1.0	0.092	ug/L	1
Ethylbenzene	100-41-4	8260B	ND		1.0	0.33	ug/L	1
2-Hexanone	591-78-6	8260B	ND		10	0.27	ug/L	1
Methyl tertiary butyl ether (MTBE)	1634-04-4	8260B	ND		1.0	0.40	ug/L	1
4-Methyl-2-pentanone	108-10-1	8260B	ND		10	0.31	ug/L	1
Methylene chloride	75-09-2	8260B	ND		1.0	0.33	ug/L	1
Styrene	100-42-5	8260B	ND		1.0	0.12	ug/L	1
1,1,2,2-Tetrachloroethane	79-34-5	8260B	ND		1.0	0.16	ug/L	1
Tetrachloroethene	127-18-4	8260B	ND		1.0	0.13	ug/L	1
Toluene	108-88-3	8260B	ND		1.0	0.33	ug/L	1
1,2,4-Trichlorobenzene	120-82-1	8260B	ND		1.0	0.51	ug/L	1
1,1,2-Trichloroethane	79-00-5	8260B	ND		1.0	0.21	ug/L	1
1,1,1-Trichloroethane	71-55-6	8260B	ND		1.0	0.074	ug/L	1
Trichloroethene	79-01-6	8260B	6.7		1.0	0.18	ug/L	1
Vinyl chloride	75-01-4	8260B	ND		1.0	0.054	ug/L	1
Xylenes (total)	1330-20-7	8260B	ND		1.0	0.33	ug/L	1

PQL = Practical quantitation limit
B = Detected in the method blank
E = Quantitation of compound exceeded the calibration range
ND = Not detected at or above the MDL
J = Estimated result < PQL and ≥ MDL
P = The RPD between two GC columns exceeds 40%
Where applicable, all soil sample analysis are reported on a dry weight basis unless flagged with a "W"
N = Recovery is out of criteria
H = Out of holding time

Volatile Organic Compounds by GC/MS

Client: ARCADIS U.S., Inc.
Laboratory ID: MA26019-027
Description: G4MW18 (012611)
Matrix: Aqueous
Date Sampled: 01/26/2011 1625
Date Received: 01/29/2011

Surrogate	Q	Run 1 % Recovery	Acceptance Limits
1,2-Dichloroethane-d4		76	70-130
Bromofluorobenzene		86	70-130
Toluene-d8		92	70-130

PQL = Practical quantitation limit
B = Detected in the method blank
E = Quantitation of compound exceeded the calibration range
ND = Not detected at or above the MDL
J = Estimated result < PQL and ≥ MDL
P = The RPD between two GC columns exceeds 40%
Where applicable, all soil sample analysis are reported on a dry weight basis unless flagged with a "W"
N = Recovery is out of criteria
H = Out of holding time

Semivolatile Organic Compounds by GC/MS

Client: ARCADIS U.S., Inc.
Laboratory ID: MA26019-027
Description: G4MW18 (012611)
Matrix: Aqueous
Date Sampled: 01/26/2011 1625
Date Received: 01/29/2011

Run	Prep Method	Analytical Method	Dilution	Analysis Date	Analyst	Prep Date	Batch
1	3520C	8270D	1	02/02/2011 1453	JGH	01/31/2011 1400	51711

Parameter	CAS Number	Analytical Method	Result	Q	PQL	MDL	Units	Run
Acenaphthene	83-32-9	8270D	ND		1.0	0.091	ug/L	1
Acenaphthylene	208-96-8	8270D	ND		1.0	0.16	ug/L	1
Anthracene	120-12-7	8270D	ND		1.0	0.13	ug/L	1
Benzo(a)anthracene	56-55-3	8270D	ND		1.0	0.15	ug/L	1
Benzo(a)pyrene	50-32-8	8270D	ND		1.0	0.16	ug/L	1
Benzo(b)fluoranthene	205-99-2	8270D	ND		1.0	0.20	ug/L	1
Benzo(g,h,i)perylene	191-24-2	8270D	ND		1.0	0.23	ug/L	1
Benzo(k)fluoranthene	207-08-9	8270D	ND		1.0	0.12	ug/L	1
4-Bromophenyl phenyl ether	101-55-3	8270D	ND		1.0	0.12	ug/L	1
Butyl benzyl phthalate	85-68-7	8270D	ND		5.1	1.7	ug/L	1
Carbazole	86-74-8	8270D	ND		1.0	0.25	ug/L	1
4-Chloro-3-methyl phenol	59-50-7	8270D	ND		1.0	0.22	ug/L	1
4-Chloroaniline	106-47-8	8270D	ND		1.0	0.13	ug/L	1
bis(2-Chloroethoxy)methane	111-91-1	8270D	ND		1.0	0.13	ug/L	1
bis(2-Chloroisopropyl)ether	108-60-1	8270D	ND		1.0	0.081	ug/L	1
2-Chloronaphthalene	91-58-7	8270D	ND		1.0	0.12	ug/L	1
2-Chlorophenol	95-57-8	8270D	ND		1.0	0.13	ug/L	1
4-Chlorophenyl phenyl ether	7005-72-3	8270D	ND		1.0	0.11	ug/L	1
Chrysene	218-01-9	8270D	ND		1.0	0.12	ug/L	1
Dibenzo(a,h)anthracene	53-70-3	8270D	ND		1.0	0.13	ug/L	1
Dibenzofuran	132-64-9	8270D	ND		1.0	0.16	ug/L	1
3,3'-Dichlorobenzidine	91-94-1	8270D	ND		5.1	0.82	ug/L	1
2,4-Dichlorophenol	120-83-2	8270D	ND		1.0	0.15	ug/L	1
Diethylphthalate	84-66-2	8270D	ND		5.1	1.7	ug/L	1
Dimethyl phthalate	131-11-3	8270D	ND		5.1	1.7	ug/L	1
2,4-Dimethylphenol	105-67-9	8270D	ND		1.0	0.31	ug/L	1
Di-n-butyl phthalate	84-74-2	8270D	ND		5.1	1.7	ug/L	1
4,6-Dinitro-2-methylphenol	534-52-1	8270D	ND		5.1	1.5	ug/L	1
2,4-Dinitrophenol	51-28-5	8270D	ND		5.1	0.25	ug/L	1
2,4-Dinitrotoluene	121-14-2	8270D	ND		2.0	0.45	ug/L	1
2,6-Dinitrotoluene	606-20-2	8270D	ND		2.0	0.40	ug/L	1
Di-n-octylphthalate	117-84-0	8270D	ND		5.1	1.7	ug/L	1
bis(2-Ethylhexyl)phthalate	117-81-7	8270D	ND		5.1	1.7	ug/L	1
Fluoranthene	206-44-0	8270D	ND		1.0	0.21	ug/L	1
Fluorene	86-73-7	8270D	ND		1.0	0.10	ug/L	1
Hexachlorobenzene	118-74-1	8270D	ND		1.0	0.21	ug/L	1
Hexachlorobutadiene	87-68-3	8270D	ND		1.0	0.091	ug/L	1
Hexachlorocyclopentadiene	77-47-4	8270D	ND		5.1	0.23	ug/L	1
Hexachloroethane	67-72-1	8270D	ND		1.0	0.11	ug/L	1
Indeno(1,2,3-c,d)pyrene	193-39-5	8270D	ND		1.0	0.23	ug/L	1
Isophorone	78-59-1	8270D	ND		1.0	0.081	ug/L	1
2-Methylnaphthalene	91-57-6	8270D	ND		1.0	0.081	ug/L	1
2-Methylphenol	95-48-7	8270D	ND		1.0	0.17	ug/L	1
3 & 4-Methylphenol	106-44-5	8270D	ND		2.0	0.58	ug/L	1

PQL = Practical quantitation limit
B = Detected in the method blank
E = Quantitation of compound exceeded the calibration range
ND = Not detected at or above the MDL
J = Estimated result < PQL and ≥ MDL
P = The RPD between two GC columns exceeds 40%
Where applicable, all soil sample analysis are reported on a dry weight basis unless flagged with a "W"
N = Recovery is out of criteria
H = Out of holding time

Semivolatile Organic Compounds by GC/MS

Client: ARCADIS U.S., Inc.
Laboratory ID: MA26019-027
Description: G4MW18 (012611)
Matrix: Aqueous
Date Sampled: 01/26/2011 1625
Date Received: 01/29/2011

Run	Prep Method	Analytical Method	Dilution	Analysis Date	Analyst	Prep Date	Batch
1	3520C	8270D	1	02/02/2011 1453	JGH	01/31/2011 1400	51711

Parameter	CAS Number	Analytical Method	Result	Q	PQL	MDL	Units	Run
Naphthalene	91-20-3	8270D	ND		1.0	0.071	ug/L	1
2-Nitroaniline	88-74-4	8270D	ND		2.0	0.56	ug/L	1
3-Nitroaniline	99-09-2	8270D	ND		2.0	0.78	ug/L	1
4-Nitroaniline	100-01-6	8270D	ND		2.0	0.39	ug/L	1
Nitrobenzene	98-95-3	8270D	ND		1.0	0.10	ug/L	1
2-Nitrophenol	88-75-5	8270D	ND		2.0	0.27	ug/L	1
4-Nitrophenol	100-02-7	8270D	ND		5.1	0.65	ug/L	1
N-Nitrosodi-n-propylamine	621-64-7	8270D	ND		1.0	0.081	ug/L	1
N-Nitrosodiphenylamine (Diphenylamine)	86-30-6	8270D	ND		1.0	0.38	ug/L	1
Pentachlorophenol	87-86-5	8270D	ND		5.1	0.55	ug/L	1
Phenanthrene	85-01-8	8270D	ND		1.0	0.18	ug/L	1
Phenol	108-95-2	8270D	ND		1.0	0.11	ug/L	1
Pyrene	129-00-0	8270D	ND		1.0	0.16	ug/L	1
2,4,5-Trichlorophenol	95-95-4	8270D	ND		1.0	0.18	ug/L	1
2,4,6-Trichlorophenol	88-06-2	8270D	ND		1.0	0.22	ug/L	1

Surrogate	Q	Run 1 % Recovery	Acceptance Limits
2-Fluorobiphenyl		47	37-129
2-Fluorophenol		54	24-127
Nitrobenzene-d5		50	38-127
Phenol-d5		50	28-128
Terphenyl-d14		56	10-148
2,4,6-Tribromophenol		62	41-144

PQL = Practical quantitation limit
B = Detected in the method blank
E = Quantitation of compound exceeded the calibration range
ND = Not detected at or above the MDL
J = Estimated result < PQL and ≥ MDL
P = The RPD between two GC columns exceeds 40%
Where applicable, all soil sample analysis are reported on a dry weight basis unless flagged with a "W"
N = Recovery is out of criteria
H = Out of holding time

Dissolved RCRA Metals

Client: ARCADIS U.S., Inc.
Laboratory ID: MA26019-027
Description: G4MW18 (012611)
Matrix: Aqueous
Date Sampled: 01/26/2011 1625
Date Received: 01/29/2011

Run	Prep Method	Analytical Method	Dilution	Analysis Date	Analyst	Prep Date	Batch
1		7470A	1	02/01/2011 1500	BNW	02/01/2011 1020	51805
1	3005A	6010C	1	02/02/2011 0023	CDF	01/31/2011 1050	51696

Parameter	CAS Number	Analytical Method	Result	Q	PQL	MDL	Units	Run
Dissolved Arsenic	7440-38-2	6010C	ND		0.010	0.0040	mg/L	1
Dissolved Barium	7440-39-3	6010C	0.039		0.025	0.0075	mg/L	1
Dissolved Cadmium	7440-43-9	6010C	ND		0.0020	0.00060	mg/L	1
Dissolved Chromium	7440-47-3	6010C	ND		0.0050	0.0021	mg/L	1
Dissolved Lead	7439-92-1	6010C	ND		0.010	0.0019	mg/L	1
Dissolved Mercury	7439-97-6	7470A	ND		0.00010	0.000053	mg/L	1
Dissolved Selenium	7782-49-2	6010C	ND		0.010	0.0026	mg/L	1
Dissolved Silver	7440-22-4	6010C	ND		0.0050	0.00040	mg/L	1

PQL = Practical quantitation limit
B = Detected in the method blank
E = Quantitation of compound exceeded the calibration range
ND = Not detected at or above the MDL
J = Estimated result < PQL and ≥ MDL
P = The RPD between two GC columns exceeds 40%
Where applicable, all soil sample analysis are reported on a dry weight basis unless flagged with a "W"
N = Recovery is out of criteria
H = Out of holding time

RCRA Metals

Client: ARCADIS U.S., Inc.
Laboratory ID: MA26019-027
Description: G4MW18 (012611)
Matrix: Aqueous
Date Sampled: 01/26/2011 1625
Date Received: 01/29/2011

Run	Prep Method	Analytical Method	Dilution	Analysis Date	Analyst	Prep Date	Batch
1		7470A	1	02/01/2011 1457	BNW	02/01/2011 1020	51805
1	3005A	6010C	1	02/02/2011 0004	CDF	01/31/2011 1050	51696

Parameter	CAS Number	Analytical Method	Result	Q	PQL	MDL	Units	Run
Arsenic	7440-38-2	6010C	ND		0.010	0.0040	mg/L	1
Barium	7440-39-3	6010C	0.040		0.025	0.0075	mg/L	1
Cadmium	7440-43-9	6010C	ND		0.0020	0.00060	mg/L	1
Chromium	7440-47-3	6010C	ND		0.0050	0.0021	mg/L	1
Lead	7439-92-1	6010C	0.0024	J	0.010	0.0019	mg/L	1
Mercury	7439-97-6	7470A	ND		0.00010	0.000053	mg/L	1
Selenium	7782-49-2	6010C	ND		0.010	0.0026	mg/L	1
Silver	7440-22-4	6010C	ND		0.0050	0.00040	mg/L	1

PQL = Practical quantitation limit
B = Detected in the method blank
E = Quantitation of compound exceeded the calibration range
ND = Not detected at or above the MDL
J = Estimated result < PQL and ≥ MDL
P = The RPD between two GC columns exceeds 40%
Where applicable, all soil sample analysis are reported on a dry weight basis unless flagged with a "W"
N = Recovery is out of criteria
H = Out of holding time

Volatile Organic Compounds by GC/MS

Client: ARCADIS U.S., Inc.
Laboratory ID: MA26019-028
Description: G4MW30 (012611)
Matrix: Aqueous
Date Sampled: 01/26/2011 1815
Date Received: 01/29/2011

Run	Prep Method	Analytical Method	Dilution	Analysis Date	Analyst	Prep Date	Batch
1	5030B	8260B	1	02/01/2011 0724	DLB		52836

Parameter	CAS Number	Analytical Method	Result	Q	PQL	MDL	Units	Run
Acetone	67-64-1	8260B	ND		20	6.7	ug/L	1
Benzene	71-43-2	8260B	ND		1.0	0.13	ug/L	1
Bromodichloromethane	75-27-4	8260B	ND		1.0	0.33	ug/L	1
Bromoform	75-25-2	8260B	ND		1.0	0.66	ug/L	1
Bromomethane (Methyl bromide)	74-83-9	8260B	ND		2.0	0.80	ug/L	1
2-Butanone (MEK)	78-93-3	8260B	ND		10	2.0	ug/L	1
Carbon disulfide	75-15-0	8260B	ND		1.0	0.097	ug/L	1
Carbon tetrachloride	56-23-5	8260B	ND		1.0	0.14	ug/L	1
Chlorobenzene	108-90-7	8260B	ND		2.0	0.33	ug/L	1
Chloroethane	75-00-3	8260B	ND		2.0	0.47	ug/L	1
Chloroform	67-66-3	8260B	ND		1.0	0.33	ug/L	1
Chloromethane (Methyl chloride)	74-87-3	8260B	ND		1.0	0.35	ug/L	1
Dibromochloromethane	124-48-1	8260B	ND		1.0	0.33	ug/L	1
1,4-Dichlorobenzene	106-46-7	8260B	ND		1.0	0.33	ug/L	1
1,3-Dichlorobenzene	541-73-1	8260B	ND		1.0	0.33	ug/L	1
1,2-Dichlorobenzene	95-50-1	8260B	ND		1.0	0.33	ug/L	1
1,2-Dichloroethane	107-06-2	8260B	ND		1.0	0.15	ug/L	1
1,1-Dichloroethane	75-34-3	8260B	ND		1.0	0.13	ug/L	1
trans-1,2-Dichloroethene	156-60-5	8260B	ND		1.0	0.21	ug/L	1
cis-1,2-Dichloroethene	156-59-2	8260B	0.32	J	1.0	0.12	ug/L	1
1,1-Dichloroethene	75-35-4	8260B	ND		1.0	0.16	ug/L	1
1,2-Dichloropropane	78-87-5	8260B	ND		1.0	0.19	ug/L	1
trans-1,3-Dichloropropene	10061-02-6	8260B	ND		1.0	0.11	ug/L	1
cis-1,3-Dichloropropene	10061-01-5	8260B	ND		1.0	0.092	ug/L	1
Ethylbenzene	100-41-4	8260B	ND		1.0	0.33	ug/L	1
2-Hexanone	591-78-6	8260B	ND		10	0.27	ug/L	1
Methyl tertiary butyl ether (MTBE)	1634-04-4	8260B	ND		1.0	0.40	ug/L	1
4-Methyl-2-pentanone	108-10-1	8260B	ND		10	0.31	ug/L	1
Methylene chloride	75-09-2	8260B	ND		1.0	0.33	ug/L	1
Styrene	100-42-5	8260B	ND		1.0	0.12	ug/L	1
1,1,2,2-Tetrachloroethane	79-34-5	8260B	ND		1.0	0.16	ug/L	1
Tetrachloroethene	127-18-4	8260B	ND		1.0	0.13	ug/L	1
Toluene	108-88-3	8260B	ND		1.0	0.33	ug/L	1
1,2,4-Trichlorobenzene	120-82-1	8260B	ND		1.0	0.51	ug/L	1
1,1,2-Trichloroethane	79-00-5	8260B	ND		1.0	0.21	ug/L	1
1,1,1-Trichloroethane	71-55-6	8260B	ND		1.0	0.074	ug/L	1
Trichloroethene	79-01-6	8260B	ND		1.0	0.18	ug/L	1
Vinyl chloride	75-01-4	8260B	ND		1.0	0.054	ug/L	1
Xylenes (total)	1330-20-7	8260B	ND		1.0	0.33	ug/L	1

PQL = Practical quantitation limit
ND = Not detected at or above the MDL
Where applicable, all soil sample analysis are reported on a dry weight basis unless flagged with a "W"
B = Detected in the method blank
J = Estimated result < PQL and ≥ MDL
E = Quantitation of compound exceeded the calibration range
P = The RPD between two GC columns exceeds 40%
N = Recovery is out of criteria
H = Out of holding time

Volatile Organic Compounds by GC/MS

Client: ARCADIS U.S., Inc.
Laboratory ID: MA26019-028
Description: G4MW30 (012611)
Matrix: Aqueous
Date Sampled: 01/26/2011 1815
Date Received: 01/29/2011

Surrogate	Q	Run 1 % Recovery	Acceptance Limits
1,2-Dichloroethane-d4		76	70-130
Bromofluorobenzene		86	70-130
Toluene-d8		91	70-130

PQL = Practical quantitation limit
B = Detected in the method blank
E = Quantitation of compound exceeded the calibration range
ND = Not detected at or above the MDL
J = Estimated result < PQL and ≥ MDL
P = The RPD between two GC columns exceeds 40%
Where applicable, all soil sample analysis are reported on a dry weight basis unless flagged with a "W"
N = Recovery is out of criteria
H = Out of holding time

Semivolatile Organic Compounds by GC/MS

Client: ARCADIS U.S., Inc.
Laboratory ID: MA26019-028
Description: G4MW30 (012611)
Matrix: Aqueous
Date Sampled: 01/26/2011 1815
Date Received: 01/29/2011

Run	Prep Method	Analytical Method	Dilution	Analysis Date	Analyst	Prep Date	Batch
1	3520C	8270D	1	02/02/2011 1759	JGH	01/31/2011 1400	51711

Parameter	CAS Number	Analytical Method	Result	Q	PQL	MDL	Units	Run
Acenaphthene	83-32-9	8270D	ND		1.0	0.092	ug/L	1
Acenaphthylene	208-96-8	8270D	ND		1.0	0.16	ug/L	1
Anthracene	120-12-7	8270D	ND		1.0	0.13	ug/L	1
Benzo(a)anthracene	56-55-3	8270D	ND		1.0	0.15	ug/L	1
Benzo(a)pyrene	50-32-8	8270D	ND		1.0	0.16	ug/L	1
Benzo(b)fluoranthene	205-99-2	8270D	ND		1.0	0.20	ug/L	1
Benzo(g,h,i)perylene	191-24-2	8270D	ND		1.0	0.23	ug/L	1
Benzo(k)fluoranthene	207-08-9	8270D	ND		1.0	0.12	ug/L	1
4-Bromophenyl phenyl ether	101-55-3	8270D	ND		1.0	0.12	ug/L	1
Butyl benzyl phthalate	85-68-7	8270D	ND		5.1	1.7	ug/L	1
Carbazole	86-74-8	8270D	ND		1.0	0.26	ug/L	1
4-Chloro-3-methyl phenol	59-50-7	8270D	ND		1.0	0.22	ug/L	1
4-Chloroaniline	106-47-8	8270D	ND		1.0	0.13	ug/L	1
bis(2-Chloroethoxy)methane	111-91-1	8270D	ND		1.0	0.13	ug/L	1
bis(2-Chloroisopropyl)ether	108-60-1	8270D	ND		1.0	0.082	ug/L	1
2-Chloronaphthalene	91-58-7	8270D	ND		1.0	0.12	ug/L	1
2-Chlorophenol	95-57-8	8270D	ND		1.0	0.13	ug/L	1
4-Chlorophenyl phenyl ether	7005-72-3	8270D	ND		1.0	0.11	ug/L	1
Chrysene	218-01-9	8270D	ND		1.0	0.12	ug/L	1
Dibenzo(a,h)anthracene	53-70-3	8270D	ND		1.0	0.13	ug/L	1
Dibenzofuran	132-64-9	8270D	ND		1.0	0.16	ug/L	1
3,3'-Dichlorobenzidine	91-94-1	8270D	ND		5.1	0.83	ug/L	1
2,4-Dichlorophenol	120-83-2	8270D	ND		1.0	0.15	ug/L	1
Diethylphthalate	84-66-2	8270D	ND		5.1	1.7	ug/L	1
Dimethyl phthalate	131-11-3	8270D	ND		5.1	1.7	ug/L	1
2,4-Dimethylphenol	105-67-9	8270D	ND		1.0	0.32	ug/L	1
Di-n-butyl phthalate	84-74-2	8270D	ND		5.1	1.7	ug/L	1
4,6-Dinitro-2-methylphenol	534-52-1	8270D	ND		5.1	1.5	ug/L	1
2,4-Dinitrophenol	51-28-5	8270D	ND		5.1	0.26	ug/L	1
2,4-Dinitrotoluene	121-14-2	8270D	ND		2.0	0.46	ug/L	1
2,6-Dinitrotoluene	606-20-2	8270D	ND		2.0	0.41	ug/L	1
Di-n-octylphthalate	117-84-0	8270D	ND		5.1	1.7	ug/L	1
bis(2-Ethylhexyl)phthalate	117-81-7	8270D	ND		5.1	1.7	ug/L	1
Fluoranthene	206-44-0	8270D	ND		1.0	0.21	ug/L	1
Fluorene	86-73-7	8270D	ND		1.0	0.10	ug/L	1
Hexachlorobenzene	118-74-1	8270D	ND		1.0	0.21	ug/L	1
Hexachlorobutadiene	87-68-3	8270D	ND		1.0	0.092	ug/L	1
Hexachlorocyclopentadiene	77-47-4	8270D	ND		5.1	0.23	ug/L	1
Hexachloroethane	67-72-1	8270D	ND		1.0	0.11	ug/L	1
Indeno(1,2,3-c,d)pyrene	193-39-5	8270D	ND		1.0	0.23	ug/L	1
Isophorone	78-59-1	8270D	ND		1.0	0.082	ug/L	1
2-Methylnaphthalene	91-57-6	8270D	ND		1.0	0.082	ug/L	1
2-Methylphenol	95-48-7	8270D	ND		1.0	0.17	ug/L	1
3 & 4-Methylphenol	106-44-5	8270D	ND		2.0	0.58	ug/L	1

PQL = Practical quantitation limit
B = Detected in the method blank
E = Quantitation of compound exceeded the calibration range
ND = Not detected at or above the MDL
J = Estimated result < PQL and ≥ MDL
P = The RPD between two GC columns exceeds 40%
Where applicable, all soil sample analysis are reported on a dry weight basis unless flagged with a "W"
N = Recovery is out of criteria
H = Out of holding time

Semivolatile Organic Compounds by GC/MS

Client: ARCADIS U.S., Inc.
Laboratory ID: MA26019-028
Description: G4MW30 (012611)
Matrix: Aqueous
Date Sampled: 01/26/2011 1815
Date Received: 01/29/2011

Run	Prep Method	Analytical Method	Dilution	Analysis Date	Analyst	Prep Date	Batch
1	3520C	8270D	1	02/02/2011 1759	JGH	01/31/2011 1400	51711

Parameter	CAS Number	Analytical Method	Result	Q	PQL	MDL	Units	Run
Naphthalene	91-20-3	8270D	ND		1.0	0.071	ug/L	1
2-Nitroaniline	88-74-4	8270D	ND		2.0	0.56	ug/L	1
3-Nitroaniline	99-09-2	8270D	ND		2.0	0.79	ug/L	1
4-Nitroaniline	100-01-6	8270D	ND		2.0	0.40	ug/L	1
Nitrobenzene	98-95-3	8270D	ND		1.0	0.10	ug/L	1
2-Nitrophenol	88-75-5	8270D	ND		2.0	0.28	ug/L	1
4-Nitrophenol	100-02-7	8270D	ND		5.1	0.65	ug/L	1
N-Nitrosodi-n-propylamine	621-64-7	8270D	ND		1.0	0.082	ug/L	1
N-Nitrosodiphenylamine (Diphenylamine)	86-30-6	8270D	ND		1.0	0.39	ug/L	1
Pentachlorophenol	87-86-5	8270D	ND		5.1	0.55	ug/L	1
Phenanthrene	85-01-8	8270D	ND		1.0	0.18	ug/L	1
Phenol	108-95-2	8270D	ND		1.0	0.11	ug/L	1
Pyrene	129-00-0	8270D	ND		1.0	0.16	ug/L	1
2,4,5-Trichlorophenol	95-95-4	8270D	ND		1.0	0.18	ug/L	1
2,4,6-Trichlorophenol	88-06-2	8270D	ND		1.0	0.22	ug/L	1

Surrogate	Q	Run 1 % Recovery	Acceptance Limits
2-Fluorobiphenyl		42	37-129
2-Fluorophenol		53	24-127
Nitrobenzene-d5		43	38-127
Phenol-d5		43	28-128
Terphenyl-d14		43	10-148
2,4,6-Tribromophenol		54	41-144

PQL = Practical quantitation limit
B = Detected in the method blank
E = Quantitation of compound exceeded the calibration range
ND = Not detected at or above the MDL
J = Estimated result < PQL and ≥ MDL
P = The RPD between two GC columns exceeds 40%
Where applicable, all soil sample analysis are reported on a dry weight basis unless flagged with a "W"
N = Recovery is out of criteria
H = Out of holding time

Dissolved RCRA Metals

Client: ARCADIS U.S., Inc.
Laboratory ID: MA26019-028
Description: G4MW30 (012611)
Matrix: Aqueous
Date Sampled: 01/26/2011 1815
Date Received: 01/29/2011

Run	Prep Method	Analytical Method	Dilution	Analysis Date	Analyst	Prep Date	Batch
1		7470A	1	02/01/2011 1512	BNW	02/01/2011 1020	51805
1	3005A	6010C	1	02/02/2011 0046	CDF	01/31/2011 1050	51696

Parameter	CAS Number	Analytical Method	Result	Q	PQL	MDL	Units	Run
Dissolved Arsenic	7440-38-2	6010C	ND		0.010	0.0040	mg/L	1
Dissolved Barium	7440-39-3	6010C	0.074		0.025	0.0075	mg/L	1
Dissolved Cadmium	7440-43-9	6010C	ND		0.0020	0.00060	mg/L	1
Dissolved Chromium	7440-47-3	6010C	ND		0.0050	0.0021	mg/L	1
Dissolved Lead	7439-92-1	6010C	ND		0.010	0.0019	mg/L	1
Dissolved Mercury	7439-97-6	7470A	ND		0.00010	0.000053	mg/L	1
Dissolved Selenium	7782-49-2	6010C	ND		0.010	0.0026	mg/L	1
Dissolved Silver	7440-22-4	6010C	ND		0.0050	0.00040	mg/L	1

PQL = Practical quantitation limit
B = Detected in the method blank
E = Quantitation of compound exceeded the calibration range
ND = Not detected at or above the MDL
J = Estimated result < PQL and ≥ MDL
P = The RPD between two GC columns exceeds 40%
Where applicable, all soil sample analysis are reported on a dry weight basis unless flagged with a "W"
N = Recovery is out of criteria
H = Out of holding time

RCRA Metals

Client: ARCADIS U.S., Inc.
Laboratory ID: MA26019-028
Description: G4MW30 (012611)
Matrix: Aqueous
Date Sampled: 01/26/2011 1815
Date Received: 01/29/2011

Run	Prep Method	Analytical Method	Dilution	Analysis Date	Analyst	Prep Date	Batch
1		7470A	1	02/01/2011 1502	BNW	02/01/2011 1020	51805
1	3005A	6010C	1	02/02/2011 0026	CDF	01/31/2011 1050	51696

Parameter	CAS Number	Analytical Method	Result	Q	PQL	MDL	Units	Run
Arsenic	7440-38-2	6010C	0.0067	J	0.010	0.0040	mg/L	1
Barium	7440-39-3	6010C	0.099		0.025	0.0075	mg/L	1
Cadmium	7440-43-9	6010C	ND		0.0020	0.00060	mg/L	1
Chromium	7440-47-3	6010C	0.0032	J	0.0050	0.0021	mg/L	1
Lead	7439-92-1	6010C	0.0052	J	0.010	0.0019	mg/L	1
Mercury	7439-97-6	7470A	ND		0.00010	0.000053	mg/L	1
Selenium	7782-49-2	6010C	ND		0.010	0.0026	mg/L	1
Silver	7440-22-4	6010C	ND		0.0050	0.00040	mg/L	1

PQL = Practical quantitation limit
B = Detected in the method blank
E = Quantitation of compound exceeded the calibration range
ND = Not detected at or above the MDL
J = Estimated result < PQL and ≥ MDL
P = The RPD between two GC columns exceeds 40%
Where applicable, all soil sample analysis are reported on a dry weight basis unless flagged with a "W"
N = Recovery is out of criteria
H = Out of holding time

Volatile Organic Compounds by GC/MS

Client: ARCADIS U.S., Inc.
Laboratory ID: MA26019-029
Description: G4MW39 (012611)
Matrix: Aqueous
Date Sampled: 01/26/2011 2030
Date Received: 01/29/2011

Run	Prep Method	Analytical Method	Dilution	Analysis Date	Analyst	Prep Date	Batch
1	5030B	8260B	1	02/01/2011 0745	DLB		52836

Parameter	CAS Number	Analytical Method	Result	Q	PQL	MDL	Units	Run
Acetone	67-64-1	8260B	ND		20	6.7	ug/L	1
Benzene	71-43-2	8260B	ND		1.0	0.13	ug/L	1
Bromodichloromethane	75-27-4	8260B	ND		1.0	0.33	ug/L	1
Bromoform	75-25-2	8260B	ND		1.0	0.66	ug/L	1
Bromomethane (Methyl bromide)	74-83-9	8260B	ND		2.0	0.80	ug/L	1
2-Butanone (MEK)	78-93-3	8260B	ND		10	2.0	ug/L	1
Carbon disulfide	75-15-0	8260B	0.33	J	1.0	0.097	ug/L	1
Carbon tetrachloride	56-23-5	8260B	ND		1.0	0.14	ug/L	1
Chlorobenzene	108-90-7	8260B	ND		2.0	0.33	ug/L	1
Chloroethane	75-00-3	8260B	ND		2.0	0.47	ug/L	1
Chloroform	67-66-3	8260B	ND		1.0	0.33	ug/L	1
Chloromethane (Methyl chloride)	74-87-3	8260B	ND		1.0	0.35	ug/L	1
Dibromochloromethane	124-48-1	8260B	ND		1.0	0.33	ug/L	1
1,4-Dichlorobenzene	106-46-7	8260B	ND		1.0	0.33	ug/L	1
1,3-Dichlorobenzene	541-73-1	8260B	ND		1.0	0.33	ug/L	1
1,2-Dichlorobenzene	95-50-1	8260B	ND		1.0	0.33	ug/L	1
1,2-Dichloroethane	107-06-2	8260B	ND		1.0	0.15	ug/L	1
1,1-Dichloroethane	75-34-3	8260B	ND		1.0	0.13	ug/L	1
trans-1,2-Dichloroethene	156-60-5	8260B	ND		1.0	0.21	ug/L	1
cis-1,2-Dichloroethene	156-59-2	8260B	ND		1.0	0.12	ug/L	1
1,1-Dichloroethene	75-35-4	8260B	ND		1.0	0.16	ug/L	1
1,2-Dichloropropane	78-87-5	8260B	ND		1.0	0.19	ug/L	1
trans-1,3-Dichloropropene	10061-02-6	8260B	ND		1.0	0.11	ug/L	1
cis-1,3-Dichloropropene	10061-01-5	8260B	ND		1.0	0.092	ug/L	1
Ethylbenzene	100-41-4	8260B	ND		1.0	0.33	ug/L	1
2-Hexanone	591-78-6	8260B	ND		10	0.27	ug/L	1
Methyl tertiary butyl ether (MTBE)	1634-04-4	8260B	ND		1.0	0.40	ug/L	1
4-Methyl-2-pentanone	108-10-1	8260B	ND		10	0.31	ug/L	1
Methylene chloride	75-09-2	8260B	ND		1.0	0.33	ug/L	1
Styrene	100-42-5	8260B	ND		1.0	0.12	ug/L	1
1,1,2,2-Tetrachloroethane	79-34-5	8260B	ND		1.0	0.16	ug/L	1
Tetrachloroethene	127-18-4	8260B	ND		1.0	0.13	ug/L	1
Toluene	108-88-3	8260B	ND		1.0	0.33	ug/L	1
1,2,4-Trichlorobenzene	120-82-1	8260B	ND		1.0	0.51	ug/L	1
1,1,2-Trichloroethane	79-00-5	8260B	ND		1.0	0.21	ug/L	1
1,1,1-Trichloroethane	71-55-6	8260B	ND		1.0	0.074	ug/L	1
Trichloroethene	79-01-6	8260B	ND		1.0	0.18	ug/L	1
Vinyl chloride	75-01-4	8260B	ND		1.0	0.054	ug/L	1
Xylenes (total)	1330-20-7	8260B	ND		1.0	0.33	ug/L	1

PQL = Practical quantitation limit
B = Detected in the method blank
E = Quantitation of compound exceeded the calibration range
ND = Not detected at or above the MDL
J = Estimated result < PQL and ≥ MDL
P = The RPD between two GC columns exceeds 40%
Where applicable, all soil sample analysis are reported on a dry weight basis unless flagged with a "W"
N = Recovery is out of criteria
H = Out of holding time

Volatile Organic Compounds by GC/MS

Client: ARCADIS U.S., Inc.
Laboratory ID: MA26019-029
Description: G4MW39 (012611)
Matrix: Aqueous
Date Sampled: 01/26/2011 2030
Date Received: 01/29/2011

Surrogate	Q	Run 1 % Recovery	Acceptance Limits
1,2-Dichloroethane-d4		75	70-130
Bromofluorobenzene		85	70-130
Toluene-d8		91	70-130

PQL = Practical quantitation limit
B = Detected in the method blank
E = Quantitation of compound exceeded the calibration range
ND = Not detected at or above the MDL
J = Estimated result < PQL and ≥ MDL
P = The RPD between two GC columns exceeds 40%
Where applicable, all soil sample analysis are reported on a dry weight basis unless flagged with a "W"
N = Recovery is out of criteria
H = Out of holding time

Semivolatile Organic Compounds by GC/MS

Client: ARCADIS U.S., Inc.
Laboratory ID: MA26019-029
Description: G4MW39 (012611)
Matrix: Aqueous
Date Sampled: 01/26/2011 2030
Date Received: 01/29/2011

Run	Prep Method	Analytical Method	Dilution	Analysis Date	Analyst	Prep Date	Batch
1	3520C	8270D	1	02/02/2011 1817	JGH	01/31/2011 1400	51711

Parameter	CAS Number	Analytical Method	Result	Q	PQL	MDL	Units	Run
Acenaphthene	83-32-9	8270D	ND		1.0	0.092	ug/L	1
Acenaphthylene	208-96-8	8270D	ND		1.0	0.16	ug/L	1
Anthracene	120-12-7	8270D	ND		1.0	0.13	ug/L	1
Benzo(a)anthracene	56-55-3	8270D	ND		1.0	0.15	ug/L	1
Benzo(a)pyrene	50-32-8	8270D	ND		1.0	0.16	ug/L	1
Benzo(b)fluoranthene	205-99-2	8270D	ND		1.0	0.20	ug/L	1
Benzo(g,h,i)perylene	191-24-2	8270D	ND		1.0	0.23	ug/L	1
Benzo(k)fluoranthene	207-08-9	8270D	ND		1.0	0.12	ug/L	1
4-Bromophenyl phenyl ether	101-55-3	8270D	ND		1.0	0.12	ug/L	1
Butyl benzyl phthalate	85-68-7	8270D	ND		5.1	1.7	ug/L	1
Carbazole	86-74-8	8270D	ND		1.0	0.26	ug/L	1
4-Chloro-3-methyl phenol	59-50-7	8270D	ND		1.0	0.22	ug/L	1
4-Chloroaniline	106-47-8	8270D	ND		1.0	0.13	ug/L	1
bis(2-Chloroethoxy)methane	111-91-1	8270D	ND		1.0	0.13	ug/L	1
bis(2-Chloroisopropyl)ether	108-60-1	8270D	ND		1.0	0.082	ug/L	1
2-Chloronaphthalene	91-58-7	8270D	ND		1.0	0.12	ug/L	1
2-Chlorophenol	95-57-8	8270D	ND		1.0	0.13	ug/L	1
4-Chlorophenyl phenyl ether	7005-72-3	8270D	ND		1.0	0.11	ug/L	1
Chrysene	218-01-9	8270D	ND		1.0	0.12	ug/L	1
Dibenzo(a,h)anthracene	53-70-3	8270D	ND		1.0	0.13	ug/L	1
Dibenzofuran	132-64-9	8270D	ND		1.0	0.16	ug/L	1
3,3'-Dichlorobenzidine	91-94-1	8270D	ND		5.1	0.83	ug/L	1
2,4-Dichlorophenol	120-83-2	8270D	ND		1.0	0.15	ug/L	1
Diethylphthalate	84-66-2	8270D	ND		5.1	1.7	ug/L	1
Dimethyl phthalate	131-11-3	8270D	ND		5.1	1.7	ug/L	1
2,4-Dimethylphenol	105-67-9	8270D	ND		1.0	0.32	ug/L	1
Di-n-butyl phthalate	84-74-2	8270D	ND		5.1	1.7	ug/L	1
4,6-Dinitro-2-methylphenol	534-52-1	8270D	ND		5.1	1.5	ug/L	1
2,4-Dinitrophenol	51-28-5	8270D	ND		5.1	0.26	ug/L	1
2,4-Dinitrotoluene	121-14-2	8270D	ND		2.0	0.46	ug/L	1
2,6-Dinitrotoluene	606-20-2	8270D	ND		2.0	0.41	ug/L	1
Di-n-octylphthalate	117-84-0	8270D	ND		5.1	1.7	ug/L	1
bis(2-Ethylhexyl)phthalate	117-81-7	8270D	ND		5.1	1.7	ug/L	1
Fluoranthene	206-44-0	8270D	ND		1.0	0.21	ug/L	1
Fluorene	86-73-7	8270D	ND		1.0	0.10	ug/L	1
Hexachlorobenzene	118-74-1	8270D	ND		1.0	0.21	ug/L	1
Hexachlorobutadiene	87-68-3	8270D	ND		1.0	0.092	ug/L	1
Hexachlorocyclopentadiene	77-47-4	8270D	ND		5.1	0.23	ug/L	1
Hexachloroethane	67-72-1	8270D	ND		1.0	0.11	ug/L	1
Indeno(1,2,3-c,d)pyrene	193-39-5	8270D	ND		1.0	0.23	ug/L	1
Isophorone	78-59-1	8270D	ND		1.0	0.082	ug/L	1
2-Methylnaphthalene	91-57-6	8270D	ND		1.0	0.082	ug/L	1
2-Methylphenol	95-48-7	8270D	ND		1.0	0.17	ug/L	1
3 & 4-Methylphenol	106-44-5	8270D	ND		2.0	0.58	ug/L	1

PQL = Practical quantitation limit
B = Detected in the method blank
E = Quantitation of compound exceeded the calibration range
ND = Not detected at or above the MDL
J = Estimated result < PQL and ≥ MDL
P = The RPD between two GC columns exceeds 40%
Where applicable, all soil sample analysis are reported on a dry weight basis unless flagged with a "W"
N = Recovery is out of criteria
H = Out of holding time

Semivolatile Organic Compounds by GC/MS

Client: ARCADIS U.S., Inc.
Laboratory ID: MA26019-029
Description: G4MW39 (012611)
Matrix: Aqueous
Date Sampled: 01/26/2011 2030
Date Received: 01/29/2011

Run	Prep Method	Analytical Method	Dilution	Analysis Date	Analyst	Prep Date	Batch
1	3520C	8270D	1	02/02/2011 1817	JGH	01/31/2011 1400	51711

Parameter	CAS Number	Analytical Method	Result	Q	PQL	MDL	Units	Run
Naphthalene	91-20-3	8270D	ND		1.0	0.071	ug/L	1
2-Nitroaniline	88-74-4	8270D	ND		2.0	0.56	ug/L	1
3-Nitroaniline	99-09-2	8270D	ND		2.0	0.79	ug/L	1
4-Nitroaniline	100-01-6	8270D	ND		2.0	0.40	ug/L	1
Nitrobenzene	98-95-3	8270D	ND		1.0	0.10	ug/L	1
2-Nitrophenol	88-75-5	8270D	ND		2.0	0.28	ug/L	1
4-Nitrophenol	100-02-7	8270D	ND		5.1	0.65	ug/L	1
N-Nitrosodi-n-propylamine	621-64-7	8270D	ND		1.0	0.082	ug/L	1
N-Nitrosodiphenylamine (Diphenylamine)	86-30-6	8270D	ND		1.0	0.39	ug/L	1
Pentachlorophenol	87-86-5	8270D	ND		5.1	0.55	ug/L	1
Phenanthrene	85-01-8	8270D	ND		1.0	0.18	ug/L	1
Phenol	108-95-2	8270D	ND		1.0	0.11	ug/L	1
Pyrene	129-00-0	8270D	ND		1.0	0.16	ug/L	1
2,4,5-Trichlorophenol	95-95-4	8270D	ND		1.0	0.18	ug/L	1
2,4,6-Trichlorophenol	88-06-2	8270D	ND		1.0	0.22	ug/L	1

Surrogate	Q	Run 1 % Recovery	Acceptance Limits
2-Fluorobiphenyl		42	37-129
2-Fluorophenol		58	24-127
Nitrobenzene-d5		51	38-127
Phenol-d5		52	28-128
Terphenyl-d14		18	10-148
2,4,6-Tribromophenol		61	41-144

PQL = Practical quantitation limit
B = Detected in the method blank
E = Quantitation of compound exceeded the calibration range
ND = Not detected at or above the MDL
J = Estimated result < PQL and ≥ MDL
P = The RPD between two GC columns exceeds 40%
Where applicable, all soil sample analysis are reported on a dry weight basis unless flagged with a "W"
N = Recovery is out of criteria
H = Out of holding time

Dissolved RCRA Metals

Client: ARCADIS U.S., Inc.
Laboratory ID: MA26019-029
Description: G4MW39 (012611)
Matrix: Aqueous
Date Sampled: 01/26/2011 2030
Date Received: 01/29/2011

Run	Prep Method	Analytical Method	Dilution	Analysis Date	Analyst	Prep Date	Batch
1		7470A	1	02/01/2011 1517	BNW	02/01/2011 1020	51805
1	3005A	6010C	1	02/02/2011 0053	CDF	01/31/2011 1050	51696

Parameter	CAS Number	Analytical Method	Result	Q	PQL	MDL	Units	Run
Dissolved Arsenic	7440-38-2	6010C	0.0080	J	0.010	0.0040	mg/L	1
Dissolved Barium	7440-39-3	6010C	0.058		0.025	0.0075	mg/L	1
Dissolved Cadmium	7440-43-9	6010C	ND		0.0020	0.00060	mg/L	1
Dissolved Chromium	7440-47-3	6010C	ND		0.0050	0.0021	mg/L	1
Dissolved Lead	7439-92-1	6010C	ND		0.010	0.0019	mg/L	1
Dissolved Mercury	7439-97-6	7470A	ND		0.00010	0.000053	mg/L	1
Dissolved Selenium	7782-49-2	6010C	ND		0.010	0.0026	mg/L	1
Dissolved Silver	7440-22-4	6010C	ND		0.0050	0.00040	mg/L	1

PQL = Practical quantitation limit
B = Detected in the method blank
E = Quantitation of compound exceeded the calibration range
ND = Not detected at or above the MDL
J = Estimated result < PQL and ≥ MDL
P = The RPD between two GC columns exceeds 40%
Where applicable, all soil sample analysis are reported on a dry weight basis unless flagged with a "W"
N = Recovery is out of criteria
H = Out of holding time

RCRA Metals

Client: ARCADIS U.S., Inc.
Laboratory ID: MA26019-029
Description: G4MW39 (012611)
Matrix: Aqueous
Date Sampled: 01/26/2011 2030
Date Received: 01/29/2011

Run	Prep Method	Analytical Method	Dilution	Analysis Date	Analyst	Prep Date	Batch
1		7470A	1	02/01/2011 1514	BNW	02/01/2011 1020	51805
1	3005A	6010C	1	02/02/2011 0049	CDF	01/31/2011 1050	51696

Parameter	CAS Number	Analytical Method	Result	Q	PQL	MDL	Units	Run
Arsenic	7440-38-2	6010C	0.021		0.010	0.0040	mg/L	1
Barium	7440-39-3	6010C	0.20		0.025	0.0075	mg/L	1
Cadmium	7440-43-9	6010C	ND		0.0020	0.00060	mg/L	1
Chromium	7440-47-3	6010C	0.15		0.0050	0.0021	mg/L	1
Lead	7439-92-1	6010C	0.12		0.010	0.0019	mg/L	1
Mercury	7439-97-6	7470A	0.000084	J	0.00010	0.000053	mg/L	1
Selenium	7782-49-2	6010C	0.0032	J	0.010	0.0026	mg/L	1
Silver	7440-22-4	6010C	ND		0.0050	0.00040	mg/L	1

PQL = Practical quantitation limit
B = Detected in the method blank
E = Quantitation of compound exceeded the calibration range
ND = Not detected at or above the MDL
J = Estimated result < PQL and ≥ MDL
P = The RPD between two GC columns exceeds 40%
Where applicable, all soil sample analysis are reported on a dry weight basis unless flagged with a "W"
N = Recovery is out of criteria
H = Out of holding time

Volatile Organic Compounds by GC/MS

Client: ARCADIS U.S., Inc.
Laboratory ID: MA26019-030
Description: G4MW20 (012711)
Matrix: Aqueous
Date Sampled: 01/27/2011 0750
Date Received: 01/29/2011

Run	Prep Method	Analytical Method	Dilution	Analysis Date	Analyst	Prep Date	Batch
1	5030B	8260B	1	02/01/2011 0807	DLB		52836

Parameter	CAS Number	Analytical Method	Result	Q	PQL	MDL	Units	Run
Acetone	67-64-1	8260B	ND		20	6.7	ug/L	1
Benzene	71-43-2	8260B	0.20	J	1.0	0.13	ug/L	1
Bromodichloromethane	75-27-4	8260B	ND		1.0	0.33	ug/L	1
Bromoform	75-25-2	8260B	ND		1.0	0.66	ug/L	1
Bromomethane (Methyl bromide)	74-83-9	8260B	ND		2.0	0.80	ug/L	1
2-Butanone (MEK)	78-93-3	8260B	ND		10	2.0	ug/L	1
Carbon disulfide	75-15-0	8260B	ND		1.0	0.097	ug/L	1
Carbon tetrachloride	56-23-5	8260B	ND		1.0	0.14	ug/L	1
Chlorobenzene	108-90-7	8260B	ND		2.0	0.33	ug/L	1
Chloroethane	75-00-3	8260B	ND		2.0	0.47	ug/L	1
Chloroform	67-66-3	8260B	ND		1.0	0.33	ug/L	1
Chloromethane (Methyl chloride)	74-87-3	8260B	ND		1.0	0.35	ug/L	1
Dibromochloromethane	124-48-1	8260B	ND		1.0	0.33	ug/L	1
1,4-Dichlorobenzene	106-46-7	8260B	ND		1.0	0.33	ug/L	1
1,3-Dichlorobenzene	541-73-1	8260B	ND		1.0	0.33	ug/L	1
1,2-Dichlorobenzene	95-50-1	8260B	ND		1.0	0.33	ug/L	1
1,2-Dichloroethane	107-06-2	8260B	ND		1.0	0.15	ug/L	1
1,1-Dichloroethane	75-34-3	8260B	ND		1.0	0.13	ug/L	1
trans-1,2-Dichloroethene	156-60-5	8260B	0.51	J	1.0	0.21	ug/L	1
cis-1,2-Dichloroethene	156-59-2	8260B	2.8		1.0	0.12	ug/L	1
1,1-Dichloroethene	75-35-4	8260B	ND		1.0	0.16	ug/L	1
1,2-Dichloropropane	78-87-5	8260B	ND		1.0	0.19	ug/L	1
trans-1,3-Dichloropropene	10061-02-6	8260B	ND		1.0	0.11	ug/L	1
cis-1,3-Dichloropropene	10061-01-5	8260B	ND		1.0	0.092	ug/L	1
Ethylbenzene	100-41-4	8260B	ND		1.0	0.33	ug/L	1
2-Hexanone	591-78-6	8260B	ND		10	0.27	ug/L	1
Methyl tertiary butyl ether (MTBE)	1634-04-4	8260B	ND		1.0	0.40	ug/L	1
4-Methyl-2-pentanone	108-10-1	8260B	ND		10	0.31	ug/L	1
Methylene chloride	75-09-2	8260B	ND		1.0	0.33	ug/L	1
Styrene	100-42-5	8260B	ND		1.0	0.12	ug/L	1
1,1,2,2-Tetrachloroethane	79-34-5	8260B	ND		1.0	0.16	ug/L	1
Tetrachloroethene	127-18-4	8260B	ND		1.0	0.13	ug/L	1
Toluene	108-88-3	8260B	ND		1.0	0.33	ug/L	1
1,2,4-Trichlorobenzene	120-82-1	8260B	ND		1.0	0.51	ug/L	1
1,1,2-Trichloroethane	79-00-5	8260B	ND		1.0	0.21	ug/L	1
1,1,1-Trichloroethane	71-55-6	8260B	ND		1.0	0.074	ug/L	1
Trichloroethene	79-01-6	8260B	0.22	J	1.0	0.18	ug/L	1
Vinyl chloride	75-01-4	8260B	ND		1.0	0.054	ug/L	1
Xylenes (total)	1330-20-7	8260B	ND		1.0	0.33	ug/L	1

PQL = Practical quantitation limit
B = Detected in the method blank
E = Quantitation of compound exceeded the calibration range
ND = Not detected at or above the MDL
J = Estimated result < PQL and ≥ MDL
P = The RPD between two GC columns exceeds 40%
Where applicable, all soil sample analysis are reported on a dry weight basis unless flagged with a "W"
N = Recovery is out of criteria
H = Out of holding time

Volatile Organic Compounds by GC/MS

Client: ARCADIS U.S., Inc.
Laboratory ID: MA26019-030
Description: G4MW20 (012711)
Matrix: Aqueous
Date Sampled: 01/27/2011 0750
Date Received: 01/29/2011

Surrogate	Q	Run 1 % Recovery	Acceptance Limits
1,2-Dichloroethane-d4		75	70-130
Bromofluorobenzene		87	70-130
Toluene-d8		92	70-130

PQL = Practical quantitation limit
B = Detected in the method blank
E = Quantitation of compound exceeded the calibration range
ND = Not detected at or above the MDL
J = Estimated result < PQL and ≥ MDL
P = The RPD between two GC columns exceeds 40%
Where applicable, all soil sample analysis are reported on a dry weight basis unless flagged with a "W"
N = Recovery is out of criteria
H = Out of holding time

Semivolatile Organic Compounds by GC/MS

Client: ARCADIS U.S., Inc.
Laboratory ID: MA26019-030
Description: G4MW20 (012711)
Matrix: Aqueous
Date Sampled: 01/27/2011 0750
Date Received: 01/29/2011

Run	Prep Method	Analytical Method	Dilution	Analysis Date	Analyst	Prep Date	Batch
1	3520C	8270D	1	02/02/2011 1416	JGH	01/31/2011 1400	51711

Parameter	CAS Number	Analytical Method	Result	Q	PQL	MDL	Units	Run
Acenaphthene	83-32-9	8270D	ND		1.0	0.092	ug/L	1
Acenaphthylene	208-96-8	8270D	ND		1.0	0.16	ug/L	1
Anthracene	120-12-7	8270D	ND		1.0	0.13	ug/L	1
Benzo(a)anthracene	56-55-3	8270D	ND		1.0	0.15	ug/L	1
Benzo(a)pyrene	50-32-8	8270D	ND		1.0	0.16	ug/L	1
Benzo(b)fluoranthene	205-99-2	8270D	ND		1.0	0.20	ug/L	1
Benzo(g,h,i)perylene	191-24-2	8270D	ND		1.0	0.23	ug/L	1
Benzo(k)fluoranthene	207-08-9	8270D	ND		1.0	0.12	ug/L	1
4-Bromophenyl phenyl ether	101-55-3	8270D	ND		1.0	0.12	ug/L	1
Butyl benzyl phthalate	85-68-7	8270D	ND		5.1	1.7	ug/L	1
Carbazole	86-74-8	8270D	ND		1.0	0.26	ug/L	1
4-Chloro-3-methyl phenol	59-50-7	8270D	ND		1.0	0.22	ug/L	1
4-Chloroaniline	106-47-8	8270D	ND		1.0	0.13	ug/L	1
bis(2-Chloroethoxy)methane	111-91-1	8270D	ND		1.0	0.13	ug/L	1
bis(2-Chloroisopropyl)ether	108-60-1	8270D	ND		1.0	0.082	ug/L	1
2-Chloronaphthalene	91-58-7	8270D	ND		1.0	0.12	ug/L	1
2-Chlorophenol	95-57-8	8270D	ND		1.0	0.13	ug/L	1
4-Chlorophenyl phenyl ether	7005-72-3	8270D	ND		1.0	0.11	ug/L	1
Chrysene	218-01-9	8270D	ND		1.0	0.12	ug/L	1
Dibenzo(a,h)anthracene	53-70-3	8270D	ND		1.0	0.13	ug/L	1
Dibenzofuran	132-64-9	8270D	ND		1.0	0.16	ug/L	1
3,3'-Dichlorobenzidine	91-94-1	8270D	ND		5.1	0.83	ug/L	1
2,4-Dichlorophenol	120-83-2	8270D	ND		1.0	0.15	ug/L	1
Diethylphthalate	84-66-2	8270D	ND		5.1	1.7	ug/L	1
Dimethyl phthalate	131-11-3	8270D	ND		5.1	1.7	ug/L	1
2,4-Dimethylphenol	105-67-9	8270D	ND		1.0	0.32	ug/L	1
Di-n-butyl phthalate	84-74-2	8270D	ND		5.1	1.7	ug/L	1
4,6-Dinitro-2-methylphenol	534-52-1	8270D	ND		5.1	1.5	ug/L	1
2,4-Dinitrophenol	51-28-5	8270D	ND		5.1	0.26	ug/L	1
2,4-Dinitrotoluene	121-14-2	8270D	ND		2.0	0.46	ug/L	1
2,6-Dinitrotoluene	606-20-2	8270D	ND		2.0	0.41	ug/L	1
Di-n-octylphthalate	117-84-0	8270D	ND		5.1	1.7	ug/L	1
bis(2-Ethylhexyl)phthalate	117-81-7	8270D	ND		5.1	1.7	ug/L	1
Fluoranthene	206-44-0	8270D	ND		1.0	0.21	ug/L	1
Fluorene	86-73-7	8270D	ND		1.0	0.10	ug/L	1
Hexachlorobenzene	118-74-1	8270D	ND		1.0	0.21	ug/L	1
Hexachlorobutadiene	87-68-3	8270D	ND		1.0	0.092	ug/L	1
Hexachlorocyclopentadiene	77-47-4	8270D	ND		5.1	0.23	ug/L	1
Hexachloroethane	67-72-1	8270D	ND		1.0	0.11	ug/L	1
Indeno(1,2,3-c,d)pyrene	193-39-5	8270D	ND		1.0	0.23	ug/L	1
Isophorone	78-59-1	8270D	ND		1.0	0.082	ug/L	1
2-Methylnaphthalene	91-57-6	8270D	ND		1.0	0.082	ug/L	1
2-Methylphenol	95-48-7	8270D	ND		1.0	0.17	ug/L	1
3 & 4-Methylphenol	106-44-5	8270D	ND		2.0	0.58	ug/L	1

PQL = Practical quantitation limit
B = Detected in the method blank
E = Quantitation of compound exceeded the calibration range
ND = Not detected at or above the MDL
J = Estimated result < PQL and ≥ MDL
P = The RPD between two GC columns exceeds 40%
Where applicable, all soil sample analysis are reported on a dry weight basis unless flagged with a "W"
N = Recovery is out of criteria
H = Out of holding time

Semivolatile Organic Compounds by GC/MS

Client: ARCADIS U.S., Inc.
Laboratory ID: MA26019-030
Description: G4MW20 (012711)
Matrix: Aqueous
Date Sampled: 01/27/2011 0750
Date Received: 01/29/2011

Run	Prep Method	Analytical Method	Dilution	Analysis Date	Analyst	Prep Date	Batch
1	3520C	8270D	1	02/02/2011 1416	JGH	01/31/2011 1400	51711

Parameter	CAS Number	Analytical Method	Result	Q	PQL	MDL	Units	Run
Naphthalene	91-20-3	8270D	ND		1.0	0.071	ug/L	1
2-Nitroaniline	88-74-4	8270D	ND		2.0	0.56	ug/L	1
3-Nitroaniline	99-09-2	8270D	ND		2.0	0.79	ug/L	1
4-Nitroaniline	100-01-6	8270D	ND		2.0	0.40	ug/L	1
Nitrobenzene	98-95-3	8270D	ND		1.0	0.10	ug/L	1
2-Nitrophenol	88-75-5	8270D	ND		2.0	0.28	ug/L	1
4-Nitrophenol	100-02-7	8270D	ND		5.1	0.65	ug/L	1
N-Nitrosodi-n-propylamine	621-64-7	8270D	ND		1.0	0.082	ug/L	1
N-Nitrosodiphenylamine (Diphenylamine)	86-30-6	8270D	ND		1.0	0.39	ug/L	1
Pentachlorophenol	87-86-5	8270D	ND		5.1	0.55	ug/L	1
Phenanthrene	85-01-8	8270D	ND		1.0	0.18	ug/L	1
Phenol	108-95-2	8270D	ND		1.0	0.11	ug/L	1
Pyrene	129-00-0	8270D	ND		1.0	0.16	ug/L	1
2,4,5-Trichlorophenol	95-95-4	8270D	ND		1.0	0.18	ug/L	1
2,4,6-Trichlorophenol	88-06-2	8270D	ND		1.0	0.22	ug/L	1

Surrogate	Q	Run 1 % Recovery	Acceptance Limits
2-Fluorobiphenyl		65	37-129
2-Fluorophenol		60	24-127
Nitrobenzene-d5		61	38-127
Phenol-d5		63	28-128
Terphenyl-d14		51	10-148
2,4,6-Tribromophenol		79	41-144

PQL = Practical quantitation limit
B = Detected in the method blank
E = Quantitation of compound exceeded the calibration range
ND = Not detected at or above the MDL
J = Estimated result < PQL and ≥ MDL
P = The RPD between two GC columns exceeds 40%
Where applicable, all soil sample analysis are reported on a dry weight basis unless flagged with a "W"
N = Recovery is out of criteria
H = Out of holding time

Dissolved RCRA Metals

Client: ARCADIS U.S., Inc.
Laboratory ID: MA26019-030
Description: G4MW20 (012711)
Matrix: Aqueous
Date Sampled: 01/27/2011 0750
Date Received: 01/29/2011

Run	Prep Method	Analytical Method	Dilution	Analysis Date	Analyst	Prep Date	Batch
1		7470A	1	02/01/2011 1522	BNW	02/01/2011 1020	51805
1	3005A	6010C	1	02/02/2011 0100	CDF	01/31/2011 1050	51696

Parameter	CAS Number	Analytical Method	Result	Q	PQL	MDL	Units	Run
Dissolved Arsenic	7440-38-2	6010C	0.0099	J	0.010	0.0040	mg/L	1
Dissolved Barium	7440-39-3	6010C	0.041		0.025	0.0075	mg/L	1
Dissolved Cadmium	7440-43-9	6010C	ND		0.0020	0.00060	mg/L	1
Dissolved Chromium	7440-47-3	6010C	ND		0.0050	0.0021	mg/L	1
Dissolved Lead	7439-92-1	6010C	ND		0.010	0.0019	mg/L	1
Dissolved Mercury	7439-97-6	7470A	ND		0.00010	0.000053	mg/L	1
Dissolved Selenium	7782-49-2	6010C	ND		0.010	0.0026	mg/L	1
Dissolved Silver	7440-22-4	6010C	ND		0.0050	0.00040	mg/L	1

PQL = Practical quantitation limit
B = Detected in the method blank
E = Quantitation of compound exceeded the calibration range
ND = Not detected at or above the MDL
J = Estimated result < PQL and ≥ MDL
P = The RPD between two GC columns exceeds 40%
Where applicable, all soil sample analysis are reported on a dry weight basis unless flagged with a "W"
N = Recovery is out of criteria
H = Out of holding time

RCRA Metals

Client: ARCADIS U.S., Inc.
Laboratory ID: MA26019-030
Description: G4MW20 (012711)
Matrix: Aqueous
Date Sampled: 01/27/2011 0750
Date Received: 01/29/2011

Run	Prep Method	Analytical Method	Dilution	Analysis Date	Analyst	Prep Date	Batch
1		7470A	1	02/01/2011 1519	BNW	02/01/2011 1020	51805
1	3005A	6010C	1	02/02/2011 0057	CDF	01/31/2011 1050	51696

Parameter	CAS Number	Analytical Method	Result	Q	PQL	MDL	Units	Run
Arsenic	7440-38-2	6010C	ND		0.010	0.0040	mg/L	1
Barium	7440-39-3	6010C	0.043		0.025	0.0075	mg/L	1
Cadmium	7440-43-9	6010C	ND		0.0020	0.00060	mg/L	1
Chromium	7440-47-3	6010C	0.0040	J	0.0050	0.0021	mg/L	1
Lead	7439-92-1	6010C	ND		0.010	0.0019	mg/L	1
Mercury	7439-97-6	7470A	ND		0.00010	0.000053	mg/L	1
Selenium	7782-49-2	6010C	ND		0.010	0.0026	mg/L	1
Silver	7440-22-4	6010C	ND		0.0050	0.00040	mg/L	1

PQL = Practical quantitation limit
B = Detected in the method blank
E = Quantitation of compound exceeded the calibration range
ND = Not detected at or above the MDL
J = Estimated result < PQL and ≥ MDL
P = The RPD between two GC columns exceeds 40%
Where applicable, all soil sample analysis are reported on a dry weight basis unless flagged with a "W"
N = Recovery is out of criteria
H = Out of holding time

Volatile Organic Compounds by GC/MS

Client: ARCADIS U.S., Inc.
Laboratory ID: MA26019-031
Description: G4MW33 (012711)
Matrix: Aqueous
Date Sampled: 01/27/2011 0830
Date Received: 01/29/2011

Run	Prep Method	Analytical Method	Dilution	Analysis Date	Analyst	Prep Date	Batch
1	5030B	8260B	1	02/01/2011 0828	DLB		52836

Parameter	CAS Number	Analytical Method	Result	Q	PQL	MDL	Units	Run
Acetone	67-64-1	8260B	ND		20	6.7	ug/L	1
Benzene	71-43-2	8260B	0.22	J	1.0	0.13	ug/L	1
Bromodichloromethane	75-27-4	8260B	ND		1.0	0.33	ug/L	1
Bromoform	75-25-2	8260B	ND		1.0	0.66	ug/L	1
Bromomethane (Methyl bromide)	74-83-9	8260B	ND		2.0	0.80	ug/L	1
2-Butanone (MEK)	78-93-3	8260B	ND		10	2.0	ug/L	1
Carbon disulfide	75-15-0	8260B	ND		1.0	0.097	ug/L	1
Carbon tetrachloride	56-23-5	8260B	ND		1.0	0.14	ug/L	1
Chlorobenzene	108-90-7	8260B	ND		2.0	0.33	ug/L	1
Chloroethane	75-00-3	8260B	ND		2.0	0.47	ug/L	1
Chloroform	67-66-3	8260B	ND		1.0	0.33	ug/L	1
Chloromethane (Methyl chloride)	74-87-3	8260B	ND		1.0	0.35	ug/L	1
Dibromochloromethane	124-48-1	8260B	ND		1.0	0.33	ug/L	1
1,4-Dichlorobenzene	106-46-7	8260B	ND		1.0	0.33	ug/L	1
1,3-Dichlorobenzene	541-73-1	8260B	ND		1.0	0.33	ug/L	1
1,2-Dichlorobenzene	95-50-1	8260B	ND		1.0	0.33	ug/L	1
1,2-Dichloroethane	107-06-2	8260B	ND		1.0	0.15	ug/L	1
1,1-Dichloroethane	75-34-3	8260B	ND		1.0	0.13	ug/L	1
trans-1,2-Dichloroethene	156-60-5	8260B	0.66	J	1.0	0.21	ug/L	1
cis-1,2-Dichloroethene	156-59-2	8260B	4.9		1.0	0.12	ug/L	1
1,1-Dichloroethene	75-35-4	8260B	0.34	J	1.0	0.16	ug/L	1
1,2-Dichloropropane	78-87-5	8260B	ND		1.0	0.19	ug/L	1
trans-1,3-Dichloropropene	10061-02-6	8260B	ND		1.0	0.11	ug/L	1
cis-1,3-Dichloropropene	10061-01-5	8260B	ND		1.0	0.092	ug/L	1
Ethylbenzene	100-41-4	8260B	ND		1.0	0.33	ug/L	1
2-Hexanone	591-78-6	8260B	ND		10	0.27	ug/L	1
Methyl tertiary butyl ether (MTBE)	1634-04-4	8260B	ND		1.0	0.40	ug/L	1
4-Methyl-2-pentanone	108-10-1	8260B	ND		10	0.31	ug/L	1
Methylene chloride	75-09-2	8260B	ND		1.0	0.33	ug/L	1
Styrene	100-42-5	8260B	ND		1.0	0.12	ug/L	1
1,1,2,2-Tetrachloroethane	79-34-5	8260B	ND		1.0	0.16	ug/L	1
Tetrachloroethene	127-18-4	8260B	2.4		1.0	0.13	ug/L	1
Toluene	108-88-3	8260B	ND		1.0	0.33	ug/L	1
1,2,4-Trichlorobenzene	120-82-1	8260B	ND		1.0	0.51	ug/L	1
1,1,2-Trichloroethane	79-00-5	8260B	ND		1.0	0.21	ug/L	1
1,1,1-Trichloroethane	71-55-6	8260B	ND		1.0	0.074	ug/L	1
Trichloroethene	79-01-6	8260B	33		1.0	0.18	ug/L	1
Vinyl chloride	75-01-4	8260B	ND		1.0	0.054	ug/L	1
Xylenes (total)	1330-20-7	8260B	ND		1.0	0.33	ug/L	1

PQL = Practical quantitation limit
B = Detected in the method blank
E = Quantitation of compound exceeded the calibration range
ND = Not detected at or above the MDL
J = Estimated result < PQL and ≥ MDL
P = The RPD between two GC columns exceeds 40%
Where applicable, all soil sample analysis are reported on a dry weight basis unless flagged with a "W"
N = Recovery is out of criteria
H = Out of holding time

Volatile Organic Compounds by GC/MS

Client: ARCADIS U.S., Inc.
Laboratory ID: MA26019-031
Description: G4MW33 (012711)
Matrix: Aqueous
Date Sampled: 01/27/2011 0830
Date Received: 01/29/2011

Surrogate	Q	Run 1 % Recovery	Acceptance Limits
1,2-Dichloroethane-d4		75	70-130
Bromofluorobenzene		87	70-130
Toluene-d8		91	70-130

PQL = Practical quantitation limit
B = Detected in the method blank
E = Quantitation of compound exceeded the calibration range
ND = Not detected at or above the MDL
J = Estimated result < PQL and ≥ MDL
P = The RPD between two GC columns exceeds 40%
Where applicable, all soil sample analysis are reported on a dry weight basis unless flagged with a "W"
N = Recovery is out of criteria
H = Out of holding time

Semivolatile Organic Compounds by GC/MS

Client: ARCADIS U.S., Inc.
Laboratory ID: MA26019-031
Description: G4MW33 (012711)
Matrix: Aqueous
Date Sampled: 01/27/2011 0830
Date Received: 01/29/2011

Run	Prep Method	Analytical Method	Dilution	Analysis Date	Analyst	Prep Date	Batch
1	3520C	8270D	1	02/02/2011 1530	JGH	01/31/2011 1400	51711

Parameter	CAS Number	Analytical Method	Result	Q	PQL	MDL	Units	Run
Acenaphthene	83-32-9	8270D	ND		1.0	0.091	ug/L	1
Acenaphthylene	208-96-8	8270D	ND		1.0	0.16	ug/L	1
Anthracene	120-12-7	8270D	ND		1.0	0.13	ug/L	1
Benzo(a)anthracene	56-55-3	8270D	ND		1.0	0.15	ug/L	1
Benzo(a)pyrene	50-32-8	8270D	ND		1.0	0.16	ug/L	1
Benzo(b)fluoranthene	205-99-2	8270D	ND		1.0	0.20	ug/L	1
Benzo(g,h,i)perylene	191-24-2	8270D	ND		1.0	0.23	ug/L	1
Benzo(k)fluoranthene	207-08-9	8270D	ND		1.0	0.12	ug/L	1
4-Bromophenyl phenyl ether	101-55-3	8270D	ND		1.0	0.12	ug/L	1
Butyl benzyl phthalate	85-68-7	8270D	ND		5.1	1.7	ug/L	1
Carbazole	86-74-8	8270D	ND		1.0	0.25	ug/L	1
4-Chloro-3-methyl phenol	59-50-7	8270D	ND		1.0	0.22	ug/L	1
4-Chloroaniline	106-47-8	8270D	ND		1.0	0.13	ug/L	1
bis(2-Chloroethoxy)methane	111-91-1	8270D	ND		1.0	0.13	ug/L	1
bis(2-Chloroisopropyl)ether	108-60-1	8270D	ND		1.0	0.081	ug/L	1
2-Chloronaphthalene	91-58-7	8270D	ND		1.0	0.12	ug/L	1
2-Chlorophenol	95-57-8	8270D	ND		1.0	0.13	ug/L	1
4-Chlorophenyl phenyl ether	7005-72-3	8270D	ND		1.0	0.11	ug/L	1
Chrysene	218-01-9	8270D	ND		1.0	0.12	ug/L	1
Dibenzo(a,h)anthracene	53-70-3	8270D	ND		1.0	0.13	ug/L	1
Dibenzofuran	132-64-9	8270D	ND		1.0	0.16	ug/L	1
3,3'-Dichlorobenzidine	91-94-1	8270D	ND		5.1	0.82	ug/L	1
2,4-Dichlorophenol	120-83-2	8270D	ND		1.0	0.15	ug/L	1
Diethylphthalate	84-66-2	8270D	ND		5.1	1.7	ug/L	1
Dimethyl phthalate	131-11-3	8270D	ND		5.1	1.7	ug/L	1
2,4-Dimethylphenol	105-67-9	8270D	ND		1.0	0.31	ug/L	1
Di-n-butyl phthalate	84-74-2	8270D	ND		5.1	1.7	ug/L	1
4,6-Dinitro-2-methylphenol	534-52-1	8270D	ND		5.1	1.5	ug/L	1
2,4-Dinitrophenol	51-28-5	8270D	ND		5.1	0.25	ug/L	1
2,4-Dinitrotoluene	121-14-2	8270D	ND		2.0	0.45	ug/L	1
2,6-Dinitrotoluene	606-20-2	8270D	ND		2.0	0.40	ug/L	1
Di-n-octylphthalate	117-84-0	8270D	ND		5.1	1.7	ug/L	1
bis(2-Ethylhexyl)phthalate	117-81-7	8270D	ND		5.1	1.7	ug/L	1
Fluoranthene	206-44-0	8270D	ND		1.0	0.21	ug/L	1
Fluorene	86-73-7	8270D	ND		1.0	0.10	ug/L	1
Hexachlorobenzene	118-74-1	8270D	ND		1.0	0.21	ug/L	1
Hexachlorobutadiene	87-68-3	8270D	ND		1.0	0.091	ug/L	1
Hexachlorocyclopentadiene	77-47-4	8270D	ND		5.1	0.23	ug/L	1
Hexachloroethane	67-72-1	8270D	ND		1.0	0.11	ug/L	1
Indeno(1,2,3-c,d)pyrene	193-39-5	8270D	ND		1.0	0.23	ug/L	1
Isophorone	78-59-1	8270D	ND		1.0	0.081	ug/L	1
2-Methylnaphthalene	91-57-6	8270D	ND		1.0	0.081	ug/L	1
2-Methylphenol	95-48-7	8270D	ND		1.0	0.17	ug/L	1
3 & 4-Methylphenol	106-44-5	8270D	ND		2.0	0.58	ug/L	1

PQL = Practical quantitation limit
B = Detected in the method blank
E = Quantitation of compound exceeded the calibration range
ND = Not detected at or above the MDL
J = Estimated result < PQL and ≥ MDL
P = The RPD between two GC columns exceeds 40%
Where applicable, all soil sample analysis are reported on a dry weight basis unless flagged with a "W"
N = Recovery is out of criteria
H = Out of holding time

Semivolatile Organic Compounds by GC/MS

Client: ARCADIS U.S., Inc.
Laboratory ID: MA26019-031
Description: G4MW33 (012711)
Matrix: Aqueous
Date Sampled: 01/27/2011 0830
Date Received: 01/29/2011

Run	Prep Method	Analytical Method	Dilution	Analysis Date	Analyst	Prep Date	Batch
1	3520C	8270D	1	02/02/2011 1530	JGH	01/31/2011 1400	51711

Parameter	CAS Number	Analytical Method	Result	Q	PQL	MDL	Units	Run
Naphthalene	91-20-3	8270D	ND		1.0	0.071	ug/L	1
2-Nitroaniline	88-74-4	8270D	ND		2.0	0.56	ug/L	1
3-Nitroaniline	99-09-2	8270D	ND		2.0	0.78	ug/L	1
4-Nitroaniline	100-01-6	8270D	ND		2.0	0.39	ug/L	1
Nitrobenzene	98-95-3	8270D	ND		1.0	0.10	ug/L	1
2-Nitrophenol	88-75-5	8270D	ND		2.0	0.27	ug/L	1
4-Nitrophenol	100-02-7	8270D	ND		5.1	0.65	ug/L	1
N-Nitrosodi-n-propylamine	621-64-7	8270D	ND		1.0	0.081	ug/L	1
N-Nitrosodiphenylamine (Diphenylamine)	86-30-6	8270D	ND		1.0	0.38	ug/L	1
Pentachlorophenol	87-86-5	8270D	ND		5.1	0.55	ug/L	1
Phenanthrene	85-01-8	8270D	ND		1.0	0.18	ug/L	1
Phenol	108-95-2	8270D	ND		1.0	0.11	ug/L	1
Pyrene	129-00-0	8270D	ND		1.0	0.16	ug/L	1
2,4,5-Trichlorophenol	95-95-4	8270D	ND		1.0	0.18	ug/L	1
2,4,6-Trichlorophenol	88-06-2	8270D	ND		1.0	0.22	ug/L	1

Surrogate	Q	Run 1 % Recovery	Acceptance Limits
2-Fluorobiphenyl		49	37-129
2-Fluorophenol		57	24-127
Nitrobenzene-d5		51	38-127
Phenol-d5		51	28-128
Terphenyl-d14		44	10-148
2,4,6-Tribromophenol		60	41-144

PQL = Practical quantitation limit
B = Detected in the method blank
E = Quantitation of compound exceeded the calibration range
ND = Not detected at or above the MDL
J = Estimated result < PQL and ≥ MDL
P = The RPD between two GC columns exceeds 40%
Where applicable, all soil sample analysis are reported on a dry weight basis unless flagged with a "W"
N = Recovery is out of criteria
H = Out of holding time

Dissolved RCRA Metals

Client: ARCADIS U.S., Inc.
Laboratory ID: MA26019-031
Description: G4MW33 (012711)
Matrix: Aqueous
Date Sampled: 01/27/2011 0830
Date Received: 01/29/2011

Run	Prep Method	Analytical Method	Dilution	Analysis Date	Analyst	Prep Date	Batch
1		7470A	1	02/01/2011 1527	BNW	02/01/2011 1020	51805
1	3005A	6010C	1	02/02/2011 0108	CDF	01/31/2011 1050	51696

Parameter	CAS Number	Analytical Method	Result	Q	PQL	MDL	Units	Run
Dissolved Arsenic	7440-38-2	6010C	ND		0.010	0.0040	mg/L	1
Dissolved Barium	7440-39-3	6010C	0.042		0.025	0.0075	mg/L	1
Dissolved Cadmium	7440-43-9	6010C	ND		0.0020	0.00060	mg/L	1
Dissolved Chromium	7440-47-3	6010C	ND		0.0050	0.0021	mg/L	1
Dissolved Lead	7439-92-1	6010C	ND		0.010	0.0019	mg/L	1
Dissolved Mercury	7439-97-6	7470A	ND		0.00010	0.000053	mg/L	1
Dissolved Selenium	7782-49-2	6010C	ND		0.010	0.0026	mg/L	1
Dissolved Silver	7440-22-4	6010C	ND		0.0050	0.00040	mg/L	1

PQL = Practical quantitation limit
B = Detected in the method blank
E = Quantitation of compound exceeded the calibration range
ND = Not detected at or above the MDL
J = Estimated result < PQL and ≥ MDL
P = The RPD between two GC columns exceeds 40%
Where applicable, all soil sample analysis are reported on a dry weight basis unless flagged with a "W"
N = Recovery is out of criteria
H = Out of holding time

RCRA Metals

Client: ARCADIS U.S., Inc.
Laboratory ID: MA26019-031
Description: G4MW33 (012711)
Matrix: Aqueous
Date Sampled: 01/27/2011 0830
Date Received: 01/29/2011

Run	Prep Method	Analytical Method	Dilution	Analysis Date	Analyst	Prep Date	Batch
1		7470A	1	02/01/2011 1524	BNW	02/01/2011 1020	51805
1	3005A	6010C	1	02/02/2011 0104	CDF	01/31/2011 1050	51696

Parameter	CAS Number	Analytical Method	Result	Q	PQL	MDL	Units	Run
Arsenic	7440-38-2	6010C	0.0052	J	0.010	0.0040	mg/L	1
Barium	7440-39-3	6010C	0.042		0.025	0.0075	mg/L	1
Cadmium	7440-43-9	6010C	ND		0.0020	0.00060	mg/L	1
Chromium	7440-47-3	6010C	0.0036	J	0.0050	0.0021	mg/L	1
Lead	7439-92-1	6010C	ND		0.010	0.0019	mg/L	1
Mercury	7439-97-6	7470A	ND		0.00010	0.000053	mg/L	1
Selenium	7782-49-2	6010C	ND		0.010	0.0026	mg/L	1
Silver	7440-22-4	6010C	ND		0.0050	0.00040	mg/L	1

PQL = Practical quantitation limit
B = Detected in the method blank
E = Quantitation of compound exceeded the calibration range
ND = Not detected at or above the MDL
J = Estimated result < PQL and ≥ MDL
P = The RPD between two GC columns exceeds 40%
Where applicable, all soil sample analysis are reported on a dry weight basis unless flagged with a "W"
N = Recovery is out of criteria
H = Out of holding time

Volatile Organic Compounds by GC/MS

Client: ARCADIS U.S., Inc.
Laboratory ID: MA26019-032
Description: G4MW11 (012711)
Matrix: Aqueous
Date Sampled: 01/27/2011 0945
Date Received: 01/29/2011

Run	Prep Method	Analytical Method	Dilution	Analysis Date	Analyst	Prep Date	Batch
1	5030B	8260B	1	02/01/2011 0850	DLB		52836

Parameter	CAS Number	Analytical Method	Result	Q	PQL	MDL	Units	Run
Acetone	67-64-1	8260B	ND		20	6.7	ug/L	1
Benzene	71-43-2	8260B	ND		1.0	0.13	ug/L	1
Bromodichloromethane	75-27-4	8260B	ND		1.0	0.33	ug/L	1
Bromoform	75-25-2	8260B	ND		1.0	0.66	ug/L	1
Bromomethane (Methyl bromide)	74-83-9	8260B	ND		2.0	0.80	ug/L	1
2-Butanone (MEK)	78-93-3	8260B	ND		10	2.0	ug/L	1
Carbon disulfide	75-15-0	8260B	ND		1.0	0.097	ug/L	1
Carbon tetrachloride	56-23-5	8260B	ND		1.0	0.14	ug/L	1
Chlorobenzene	108-90-7	8260B	ND		2.0	0.33	ug/L	1
Chloroethane	75-00-3	8260B	ND		2.0	0.47	ug/L	1
Chloroform	67-66-3	8260B	ND		1.0	0.33	ug/L	1
Chloromethane (Methyl chloride)	74-87-3	8260B	ND		1.0	0.35	ug/L	1
Dibromochloromethane	124-48-1	8260B	ND		1.0	0.33	ug/L	1
1,4-Dichlorobenzene	106-46-7	8260B	ND		1.0	0.33	ug/L	1
1,3-Dichlorobenzene	541-73-1	8260B	ND		1.0	0.33	ug/L	1
1,2-Dichlorobenzene	95-50-1	8260B	ND		1.0	0.33	ug/L	1
1,2-Dichloroethane	107-06-2	8260B	ND		1.0	0.15	ug/L	1
1,1-Dichloroethane	75-34-3	8260B	0.17	J	1.0	0.13	ug/L	1
trans-1,2-Dichloroethene	156-60-5	8260B	4.3		1.0	0.21	ug/L	1
cis-1,2-Dichloroethene	156-59-2	8260B	14		1.0	0.12	ug/L	1
1,1-Dichloroethene	75-35-4	8260B	0.49	J	1.0	0.16	ug/L	1
1,2-Dichloropropane	78-87-5	8260B	ND		1.0	0.19	ug/L	1
trans-1,3-Dichloropropene	10061-02-6	8260B	ND		1.0	0.11	ug/L	1
cis-1,3-Dichloropropene	10061-01-5	8260B	ND		1.0	0.092	ug/L	1
Ethylbenzene	100-41-4	8260B	ND		1.0	0.33	ug/L	1
2-Hexanone	591-78-6	8260B	ND		10	0.27	ug/L	1
Methyl tertiary butyl ether (MTBE)	1634-04-4	8260B	ND		1.0	0.40	ug/L	1
4-Methyl-2-pentanone	108-10-1	8260B	ND		10	0.31	ug/L	1
Methylene chloride	75-09-2	8260B	ND		1.0	0.33	ug/L	1
Styrene	100-42-5	8260B	ND		1.0	0.12	ug/L	1
1,1,2,2-Tetrachloroethane	79-34-5	8260B	ND		1.0	0.16	ug/L	1
Tetrachloroethene	127-18-4	8260B	ND		1.0	0.13	ug/L	1
Toluene	108-88-3	8260B	ND		1.0	0.33	ug/L	1
1,2,4-Trichlorobenzene	120-82-1	8260B	ND		1.0	0.51	ug/L	1
1,1,2-Trichloroethane	79-00-5	8260B	ND		1.0	0.21	ug/L	1
1,1,1-Trichloroethane	71-55-6	8260B	ND		1.0	0.074	ug/L	1
Trichloroethene	79-01-6	8260B	6.2		1.0	0.18	ug/L	1
Vinyl chloride	75-01-4	8260B	ND		1.0	0.054	ug/L	1
Xylenes (total)	1330-20-7	8260B	ND		1.0	0.33	ug/L	1

PQL = Practical quantitation limit
B = Detected in the method blank
E = Quantitation of compound exceeded the calibration range
ND = Not detected at or above the MDL
J = Estimated result < PQL and ≥ MDL
P = The RPD between two GC columns exceeds 40%
Where applicable, all soil sample analysis are reported on a dry weight basis unless flagged with a "W"
N = Recovery is out of criteria
H = Out of holding time

Volatile Organic Compounds by GC/MS

Client: ARCADIS U.S., Inc.
Laboratory ID: MA26019-032
Description: G4MW11 (012711)
Matrix: Aqueous
Date Sampled: 01/27/2011 0945
Date Received: 01/29/2011

Surrogate	Q	Run 1 % Recovery	Acceptance Limits
1,2-Dichloroethane-d4		74	70-130
Bromofluorobenzene		86	70-130
Toluene-d8		92	70-130

PQL = Practical quantitation limit
B = Detected in the method blank
E = Quantitation of compound exceeded the calibration range
ND = Not detected at or above the MDL
J = Estimated result < PQL and ≥ MDL
P = The RPD between two GC columns exceeds 40%
Where applicable, all soil sample analysis are reported on a dry weight basis unless flagged with a "W"
N = Recovery is out of criteria
H = Out of holding time

Semivolatile Organic Compounds by GC/MS

Client: ARCADIS U.S., Inc.
Laboratory ID: MA26019-032
Description: G4MW11 (012711)
Matrix: Aqueous
Date Sampled: 01/27/2011 0945
Date Received: 01/29/2011

Run	Prep Method	Analytical Method	Dilution	Analysis Date	Analyst	Prep Date	Batch
1	3520C	8270D	1	02/02/2011 1836	JGH	01/31/2011 1400	51711

Parameter	CAS Number	Analytical Method	Result	Q	PQL	MDL	Units	Run
Acenaphthene	83-32-9	8270D	ND		1.0	0.091	ug/L	1
Acenaphthylene	208-96-8	8270D	ND		1.0	0.16	ug/L	1
Anthracene	120-12-7	8270D	ND		1.0	0.13	ug/L	1
Benzo(a)anthracene	56-55-3	8270D	ND		1.0	0.15	ug/L	1
Benzo(a)pyrene	50-32-8	8270D	ND		1.0	0.16	ug/L	1
Benzo(b)fluoranthene	205-99-2	8270D	ND		1.0	0.20	ug/L	1
Benzo(g,h,i)perylene	191-24-2	8270D	ND		1.0	0.23	ug/L	1
Benzo(k)fluoranthene	207-08-9	8270D	ND		1.0	0.12	ug/L	1
4-Bromophenyl phenyl ether	101-55-3	8270D	ND		1.0	0.12	ug/L	1
Butyl benzyl phthalate	85-68-7	8270D	ND		5.1	1.7	ug/L	1
Carbazole	86-74-8	8270D	ND		1.0	0.25	ug/L	1
4-Chloro-3-methyl phenol	59-50-7	8270D	ND		1.0	0.22	ug/L	1
4-Chloroaniline	106-47-8	8270D	ND		1.0	0.13	ug/L	1
bis(2-Chloroethoxy)methane	111-91-1	8270D	ND		1.0	0.13	ug/L	1
bis(2-Chloroisopropyl)ether	108-60-1	8270D	ND		1.0	0.081	ug/L	1
2-Chloronaphthalene	91-58-7	8270D	ND		1.0	0.12	ug/L	1
2-Chlorophenol	95-57-8	8270D	ND		1.0	0.13	ug/L	1
4-Chlorophenyl phenyl ether	7005-72-3	8270D	ND		1.0	0.11	ug/L	1
Chrysene	218-01-9	8270D	ND		1.0	0.12	ug/L	1
Dibenzo(a,h)anthracene	53-70-3	8270D	ND		1.0	0.13	ug/L	1
Dibenzofuran	132-64-9	8270D	ND		1.0	0.16	ug/L	1
3,3'-Dichlorobenzidine	91-94-1	8270D	ND		5.1	0.82	ug/L	1
2,4-Dichlorophenol	120-83-2	8270D	ND		1.0	0.15	ug/L	1
Diethylphthalate	84-66-2	8270D	ND		5.1	1.7	ug/L	1
Dimethyl phthalate	131-11-3	8270D	ND		5.1	1.7	ug/L	1
2,4-Dimethylphenol	105-67-9	8270D	ND		1.0	0.31	ug/L	1
Di-n-butyl phthalate	84-74-2	8270D	ND		5.1	1.7	ug/L	1
4,6-Dinitro-2-methylphenol	534-52-1	8270D	ND		5.1	1.5	ug/L	1
2,4-Dinitrophenol	51-28-5	8270D	ND		5.1	0.25	ug/L	1
2,4-Dinitrotoluene	121-14-2	8270D	ND		2.0	0.45	ug/L	1
2,6-Dinitrotoluene	606-20-2	8270D	ND		2.0	0.40	ug/L	1
Di-n-octylphthalate	117-84-0	8270D	ND		5.1	1.7	ug/L	1
bis(2-Ethylhexyl)phthalate	117-81-7	8270D	ND		5.1	1.7	ug/L	1
Fluoranthene	206-44-0	8270D	ND		1.0	0.21	ug/L	1
Fluorene	86-73-7	8270D	ND		1.0	0.10	ug/L	1
Hexachlorobenzene	118-74-1	8270D	ND		1.0	0.21	ug/L	1
Hexachlorobutadiene	87-68-3	8270D	ND		1.0	0.091	ug/L	1
Hexachlorocyclopentadiene	77-47-4	8270D	ND		5.1	0.23	ug/L	1
Hexachloroethane	67-72-1	8270D	ND		1.0	0.11	ug/L	1
Indeno(1,2,3-c,d)pyrene	193-39-5	8270D	ND		1.0	0.23	ug/L	1
Isophorone	78-59-1	8270D	ND		1.0	0.081	ug/L	1
2-Methylnaphthalene	91-57-6	8270D	ND		1.0	0.081	ug/L	1
2-Methylphenol	95-48-7	8270D	ND		1.0	0.17	ug/L	1
3 & 4-Methylphenol	106-44-5	8270D	ND		2.0	0.58	ug/L	1

PQL = Practical quantitation limit
B = Detected in the method blank
E = Quantitation of compound exceeded the calibration range
ND = Not detected at or above the MDL
J = Estimated result < PQL and ≥ MDL
P = The RPD between two GC columns exceeds 40%
Where applicable, all soil sample analysis are reported on a dry weight basis unless flagged with a "W"
N = Recovery is out of criteria
H = Out of holding time

Semivolatile Organic Compounds by GC/MS

Client: ARCADIS U.S., Inc.
Laboratory ID: MA26019-032
Description: G4MW11 (012711)
Matrix: Aqueous
Date Sampled: 01/27/2011 0945
Date Received: 01/29/2011

Run	Prep Method	Analytical Method	Dilution	Analysis Date	Analyst	Prep Date	Batch
1	3520C	8270D	1	02/02/2011 1836	JGH	01/31/2011 1400	51711

Parameter	CAS Number	Analytical Method	Result	Q	PQL	MDL	Units	Run
Naphthalene	91-20-3	8270D	ND		1.0	0.071	ug/L	1
2-Nitroaniline	88-74-4	8270D	ND		2.0	0.56	ug/L	1
3-Nitroaniline	99-09-2	8270D	ND		2.0	0.78	ug/L	1
4-Nitroaniline	100-01-6	8270D	ND		2.0	0.39	ug/L	1
Nitrobenzene	98-95-3	8270D	ND		1.0	0.10	ug/L	1
2-Nitrophenol	88-75-5	8270D	ND		2.0	0.27	ug/L	1
4-Nitrophenol	100-02-7	8270D	ND		5.1	0.65	ug/L	1
N-Nitrosodi-n-propylamine	621-64-7	8270D	ND		1.0	0.081	ug/L	1
N-Nitrosodiphenylamine (Diphenylamine)	86-30-6	8270D	ND		1.0	0.38	ug/L	1
Pentachlorophenol	87-86-5	8270D	ND		5.1	0.55	ug/L	1
Phenanthrene	85-01-8	8270D	ND		1.0	0.18	ug/L	1
Phenol	108-95-2	8270D	ND		1.0	0.11	ug/L	1
Pyrene	129-00-0	8270D	ND		1.0	0.16	ug/L	1
2,4,5-Trichlorophenol	95-95-4	8270D	ND		1.0	0.18	ug/L	1
2,4,6-Trichlorophenol	88-06-2	8270D	ND		1.0	0.22	ug/L	1

Surrogate	Q	Run 1 % Recovery	Acceptance Limits
2-Fluorobiphenyl		39	37-129
2-Fluorophenol		57	24-127
Nitrobenzene-d5		48	38-127
Phenol-d5		52	28-128
Terphenyl-d14		52	10-148
2,4,6-Tribromophenol		65	41-144

PQL = Practical quantitation limit
B = Detected in the method blank
E = Quantitation of compound exceeded the calibration range
ND = Not detected at or above the MDL
J = Estimated result < PQL and ≥ MDL
P = The RPD between two GC columns exceeds 40%
Where applicable, all soil sample analysis are reported on a dry weight basis unless flagged with a "W"
N = Recovery is out of criteria
H = Out of holding time

Dissolved RCRA Metals

Client: ARCADIS U.S., Inc.
Laboratory ID: MA26019-032
Description: G4MW11 (012711)
Matrix: Aqueous
Date Sampled: 01/27/2011 0945
Date Received: 01/29/2011

Run	Prep Method	Analytical Method	Dilution	Analysis Date	Analyst	Prep Date	Batch
1		7470A	1	02/01/2011 1532	BNW	02/01/2011 1020	51805
1	3005A	6010C	1	02/02/2011 0123	CDF	01/31/2011 1050	51696

Parameter	CAS Number	Analytical Method	Result	Q	PQL	MDL	Units	Run
Dissolved Arsenic	7440-38-2	6010C	ND		0.010	0.0040	mg/L	1
Dissolved Barium	7440-39-3	6010C	0.036		0.025	0.0075	mg/L	1
Dissolved Cadmium	7440-43-9	6010C	ND		0.0020	0.00060	mg/L	1
Dissolved Chromium	7440-47-3	6010C	ND		0.0050	0.0021	mg/L	1
Dissolved Lead	7439-92-1	6010C	ND		0.010	0.0019	mg/L	1
Dissolved Mercury	7439-97-6	7470A	ND		0.00010	0.000053	mg/L	1
Dissolved Selenium	7782-49-2	6010C	ND		0.010	0.0026	mg/L	1
Dissolved Silver	7440-22-4	6010C	ND		0.0050	0.00040	mg/L	1

PQL = Practical quantitation limit
B = Detected in the method blank
E = Quantitation of compound exceeded the calibration range
ND = Not detected at or above the MDL
J = Estimated result < PQL and ≥ MDL
P = The RPD between two GC columns exceeds 40%
Where applicable, all soil sample analysis are reported on a dry weight basis unless flagged with a "W"
N = Recovery is out of criteria
H = Out of holding time

RCRA Metals

Client: ARCADIS U.S., Inc.
Laboratory ID: MA26019-032
Description: G4MW11 (012711)
Matrix: Aqueous
Date Sampled: 01/27/2011 0945
Date Received: 01/29/2011

Run	Prep Method	Analytical Method	Dilution	Analysis Date	Analyst	Prep Date	Batch
1		7470A	1	02/01/2011 1529	BNW	02/01/2011 1020	51805
1	3005A	6010C	1	02/02/2011 0112	CDF	01/31/2011 1050	51696

Parameter	CAS Number	Analytical Method	Result	Q	PQL	MDL	Units	Run
Arsenic	7440-38-2	6010C	0.0052	J	0.010	0.0040	mg/L	1
Barium	7440-39-3	6010C	0.037		0.025	0.0075	mg/L	1
Cadmium	7440-43-9	6010C	ND		0.0020	0.00060	mg/L	1
Chromium	7440-47-3	6010C	ND		0.0050	0.0021	mg/L	1
Lead	7439-92-1	6010C	ND		0.010	0.0019	mg/L	1
Mercury	7439-97-6	7470A	ND		0.00010	0.000053	mg/L	1
Selenium	7782-49-2	6010C	ND		0.010	0.0026	mg/L	1
Silver	7440-22-4	6010C	0.00063	J	0.0050	0.00040	mg/L	1

PQL = Practical quantitation limit
B = Detected in the method blank
E = Quantitation of compound exceeded the calibration range
ND = Not detected at or above the MDL
J = Estimated result < PQL and ≥ MDL
P = The RPD between two GC columns exceeds 40%
Where applicable, all soil sample analysis are reported on a dry weight basis unless flagged with a "W"
N = Recovery is out of criteria
H = Out of holding time

Volatile Organic Compounds by GC/MS

Client: ARCADIS U.S., Inc.
Laboratory ID: MA26019-033
Description: G4MW25 (012711)
Matrix: Aqueous
Date Sampled: 01/27/2011 1000
Date Received: 01/29/2011

Run	Prep Method	Analytical Method	Dilution	Analysis Date	Analyst	Prep Date	Batch
1	5030B	8260B	1	02/01/2011 1522	DLB		51987

Parameter	CAS Number	Analytical Method	Result	Q	PQL	MDL	Units	Run
Acetone	67-64-1	8260B	ND		20	6.7	ug/L	1
Benzene	71-43-2	8260B	ND		1.0	0.13	ug/L	1
Bromodichloromethane	75-27-4	8260B	ND		1.0	0.33	ug/L	1
Bromoform	75-25-2	8260B	ND		1.0	0.66	ug/L	1
Bromomethane (Methyl bromide)	74-83-9	8260B	ND		2.0	0.80	ug/L	1
2-Butanone (MEK)	78-93-3	8260B	ND		10	2.0	ug/L	1
Carbon disulfide	75-15-0	8260B	ND		1.0	0.097	ug/L	1
Carbon tetrachloride	56-23-5	8260B	ND		1.0	0.14	ug/L	1
Chlorobenzene	108-90-7	8260B	ND		2.0	0.33	ug/L	1
Chloroethane	75-00-3	8260B	ND		2.0	0.47	ug/L	1
Chloroform	67-66-3	8260B	ND		1.0	0.33	ug/L	1
Chloromethane (Methyl chloride)	74-87-3	8260B	ND		1.0	0.35	ug/L	1
Dibromochloromethane	124-48-1	8260B	ND		1.0	0.33	ug/L	1
1,4-Dichlorobenzene	106-46-7	8260B	ND		1.0	0.33	ug/L	1
1,3-Dichlorobenzene	541-73-1	8260B	ND		1.0	0.33	ug/L	1
1,2-Dichlorobenzene	95-50-1	8260B	ND		1.0	0.33	ug/L	1
1,2-Dichloroethane	107-06-2	8260B	ND		1.0	0.15	ug/L	1
1,1-Dichloroethane	75-34-3	8260B	ND		1.0	0.13	ug/L	1
trans-1,2-Dichloroethene	156-60-5	8260B	2.4		1.0	0.21	ug/L	1
cis-1,2-Dichloroethene	156-59-2	8260B	8.3		1.0	0.12	ug/L	1
1,1-Dichloroethene	75-35-4	8260B	ND		1.0	0.16	ug/L	1
1,2-Dichloropropane	78-87-5	8260B	ND		1.0	0.19	ug/L	1
trans-1,3-Dichloropropene	10061-02-6	8260B	ND		1.0	0.11	ug/L	1
cis-1,3-Dichloropropene	10061-01-5	8260B	ND		1.0	0.092	ug/L	1
Ethylbenzene	100-41-4	8260B	ND		1.0	0.33	ug/L	1
2-Hexanone	591-78-6	8260B	ND		10	0.27	ug/L	1
Methyl tertiary butyl ether (MTBE)	1634-04-4	8260B	ND		1.0	0.40	ug/L	1
4-Methyl-2-pentanone	108-10-1	8260B	ND		10	0.31	ug/L	1
Methylene chloride	75-09-2	8260B	ND		1.0	0.33	ug/L	1
Styrene	100-42-5	8260B	ND		1.0	0.12	ug/L	1
1,1,2,2-Tetrachloroethane	79-34-5	8260B	ND		1.0	0.16	ug/L	1
Tetrachloroethene	127-18-4	8260B	ND		1.0	0.13	ug/L	1
Toluene	108-88-3	8260B	ND		1.0	0.33	ug/L	1
1,2,4-Trichlorobenzene	120-82-1	8260B	ND		1.0	0.51	ug/L	1
1,1,2-Trichloroethane	79-00-5	8260B	ND		1.0	0.21	ug/L	1
1,1,1-Trichloroethane	71-55-6	8260B	ND		1.0	0.074	ug/L	1
Trichloroethene	79-01-6	8260B	5.8		1.0	0.18	ug/L	1
Vinyl chloride	75-01-4	8260B	ND		1.0	0.054	ug/L	1
Xylenes (total)	1330-20-7	8260B	ND		1.0	0.33	ug/L	1

PQL = Practical quantitation limit
B = Detected in the method blank
E = Quantitation of compound exceeded the calibration range
ND = Not detected at or above the MDL
J = Estimated result < PQL and ≥ MDL
P = The RPD between two GC columns exceeds 40%
Where applicable, all soil sample analysis are reported on a dry weight basis unless flagged with a "W"
N = Recovery is out of criteria
H = Out of holding time

Volatile Organic Compounds by GC/MS

Client: ARCADIS U.S., Inc.
Laboratory ID: MA26019-033
Description: G4MW25 (012711)
Matrix: Aqueous
Date Sampled: 01/27/2011 1000
Date Received: 01/29/2011

Surrogate	Q	Run 1 % Recovery	Acceptance Limits
1,2-Dichloroethane-d4		115	70-130
Bromofluorobenzene		113	70-130
Toluene-d8		108	70-130

PQL = Practical quantitation limit
B = Detected in the method blank
E = Quantitation of compound exceeded the calibration range
ND = Not detected at or above the MDL
J = Estimated result < PQL and ≥ MDL
P = The RPD between two GC columns exceeds 40%
Where applicable, all soil sample analysis are reported on a dry weight basis unless flagged with a "W"
N = Recovery is out of criteria
H = Out of holding time

Semivolatile Organic Compounds by GC/MS

Client: ARCADIS U.S., Inc.
Laboratory ID: MA26019-033
Description: G4MW25 (012711)
Matrix: Aqueous
Date Sampled: 01/27/2011 1000
Date Received: 01/29/2011

Run	Prep Method	Analytical Method	Dilution	Analysis Date	Analyst	Prep Date	Batch
1	3520C	8270D	1	02/02/2011 1854	JGH	01/31/2011 1400	51711

Parameter	CAS Number	Analytical Method	Result	Q	PQL	MDL	Units	Run
Acenaphthene	83-32-9	8270D	ND		1.0	0.091	ug/L	1
Acenaphthylene	208-96-8	8270D	ND		1.0	0.16	ug/L	1
Anthracene	120-12-7	8270D	ND		1.0	0.13	ug/L	1
Benzo(a)anthracene	56-55-3	8270D	ND		1.0	0.15	ug/L	1
Benzo(a)pyrene	50-32-8	8270D	ND		1.0	0.16	ug/L	1
Benzo(b)fluoranthene	205-99-2	8270D	ND		1.0	0.20	ug/L	1
Benzo(g,h,i)perylene	191-24-2	8270D	ND		1.0	0.23	ug/L	1
Benzo(k)fluoranthene	207-08-9	8270D	ND		1.0	0.12	ug/L	1
4-Bromophenyl phenyl ether	101-55-3	8270D	ND		1.0	0.12	ug/L	1
Butyl benzyl phthalate	85-68-7	8270D	ND		5.1	1.7	ug/L	1
Carbazole	86-74-8	8270D	ND		1.0	0.25	ug/L	1
4-Chloro-3-methyl phenol	59-50-7	8270D	ND		1.0	0.22	ug/L	1
4-Chloroaniline	106-47-8	8270D	ND		1.0	0.13	ug/L	1
bis(2-Chloroethoxy)methane	111-91-1	8270D	ND		1.0	0.13	ug/L	1
bis(2-Chloroisopropyl)ether	108-60-1	8270D	ND		1.0	0.081	ug/L	1
2-Chloronaphthalene	91-58-7	8270D	ND		1.0	0.12	ug/L	1
2-Chlorophenol	95-57-8	8270D	ND		1.0	0.13	ug/L	1
4-Chlorophenyl phenyl ether	7005-72-3	8270D	ND		1.0	0.11	ug/L	1
Chrysene	218-01-9	8270D	ND		1.0	0.12	ug/L	1
Dibenzo(a,h)anthracene	53-70-3	8270D	ND		1.0	0.13	ug/L	1
Dibenzofuran	132-64-9	8270D	ND		1.0	0.16	ug/L	1
3,3'-Dichlorobenzidine	91-94-1	8270D	ND		5.1	0.82	ug/L	1
2,4-Dichlorophenol	120-83-2	8270D	ND		1.0	0.15	ug/L	1
Diethylphthalate	84-66-2	8270D	ND		5.1	1.7	ug/L	1
Dimethyl phthalate	131-11-3	8270D	ND		5.1	1.7	ug/L	1
2,4-Dimethylphenol	105-67-9	8270D	ND		1.0	0.31	ug/L	1
Di-n-butyl phthalate	84-74-2	8270D	ND		5.1	1.7	ug/L	1
4,6-Dinitro-2-methylphenol	534-52-1	8270D	ND		5.1	1.5	ug/L	1
2,4-Dinitrophenol	51-28-5	8270D	ND		5.1	0.25	ug/L	1
2,4-Dinitrotoluene	121-14-2	8270D	ND		2.0	0.45	ug/L	1
2,6-Dinitrotoluene	606-20-2	8270D	ND		2.0	0.40	ug/L	1
Di-n-octylphthalate	117-84-0	8270D	ND		5.1	1.7	ug/L	1
bis(2-Ethylhexyl)phthalate	117-81-7	8270D	ND		5.1	1.7	ug/L	1
Fluoranthene	206-44-0	8270D	ND		1.0	0.21	ug/L	1
Fluorene	86-73-7	8270D	ND		1.0	0.10	ug/L	1
Hexachlorobenzene	118-74-1	8270D	ND		1.0	0.21	ug/L	1
Hexachlorobutadiene	87-68-3	8270D	ND		1.0	0.091	ug/L	1
Hexachlorocyclopentadiene	77-47-4	8270D	ND		5.1	0.23	ug/L	1
Hexachloroethane	67-72-1	8270D	ND		1.0	0.11	ug/L	1
Indeno(1,2,3-c,d)pyrene	193-39-5	8270D	ND		1.0	0.23	ug/L	1
Isophorone	78-59-1	8270D	ND		1.0	0.081	ug/L	1
2-Methylnaphthalene	91-57-6	8270D	ND		1.0	0.081	ug/L	1
2-Methylphenol	95-48-7	8270D	ND		1.0	0.17	ug/L	1
3 & 4-Methylphenol	106-44-5	8270D	ND		2.0	0.58	ug/L	1

PQL = Practical quantitation limit
B = Detected in the method blank
E = Quantitation of compound exceeded the calibration range
ND = Not detected at or above the MDL
J = Estimated result < PQL and ≥ MDL
P = The RPD between two GC columns exceeds 40%
Where applicable, all soil sample analysis are reported on a dry weight basis unless flagged with a "W"
N = Recovery is out of criteria
H = Out of holding time

Semivolatile Organic Compounds by GC/MS

Client: ARCADIS U.S., Inc.
Laboratory ID: MA26019-033
Description: G4MW25 (012711)
Matrix: Aqueous
Date Sampled: 01/27/2011 1000
Date Received: 01/29/2011

Run	Prep Method	Analytical Method	Dilution	Analysis Date	Analyst	Prep Date	Batch
1	3520C	8270D	1	02/02/2011 1854	JGH	01/31/2011 1400	51711

Parameter	CAS Number	Analytical Method	Result	Q	PQL	MDL	Units	Run
Naphthalene	91-20-3	8270D	ND		1.0	0.071	ug/L	1
2-Nitroaniline	88-74-4	8270D	ND		2.0	0.56	ug/L	1
3-Nitroaniline	99-09-2	8270D	ND		2.0	0.78	ug/L	1
4-Nitroaniline	100-01-6	8270D	ND		2.0	0.39	ug/L	1
Nitrobenzene	98-95-3	8270D	ND		1.0	0.10	ug/L	1
2-Nitrophenol	88-75-5	8270D	ND		2.0	0.27	ug/L	1
4-Nitrophenol	100-02-7	8270D	ND		5.1	0.65	ug/L	1
N-Nitrosodi-n-propylamine	621-64-7	8270D	ND		1.0	0.081	ug/L	1
N-Nitrosodiphenylamine (Diphenylamine)	86-30-6	8270D	ND		1.0	0.38	ug/L	1
Pentachlorophenol	87-86-5	8270D	ND		5.1	0.55	ug/L	1
Phenanthrene	85-01-8	8270D	ND		1.0	0.18	ug/L	1
Phenol	108-95-2	8270D	ND		1.0	0.11	ug/L	1
Pyrene	129-00-0	8270D	ND		1.0	0.16	ug/L	1
2,4,5-Trichlorophenol	95-95-4	8270D	ND		1.0	0.18	ug/L	1
2,4,6-Trichlorophenol	88-06-2	8270D	ND		1.0	0.22	ug/L	1

Surrogate	Q	Run 1 % Recovery	Acceptance Limits
2-Fluorobiphenyl		43	37-129
2-Fluorophenol		59	24-127
Nitrobenzene-d5		53	38-127
Phenol-d5		54	28-128
Terphenyl-d14		46	10-148
2,4,6-Tribromophenol		58	41-144

PQL = Practical quantitation limit
B = Detected in the method blank
E = Quantitation of compound exceeded the calibration range
ND = Not detected at or above the MDL
J = Estimated result < PQL and ≥ MDL
P = The RPD between two GC columns exceeds 40%
Where applicable, all soil sample analysis are reported on a dry weight basis unless flagged with a "W"
N = Recovery is out of criteria
H = Out of holding time

Dissolved RCRA Metals

Client: ARCADIS U.S., Inc.
Laboratory ID: MA26019-033
Description: G4MW25 (012711)
Matrix: Aqueous
Date Sampled: 01/27/2011 1000
Date Received: 01/29/2011

Run	Prep Method	Analytical Method	Dilution	Analysis Date	Analyst	Prep Date	Batch
1		7470A	1	02/01/2011 1541	BNW	02/01/2011 1020	51805
1	3005A	6010C	1	02/02/2011 0131	CDF	01/31/2011 1050	51696

Parameter	CAS Number	Analytical Method	Result	Q	PQL	MDL	Units	Run
Dissolved Arsenic	7440-38-2	6010C	0.0040	J	0.010	0.0040	mg/L	1
Dissolved Barium	7440-39-3	6010C	0.058		0.025	0.0075	mg/L	1
Dissolved Cadmium	7440-43-9	6010C	ND		0.0020	0.00060	mg/L	1
Dissolved Chromium	7440-47-3	6010C	ND		0.0050	0.0021	mg/L	1
Dissolved Lead	7439-92-1	6010C	ND		0.010	0.0019	mg/L	1
Dissolved Mercury	7439-97-6	7470A	ND		0.00010	0.000053	mg/L	1
Dissolved Selenium	7782-49-2	6010C	ND		0.010	0.0026	mg/L	1
Dissolved Silver	7440-22-4	6010C	ND		0.0050	0.00040	mg/L	1

PQL = Practical quantitation limit
B = Detected in the method blank
E = Quantitation of compound exceeded the calibration range
ND = Not detected at or above the MDL
J = Estimated result < PQL and ≥ MDL
P = The RPD between two GC columns exceeds 40%
Where applicable, all soil sample analysis are reported on a dry weight basis unless flagged with a "W"
N = Recovery is out of criteria
H = Out of holding time

RCRA Metals

Client: ARCADIS U.S., Inc.
Laboratory ID: MA26019-033
Description: G4MW25 (012711)
Matrix: Aqueous
Date Sampled: 01/27/2011 1000
Date Received: 01/29/2011

Run	Prep Method	Analytical Method	Dilution	Analysis Date	Analyst	Prep Date	Batch
1		7470A	1	02/01/2011 1539	BNW	02/01/2011 1020	51805
1	3005A	6010C	1	02/02/2011 0127	CDF	01/31/2011 1050	51696

Parameter	CAS Number	Analytical Method	Result	Q	PQL	MDL	Units	Run
Arsenic	7440-38-2	6010C	ND		0.010	0.0040	mg/L	1
Barium	7440-39-3	6010C	0.061		0.025	0.0075	mg/L	1
Cadmium	7440-43-9	6010C	ND		0.0020	0.00060	mg/L	1
Chromium	7440-47-3	6010C	0.0046	J	0.0050	0.0021	mg/L	1
Lead	7439-92-1	6010C	ND		0.010	0.0019	mg/L	1
Mercury	7439-97-6	7470A	ND		0.00010	0.000053	mg/L	1
Selenium	7782-49-2	6010C	ND		0.010	0.0026	mg/L	1
Silver	7440-22-4	6010C	ND		0.0050	0.00040	mg/L	1

PQL = Practical quantitation limit
B = Detected in the method blank
E = Quantitation of compound exceeded the calibration range
ND = Not detected at or above the MDL
J = Estimated result < PQL and ≥ MDL
P = The RPD between two GC columns exceeds 40%
Where applicable, all soil sample analysis are reported on a dry weight basis unless flagged with a "W"
N = Recovery is out of criteria
H = Out of holding time

Volatile Organic Compounds by GC/MS

Client: ARCADIS U.S., Inc.
Laboratory ID: MA26019-034
Description: G4MW10 (012711)
Matrix: Aqueous
Date Sampled: 01/27/2011 1053
Date Received: 01/29/2011

Run	Prep Method	Analytical Method	Dilution	Analysis Date	Analyst	Prep Date	Batch
1	5030B	8260B	1	02/01/2011 1543	DLB		51987

Parameter	CAS Number	Analytical Method	Result	Q	PQL	MDL	Units	Run
Acetone	67-64-1	8260B	ND		20	6.7	ug/L	1
Benzene	71-43-2	8260B	0.17	J	1.0	0.13	ug/L	1
Bromodichloromethane	75-27-4	8260B	ND		1.0	0.33	ug/L	1
Bromoform	75-25-2	8260B	ND		1.0	0.66	ug/L	1
Bromomethane (Methyl bromide)	74-83-9	8260B	ND		2.0	0.80	ug/L	1
2-Butanone (MEK)	78-93-3	8260B	ND		10	2.0	ug/L	1
Carbon disulfide	75-15-0	8260B	ND		1.0	0.097	ug/L	1
Carbon tetrachloride	56-23-5	8260B	ND		1.0	0.14	ug/L	1
Chlorobenzene	108-90-7	8260B	ND		2.0	0.33	ug/L	1
Chloroethane	75-00-3	8260B	ND		2.0	0.47	ug/L	1
Chloroform	67-66-3	8260B	ND		1.0	0.33	ug/L	1
Chloromethane (Methyl chloride)	74-87-3	8260B	ND		1.0	0.35	ug/L	1
Dibromochloromethane	124-48-1	8260B	ND		1.0	0.33	ug/L	1
1,4-Dichlorobenzene	106-46-7	8260B	ND		1.0	0.33	ug/L	1
1,3-Dichlorobenzene	541-73-1	8260B	ND		1.0	0.33	ug/L	1
1,2-Dichlorobenzene	95-50-1	8260B	ND		1.0	0.33	ug/L	1
1,2-Dichloroethane	107-06-2	8260B	ND		1.0	0.15	ug/L	1
1,1-Dichloroethane	75-34-3	8260B	ND		1.0	0.13	ug/L	1
trans-1,2-Dichloroethene	156-60-5	8260B	1.1		1.0	0.21	ug/L	1
cis-1,2-Dichloroethene	156-59-2	8260B	1.8		1.0	0.12	ug/L	1
1,1-Dichloroethene	75-35-4	8260B	ND		1.0	0.16	ug/L	1
1,2-Dichloropropane	78-87-5	8260B	ND		1.0	0.19	ug/L	1
trans-1,3-Dichloropropene	10061-02-6	8260B	ND		1.0	0.11	ug/L	1
cis-1,3-Dichloropropene	10061-01-5	8260B	ND		1.0	0.092	ug/L	1
Ethylbenzene	100-41-4	8260B	ND		1.0	0.33	ug/L	1
2-Hexanone	591-78-6	8260B	ND		10	0.27	ug/L	1
Methyl tertiary butyl ether (MTBE)	1634-04-4	8260B	ND		1.0	0.40	ug/L	1
4-Methyl-2-pentanone	108-10-1	8260B	ND		10	0.31	ug/L	1
Methylene chloride	75-09-2	8260B	ND		1.0	0.33	ug/L	1
Styrene	100-42-5	8260B	ND		1.0	0.12	ug/L	1
1,1,2,2-Tetrachloroethane	79-34-5	8260B	ND		1.0	0.16	ug/L	1
Tetrachloroethene	127-18-4	8260B	ND		1.0	0.13	ug/L	1
Toluene	108-88-3	8260B	ND		1.0	0.33	ug/L	1
1,2,4-Trichlorobenzene	120-82-1	8260B	ND		1.0	0.51	ug/L	1
1,1,2-Trichloroethane	79-00-5	8260B	ND		1.0	0.21	ug/L	1
1,1,1-Trichloroethane	71-55-6	8260B	ND		1.0	0.074	ug/L	1
Trichloroethene	79-01-6	8260B	0.32	J	1.0	0.18	ug/L	1
Vinyl chloride	75-01-4	8260B	2.5		1.0	0.054	ug/L	1
Xylenes (total)	1330-20-7	8260B	ND		1.0	0.33	ug/L	1

PQL = Practical quantitation limit
B = Detected in the method blank
E = Quantitation of compound exceeded the calibration range
ND = Not detected at or above the MDL
J = Estimated result < PQL and ≥ MDL
P = The RPD between two GC columns exceeds 40%
Where applicable, all soil sample analysis are reported on a dry weight basis unless flagged with a "W"
N = Recovery is out of criteria
H = Out of holding time

Volatile Organic Compounds by GC/MS

Client: ARCADIS U.S., Inc.
Laboratory ID: MA26019-034
Description: G4MW10 (012711)
Matrix: Aqueous
Date Sampled: 01/27/2011 1053
Date Received: 01/29/2011

Surrogate	Q	Run 1 % Recovery	Acceptance Limits
1,2-Dichloroethane-d4		117	70-130
Bromofluorobenzene		115	70-130
Toluene-d8		108	70-130

PQL = Practical quantitation limit
B = Detected in the method blank
E = Quantitation of compound exceeded the calibration range
ND = Not detected at or above the MDL
J = Estimated result < PQL and ≥ MDL
P = The RPD between two GC columns exceeds 40%
Where applicable, all soil sample analysis are reported on a dry weight basis unless flagged with a "W"
N = Recovery is out of criteria
H = Out of holding time

Semivolatile Organic Compounds by GC/MS

Client: ARCADIS U.S., Inc.
Laboratory ID: MA26019-034
Description: G4MW10 (012711)
Matrix: Aqueous
Date Sampled: 01/27/2011 1053
Date Received: 01/29/2011

Run	Prep Method	Analytical Method	Dilution	Analysis Date	Analyst	Prep Date	Batch
1	3520C	8270D	1	02/02/2011 1913	JGH	01/31/2011 1400	51711

Parameter	CAS Number	Analytical Method	Result	Q	PQL	MDL	Units	Run
Acenaphthene	83-32-9	8270D	ND		1.0	0.091	ug/L	1
Acenaphthylene	208-96-8	8270D	ND		1.0	0.16	ug/L	1
Anthracene	120-12-7	8270D	ND		1.0	0.13	ug/L	1
Benzo(a)anthracene	56-55-3	8270D	ND		1.0	0.15	ug/L	1
Benzo(a)pyrene	50-32-8	8270D	ND		1.0	0.16	ug/L	1
Benzo(b)fluoranthene	205-99-2	8270D	ND		1.0	0.20	ug/L	1
Benzo(g,h,i)perylene	191-24-2	8270D	ND		1.0	0.23	ug/L	1
Benzo(k)fluoranthene	207-08-9	8270D	ND		1.0	0.12	ug/L	1
4-Bromophenyl phenyl ether	101-55-3	8270D	ND		1.0	0.12	ug/L	1
Butyl benzyl phthalate	85-68-7	8270D	ND		5.1	1.7	ug/L	1
Carbazole	86-74-8	8270D	ND		1.0	0.25	ug/L	1
4-Chloro-3-methyl phenol	59-50-7	8270D	ND		1.0	0.22	ug/L	1
4-Chloroaniline	106-47-8	8270D	ND		1.0	0.13	ug/L	1
bis(2-Chloroethoxy)methane	111-91-1	8270D	ND		1.0	0.13	ug/L	1
bis(2-Chloroisopropyl)ether	108-60-1	8270D	ND		1.0	0.081	ug/L	1
2-Chloronaphthalene	91-58-7	8270D	ND		1.0	0.12	ug/L	1
2-Chlorophenol	95-57-8	8270D	ND		1.0	0.13	ug/L	1
4-Chlorophenyl phenyl ether	7005-72-3	8270D	ND		1.0	0.11	ug/L	1
Chrysene	218-01-9	8270D	ND		1.0	0.12	ug/L	1
Dibenzo(a,h)anthracene	53-70-3	8270D	ND		1.0	0.13	ug/L	1
Dibenzofuran	132-64-9	8270D	ND		1.0	0.16	ug/L	1
3,3'-Dichlorobenzidine	91-94-1	8270D	ND		5.1	0.82	ug/L	1
2,4-Dichlorophenol	120-83-2	8270D	ND		1.0	0.15	ug/L	1
Diethylphthalate	84-66-2	8270D	ND		5.1	1.7	ug/L	1
Dimethyl phthalate	131-11-3	8270D	ND		5.1	1.7	ug/L	1
2,4-Dimethylphenol	105-67-9	8270D	ND		1.0	0.31	ug/L	1
Di-n-butyl phthalate	84-74-2	8270D	ND		5.1	1.7	ug/L	1
4,6-Dinitro-2-methylphenol	534-52-1	8270D	ND		5.1	1.5	ug/L	1
2,4-Dinitrophenol	51-28-5	8270D	ND		5.1	0.25	ug/L	1
2,4-Dinitrotoluene	121-14-2	8270D	ND		2.0	0.45	ug/L	1
2,6-Dinitrotoluene	606-20-2	8270D	ND		2.0	0.40	ug/L	1
Di-n-octylphthalate	117-84-0	8270D	ND		5.1	1.7	ug/L	1
bis(2-Ethylhexyl)phthalate	117-81-7	8270D	ND		5.1	1.7	ug/L	1
Fluoranthene	206-44-0	8270D	ND		1.0	0.21	ug/L	1
Fluorene	86-73-7	8270D	ND		1.0	0.10	ug/L	1
Hexachlorobenzene	118-74-1	8270D	ND		1.0	0.21	ug/L	1
Hexachlorobutadiene	87-68-3	8270D	ND		1.0	0.091	ug/L	1
Hexachlorocyclopentadiene	77-47-4	8270D	ND		5.1	0.23	ug/L	1
Hexachloroethane	67-72-1	8270D	ND		1.0	0.11	ug/L	1
Indeno(1,2,3-c,d)pyrene	193-39-5	8270D	ND		1.0	0.23	ug/L	1
Isophorone	78-59-1	8270D	ND		1.0	0.081	ug/L	1
2-Methylnaphthalene	91-57-6	8270D	ND		1.0	0.081	ug/L	1
2-Methylphenol	95-48-7	8270D	ND		1.0	0.17	ug/L	1
3 & 4-Methylphenol	106-44-5	8270D	ND		2.0	0.58	ug/L	1

PQL = Practical quantitation limit
B = Detected in the method blank
E = Quantitation of compound exceeded the calibration range
ND = Not detected at or above the MDL
J = Estimated result < PQL and ≥ MDL
P = The RPD between two GC columns exceeds 40%
Where applicable, all soil sample analysis are reported on a dry weight basis unless flagged with a "W"
N = Recovery is out of criteria
H = Out of holding time

Semivolatile Organic Compounds by GC/MS

Client: ARCADIS U.S., Inc.
Laboratory ID: MA26019-034
Description: G4MW10 (012711)
Matrix: Aqueous
Date Sampled: 01/27/2011 1053
Date Received: 01/29/2011

Run	Prep Method	Analytical Method	Dilution	Analysis Date	Analyst	Prep Date	Batch
1	3520C	8270D	1	02/02/2011 1913	JGH	01/31/2011 1400	51711

Parameter	CAS Number	Analytical Method	Result	Q	PQL	MDL	Units	Run
Naphthalene	91-20-3	8270D	ND		1.0	0.071	ug/L	1
2-Nitroaniline	88-74-4	8270D	ND		2.0	0.56	ug/L	1
3-Nitroaniline	99-09-2	8270D	ND		2.0	0.78	ug/L	1
4-Nitroaniline	100-01-6	8270D	ND		2.0	0.39	ug/L	1
Nitrobenzene	98-95-3	8270D	ND		1.0	0.10	ug/L	1
2-Nitrophenol	88-75-5	8270D	ND		2.0	0.27	ug/L	1
4-Nitrophenol	100-02-7	8270D	ND		5.1	0.65	ug/L	1
N-Nitrosodi-n-propylamine	621-64-7	8270D	ND		1.0	0.081	ug/L	1
N-Nitrosodiphenylamine (Diphenylamine)	86-30-6	8270D	ND		1.0	0.38	ug/L	1
Pentachlorophenol	87-86-5	8270D	ND		5.1	0.55	ug/L	1
Phenanthrene	85-01-8	8270D	ND		1.0	0.18	ug/L	1
Phenol	108-95-2	8270D	ND		1.0	0.11	ug/L	1
Pyrene	129-00-0	8270D	ND		1.0	0.16	ug/L	1
2,4,5-Trichlorophenol	95-95-4	8270D	ND		1.0	0.18	ug/L	1
2,4,6-Trichlorophenol	88-06-2	8270D	ND		1.0	0.22	ug/L	1

Surrogate	Q	Run 1 % Recovery	Acceptance Limits
2-Fluorobiphenyl		50	37-129
2-Fluorophenol		68	24-127
Nitrobenzene-d5		59	38-127
Phenol-d5		59	28-128
Terphenyl-d14		45	10-148
2,4,6-Tribromophenol		79	41-144

PQL = Practical quantitation limit
B = Detected in the method blank
E = Quantitation of compound exceeded the calibration range
ND = Not detected at or above the MDL
J = Estimated result < PQL and ≥ MDL
P = The RPD between two GC columns exceeds 40%
Where applicable, all soil sample analysis are reported on a dry weight basis unless flagged with a "W"
N = Recovery is out of criteria
H = Out of holding time

Dissolved RCRA Metals

Client: ARCADIS U.S., Inc.
Laboratory ID: MA26019-034
Description: G4MW10 (012711)
Matrix: Aqueous
Date Sampled: 01/27/2011 1053
Date Received: 01/29/2011

Run	Prep Method	Analytical Method	Dilution	Analysis Date	Analyst	Prep Date	Batch
1		7470A	1	02/01/2011 1546	BNW	02/01/2011 1020	51805
1	3005A	6010C	1	02/02/2011 0138	CDF	01/31/2011 1050	51696

Parameter	CAS Number	Analytical Method	Result	Q	PQL	MDL	Units	Run
Dissolved Arsenic	7440-38-2	6010C	ND		0.010	0.0040	mg/L	1
Dissolved Barium	7440-39-3	6010C	0.019	J	0.025	0.0075	mg/L	1
Dissolved Cadmium	7440-43-9	6010C	ND		0.0020	0.00060	mg/L	1
Dissolved Chromium	7440-47-3	6010C	ND		0.0050	0.0021	mg/L	1
Dissolved Lead	7439-92-1	6010C	ND		0.010	0.0019	mg/L	1
Dissolved Mercury	7439-97-6	7470A	ND		0.00010	0.000053	mg/L	1
Dissolved Selenium	7782-49-2	6010C	ND		0.010	0.0026	mg/L	1
Dissolved Silver	7440-22-4	6010C	ND		0.0050	0.00040	mg/L	1

PQL = Practical quantitation limit
B = Detected in the method blank
E = Quantitation of compound exceeded the calibration range
ND = Not detected at or above the MDL
J = Estimated result < PQL and ≥ MDL
P = The RPD between two GC columns exceeds 40%
Where applicable, all soil sample analysis are reported on a dry weight basis unless flagged with a "W"
N = Recovery is out of criteria
H = Out of holding time

RCRA Metals

Client: ARCADIS U.S., Inc.
Laboratory ID: MA26019-034
Description: G4MW10 (012711)
Matrix: Aqueous
Date Sampled: 01/27/2011 1053
Date Received: 01/29/2011

Run	Prep Method	Analytical Method	Dilution	Analysis Date	Analyst	Prep Date	Batch
1		7470A	1	02/01/2011 1544	BNW	02/01/2011 1020	51805
1	3005A	6010C	1	02/02/2011 0134	CDF	01/31/2011 1050	51696

Parameter	CAS Number	Analytical Method	Result	Q	PQL	MDL	Units	Run
Arsenic	7440-38-2	6010C	0.0052	J	0.010	0.0040	mg/L	1
Barium	7440-39-3	6010C	0.018	J	0.025	0.0075	mg/L	1
Cadmium	7440-43-9	6010C	ND		0.0020	0.00060	mg/L	1
Chromium	7440-47-3	6010C	0.0025	J	0.0050	0.0021	mg/L	1
Lead	7439-92-1	6010C	ND		0.010	0.0019	mg/L	1
Mercury	7439-97-6	7470A	ND		0.00010	0.000053	mg/L	1
Selenium	7782-49-2	6010C	ND		0.010	0.0026	mg/L	1
Silver	7440-22-4	6010C	ND		0.0050	0.00040	mg/L	1

PQL = Practical quantitation limit
B = Detected in the method blank
E = Quantitation of compound exceeded the calibration range
ND = Not detected at or above the MDL
J = Estimated result < PQL and ≥ MDL
P = The RPD between two GC columns exceeds 40%
Where applicable, all soil sample analysis are reported on a dry weight basis unless flagged with a "W"
N = Recovery is out of criteria
H = Out of holding time

Volatile Organic Compounds by GC/MS

Client: ARCADIS U.S., Inc.
Laboratory ID: MA26019-035
Description: G4MW24 (012711)
Matrix: Aqueous
Date Sampled: 01/27/2011 1110
Date Received: 01/29/2011

Run	Prep Method	Analytical Method	Dilution	Analysis Date	Analyst	Prep Date	Batch
1	5030B	8260B	1	02/01/2011 1604	DLB		51987

Parameter	CAS Number	Analytical Method	Result	Q	PQL	MDL	Units	Run
Acetone	67-64-1	8260B	ND		20	6.7	ug/L	1
Benzene	71-43-2	8260B	ND		1.0	0.13	ug/L	1
Bromodichloromethane	75-27-4	8260B	ND		1.0	0.33	ug/L	1
Bromoform	75-25-2	8260B	ND		1.0	0.66	ug/L	1
Bromomethane (Methyl bromide)	74-83-9	8260B	ND		2.0	0.80	ug/L	1
2-Butanone (MEK)	78-93-3	8260B	ND		10	2.0	ug/L	1
Carbon disulfide	75-15-0	8260B	ND		1.0	0.097	ug/L	1
Carbon tetrachloride	56-23-5	8260B	ND		1.0	0.14	ug/L	1
Chlorobenzene	108-90-7	8260B	ND		2.0	0.33	ug/L	1
Chloroethane	75-00-3	8260B	ND		2.0	0.47	ug/L	1
Chloroform	67-66-3	8260B	ND		1.0	0.33	ug/L	1
Chloromethane (Methyl chloride)	74-87-3	8260B	ND		1.0	0.35	ug/L	1
Dibromochloromethane	124-48-1	8260B	ND		1.0	0.33	ug/L	1
1,4-Dichlorobenzene	106-46-7	8260B	ND		1.0	0.33	ug/L	1
1,3-Dichlorobenzene	541-73-1	8260B	ND		1.0	0.33	ug/L	1
1,2-Dichlorobenzene	95-50-1	8260B	ND		1.0	0.33	ug/L	1
1,2-Dichloroethane	107-06-2	8260B	ND		1.0	0.15	ug/L	1
1,1-Dichloroethane	75-34-3	8260B	ND		1.0	0.13	ug/L	1
trans-1,2-Dichloroethene	156-60-5	8260B	3.3		1.0	0.21	ug/L	1
cis-1,2-Dichloroethene	156-59-2	8260B	11		1.0	0.12	ug/L	1
1,1-Dichloroethene	75-35-4	8260B	ND		1.0	0.16	ug/L	1
1,2-Dichloropropane	78-87-5	8260B	ND		1.0	0.19	ug/L	1
trans-1,3-Dichloropropene	10061-02-6	8260B	ND		1.0	0.11	ug/L	1
cis-1,3-Dichloropropene	10061-01-5	8260B	ND		1.0	0.092	ug/L	1
Ethylbenzene	100-41-4	8260B	ND		1.0	0.33	ug/L	1
2-Hexanone	591-78-6	8260B	ND		10	0.27	ug/L	1
Methyl tertiary butyl ether (MTBE)	1634-04-4	8260B	ND		1.0	0.40	ug/L	1
4-Methyl-2-pentanone	108-10-1	8260B	ND		10	0.31	ug/L	1
Methylene chloride	75-09-2	8260B	ND		1.0	0.33	ug/L	1
Styrene	100-42-5	8260B	ND		1.0	0.12	ug/L	1
1,1,2,2-Tetrachloroethane	79-34-5	8260B	ND		1.0	0.16	ug/L	1
Tetrachloroethene	127-18-4	8260B	ND		1.0	0.13	ug/L	1
Toluene	108-88-3	8260B	ND		1.0	0.33	ug/L	1
1,2,4-Trichlorobenzene	120-82-1	8260B	ND		1.0	0.51	ug/L	1
1,1,2-Trichloroethane	79-00-5	8260B	ND		1.0	0.21	ug/L	1
1,1,1-Trichloroethane	71-55-6	8260B	ND		1.0	0.074	ug/L	1
Trichloroethene	79-01-6	8260B	2.8		1.0	0.18	ug/L	1
Vinyl chloride	75-01-4	8260B	ND		1.0	0.054	ug/L	1
Xylenes (total)	1330-20-7	8260B	ND		1.0	0.33	ug/L	1

PQL = Practical quantitation limit
B = Detected in the method blank
E = Quantitation of compound exceeded the calibration range
ND = Not detected at or above the MDL
J = Estimated result < PQL and ≥ MDL
P = The RPD between two GC columns exceeds 40%
Where applicable, all soil sample analysis are reported on a dry weight basis unless flagged with a "W"
N = Recovery is out of criteria
H = Out of holding time

Volatile Organic Compounds by GC/MS

Client: ARCADIS U.S., Inc.
Laboratory ID: MA26019-035
Description: G4MW24 (012711)
Matrix: Aqueous
Date Sampled: 01/27/2011 1110
Date Received: 01/29/2011

Surrogate	Q	Run 1 % Recovery	Acceptance Limits
1,2-Dichloroethane-d4		117	70-130
Bromofluorobenzene		114	70-130
Toluene-d8		109	70-130

PQL = Practical quantitation limit
B = Detected in the method blank
E = Quantitation of compound exceeded the calibration range
ND = Not detected at or above the MDL
J = Estimated result < PQL and ≥ MDL
P = The RPD between two GC columns exceeds 40%
Where applicable, all soil sample analysis are reported on a dry weight basis unless flagged with a "W"
N = Recovery is out of criteria
H = Out of holding time

Semivolatile Organic Compounds by GC/MS

Client: ARCADIS U.S., Inc.
Laboratory ID: MA26019-035
Description: G4MW24 (012711)
Matrix: Aqueous
Date Sampled: 01/27/2011 1110
Date Received: 01/29/2011

Run	Prep Method	Analytical Method	Dilution	Analysis Date	Analyst	Prep Date	Batch
1	3520C	8270D	1	02/02/2011 1357	JGH	01/31/2011 1400	51711

Parameter	CAS Number	Analytical Method	Result	Q	PQL	MDL	Units	Run
Acenaphthene	83-32-9	8270D	ND		1.0	0.092	ug/L	1
Acenaphthylene	208-96-8	8270D	ND		1.0	0.16	ug/L	1
Anthracene	120-12-7	8270D	ND		1.0	0.13	ug/L	1
Benzo(a)anthracene	56-55-3	8270D	ND		1.0	0.15	ug/L	1
Benzo(a)pyrene	50-32-8	8270D	ND		1.0	0.16	ug/L	1
Benzo(b)fluoranthene	205-99-2	8270D	ND		1.0	0.20	ug/L	1
Benzo(g,h,i)perylene	191-24-2	8270D	ND		1.0	0.23	ug/L	1
Benzo(k)fluoranthene	207-08-9	8270D	ND		1.0	0.12	ug/L	1
4-Bromophenyl phenyl ether	101-55-3	8270D	ND		1.0	0.12	ug/L	1
Butyl benzyl phthalate	85-68-7	8270D	ND		5.1	1.7	ug/L	1
Carbazole	86-74-8	8270D	ND		1.0	0.26	ug/L	1
4-Chloro-3-methyl phenol	59-50-7	8270D	ND		1.0	0.22	ug/L	1
4-Chloroaniline	106-47-8	8270D	ND		1.0	0.13	ug/L	1
bis(2-Chloroethoxy)methane	111-91-1	8270D	ND		1.0	0.13	ug/L	1
bis(2-Chloroisopropyl)ether	108-60-1	8270D	ND		1.0	0.082	ug/L	1
2-Chloronaphthalene	91-58-7	8270D	ND		1.0	0.12	ug/L	1
2-Chlorophenol	95-57-8	8270D	ND		1.0	0.13	ug/L	1
4-Chlorophenyl phenyl ether	7005-72-3	8270D	ND		1.0	0.11	ug/L	1
Chrysene	218-01-9	8270D	ND		1.0	0.12	ug/L	1
Dibenzo(a,h)anthracene	53-70-3	8270D	ND		1.0	0.13	ug/L	1
Dibenzofuran	132-64-9	8270D	ND		1.0	0.16	ug/L	1
3,3'-Dichlorobenzidine	91-94-1	8270D	ND		5.1	0.83	ug/L	1
2,4-Dichlorophenol	120-83-2	8270D	ND		1.0	0.15	ug/L	1
Diethylphthalate	84-66-2	8270D	ND		5.1	1.7	ug/L	1
Dimethyl phthalate	131-11-3	8270D	ND		5.1	1.7	ug/L	1
2,4-Dimethylphenol	105-67-9	8270D	ND		1.0	0.32	ug/L	1
Di-n-butyl phthalate	84-74-2	8270D	ND		5.1	1.7	ug/L	1
4,6-Dinitro-2-methylphenol	534-52-1	8270D	ND		5.1	1.5	ug/L	1
2,4-Dinitrophenol	51-28-5	8270D	ND		5.1	0.26	ug/L	1
2,4-Dinitrotoluene	121-14-2	8270D	ND		2.0	0.46	ug/L	1
2,6-Dinitrotoluene	606-20-2	8270D	ND		2.0	0.41	ug/L	1
Di-n-octylphthalate	117-84-0	8270D	ND		5.1	1.7	ug/L	1
bis(2-Ethylhexyl)phthalate	117-81-7	8270D	ND		5.1	1.7	ug/L	1
Fluoranthene	206-44-0	8270D	ND		1.0	0.21	ug/L	1
Fluorene	86-73-7	8270D	ND		1.0	0.10	ug/L	1
Hexachlorobenzene	118-74-1	8270D	ND		1.0	0.21	ug/L	1
Hexachlorobutadiene	87-68-3	8270D	ND		1.0	0.092	ug/L	1
Hexachlorocyclopentadiene	77-47-4	8270D	ND		5.1	0.23	ug/L	1
Hexachloroethane	67-72-1	8270D	ND		1.0	0.11	ug/L	1
Indeno(1,2,3-c,d)pyrene	193-39-5	8270D	ND		1.0	0.23	ug/L	1
Isophorone	78-59-1	8270D	ND		1.0	0.082	ug/L	1
2-Methylnaphthalene	91-57-6	8270D	ND		1.0	0.082	ug/L	1
2-Methylphenol	95-48-7	8270D	ND		1.0	0.17	ug/L	1
3 & 4-Methylphenol	106-44-5	8270D	ND		2.0	0.58	ug/L	1

PQL = Practical quantitation limit
B = Detected in the method blank
E = Quantitation of compound exceeded the calibration range
ND = Not detected at or above the MDL
J = Estimated result < PQL and ≥ MDL
P = The RPD between two GC columns exceeds 40%
Where applicable, all soil sample analysis are reported on a dry weight basis unless flagged with a "W"
N = Recovery is out of criteria
H = Out of holding time

Semivolatile Organic Compounds by GC/MS

Client: ARCADIS U.S., Inc.
Laboratory ID: MA26019-035
Description: G4MW24 (012711)
Matrix: Aqueous
Date Sampled: 01/27/2011 1110
Date Received: 01/29/2011

Run	Prep Method	Analytical Method	Dilution	Analysis Date	Analyst	Prep Date	Batch
1	3520C	8270D	1	02/02/2011 1357	JGH	01/31/2011 1400	51711

Parameter	CAS Number	Analytical Method	Result	Q	PQL	MDL	Units	Run
Naphthalene	91-20-3	8270D	ND		1.0	0.071	ug/L	1
2-Nitroaniline	88-74-4	8270D	ND		2.0	0.56	ug/L	1
3-Nitroaniline	99-09-2	8270D	ND		2.0	0.79	ug/L	1
4-Nitroaniline	100-01-6	8270D	ND		2.0	0.40	ug/L	1
Nitrobenzene	98-95-3	8270D	ND		1.0	0.10	ug/L	1
2-Nitrophenol	88-75-5	8270D	ND		2.0	0.28	ug/L	1
4-Nitrophenol	100-02-7	8270D	ND		5.1	0.65	ug/L	1
N-Nitrosodi-n-propylamine	621-64-7	8270D	ND		1.0	0.082	ug/L	1
N-Nitrosodiphenylamine (Diphenylamine)	86-30-6	8270D	ND		1.0	0.39	ug/L	1
Pentachlorophenol	87-86-5	8270D	ND		5.1	0.55	ug/L	1
Phenanthrene	85-01-8	8270D	ND		1.0	0.18	ug/L	1
Phenol	108-95-2	8270D	ND		1.0	0.11	ug/L	1
Pyrene	129-00-0	8270D	ND		1.0	0.16	ug/L	1
2,4,5-Trichlorophenol	95-95-4	8270D	ND		1.0	0.18	ug/L	1
2,4,6-Trichlorophenol	88-06-2	8270D	ND		1.0	0.22	ug/L	1

Surrogate	Q	Run 1 % Recovery	Acceptance Limits
2-Fluorobiphenyl		58	37-129
2-Fluorophenol		43	24-127
Nitrobenzene-d5		66	38-127
Phenol-d5		53	28-128
Terphenyl-d14		43	10-148
2,4,6-Tribromophenol		77	41-144

PQL = Practical quantitation limit
B = Detected in the method blank
E = Quantitation of compound exceeded the calibration range
ND = Not detected at or above the MDL
J = Estimated result < PQL and ≥ MDL
P = The RPD between two GC columns exceeds 40%
Where applicable, all soil sample analysis are reported on a dry weight basis unless flagged with a "W"
N = Recovery is out of criteria
H = Out of holding time

Dissolved RCRA Metals

Client: ARCADIS U.S., Inc.
Laboratory ID: MA26019-035
Description: G4MW24 (012711)
Matrix: Aqueous
Date Sampled: 01/27/2011 1110
Date Received: 01/29/2011

Run	Prep Method	Analytical Method	Dilution	Analysis Date	Analyst	Prep Date	Batch
1		7470A	1	02/01/2011 1600	BNW	02/01/2011 1020	51806
1	3005A	6010C	1	02/02/2011 0145	CDF	01/31/2011 1050	51696

Parameter	CAS Number	Analytical Method	Result	Q	PQL	MDL	Units	Run
Dissolved Arsenic	7440-38-2	6010C	0.0056	J	0.010	0.0040	mg/L	1
Dissolved Barium	7440-39-3	6010C	0.046		0.025	0.0075	mg/L	1
Dissolved Cadmium	7440-43-9	6010C	ND		0.0020	0.00060	mg/L	1
Dissolved Chromium	7440-47-3	6010C	ND		0.0050	0.0021	mg/L	1
Dissolved Lead	7439-92-1	6010C	ND		0.010	0.0019	mg/L	1
Dissolved Mercury	7439-97-6	7470A	ND		0.00010	0.000053	mg/L	1
Dissolved Selenium	7782-49-2	6010C	ND		0.010	0.0026	mg/L	1
Dissolved Silver	7440-22-4	6010C	ND		0.0050	0.00040	mg/L	1

PQL = Practical quantitation limit
B = Detected in the method blank
E = Quantitation of compound exceeded the calibration range
ND = Not detected at or above the MDL
J = Estimated result < PQL and ≥ MDL
P = The RPD between two GC columns exceeds 40%
Where applicable, all soil sample analysis are reported on a dry weight basis unless flagged with a "W"
N = Recovery is out of criteria
H = Out of holding time

RCRA Metals

Client: ARCADIS U.S., Inc.
Laboratory ID: MA26019-035
Description: G4MW24 (012711)
Matrix: Aqueous
Date Sampled: 01/27/2011 1110
Date Received: 01/29/2011

Run	Prep Method	Analytical Method	Dilution	Analysis Date	Analyst	Prep Date	Batch
1		7470A	1	02/01/2011 1549	BNW	02/01/2011 1020	51805
1	3005A	6010C	1	02/02/2011 0142	CDF	01/31/2011 1050	51696

Parameter	CAS Number	Analytical Method	Result	Q	PQL	MDL	Units	Run
Arsenic	7440-38-2	6010C	ND		0.010	0.0040	mg/L	1
Barium	7440-39-3	6010C	0.045		0.025	0.0075	mg/L	1
Cadmium	7440-43-9	6010C	ND		0.0020	0.00060	mg/L	1
Chromium	7440-47-3	6010C	0.0022	J	0.0050	0.0021	mg/L	1
Lead	7439-92-1	6010C	ND		0.010	0.0019	mg/L	1
Mercury	7439-97-6	7470A	ND		0.00010	0.000053	mg/L	1
Selenium	7782-49-2	6010C	ND		0.010	0.0026	mg/L	1
Silver	7440-22-4	6010C	ND		0.0050	0.00040	mg/L	1

PQL = Practical quantitation limit
B = Detected in the method blank
E = Quantitation of compound exceeded the calibration range
ND = Not detected at or above the MDL
J = Estimated result < PQL and ≥ MDL
P = The RPD between two GC columns exceeds 40%
Where applicable, all soil sample analysis are reported on a dry weight basis unless flagged with a "W"
N = Recovery is out of criteria
H = Out of holding time

Volatile Organic Compounds by GC/MS

Client: ARCADIS U.S., Inc.
Laboratory ID: MA26019-036
Description: G4MW13 (012711)
Matrix: Aqueous
Date Sampled: 01/27/2011 1245
Date Received: 01/29/2011

Run	Prep Method	Analytical Method	Dilution	Analysis Date	Analyst	Prep Date	Batch
1	5030B	8260B	1	02/01/2011 1626	DLB		51987

Parameter	CAS Number	Analytical Method	Result	Q	PQL	MDL	Units	Run
Acetone	67-64-1	8260B	ND		20	6.7	ug/L	1
Benzene	71-43-2	8260B	ND		1.0	0.13	ug/L	1
Bromodichloromethane	75-27-4	8260B	ND		1.0	0.33	ug/L	1
Bromoform	75-25-2	8260B	ND		1.0	0.66	ug/L	1
Bromomethane (Methyl bromide)	74-83-9	8260B	ND		2.0	0.80	ug/L	1
2-Butanone (MEK)	78-93-3	8260B	ND		10	2.0	ug/L	1
Carbon disulfide	75-15-0	8260B	ND		1.0	0.097	ug/L	1
Carbon tetrachloride	56-23-5	8260B	ND		1.0	0.14	ug/L	1
Chlorobenzene	108-90-7	8260B	ND		2.0	0.33	ug/L	1
Chloroethane	75-00-3	8260B	ND		2.0	0.47	ug/L	1
Chloroform	67-66-3	8260B	ND		1.0	0.33	ug/L	1
Chloromethane (Methyl chloride)	74-87-3	8260B	ND		1.0	0.35	ug/L	1
Dibromochloromethane	124-48-1	8260B	ND		1.0	0.33	ug/L	1
1,4-Dichlorobenzene	106-46-7	8260B	ND		1.0	0.33	ug/L	1
1,3-Dichlorobenzene	541-73-1	8260B	ND		1.0	0.33	ug/L	1
1,2-Dichlorobenzene	95-50-1	8260B	ND		1.0	0.33	ug/L	1
1,2-Dichloroethane	107-06-2	8260B	ND		1.0	0.15	ug/L	1
1,1-Dichloroethane	75-34-3	8260B	ND		1.0	0.13	ug/L	1
trans-1,2-Dichloroethene	156-60-5	8260B	1.3		1.0	0.21	ug/L	1
cis-1,2-Dichloroethene	156-59-2	8260B	6.4		1.0	0.12	ug/L	1
1,1-Dichloroethene	75-35-4	8260B	ND		1.0	0.16	ug/L	1
1,2-Dichloropropane	78-87-5	8260B	ND		1.0	0.19	ug/L	1
trans-1,3-Dichloropropene	10061-02-6	8260B	ND		1.0	0.11	ug/L	1
cis-1,3-Dichloropropene	10061-01-5	8260B	ND		1.0	0.092	ug/L	1
Ethylbenzene	100-41-4	8260B	ND		1.0	0.33	ug/L	1
2-Hexanone	591-78-6	8260B	ND		10	0.27	ug/L	1
Methyl tertiary butyl ether (MTBE)	1634-04-4	8260B	ND		1.0	0.40	ug/L	1
4-Methyl-2-pentanone	108-10-1	8260B	ND		10	0.31	ug/L	1
Methylene chloride	75-09-2	8260B	ND		1.0	0.33	ug/L	1
Styrene	100-42-5	8260B	ND		1.0	0.12	ug/L	1
1,1,2,2-Tetrachloroethane	79-34-5	8260B	ND		1.0	0.16	ug/L	1
Tetrachloroethene	127-18-4	8260B	ND		1.0	0.13	ug/L	1
Toluene	108-88-3	8260B	ND		1.0	0.33	ug/L	1
1,2,4-Trichlorobenzene	120-82-1	8260B	ND		1.0	0.51	ug/L	1
1,1,2-Trichloroethane	79-00-5	8260B	ND		1.0	0.21	ug/L	1
1,1,1-Trichloroethane	71-55-6	8260B	ND		1.0	0.074	ug/L	1
Trichloroethene	79-01-6	8260B	3.3		1.0	0.18	ug/L	1
Vinyl chloride	75-01-4	8260B	ND		1.0	0.054	ug/L	1
Xylenes (total)	1330-20-7	8260B	ND		1.0	0.33	ug/L	1

PQL = Practical quantitation limit
B = Detected in the method blank
E = Quantitation of compound exceeded the calibration range
ND = Not detected at or above the MDL
J = Estimated result < PQL and ≥ MDL
P = The RPD between two GC columns exceeds 40%
Where applicable, all soil sample analysis are reported on a dry weight basis unless flagged with a "W"
N = Recovery is out of criteria
H = Out of holding time

Volatile Organic Compounds by GC/MS

Client: ARCADIS U.S., Inc.
Laboratory ID: MA26019-036
Description: G4MW13 (012711)
Matrix: Aqueous
Date Sampled: 01/27/2011 1245
Date Received: 01/29/2011

Surrogate	Q	Run 1 % Recovery	Acceptance Limits
1,2-Dichloroethane-d4		115	70-130
Bromofluorobenzene		112	70-130
Toluene-d8		107	70-130

PQL = Practical quantitation limit
B = Detected in the method blank
E = Quantitation of compound exceeded the calibration range
ND = Not detected at or above the MDL
J = Estimated result < PQL and ≥ MDL
P = The RPD between two GC columns exceeds 40%
Where applicable, all soil sample analysis are reported on a dry weight basis unless flagged with a "W"
N = Recovery is out of criteria
H = Out of holding time

Semivolatile Organic Compounds by GC/MS

Client: ARCADIS U.S., Inc.
Laboratory ID: MA26019-036
Description: G4MW13 (012711)
Matrix: Aqueous
Date Sampled: 01/27/2011 1245
Date Received: 01/29/2011

Run	Prep Method	Analytical Method	Dilution	Analysis Date	Analyst	Prep Date	Batch
1	3520C	8270D	1	02/02/2011 1938	WD	01/31/2011 1400	51712

Parameter	CAS Number	Analytical Method	Result	Q	PQL	MDL	Units	Run
Acenaphthene	83-32-9	8270D	ND		1.0	0.091	ug/L	1
Acenaphthylene	208-96-8	8270D	ND		1.0	0.16	ug/L	1
Anthracene	120-12-7	8270D	ND		1.0	0.13	ug/L	1
Benzo(a)anthracene	56-55-3	8270D	ND		1.0	0.15	ug/L	1
Benzo(a)pyrene	50-32-8	8270D	ND		1.0	0.16	ug/L	1
Benzo(b)fluoranthene	205-99-2	8270D	ND		1.0	0.20	ug/L	1
Benzo(g,h,i)perylene	191-24-2	8270D	ND		1.0	0.23	ug/L	1
Benzo(k)fluoranthene	207-08-9	8270D	ND		1.0	0.12	ug/L	1
4-Bromophenyl phenyl ether	101-55-3	8270D	ND		1.0	0.12	ug/L	1
Butyl benzyl phthalate	85-68-7	8270D	ND		5.1	1.7	ug/L	1
Carbazole	86-74-8	8270D	ND		1.0	0.25	ug/L	1
4-Chloro-3-methyl phenol	59-50-7	8270D	ND		1.0	0.22	ug/L	1
4-Chloroaniline	106-47-8	8270D	ND		1.0	0.13	ug/L	1
bis(2-Chloroethoxy)methane	111-91-1	8270D	ND		1.0	0.13	ug/L	1
bis(2-Chloroisopropyl)ether	108-60-1	8270D	ND		1.0	0.081	ug/L	1
2-Chloronaphthalene	91-58-7	8270D	ND		1.0	0.12	ug/L	1
2-Chlorophenol	95-57-8	8270D	ND		1.0	0.13	ug/L	1
4-Chlorophenyl phenyl ether	7005-72-3	8270D	ND		1.0	0.11	ug/L	1
Chrysene	218-01-9	8270D	ND		1.0	0.12	ug/L	1
Dibenzo(a,h)anthracene	53-70-3	8270D	ND		1.0	0.13	ug/L	1
Dibenzofuran	132-64-9	8270D	ND		1.0	0.16	ug/L	1
3,3'-Dichlorobenzidine	91-94-1	8270D	ND		5.1	0.82	ug/L	1
2,4-Dichlorophenol	120-83-2	8270D	ND		1.0	0.15	ug/L	1
Diethylphthalate	84-66-2	8270D	ND		5.1	1.7	ug/L	1
Dimethyl phthalate	131-11-3	8270D	ND		5.1	1.7	ug/L	1
2,4-Dimethylphenol	105-67-9	8270D	ND		1.0	0.31	ug/L	1
Di-n-butyl phthalate	84-74-2	8270D	ND		5.1	1.7	ug/L	1
4,6-Dinitro-2-methylphenol	534-52-1	8270D	ND		5.1	1.5	ug/L	1
2,4-Dinitrophenol	51-28-5	8270D	ND		5.1	0.25	ug/L	1
2,4-Dinitrotoluene	121-14-2	8270D	ND		2.0	0.45	ug/L	1
2,6-Dinitrotoluene	606-20-2	8270D	ND		2.0	0.40	ug/L	1
Di-n-octylphthalate	117-84-0	8270D	ND		5.1	1.7	ug/L	1
bis(2-Ethylhexyl)phthalate	117-81-7	8270D	ND		5.1	1.7	ug/L	1
Fluoranthene	206-44-0	8270D	ND		1.0	0.21	ug/L	1
Fluorene	86-73-7	8270D	ND		1.0	0.10	ug/L	1
Hexachlorobenzene	118-74-1	8270D	ND		1.0	0.21	ug/L	1
Hexachlorobutadiene	87-68-3	8270D	ND		1.0	0.091	ug/L	1
Hexachlorocyclopentadiene	77-47-4	8270D	ND		5.1	0.23	ug/L	1
Hexachloroethane	67-72-1	8270D	ND		1.0	0.11	ug/L	1
Indeno(1,2,3-c,d)pyrene	193-39-5	8270D	ND		1.0	0.23	ug/L	1
Isophorone	78-59-1	8270D	ND		1.0	0.081	ug/L	1
2-Methylnaphthalene	91-57-6	8270D	ND		1.0	0.081	ug/L	1
2-Methylphenol	95-48-7	8270D	ND		1.0	0.17	ug/L	1
3 & 4-Methylphenol	106-44-5	8270D	ND		2.0	0.58	ug/L	1

PQL = Practical quantitation limit
B = Detected in the method blank
E = Quantitation of compound exceeded the calibration range
ND = Not detected at or above the MDL
J = Estimated result < PQL and ≥ MDL
P = The RPD between two GC columns exceeds 40%
Where applicable, all soil sample analysis are reported on a dry weight basis unless flagged with a "W"
N = Recovery is out of criteria
H = Out of holding time

Semivolatile Organic Compounds by GC/MS

Client: ARCADIS U.S., Inc.
Laboratory ID: MA26019-036
Description: G4MW13 (012711)
Matrix: Aqueous
Date Sampled: 01/27/2011 1245
Date Received: 01/29/2011

Run	Prep Method	Analytical Method	Dilution	Analysis Date	Analyst	Prep Date	Batch
1	3520C	8270D	1	02/02/2011 1938	WD	01/31/2011 1400	51712

Parameter	CAS Number	Analytical Method	Result	Q	PQL	MDL	Units	Run
Naphthalene	91-20-3	8270D	ND		1.0	0.071	ug/L	1
2-Nitroaniline	88-74-4	8270D	ND		2.0	0.56	ug/L	1
3-Nitroaniline	99-09-2	8270D	ND		2.0	0.78	ug/L	1
4-Nitroaniline	100-01-6	8270D	ND		2.0	0.39	ug/L	1
Nitrobenzene	98-95-3	8270D	ND		1.0	0.10	ug/L	1
2-Nitrophenol	88-75-5	8270D	ND		2.0	0.27	ug/L	1
4-Nitrophenol	100-02-7	8270D	ND		5.1	0.65	ug/L	1
N-Nitrosodi-n-propylamine	621-64-7	8270D	ND		1.0	0.081	ug/L	1
N-Nitrosodiphenylamine (Diphenylamine)	86-30-6	8270D	ND		1.0	0.38	ug/L	1
Pentachlorophenol	87-86-5	8270D	ND		5.1	0.55	ug/L	1
Phenanthrene	85-01-8	8270D	ND		1.0	0.18	ug/L	1
Phenol	108-95-2	8270D	ND		1.0	0.11	ug/L	1
Pyrene	129-00-0	8270D	ND		1.0	0.16	ug/L	1
2,4,5-Trichlorophenol	95-95-4	8270D	ND		1.0	0.18	ug/L	1
2,4,6-Trichlorophenol	88-06-2	8270D	ND		1.0	0.22	ug/L	1

Surrogate	Q	Run 1 % Recovery	Acceptance Limits
2-Fluorobiphenyl		61	37-129
2-Fluorophenol		54	24-127
Nitrobenzene-d5		59	38-127
Phenol-d5		58	28-128
Terphenyl-d14		47	10-148
2,4,6-Tribromophenol		66	41-144

PQL = Practical quantitation limit
B = Detected in the method blank
E = Quantitation of compound exceeded the calibration range
ND = Not detected at or above the MDL
J = Estimated result < PQL and ≥ MDL
P = The RPD between two GC columns exceeds 40%
Where applicable, all soil sample analysis are reported on a dry weight basis unless flagged with a "W"
N = Recovery is out of criteria
H = Out of holding time

Dissolved RCRA Metals

Client: ARCADIS U.S., Inc.
Laboratory ID: MA26019-036
Description: G4MW13 (012711)
Matrix: Aqueous
Date Sampled: 01/27/2011 1245
Date Received: 01/29/2011

Run	Prep Method	Analytical Method	Dilution	Analysis Date	Analyst	Prep Date	Batch
1		7470A	1	02/01/2011 1616	BNW	02/01/2011 1020	51806
1	3005A	6010C	1	02/02/2011 0153	CDF	01/31/2011 1050	51696

Parameter	CAS Number	Analytical Method	Result	Q	PQL	MDL	Units	Run
Dissolved Arsenic	7440-38-2	6010C	0.0060	J	0.010	0.0040	mg/L	1
Dissolved Barium	7440-39-3	6010C	0.023	J	0.025	0.0075	mg/L	1
Dissolved Cadmium	7440-43-9	6010C	0.00068	J	0.0020	0.00060	mg/L	1
Dissolved Chromium	7440-47-3	6010C	ND		0.0050	0.0021	mg/L	1
Dissolved Lead	7439-92-1	6010C	ND		0.010	0.0019	mg/L	1
Dissolved Mercury	7439-97-6	7470A	ND		0.00010	0.000053	mg/L	1
Dissolved Selenium	7782-49-2	6010C	ND		0.010	0.0026	mg/L	1
Dissolved Silver	7440-22-4	6010C	ND		0.0050	0.00040	mg/L	1

PQL = Practical quantitation limit
B = Detected in the method blank
E = Quantitation of compound exceeded the calibration range
ND = Not detected at or above the MDL
J = Estimated result < PQL and ≥ MDL
P = The RPD between two GC columns exceeds 40%
Where applicable, all soil sample analysis are reported on a dry weight basis unless flagged with a "W"
N = Recovery is out of criteria
H = Out of holding time

RCRA Metals

Client: ARCADIS U.S., Inc.
Laboratory ID: MA26019-036
Description: G4MW13 (012711)
Matrix: Aqueous
Date Sampled: 01/27/2011 1245
Date Received: 01/29/2011

Run	Prep Method	Analytical Method	Dilution	Analysis Date	Analyst	Prep Date	Batch
1		7470A	1	02/01/2011 1614	BNW	02/01/2011 1020	51806
1	3005A	6010C	1	02/02/2011 0149	CDF	01/31/2011 1050	51696

Parameter	CAS Number	Analytical Method	Result	Q	PQL	MDL	Units	Run
Arsenic	7440-38-2	6010C	ND		0.010	0.0040	mg/L	1
Barium	7440-39-3	6010C	0.023	J	0.025	0.0075	mg/L	1
Cadmium	7440-43-9	6010C	ND		0.0020	0.00060	mg/L	1
Chromium	7440-47-3	6010C	ND		0.0050	0.0021	mg/L	1
Lead	7439-92-1	6010C	ND		0.010	0.0019	mg/L	1
Mercury	7439-97-6	7470A	ND		0.00010	0.000053	mg/L	1
Selenium	7782-49-2	6010C	ND		0.010	0.0026	mg/L	1
Silver	7440-22-4	6010C	ND		0.0050	0.00040	mg/L	1

PQL = Practical quantitation limit
B = Detected in the method blank
E = Quantitation of compound exceeded the calibration range
ND = Not detected at or above the MDL
J = Estimated result < PQL and ≥ MDL
P = The RPD between two GC columns exceeds 40%
Where applicable, all soil sample analysis are reported on a dry weight basis unless flagged with a "W"
N = Recovery is out of criteria
H = Out of holding time

Volatile Organic Compounds by GC/MS

Client: ARCADIS U.S., Inc.
Laboratory ID: MA26019-037
Description: G4MW29 (012711)
Matrix: Aqueous
Date Sampled: 01/27/2011 1535
Date Received: 01/29/2011

Run	Prep Method	Analytical Method	Dilution	Analysis Date	Analyst	Prep Date	Batch
1	5030B	8260B	1	02/01/2011 1647	DLB		51987

Parameter	CAS Number	Analytical Method	Result	Q	PQL	MDL	Units	Run
Acetone	67-64-1	8260B	ND		20	6.7	ug/L	1
Benzene	71-43-2	8260B	ND		1.0	0.13	ug/L	1
Bromodichloromethane	75-27-4	8260B	ND		1.0	0.33	ug/L	1
Bromoform	75-25-2	8260B	ND		1.0	0.66	ug/L	1
Bromomethane (Methyl bromide)	74-83-9	8260B	ND		2.0	0.80	ug/L	1
2-Butanone (MEK)	78-93-3	8260B	ND		10	2.0	ug/L	1
Carbon disulfide	75-15-0	8260B	ND		1.0	0.097	ug/L	1
Carbon tetrachloride	56-23-5	8260B	ND		1.0	0.14	ug/L	1
Chlorobenzene	108-90-7	8260B	ND		2.0	0.33	ug/L	1
Chloroethane	75-00-3	8260B	ND		2.0	0.47	ug/L	1
Chloroform	67-66-3	8260B	ND		1.0	0.33	ug/L	1
Chloromethane (Methyl chloride)	74-87-3	8260B	ND		1.0	0.35	ug/L	1
Dibromochloromethane	124-48-1	8260B	ND		1.0	0.33	ug/L	1
1,4-Dichlorobenzene	106-46-7	8260B	ND		1.0	0.33	ug/L	1
1,3-Dichlorobenzene	541-73-1	8260B	ND		1.0	0.33	ug/L	1
1,2-Dichlorobenzene	95-50-1	8260B	ND		1.0	0.33	ug/L	1
1,2-Dichloroethane	107-06-2	8260B	ND		1.0	0.15	ug/L	1
1,1-Dichloroethane	75-34-3	8260B	ND		1.0	0.13	ug/L	1
trans-1,2-Dichloroethene	156-60-5	8260B	1.1		1.0	0.21	ug/L	1
cis-1,2-Dichloroethene	156-59-2	8260B	3.7		1.0	0.12	ug/L	1
1,1-Dichloroethene	75-35-4	8260B	ND		1.0	0.16	ug/L	1
1,2-Dichloropropane	78-87-5	8260B	ND		1.0	0.19	ug/L	1
trans-1,3-Dichloropropene	10061-02-6	8260B	ND		1.0	0.11	ug/L	1
cis-1,3-Dichloropropene	10061-01-5	8260B	ND		1.0	0.092	ug/L	1
Ethylbenzene	100-41-4	8260B	ND		1.0	0.33	ug/L	1
2-Hexanone	591-78-6	8260B	ND		10	0.27	ug/L	1
Methyl tertiary butyl ether (MTBE)	1634-04-4	8260B	ND		1.0	0.40	ug/L	1
4-Methyl-2-pentanone	108-10-1	8260B	ND		10	0.31	ug/L	1
Methylene chloride	75-09-2	8260B	ND		1.0	0.33	ug/L	1
Styrene	100-42-5	8260B	ND		1.0	0.12	ug/L	1
1,1,2,2-Tetrachloroethane	79-34-5	8260B	ND		1.0	0.16	ug/L	1
Tetrachloroethene	127-18-4	8260B	ND		1.0	0.13	ug/L	1
Toluene	108-88-3	8260B	ND		1.0	0.33	ug/L	1
1,2,4-Trichlorobenzene	120-82-1	8260B	ND		1.0	0.51	ug/L	1
1,1,2-Trichloroethane	79-00-5	8260B	ND		1.0	0.21	ug/L	1
1,1,1-Trichloroethane	71-55-6	8260B	ND		1.0	0.074	ug/L	1
Trichloroethene	79-01-6	8260B	2.9		1.0	0.18	ug/L	1
Vinyl chloride	75-01-4	8260B	ND		1.0	0.054	ug/L	1
Xylenes (total)	1330-20-7	8260B	ND		1.0	0.33	ug/L	1

PQL = Practical quantitation limit
B = Detected in the method blank
E = Quantitation of compound exceeded the calibration range
ND = Not detected at or above the MDL
J = Estimated result < PQL and ≥ MDL
P = The RPD between two GC columns exceeds 40%
Where applicable, all soil sample analysis are reported on a dry weight basis unless flagged with a "W"
N = Recovery is out of criteria
H = Out of holding time

Volatile Organic Compounds by GC/MS

Client: ARCADIS U.S., Inc.
Laboratory ID: MA26019-037
Description: G4MW29 (012711)
Matrix: Aqueous
Date Sampled: 01/27/2011 1535
Date Received: 01/29/2011

Surrogate	Q	Run 1 % Recovery	Acceptance Limits
1,2-Dichloroethane-d4		118	70-130
Bromofluorobenzene		114	70-130
Toluene-d8		109	70-130

PQL = Practical quantitation limit
B = Detected in the method blank
E = Quantitation of compound exceeded the calibration range
ND = Not detected at or above the MDL
J = Estimated result < PQL and ≥ MDL
P = The RPD between two GC columns exceeds 40%
Where applicable, all soil sample analysis are reported on a dry weight basis unless flagged with a "W"
N = Recovery is out of criteria
H = Out of holding time

Semivolatile Organic Compounds by GC/MS

Client: ARCADIS U.S., Inc.
Laboratory ID: MA26019-037
Description: G4MW29 (012711)
Matrix: Aqueous
Date Sampled: 01/27/2011 1535
Date Received: 01/29/2011

Run	Prep Method	Analytical Method	Dilution	Analysis Date	Analyst	Prep Date	Batch
1	3520C	8270D	1	02/02/2011 2159	JGH	01/31/2011 1400	51712

Parameter	CAS Number	Analytical Method	Result	Q	PQL	MDL	Units	Run
Acenaphthene	83-32-9	8270D	ND		1.0	0.090	ug/L	1
Acenaphthylene	208-96-8	8270D	ND		1.0	0.16	ug/L	1
Anthracene	120-12-7	8270D	ND		1.0	0.13	ug/L	1
Benzo(a)anthracene	56-55-3	8270D	ND		1.0	0.15	ug/L	1
Benzo(a)pyrene	50-32-8	8270D	ND		1.0	0.16	ug/L	1
Benzo(b)fluoranthene	205-99-2	8270D	ND		1.0	0.20	ug/L	1
Benzo(g,h,i)perylene	191-24-2	8270D	ND		1.0	0.23	ug/L	1
Benzo(k)fluoranthene	207-08-9	8270D	ND		1.0	0.12	ug/L	1
4-Bromophenyl phenyl ether	101-55-3	8270D	ND		1.0	0.12	ug/L	1
Butyl benzyl phthalate	85-68-7	8270D	ND		5.0	1.7	ug/L	1
Carbazole	86-74-8	8270D	ND		1.0	0.25	ug/L	1
4-Chloro-3-methyl phenol	59-50-7	8270D	ND		1.0	0.22	ug/L	1
4-Chloroaniline	106-47-8	8270D	ND		1.0	0.13	ug/L	1
bis(2-Chloroethoxy)methane	111-91-1	8270D	ND		1.0	0.13	ug/L	1
bis(2-Chloroisopropyl)ether	108-60-1	8270D	ND		1.0	0.080	ug/L	1
2-Chloronaphthalene	91-58-7	8270D	ND		1.0	0.12	ug/L	1
2-Chlorophenol	95-57-8	8270D	ND		1.0	0.13	ug/L	1
4-Chlorophenyl phenyl ether	7005-72-3	8270D	ND		1.0	0.11	ug/L	1
Chrysene	218-01-9	8270D	ND		1.0	0.12	ug/L	1
Dibenzo(a,h)anthracene	53-70-3	8270D	ND		1.0	0.13	ug/L	1
Dibenzofuran	132-64-9	8270D	ND		1.0	0.16	ug/L	1
3,3'-Dichlorobenzidine	91-94-1	8270D	ND		5.0	0.81	ug/L	1
2,4-Dichlorophenol	120-83-2	8270D	ND		1.0	0.15	ug/L	1
Diethylphthalate	84-66-2	8270D	ND		5.0	1.7	ug/L	1
Dimethyl phthalate	131-11-3	8270D	ND		5.0	1.7	ug/L	1
2,4-Dimethylphenol	105-67-9	8270D	ND		1.0	0.31	ug/L	1
Di-n-butyl phthalate	84-74-2	8270D	ND		5.0	1.7	ug/L	1
4,6-Dinitro-2-methylphenol	534-52-1	8270D	ND		5.0	1.5	ug/L	1
2,4-Dinitrophenol	51-28-5	8270D	ND		5.0	0.25	ug/L	1
2,4-Dinitrotoluene	121-14-2	8270D	ND		2.0	0.45	ug/L	1
2,6-Dinitrotoluene	606-20-2	8270D	ND		2.0	0.40	ug/L	1
Di-n-octylphthalate	117-84-0	8270D	ND		5.0	1.7	ug/L	1
bis(2-Ethylhexyl)phthalate	117-81-7	8270D	ND		5.0	1.7	ug/L	1
Fluoranthene	206-44-0	8270D	ND		1.0	0.21	ug/L	1
Fluorene	86-73-7	8270D	ND		1.0	0.10	ug/L	1
Hexachlorobenzene	118-74-1	8270D	ND		1.0	0.21	ug/L	1
Hexachlorobutadiene	87-68-3	8270D	ND		1.0	0.090	ug/L	1
Hexachlorocyclopentadiene	77-47-4	8270D	ND		5.0	0.23	ug/L	1
Hexachloroethane	67-72-1	8270D	ND		1.0	0.11	ug/L	1
Indeno(1,2,3-c,d)pyrene	193-39-5	8270D	ND		1.0	0.23	ug/L	1
Isophorone	78-59-1	8270D	ND		1.0	0.080	ug/L	1
2-Methylnaphthalene	91-57-6	8270D	ND		1.0	0.080	ug/L	1
2-Methylphenol	95-48-7	8270D	ND		1.0	0.17	ug/L	1
3 & 4-Methylphenol	106-44-5	8270D	ND		2.0	0.57	ug/L	1

PQL = Practical quantitation limit
B = Detected in the method blank
E = Quantitation of compound exceeded the calibration range
ND = Not detected at or above the MDL
J = Estimated result < PQL and ≥ MDL
P = The RPD between two GC columns exceeds 40%
Where applicable, all soil sample analysis are reported on a dry weight basis unless flagged with a "W"
N = Recovery is out of criteria
H = Out of holding time

Semivolatile Organic Compounds by GC/MS

Client: ARCADIS U.S., Inc.
Laboratory ID: MA26019-037
Description: G4MW29 (012711)
Matrix: Aqueous
Date Sampled: 01/27/2011 1535
Date Received: 01/29/2011

Run	Prep Method	Analytical Method	Dilution	Analysis Date	Analyst	Prep Date	Batch
1	3520C	8270D	1	02/02/2011 2159	JGH	01/31/2011 1400	51712

Parameter	CAS Number	Analytical Method	Result	Q	PQL	MDL	Units	Run
Naphthalene	91-20-3	8270D	ND		1.0	0.070	ug/L	1
2-Nitroaniline	88-74-4	8270D	ND		2.0	0.55	ug/L	1
3-Nitroaniline	99-09-2	8270D	ND		2.0	0.77	ug/L	1
4-Nitroaniline	100-01-6	8270D	ND		2.0	0.39	ug/L	1
Nitrobenzene	98-95-3	8270D	ND		1.0	0.10	ug/L	1
2-Nitrophenol	88-75-5	8270D	ND		2.0	0.27	ug/L	1
4-Nitrophenol	100-02-7	8270D	ND		5.0	0.64	ug/L	1
N-Nitrosodi-n-propylamine	621-64-7	8270D	ND		1.0	0.080	ug/L	1
N-Nitrosodiphenylamine (Diphenylamine)	86-30-6	8270D	ND		1.0	0.38	ug/L	1
Pentachlorophenol	87-86-5	8270D	ND		5.0	0.54	ug/L	1
Phenanthrene	85-01-8	8270D	ND		1.0	0.18	ug/L	1
Phenol	108-95-2	8270D	ND		1.0	0.11	ug/L	1
Pyrene	129-00-0	8270D	ND		1.0	0.16	ug/L	1
2,4,5-Trichlorophenol	95-95-4	8270D	ND		1.0	0.18	ug/L	1
2,4,6-Trichlorophenol	88-06-2	8270D	ND		1.0	0.22	ug/L	1

Surrogate	Q	Run 1 % Recovery	Acceptance Limits
2-Fluorobiphenyl		41	37-129
2-Fluorophenol		55	24-127
Nitrobenzene-d5		46	38-127
Phenol-d5		44	28-128
Terphenyl-d14		21	10-148
2,4,6-Tribromophenol		49	41-144

PQL = Practical quantitation limit
B = Detected in the method blank
E = Quantitation of compound exceeded the calibration range
ND = Not detected at or above the MDL
J = Estimated result < PQL and ≥ MDL
P = The RPD between two GC columns exceeds 40%
Where applicable, all soil sample analysis are reported on a dry weight basis unless flagged with a "W"
N = Recovery is out of criteria
H = Out of holding time

Dissolved RCRA Metals

Client: ARCADIS U.S., Inc.
Laboratory ID: MA26019-037
Description: G4MW29 (012711)
Matrix: Aqueous
Date Sampled: 01/27/2011 1535
Date Received: 01/29/2011

Run	Prep Method	Analytical Method	Dilution	Analysis Date	Analyst	Prep Date	Batch
1		7470A	1	02/01/2011 1624	BNW	02/01/2011 1020	51806
1	3005A	6010C	1	02/02/2011 2359	CDF	02/01/2011 1820	51872

Parameter	CAS Number	Analytical Method	Result	Q	PQL	MDL	Units	Run
Dissolved Arsenic	7440-38-2	6010C	0.41		0.010	0.0040	mg/L	1
Dissolved Barium	7440-39-3	6010C	2.0		0.025	0.0075	mg/L	1
Dissolved Cadmium	7440-43-9	6010C	0.40		0.0020	0.00060	mg/L	1
Dissolved Chromium	7440-47-3	6010C	2.0		0.0050	0.0021	mg/L	1
Dissolved Lead	7439-92-1	6010C	0.38		0.010	0.0019	mg/L	1
Dissolved Mercury	7439-97-6	7470A	ND		0.00010	0.000053	mg/L	1
Dissolved Selenium	7782-49-2	6010C	0.41		0.010	0.0026	mg/L	1
Dissolved Silver	7440-22-4	6010C	0.41		0.0050	0.00040	mg/L	1

PQL = Practical quantitation limit
B = Detected in the method blank
E = Quantitation of compound exceeded the calibration range
ND = Not detected at or above the MDL
J = Estimated result < PQL and ≥ MDL
P = The RPD between two GC columns exceeds 40%
Where applicable, all soil sample analysis are reported on a dry weight basis unless flagged with a "W"
N = Recovery is out of criteria
H = Out of holding time

RCRA Metals

Client: ARCADIS U.S., Inc.
Laboratory ID: MA26019-037
Description: G4MW29 (012711)
Matrix: Aqueous
Date Sampled: 01/27/2011 1535
Date Received: 01/29/2011

Run	Prep Method	Analytical Method	Dilution	Analysis Date	Analyst	Prep Date	Batch
1		7470A	1	02/01/2011 1619	BNW	02/01/2011 1020	51806
1	3005A	6010C	1	02/02/2011 2344	CDF	02/01/2011 1820	51872

Parameter	CAS Number	Analytical Method	Result	Q	PQL	MDL	Units	Run
Arsenic	7440-38-2	6010C	ND		0.010	0.0040	mg/L	1
Barium	7440-39-3	6010C	0.0076	J	0.025	0.0075	mg/L	1
Cadmium	7440-43-9	6010C	ND		0.0020	0.00060	mg/L	1
Chromium	7440-47-3	6010C	0.0062		0.0050	0.0021	mg/L	1
Lead	7439-92-1	6010C	0.010		0.010	0.0019	mg/L	1
Mercury	7439-97-6	7470A	0.000057	J	0.00010	0.000053	mg/L	1
Selenium	7782-49-2	6010C	0.0045	J	0.010	0.0026	mg/L	1
Silver	7440-22-4	6010C	0.00088	J	0.0050	0.00040	mg/L	1

PQL = Practical quantitation limit
B = Detected in the method blank
E = Quantitation of compound exceeded the calibration range
ND = Not detected at or above the MDL
J = Estimated result < PQL and ≥ MDL
P = The RPD between two GC columns exceeds 40%
Where applicable, all soil sample analysis are reported on a dry weight basis unless flagged with a "W"
N = Recovery is out of criteria
H = Out of holding time

Volatile Organic Compounds by GC/MS

Client: ARCADIS U.S., Inc.
Laboratory ID: MA26019-038
Description: G4MW36 (012711)
Matrix: Aqueous
Date Sampled: 01/27/2011 1830
Date Received: 01/29/2011

Run	Prep Method	Analytical Method	Dilution	Analysis Date	Analyst	Prep Date	Batch
1	5030B	8260B	1	02/01/2011 1708	DLB		51987

Parameter	CAS Number	Analytical Method	Result	Q	PQL	MDL	Units	Run
Acetone	67-64-1	8260B	ND		20	6.7	ug/L	1
Benzene	71-43-2	8260B	ND		1.0	0.13	ug/L	1
Bromodichloromethane	75-27-4	8260B	ND		1.0	0.33	ug/L	1
Bromoform	75-25-2	8260B	ND		1.0	0.66	ug/L	1
Bromomethane (Methyl bromide)	74-83-9	8260B	ND		2.0	0.80	ug/L	1
2-Butanone (MEK)	78-93-3	8260B	ND		10	2.0	ug/L	1
Carbon disulfide	75-15-0	8260B	ND		1.0	0.097	ug/L	1
Carbon tetrachloride	56-23-5	8260B	ND		1.0	0.14	ug/L	1
Chlorobenzene	108-90-7	8260B	ND		2.0	0.33	ug/L	1
Chloroethane	75-00-3	8260B	ND		2.0	0.47	ug/L	1
Chloroform	67-66-3	8260B	ND		1.0	0.33	ug/L	1
Chloromethane (Methyl chloride)	74-87-3	8260B	ND		1.0	0.35	ug/L	1
Dibromochloromethane	124-48-1	8260B	ND		1.0	0.33	ug/L	1
1,4-Dichlorobenzene	106-46-7	8260B	ND		1.0	0.33	ug/L	1
1,3-Dichlorobenzene	541-73-1	8260B	ND		1.0	0.33	ug/L	1
1,2-Dichlorobenzene	95-50-1	8260B	ND		1.0	0.33	ug/L	1
1,2-Dichloroethane	107-06-2	8260B	ND		1.0	0.15	ug/L	1
1,1-Dichloroethane	75-34-3	8260B	ND		1.0	0.13	ug/L	1
trans-1,2-Dichloroethene	156-60-5	8260B	ND		1.0	0.21	ug/L	1
cis-1,2-Dichloroethene	156-59-2	8260B	0.53	J	1.0	0.12	ug/L	1
1,1-Dichloroethene	75-35-4	8260B	ND		1.0	0.16	ug/L	1
1,2-Dichloropropane	78-87-5	8260B	ND		1.0	0.19	ug/L	1
trans-1,3-Dichloropropene	10061-02-6	8260B	ND		1.0	0.11	ug/L	1
cis-1,3-Dichloropropene	10061-01-5	8260B	ND		1.0	0.092	ug/L	1
Ethylbenzene	100-41-4	8260B	ND		1.0	0.33	ug/L	1
2-Hexanone	591-78-6	8260B	ND		10	0.27	ug/L	1
Methyl tertiary butyl ether (MTBE)	1634-04-4	8260B	ND		1.0	0.40	ug/L	1
4-Methyl-2-pentanone	108-10-1	8260B	ND		10	0.31	ug/L	1
Methylene chloride	75-09-2	8260B	ND		1.0	0.33	ug/L	1
Styrene	100-42-5	8260B	ND		1.0	0.12	ug/L	1
1,1,2,2-Tetrachloroethane	79-34-5	8260B	ND		1.0	0.16	ug/L	1
Tetrachloroethene	127-18-4	8260B	ND		1.0	0.13	ug/L	1
Toluene	108-88-3	8260B	ND		1.0	0.33	ug/L	1
1,2,4-Trichlorobenzene	120-82-1	8260B	ND		1.0	0.51	ug/L	1
1,1,2-Trichloroethane	79-00-5	8260B	ND		1.0	0.21	ug/L	1
1,1,1-Trichloroethane	71-55-6	8260B	ND		1.0	0.074	ug/L	1
Trichloroethene	79-01-6	8260B	0.38	J	1.0	0.18	ug/L	1
Vinyl chloride	75-01-4	8260B	ND		1.0	0.054	ug/L	1
Xylenes (total)	1330-20-7	8260B	ND		1.0	0.33	ug/L	1

PQL = Practical quantitation limit
B = Detected in the method blank
E = Quantitation of compound exceeded the calibration range
ND = Not detected at or above the MDL
J = Estimated result < PQL and ≥ MDL
P = The RPD between two GC columns exceeds 40%
Where applicable, all soil sample analysis are reported on a dry weight basis unless flagged with a "W"
N = Recovery is out of criteria
H = Out of holding time

Volatile Organic Compounds by GC/MS

Client: ARCADIS U.S., Inc.
Laboratory ID: MA26019-038
Description: G4MW36 (012711)
Matrix: Aqueous
Date Sampled: 01/27/2011 1830
Date Received: 01/29/2011

Surrogate	Q	Run 1 % Recovery	Acceptance Limits
1,2-Dichloroethane-d4		116	70-130
Bromofluorobenzene		112	70-130
Toluene-d8		108	70-130

PQL = Practical quantitation limit
B = Detected in the method blank
E = Quantitation of compound exceeded the calibration range
ND = Not detected at or above the MDL
J = Estimated result < PQL and ≥ MDL
P = The RPD between two GC columns exceeds 40%
Where applicable, all soil sample analysis are reported on a dry weight basis unless flagged with a "W"
N = Recovery is out of criteria
H = Out of holding time

Semivolatile Organic Compounds by GC/MS

Client: ARCADIS U.S., Inc.
Laboratory ID: MA26019-038
Description: G4MW36 (012711)
Matrix: Aqueous
Date Sampled: 01/27/2011 1830
Date Received: 01/29/2011

Run	Prep Method	Analytical Method	Dilution	Analysis Date	Analyst	Prep Date	Batch
1	3520C	8270D	1	02/02/2011 2036	WD	01/31/2011 1400	51712

Parameter	CAS Number	Analytical Method	Result	Q	PQL	MDL	Units	Run
Acenaphthene	83-32-9	8270D	ND		1.0	0.092	ug/L	1
Acenaphthylene	208-96-8	8270D	ND		1.0	0.16	ug/L	1
Anthracene	120-12-7	8270D	ND		1.0	0.13	ug/L	1
Benzo(a)anthracene	56-55-3	8270D	ND		1.0	0.15	ug/L	1
Benzo(a)pyrene	50-32-8	8270D	ND		1.0	0.16	ug/L	1
Benzo(b)fluoranthene	205-99-2	8270D	ND		1.0	0.20	ug/L	1
Benzo(g,h,i)perylene	191-24-2	8270D	ND		1.0	0.23	ug/L	1
Benzo(k)fluoranthene	207-08-9	8270D	ND		1.0	0.12	ug/L	1
4-Bromophenyl phenyl ether	101-55-3	8270D	ND		1.0	0.12	ug/L	1
Butyl benzyl phthalate	85-68-7	8270D	ND		5.1	1.7	ug/L	1
Carbazole	86-74-8	8270D	ND		1.0	0.26	ug/L	1
4-Chloro-3-methyl phenol	59-50-7	8270D	ND		1.0	0.22	ug/L	1
4-Chloroaniline	106-47-8	8270D	ND		1.0	0.13	ug/L	1
bis(2-Chloroethoxy)methane	111-91-1	8270D	ND		1.0	0.13	ug/L	1
bis(2-Chloroisopropyl)ether	108-60-1	8270D	ND		1.0	0.082	ug/L	1
2-Chloronaphthalene	91-58-7	8270D	ND		1.0	0.12	ug/L	1
2-Chlorophenol	95-57-8	8270D	ND		1.0	0.13	ug/L	1
4-Chlorophenyl phenyl ether	7005-72-3	8270D	ND		1.0	0.11	ug/L	1
Chrysene	218-01-9	8270D	ND		1.0	0.12	ug/L	1
Dibenzo(a,h)anthracene	53-70-3	8270D	ND		1.0	0.13	ug/L	1
Dibenzofuran	132-64-9	8270D	ND		1.0	0.16	ug/L	1
3,3'-Dichlorobenzidine	91-94-1	8270D	ND		5.1	0.83	ug/L	1
2,4-Dichlorophenol	120-83-2	8270D	ND		1.0	0.15	ug/L	1
Diethylphthalate	84-66-2	8270D	ND		5.1	1.7	ug/L	1
Dimethyl phthalate	131-11-3	8270D	ND		5.1	1.7	ug/L	1
2,4-Dimethylphenol	105-67-9	8270D	ND		1.0	0.32	ug/L	1
Di-n-butyl phthalate	84-74-2	8270D	ND		5.1	1.7	ug/L	1
4,6-Dinitro-2-methylphenol	534-52-1	8270D	ND		5.1	1.5	ug/L	1
2,4-Dinitrophenol	51-28-5	8270D	ND		5.1	0.26	ug/L	1
2,4-Dinitrotoluene	121-14-2	8270D	ND		2.0	0.46	ug/L	1
2,6-Dinitrotoluene	606-20-2	8270D	ND		2.0	0.41	ug/L	1
Di-n-octylphthalate	117-84-0	8270D	ND		5.1	1.7	ug/L	1
bis(2-Ethylhexyl)phthalate	117-81-7	8270D	ND		5.1	1.7	ug/L	1
Fluoranthene	206-44-0	8270D	ND		1.0	0.21	ug/L	1
Fluorene	86-73-7	8270D	ND		1.0	0.10	ug/L	1
Hexachlorobenzene	118-74-1	8270D	ND		1.0	0.21	ug/L	1
Hexachlorobutadiene	87-68-3	8270D	ND		1.0	0.092	ug/L	1
Hexachlorocyclopentadiene	77-47-4	8270D	ND		5.1	0.23	ug/L	1
Hexachloroethane	67-72-1	8270D	ND		1.0	0.11	ug/L	1
Indeno(1,2,3-c,d)pyrene	193-39-5	8270D	ND		1.0	0.23	ug/L	1
Isophorone	78-59-1	8270D	ND		1.0	0.082	ug/L	1
2-Methylnaphthalene	91-57-6	8270D	ND		1.0	0.082	ug/L	1
2-Methylphenol	95-48-7	8270D	ND		1.0	0.17	ug/L	1
3 & 4-Methylphenol	106-44-5	8270D	ND		2.0	0.58	ug/L	1

PQL = Practical quantitation limit
B = Detected in the method blank
E = Quantitation of compound exceeded the calibration range
ND = Not detected at or above the MDL
J = Estimated result < PQL and ≥ MDL
P = The RPD between two GC columns exceeds 40%
Where applicable, all soil sample analysis are reported on a dry weight basis unless flagged with a "W"
N = Recovery is out of criteria
H = Out of holding time

Semivolatile Organic Compounds by GC/MS

Client: ARCADIS U.S., Inc.
Laboratory ID: MA26019-038
Description: G4MW36 (012711)
Matrix: Aqueous
Date Sampled: 01/27/2011 1830
Date Received: 01/29/2011

Run	Prep Method	Analytical Method	Dilution	Analysis Date	Analyst	Prep Date	Batch
1	3520C	8270D	1	02/02/2011 2036	WD	01/31/2011 1400	51712

Parameter	CAS Number	Analytical Method	Result	Q	PQL	MDL	Units	Run
Naphthalene	91-20-3	8270D	ND		1.0	0.071	ug/L	1
2-Nitroaniline	88-74-4	8270D	ND		2.0	0.56	ug/L	1
3-Nitroaniline	99-09-2	8270D	ND		2.0	0.79	ug/L	1
4-Nitroaniline	100-01-6	8270D	ND		2.0	0.40	ug/L	1
Nitrobenzene	98-95-3	8270D	ND		1.0	0.10	ug/L	1
2-Nitrophenol	88-75-5	8270D	ND		2.0	0.28	ug/L	1
4-Nitrophenol	100-02-7	8270D	ND		5.1	0.65	ug/L	1
N-Nitrosodi-n-propylamine	621-64-7	8270D	ND		1.0	0.082	ug/L	1
N-Nitrosodiphenylamine (Diphenylamine)	86-30-6	8270D	ND		1.0	0.39	ug/L	1
Pentachlorophenol	87-86-5	8270D	ND		5.1	0.55	ug/L	1
Phenanthrene	85-01-8	8270D	ND		1.0	0.18	ug/L	1
Phenol	108-95-2	8270D	ND		1.0	0.11	ug/L	1
Pyrene	129-00-0	8270D	ND		1.0	0.16	ug/L	1
2,4,5-Trichlorophenol	95-95-4	8270D	ND		1.0	0.18	ug/L	1
2,4,6-Trichlorophenol	88-06-2	8270D	ND		1.0	0.22	ug/L	1

Surrogate	Q	Run 1 % Recovery	Acceptance Limits
2-Fluorobiphenyl		52	37-129
2-Fluorophenol		52	24-127
Nitrobenzene-d5		57	38-127
Phenol-d5		52	28-128
Terphenyl-d14		58	10-148
2,4,6-Tribromophenol		59	41-144

PQL = Practical quantitation limit
B = Detected in the method blank
E = Quantitation of compound exceeded the calibration range
ND = Not detected at or above the MDL
J = Estimated result < PQL and ≥ MDL
P = The RPD between two GC columns exceeds 40%
Where applicable, all soil sample analysis are reported on a dry weight basis unless flagged with a "W"
N = Recovery is out of criteria
H = Out of holding time

Dissolved RCRA Metals

Client: ARCADIS U.S., Inc.
Laboratory ID: MA26019-038
Description: G4MW36 (012711)
Matrix: Aqueous
Date Sampled: 01/27/2011 1830
Date Received: 01/29/2011

Run	Prep Method	Analytical Method	Dilution	Analysis Date	Analyst	Prep Date	Batch
1		7470A	1	02/01/2011 1629	BNW	02/01/2011 1020	51806
1	3005A	6010C	1	02/03/2011 0026	CDF	02/01/2011 1820	51872

Parameter	CAS Number	Analytical Method	Result	Q	PQL	MDL	Units	Run
Dissolved Arsenic	7440-38-2	6010C	0.012		0.010	0.0040	mg/L	1
Dissolved Barium	7440-39-3	6010C	0.019	J	0.025	0.0075	mg/L	1
Dissolved Cadmium	7440-43-9	6010C	ND		0.0020	0.00060	mg/L	1
Dissolved Chromium	7440-47-3	6010C	ND		0.0050	0.0021	mg/L	1
Dissolved Lead	7439-92-1	6010C	ND		0.010	0.0019	mg/L	1
Dissolved Mercury	7439-97-6	7470A	ND		0.00010	0.000053	mg/L	1
Dissolved Selenium	7782-49-2	6010C	0.0051	J	0.010	0.0026	mg/L	1
Dissolved Silver	7440-22-4	6010C	ND		0.0050	0.00040	mg/L	1

PQL = Practical quantitation limit
B = Detected in the method blank
E = Quantitation of compound exceeded the calibration range
ND = Not detected at or above the MDL
J = Estimated result < PQL and ≥ MDL
P = The RPD between two GC columns exceeds 40%
Where applicable, all soil sample analysis are reported on a dry weight basis unless flagged with a "W"
N = Recovery is out of criteria
H = Out of holding time

RCRA Metals

Client: ARCADIS U.S., Inc.
Laboratory ID: MA26019-038
Description: G4MW36 (012711)
Matrix: Aqueous
Date Sampled: 01/27/2011 1830
Date Received: 01/29/2011

Run	Prep Method	Analytical Method	Dilution	Analysis Date	Analyst	Prep Date	Batch
1		7470A	1	02/01/2011 1626	BNW	02/01/2011 1020	51806
1	3005A	6010C	1	02/03/2011 0007	CDF	02/01/2011 1820	51872

Parameter	CAS Number	Analytical Method	Result	Q	PQL	MDL	Units	Run
Arsenic	7440-38-2	6010C	0.015		0.010	0.0040	mg/L	1
Barium	7440-39-3	6010C	0.019	J	0.025	0.0075	mg/L	1
Cadmium	7440-43-9	6010C	ND		0.0020	0.00060	mg/L	1
Chromium	7440-47-3	6010C	ND		0.0050	0.0021	mg/L	1
Lead	7439-92-1	6010C	0.0032	J	0.010	0.0019	mg/L	1
Mercury	7439-97-6	7470A	0.000055	J	0.00010	0.000053	mg/L	1
Selenium	7782-49-2	6010C	ND		0.010	0.0026	mg/L	1
Silver	7440-22-4	6010C	ND		0.0050	0.00040	mg/L	1

PQL = Practical quantitation limit
B = Detected in the method blank
E = Quantitation of compound exceeded the calibration range
ND = Not detected at or above the MDL
J = Estimated result < PQL and ≥ MDL
P = The RPD between two GC columns exceeds 40%
Where applicable, all soil sample analysis are reported on a dry weight basis unless flagged with a "W"
N = Recovery is out of criteria
H = Out of holding time

Volatile Organic Compounds by GC/MS

Client: ARCADIS U.S., Inc.
Laboratory ID: MA26019-039
Description: G4MW41 (012711)
Matrix: Aqueous
Date Sampled: 01/27/2011 1945
Date Received: 01/29/2011

Run	Prep Method	Analytical Method	Dilution	Analysis Date	Analyst	Prep Date	Batch
1	5030B	8260B	10	02/01/2011 1853	DLB		51987

Parameter	CAS Number	Analytical Method	Result	Q	PQL	MDL	Units	Run
Acetone	67-64-1	8260B	ND		200	67	ug/L	1
Benzene	71-43-2	8260B	ND		10	1.3	ug/L	1
Bromodichloromethane	75-27-4	8260B	ND		10	3.3	ug/L	1
Bromoform	75-25-2	8260B	ND		10	6.6	ug/L	1
Bromomethane (Methyl bromide)	74-83-9	8260B	ND		20	8.0	ug/L	1
2-Butanone (MEK)	78-93-3	8260B	ND		100	20	ug/L	1
Carbon disulfide	75-15-0	8260B	ND		10	0.97	ug/L	1
Carbon tetrachloride	56-23-5	8260B	ND		10	1.4	ug/L	1
Chlorobenzene	108-90-7	8260B	ND		20	3.3	ug/L	1
Chloroethane	75-00-3	8260B	ND		20	4.7	ug/L	1
Chloroform	67-66-3	8260B	ND		10	3.3	ug/L	1
Chloromethane (Methyl chloride)	74-87-3	8260B	ND		10	3.5	ug/L	1
Dibromochloromethane	124-48-1	8260B	ND		10	3.3	ug/L	1
1,4-Dichlorobenzene	106-46-7	8260B	ND		10	3.3	ug/L	1
1,3-Dichlorobenzene	541-73-1	8260B	ND		10	3.3	ug/L	1
1,2-Dichlorobenzene	95-50-1	8260B	ND		10	3.3	ug/L	1
1,2-Dichloroethane	107-06-2	8260B	ND		10	1.5	ug/L	1
1,1-Dichloroethane	75-34-3	8260B	ND		10	1.3	ug/L	1
trans-1,2-Dichloroethene	156-60-5	8260B	6.4	J	10	2.1	ug/L	1
cis-1,2-Dichloroethene	156-59-2	8260B	97		10	1.2	ug/L	1
1,1-Dichloroethene	75-35-4	8260B	ND		10	1.6	ug/L	1
1,2-Dichloropropane	78-87-5	8260B	ND		10	1.9	ug/L	1
trans-1,3-Dichloropropene	10061-02-6	8260B	ND		10	1.1	ug/L	1
cis-1,3-Dichloropropene	10061-01-5	8260B	ND		10	0.92	ug/L	1
Ethylbenzene	100-41-4	8260B	ND		10	3.3	ug/L	1
2-Hexanone	591-78-6	8260B	ND		100	2.7	ug/L	1
Methyl tertiary butyl ether (MTBE)	1634-04-4	8260B	ND		10	4.0	ug/L	1
4-Methyl-2-pentanone	108-10-1	8260B	ND		100	3.1	ug/L	1
Methylene chloride	75-09-2	8260B	ND		10	3.3	ug/L	1
Styrene	100-42-5	8260B	ND		10	1.2	ug/L	1
1,1,2,2-Tetrachloroethane	79-34-5	8260B	ND		10	1.6	ug/L	1
Tetrachloroethene	127-18-4	8260B	290		10	1.3	ug/L	1
Toluene	108-88-3	8260B	ND		10	3.3	ug/L	1
1,2,4-Trichlorobenzene	120-82-1	8260B	ND		10	5.1	ug/L	1
1,1,2-Trichloroethane	79-00-5	8260B	ND		10	2.1	ug/L	1
1,1,1-Trichloroethane	71-55-6	8260B	ND		10	0.74	ug/L	1
Trichloroethene	79-01-6	8260B	550		10	1.8	ug/L	1
Vinyl chloride	75-01-4	8260B	ND		10	0.54	ug/L	1
Xylenes (total)	1330-20-7	8260B	ND		10	3.3	ug/L	1

PQL = Practical quantitation limit
B = Detected in the method blank
E = Quantitation of compound exceeded the calibration range
ND = Not detected at or above the MDL
J = Estimated result < PQL and ≥ MDL
P = The RPD between two GC columns exceeds 40%
Where applicable, all soil sample analysis are reported on a dry weight basis unless flagged with a "W"
N = Recovery is out of criteria
H = Out of holding time

Volatile Organic Compounds by GC/MS

Client: ARCADIS U.S., Inc.
Laboratory ID: MA26019-039
Description: G4MW41 (012711)
Matrix: Aqueous
Date Sampled: 01/27/2011 1945
Date Received: 01/29/2011

Surrogate	Q	Run 1 % Recovery	Acceptance Limits
1,2-Dichloroethane-d4		119	70-130
Bromofluorobenzene		115	70-130
Toluene-d8		109	70-130

PQL = Practical quantitation limit
B = Detected in the method blank
E = Quantitation of compound exceeded the calibration range
ND = Not detected at or above the MDL
J = Estimated result < PQL and ≥ MDL
P = The RPD between two GC columns exceeds 40%
Where applicable, all soil sample analysis are reported on a dry weight basis unless flagged with a "W"
N = Recovery is out of criteria
H = Out of holding time

Semivolatile Organic Compounds by GC/MS

Client: ARCADIS U.S., Inc.
Laboratory ID: MA26019-039
Description: G4MW41 (012711)
Matrix: Aqueous
Date Sampled: 01/27/2011 1945
Date Received: 01/29/2011

Run	Prep Method	Analytical Method	Dilution	Analysis Date	Analyst	Prep Date	Batch
1	3520C	8270D	1	02/04/2011 1502	JGH	01/31/2011 1400	51712

Parameter	CAS Number	Analytical Method	Result	Q	PQL	MDL	Units	Run
Acenaphthene	83-32-9	8270D	ND		1.0	0.091	ug/L	1
Acenaphthylene	208-96-8	8270D	ND		1.0	0.16	ug/L	1
Anthracene	120-12-7	8270D	ND		1.0	0.13	ug/L	1
Benzo(a)anthracene	56-55-3	8270D	ND		1.0	0.15	ug/L	1
Benzo(a)pyrene	50-32-8	8270D	ND		1.0	0.16	ug/L	1
Benzo(b)fluoranthene	205-99-2	8270D	ND		1.0	0.20	ug/L	1
Benzo(g,h,i)perylene	191-24-2	8270D	ND		1.0	0.23	ug/L	1
Benzo(k)fluoranthene	207-08-9	8270D	ND		1.0	0.12	ug/L	1
4-Bromophenyl phenyl ether	101-55-3	8270D	ND		1.0	0.12	ug/L	1
Butyl benzyl phthalate	85-68-7	8270D	ND		5.1	1.7	ug/L	1
Carbazole	86-74-8	8270D	ND		1.0	0.25	ug/L	1
4-Chloro-3-methyl phenol	59-50-7	8270D	ND		1.0	0.22	ug/L	1
4-Chloroaniline	106-47-8	8270D	ND		1.0	0.13	ug/L	1
bis(2-Chloroethoxy)methane	111-91-1	8270D	ND		1.0	0.13	ug/L	1
bis(2-Chloroisopropyl)ether	108-60-1	8270D	ND		1.0	0.081	ug/L	1
2-Chloronaphthalene	91-58-7	8270D	ND		1.0	0.12	ug/L	1
2-Chlorophenol	95-57-8	8270D	ND		1.0	0.13	ug/L	1
4-Chlorophenyl phenyl ether	7005-72-3	8270D	ND		1.0	0.11	ug/L	1
Chrysene	218-01-9	8270D	ND		1.0	0.12	ug/L	1
Dibenzo(a,h)anthracene	53-70-3	8270D	ND		1.0	0.13	ug/L	1
Dibenzofuran	132-64-9	8270D	ND		1.0	0.16	ug/L	1
3,3'-Dichlorobenzidine	91-94-1	8270D	ND		5.1	0.82	ug/L	1
2,4-Dichlorophenol	120-83-2	8270D	ND		1.0	0.15	ug/L	1
Diethylphthalate	84-66-2	8270D	ND		5.1	1.7	ug/L	1
Dimethyl phthalate	131-11-3	8270D	ND		5.1	1.7	ug/L	1
2,4-Dimethylphenol	105-67-9	8270D	ND		1.0	0.31	ug/L	1
Di-n-butyl phthalate	84-74-2	8270D	ND		5.1	1.7	ug/L	1
4,6-Dinitro-2-methylphenol	534-52-1	8270D	ND		5.1	1.5	ug/L	1
2,4-Dinitrophenol	51-28-5	8270D	ND		5.1	0.25	ug/L	1
2,4-Dinitrotoluene	121-14-2	8270D	ND		2.0	0.45	ug/L	1
2,6-Dinitrotoluene	606-20-2	8270D	ND		2.0	0.40	ug/L	1
Di-n-octylphthalate	117-84-0	8270D	ND		5.1	1.7	ug/L	1
bis(2-Ethylhexyl)phthalate	117-81-7	8270D	ND		5.1	1.7	ug/L	1
Fluoranthene	206-44-0	8270D	ND		1.0	0.21	ug/L	1
Fluorene	86-73-7	8270D	ND		1.0	0.10	ug/L	1
Hexachlorobenzene	118-74-1	8270D	ND		1.0	0.21	ug/L	1
Hexachlorobutadiene	87-68-3	8270D	ND		1.0	0.091	ug/L	1
Hexachlorocyclopentadiene	77-47-4	8270D	ND		5.1	0.23	ug/L	1
Hexachloroethane	67-72-1	8270D	ND		1.0	0.11	ug/L	1
Indeno(1,2,3-c,d)pyrene	193-39-5	8270D	ND		1.0	0.23	ug/L	1
Isophorone	78-59-1	8270D	ND		1.0	0.081	ug/L	1
2-Methylnaphthalene	91-57-6	8270D	ND		1.0	0.081	ug/L	1
2-Methylphenol	95-48-7	8270D	ND		1.0	0.17	ug/L	1
3 & 4-Methylphenol	106-44-5	8270D	ND		2.0	0.58	ug/L	1

PQL = Practical quantitation limit
B = Detected in the method blank
E = Quantitation of compound exceeded the calibration range
ND = Not detected at or above the MDL
J = Estimated result < PQL and ≥ MDL
P = The RPD between two GC columns exceeds 40%
Where applicable, all soil sample analysis are reported on a dry weight basis unless flagged with a "W"
N = Recovery is out of criteria
H = Out of holding time

Semivolatile Organic Compounds by GC/MS

Client: ARCADIS U.S., Inc.
Laboratory ID: MA26019-039
Description: G4MW41 (012711)
Matrix: Aqueous
Date Sampled: 01/27/2011 1945
Date Received: 01/29/2011

Run	Prep Method	Analytical Method	Dilution	Analysis Date	Analyst	Prep Date	Batch
1	3520C	8270D	1	02/04/2011 1502	JGH	01/31/2011 1400	51712

Parameter	CAS Number	Analytical Method	Result	Q	PQL	MDL	Units	Run
Naphthalene	91-20-3	8270D	ND		1.0	0.071	ug/L	1
2-Nitroaniline	88-74-4	8270D	ND		2.0	0.56	ug/L	1
3-Nitroaniline	99-09-2	8270D	ND		2.0	0.78	ug/L	1
4-Nitroaniline	100-01-6	8270D	ND		2.0	0.39	ug/L	1
Nitrobenzene	98-95-3	8270D	ND		1.0	0.10	ug/L	1
2-Nitrophenol	88-75-5	8270D	ND		2.0	0.27	ug/L	1
4-Nitrophenol	100-02-7	8270D	ND		5.1	0.65	ug/L	1
N-Nitrosodi-n-propylamine	621-64-7	8270D	ND		1.0	0.081	ug/L	1
N-Nitrosodiphenylamine (Diphenylamine)	86-30-6	8270D	ND		1.0	0.38	ug/L	1
Pentachlorophenol	87-86-5	8270D	ND		5.1	0.55	ug/L	1
Phenanthrene	85-01-8	8270D	ND		1.0	0.18	ug/L	1
Phenol	108-95-2	8270D	ND		1.0	0.11	ug/L	1
Pyrene	129-00-0	8270D	ND		1.0	0.16	ug/L	1
2,4,5-Trichlorophenol	95-95-4	8270D	ND		1.0	0.18	ug/L	1
2,4,6-Trichlorophenol	88-06-2	8270D	ND		1.0	0.22	ug/L	1

Surrogate	Q	Run 1 % Recovery	Acceptance Limits
2-Fluorobiphenyl		61	37-129
2-Fluorophenol		51	24-127
Nitrobenzene-d5		61	38-127
Phenol-d5		57	28-128
Terphenyl-d14		54	10-148
2,4,6-Tribromophenol		68	41-144

PQL = Practical quantitation limit
B = Detected in the method blank
E = Quantitation of compound exceeded the calibration range
ND = Not detected at or above the MDL
J = Estimated result < PQL and ≥ MDL
P = The RPD between two GC columns exceeds 40%
Where applicable, all soil sample analysis are reported on a dry weight basis unless flagged with a "W"
N = Recovery is out of criteria
H = Out of holding time

Dissolved RCRA Metals

Client: ARCADIS U.S., Inc.
Laboratory ID: MA26019-039
Description: G4MW41 (012711)
Matrix: Aqueous
Date Sampled: 01/27/2011 1945
Date Received: 01/29/2011

Run	Prep Method	Analytical Method	Dilution	Analysis Date	Analyst	Prep Date	Batch
1		7470A	1	02/01/2011 1639	BNW	02/01/2011 1020	51806
1	3005A	6010C	1	02/03/2011 0033	CDF	02/01/2011 1820	51872

Parameter	CAS Number	Analytical Method	Result	Q	PQL	MDL	Units	Run
Dissolved Arsenic	7440-38-2	6010C	ND		0.010	0.0040	mg/L	1
Dissolved Barium	7440-39-3	6010C	0.11		0.025	0.0075	mg/L	1
Dissolved Cadmium	7440-43-9	6010C	ND		0.0020	0.00060	mg/L	1
Dissolved Chromium	7440-47-3	6010C	ND		0.0050	0.0021	mg/L	1
Dissolved Lead	7439-92-1	6010C	0.011		0.010	0.0019	mg/L	1
Dissolved Mercury	7439-97-6	7470A	ND		0.00010	0.000053	mg/L	1
Dissolved Selenium	7782-49-2	6010C	ND		0.010	0.0026	mg/L	1
Dissolved Silver	7440-22-4	6010C	ND		0.0050	0.00040	mg/L	1

PQL = Practical quantitation limit
B = Detected in the method blank
E = Quantitation of compound exceeded the calibration range
ND = Not detected at or above the MDL
J = Estimated result < PQL and ≥ MDL
P = The RPD between two GC columns exceeds 40%
Where applicable, all soil sample analysis are reported on a dry weight basis unless flagged with a "W"
N = Recovery is out of criteria
H = Out of holding time

RCRA Metals

Client: ARCADIS U.S., Inc.
Laboratory ID: MA26019-039
Description: G4MW41 (012711)
Matrix: Aqueous
Date Sampled: 01/27/2011 1945
Date Received: 01/29/2011

Run	Prep Method	Analytical Method	Dilution	Analysis Date	Analyst	Prep Date	Batch
1		7470A	1	02/01/2011 1631	BNW	02/01/2011 1020	51806
1	3005A	6010C	1	02/03/2011 0029	CDF	02/01/2011 1820	51872

Parameter	CAS Number	Analytical Method	Result	Q	PQL	MDL	Units	Run
Arsenic	7440-38-2	6010C	ND		0.010	0.0040	mg/L	1
Barium	7440-39-3	6010C	0.11		0.025	0.0075	mg/L	1
Cadmium	7440-43-9	6010C	ND		0.0020	0.00060	mg/L	1
Chromium	7440-47-3	6010C	0.0021	J	0.0050	0.0021	mg/L	1
Lead	7439-92-1	6010C	0.0058	J	0.010	0.0019	mg/L	1
Mercury	7439-97-6	7470A	ND		0.00010	0.000053	mg/L	1
Selenium	7782-49-2	6010C	0.0044	J	0.010	0.0026	mg/L	1
Silver	7440-22-4	6010C	ND		0.0050	0.00040	mg/L	1

PQL = Practical quantitation limit
B = Detected in the method blank
E = Quantitation of compound exceeded the calibration range
ND = Not detected at or above the MDL
J = Estimated result < PQL and ≥ MDL
P = The RPD between two GC columns exceeds 40%
Where applicable, all soil sample analysis are reported on a dry weight basis unless flagged with a "W"
N = Recovery is out of criteria
H = Out of holding time

Volatile Organic Compounds by GC/MS

Client: ARCADIS U.S., Inc.
Laboratory ID: MA26019-040
Description: G4MW19 (012711)
Matrix: Aqueous
Date Sampled: 01/27/2011 1355
Date Received: 01/29/2011

Run	Prep Method	Analytical Method	Dilution	Analysis Date	Analyst	Prep Date	Batch
1	5030B	8260B	1	02/01/2011 1729	DLB		51987

Parameter	CAS Number	Analytical Method	Result	Q	PQL	MDL	Units	Run
Acetone	67-64-1	8260B	10	J	20	6.7	ug/L	1
Benzene	71-43-2	8260B	ND		1.0	0.13	ug/L	1
Bromodichloromethane	75-27-4	8260B	ND		1.0	0.33	ug/L	1
Bromoform	75-25-2	8260B	ND		1.0	0.66	ug/L	1
Bromomethane (Methyl bromide)	74-83-9	8260B	ND		2.0	0.80	ug/L	1
2-Butanone (MEK)	78-93-3	8260B	25		10	2.0	ug/L	1
Carbon disulfide	75-15-0	8260B	ND		1.0	0.097	ug/L	1
Carbon tetrachloride	56-23-5	8260B	ND		1.0	0.14	ug/L	1
Chlorobenzene	108-90-7	8260B	ND		2.0	0.33	ug/L	1
Chloroethane	75-00-3	8260B	ND		2.0	0.47	ug/L	1
Chloroform	67-66-3	8260B	ND		1.0	0.33	ug/L	1
Chloromethane (Methyl chloride)	74-87-3	8260B	ND		1.0	0.35	ug/L	1
Dibromochloromethane	124-48-1	8260B	ND		1.0	0.33	ug/L	1
1,4-Dichlorobenzene	106-46-7	8260B	ND		1.0	0.33	ug/L	1
1,3-Dichlorobenzene	541-73-1	8260B	ND		1.0	0.33	ug/L	1
1,2-Dichlorobenzene	95-50-1	8260B	ND		1.0	0.33	ug/L	1
1,2-Dichloroethane	107-06-2	8260B	ND		1.0	0.15	ug/L	1
1,1-Dichloroethane	75-34-3	8260B	ND		1.0	0.13	ug/L	1
trans-1,2-Dichloroethene	156-60-5	8260B	5.4		1.0	0.21	ug/L	1
cis-1,2-Dichloroethene	156-59-2	8260B	16		1.0	0.12	ug/L	1
1,1-Dichloroethene	75-35-4	8260B	0.59	J	1.0	0.16	ug/L	1
1,2-Dichloropropane	78-87-5	8260B	ND		1.0	0.19	ug/L	1
trans-1,3-Dichloropropene	10061-02-6	8260B	ND		1.0	0.11	ug/L	1
cis-1,3-Dichloropropene	10061-01-5	8260B	ND		1.0	0.092	ug/L	1
Ethylbenzene	100-41-4	8260B	ND		1.0	0.33	ug/L	1
2-Hexanone	591-78-6	8260B	ND		10	0.27	ug/L	1
Methyl tertiary butyl ether (MTBE)	1634-04-4	8260B	ND		1.0	0.40	ug/L	1
4-Methyl-2-pentanone	108-10-1	8260B	ND		10	0.31	ug/L	1
Methylene chloride	75-09-2	8260B	ND		1.0	0.33	ug/L	1
Styrene	100-42-5	8260B	ND		1.0	0.12	ug/L	1
1,1,2,2-Tetrachloroethane	79-34-5	8260B	ND		1.0	0.16	ug/L	1
Tetrachloroethene	127-18-4	8260B	ND		1.0	0.13	ug/L	1
Toluene	108-88-3	8260B	ND		1.0	0.33	ug/L	1
1,2,4-Trichlorobenzene	120-82-1	8260B	ND		1.0	0.51	ug/L	1
1,1,2-Trichloroethane	79-00-5	8260B	ND		1.0	0.21	ug/L	1
1,1,1-Trichloroethane	71-55-6	8260B	ND		1.0	0.074	ug/L	1
Trichloroethene	79-01-6	8260B	6.3		1.0	0.18	ug/L	1
Vinyl chloride	75-01-4	8260B	ND		1.0	0.054	ug/L	1
Xylenes (total)	1330-20-7	8260B	ND		1.0	0.33	ug/L	1

PQL = Practical quantitation limit
B = Detected in the method blank
E = Quantitation of compound exceeded the calibration range
ND = Not detected at or above the MDL
J = Estimated result < PQL and ≥ MDL
P = The RPD between two GC columns exceeds 40%
Where applicable, all soil sample analysis are reported on a dry weight basis unless flagged with a "W"
N = Recovery is out of criteria
H = Out of holding time

Volatile Organic Compounds by GC/MS

Client: ARCADIS U.S., Inc.
Laboratory ID: MA26019-040
Description: G4MW19 (012711)
Matrix: Aqueous
Date Sampled: 01/27/2011 1355
Date Received: 01/29/2011

Surrogate	Q	Run 1 % Recovery	Acceptance Limits
1,2-Dichloroethane-d4		118	70-130
Bromofluorobenzene		114	70-130
Toluene-d8		107	70-130

PQL = Practical quantitation limit
B = Detected in the method blank
E = Quantitation of compound exceeded the calibration range
ND = Not detected at or above the MDL
J = Estimated result < PQL and ≥ MDL
P = The RPD between two GC columns exceeds 40%
Where applicable, all soil sample analysis are reported on a dry weight basis unless flagged with a "W"
N = Recovery is out of criteria
H = Out of holding time

Semivolatile Organic Compounds by GC/MS

Client: ARCADIS U.S., Inc.
Laboratory ID: MA26019-040
Description: G4MW19 (012711)
Matrix: Aqueous
Date Sampled: 01/27/2011 1355
Date Received: 01/29/2011

Run	Prep Method	Analytical Method	Dilution	Analysis Date	Analyst	Prep Date	Batch
1	3520C	8270D	1	02/02/2011 2056	WD	01/31/2011 1400	51712

Parameter	CAS Number	Analytical Method	Result	Q	PQL	MDL	Units	Run
Acenaphthene	83-32-9	8270D	ND		1.0	0.090	ug/L	1
Acenaphthylene	208-96-8	8270D	ND		1.0	0.16	ug/L	1
Anthracene	120-12-7	8270D	ND		1.0	0.13	ug/L	1
Benzo(a)anthracene	56-55-3	8270D	ND		1.0	0.15	ug/L	1
Benzo(a)pyrene	50-32-8	8270D	ND		1.0	0.16	ug/L	1
Benzo(b)fluoranthene	205-99-2	8270D	ND		1.0	0.20	ug/L	1
Benzo(g,h,i)perylene	191-24-2	8270D	ND		1.0	0.23	ug/L	1
Benzo(k)fluoranthene	207-08-9	8270D	ND		1.0	0.12	ug/L	1
4-Bromophenyl phenyl ether	101-55-3	8270D	ND		1.0	0.12	ug/L	1
Butyl benzyl phthalate	85-68-7	8270D	ND		5.0	1.7	ug/L	1
Carbazole	86-74-8	8270D	ND		1.0	0.25	ug/L	1
4-Chloro-3-methyl phenol	59-50-7	8270D	ND		1.0	0.22	ug/L	1
4-Chloroaniline	106-47-8	8270D	ND		1.0	0.13	ug/L	1
bis(2-Chloroethoxy)methane	111-91-1	8270D	ND		1.0	0.13	ug/L	1
bis(2-Chloroisopropyl)ether	108-60-1	8270D	ND		1.0	0.080	ug/L	1
2-Chloronaphthalene	91-58-7	8270D	ND		1.0	0.12	ug/L	1
2-Chlorophenol	95-57-8	8270D	ND		1.0	0.13	ug/L	1
4-Chlorophenyl phenyl ether	7005-72-3	8270D	ND		1.0	0.11	ug/L	1
Chrysene	218-01-9	8270D	ND		1.0	0.12	ug/L	1
Dibenzo(a,h)anthracene	53-70-3	8270D	ND		1.0	0.13	ug/L	1
Dibenzofuran	132-64-9	8270D	ND		1.0	0.16	ug/L	1
3,3'-Dichlorobenzidine	91-94-1	8270D	ND		5.0	0.81	ug/L	1
2,4-Dichlorophenol	120-83-2	8270D	ND		1.0	0.15	ug/L	1
Diethylphthalate	84-66-2	8270D	ND		5.0	1.7	ug/L	1
Dimethyl phthalate	131-11-3	8270D	ND		5.0	1.7	ug/L	1
2,4-Dimethylphenol	105-67-9	8270D	ND		1.0	0.31	ug/L	1
Di-n-butyl phthalate	84-74-2	8270D	ND		5.0	1.7	ug/L	1
4,6-Dinitro-2-methylphenol	534-52-1	8270D	ND		5.0	1.5	ug/L	1
2,4-Dinitrophenol	51-28-5	8270D	ND		5.0	0.25	ug/L	1
2,4-Dinitrotoluene	121-14-2	8270D	ND		2.0	0.45	ug/L	1
2,6-Dinitrotoluene	606-20-2	8270D	ND		2.0	0.40	ug/L	1
Di-n-octylphthalate	117-84-0	8270D	ND		5.0	1.7	ug/L	1
bis(2-Ethylhexyl)phthalate	117-81-7	8270D	ND		5.0	1.7	ug/L	1
Fluoranthene	206-44-0	8270D	ND		1.0	0.21	ug/L	1
Fluorene	86-73-7	8270D	ND		1.0	0.10	ug/L	1
Hexachlorobenzene	118-74-1	8270D	ND		1.0	0.21	ug/L	1
Hexachlorobutadiene	87-68-3	8270D	ND		1.0	0.090	ug/L	1
Hexachlorocyclopentadiene	77-47-4	8270D	ND		5.0	0.23	ug/L	1
Hexachloroethane	67-72-1	8270D	ND		1.0	0.11	ug/L	1
Indeno(1,2,3-c,d)pyrene	193-39-5	8270D	ND		1.0	0.23	ug/L	1
Isophorone	78-59-1	8270D	ND		1.0	0.080	ug/L	1
2-Methylnaphthalene	91-57-6	8270D	ND		1.0	0.080	ug/L	1
2-Methylphenol	95-48-7	8270D	ND		1.0	0.17	ug/L	1
3 & 4-Methylphenol	106-44-5	8270D	ND		2.0	0.57	ug/L	1

PQL = Practical quantitation limit
B = Detected in the method blank
E = Quantitation of compound exceeded the calibration range
ND = Not detected at or above the MDL
J = Estimated result < PQL and ≥ MDL
P = The RPD between two GC columns exceeds 40%
Where applicable, all soil sample analysis are reported on a dry weight basis unless flagged with a "W"
N = Recovery is out of criteria
H = Out of holding time

Semivolatile Organic Compounds by GC/MS

Client: ARCADIS U.S., Inc.
Laboratory ID: MA26019-040
Description: G4MW19 (012711)
Matrix: Aqueous
Date Sampled: 01/27/2011 1355
Date Received: 01/29/2011

Run	Prep Method	Analytical Method	Dilution	Analysis Date	Analyst	Prep Date	Batch
1	3520C	8270D	1	02/02/2011 2056	WD	01/31/2011 1400	51712

Parameter	CAS Number	Analytical Method	Result	Q	PQL	MDL	Units	Run
Naphthalene	91-20-3	8270D	ND		1.0	0.070	ug/L	1
2-Nitroaniline	88-74-4	8270D	ND		2.0	0.55	ug/L	1
3-Nitroaniline	99-09-2	8270D	ND		2.0	0.77	ug/L	1
4-Nitroaniline	100-01-6	8270D	ND		2.0	0.39	ug/L	1
Nitrobenzene	98-95-3	8270D	ND		1.0	0.10	ug/L	1
2-Nitrophenol	88-75-5	8270D	ND		2.0	0.27	ug/L	1
4-Nitrophenol	100-02-7	8270D	ND		5.0	0.64	ug/L	1
N-Nitrosodi-n-propylamine	621-64-7	8270D	ND		1.0	0.080	ug/L	1
N-Nitrosodiphenylamine (Diphenylamine)	86-30-6	8270D	ND		1.0	0.38	ug/L	1
Pentachlorophenol	87-86-5	8270D	ND		5.0	0.54	ug/L	1
Phenanthrene	85-01-8	8270D	ND		1.0	0.18	ug/L	1
Phenol	108-95-2	8270D	ND		1.0	0.11	ug/L	1
Pyrene	129-00-0	8270D	ND		1.0	0.16	ug/L	1
2,4,5-Trichlorophenol	95-95-4	8270D	ND		1.0	0.18	ug/L	1
2,4,6-Trichlorophenol	88-06-2	8270D	ND		1.0	0.22	ug/L	1

Surrogate	Q	Run 1 % Recovery	Acceptance Limits
2-Fluorobiphenyl		59	37-129
2-Fluorophenol		48	24-127
Nitrobenzene-d5		63	38-127
Phenol-d5		59	28-128
Terphenyl-d14		45	10-148
2,4,6-Tribromophenol		64	41-144

PQL = Practical quantitation limit
B = Detected in the method blank
E = Quantitation of compound exceeded the calibration range
ND = Not detected at or above the MDL
J = Estimated result < PQL and ≥ MDL
P = The RPD between two GC columns exceeds 40%
Where applicable, all soil sample analysis are reported on a dry weight basis unless flagged with a "W"
N = Recovery is out of criteria
H = Out of holding time

Dissolved RCRA Metals

Client: ARCADIS U.S., Inc.
Laboratory ID: MA26019-040
Description: G4MW19 (012711)
Matrix: Aqueous
Date Sampled: 01/27/2011 1355
Date Received: 01/29/2011

Run	Prep Method	Analytical Method	Dilution	Analysis Date	Analyst	Prep Date	Batch
1		7470A	1	02/01/2011 1644	BNW	02/01/2011 1020	51806
1	3005A	6010C	1	02/03/2011 0041	CDF	02/01/2011 1820	51872

Parameter	CAS Number	Analytical Method	Result	Q	PQL	MDL	Units	Run
Dissolved Arsenic	7440-38-2	6010C	0.0078	J	0.010	0.0040	mg/L	1
Dissolved Barium	7440-39-3	6010C	0.057		0.025	0.0075	mg/L	1
Dissolved Cadmium	7440-43-9	6010C	ND		0.0020	0.00060	mg/L	1
Dissolved Chromium	7440-47-3	6010C	ND		0.0050	0.0021	mg/L	1
Dissolved Lead	7439-92-1	6010C	ND		0.010	0.0019	mg/L	1
Dissolved Mercury	7439-97-6	7470A	ND		0.00010	0.000053	mg/L	1
Dissolved Selenium	7782-49-2	6010C	0.0058	J	0.010	0.0026	mg/L	1
Dissolved Silver	7440-22-4	6010C	ND		0.0050	0.00040	mg/L	1

PQL = Practical quantitation limit
B = Detected in the method blank
E = Quantitation of compound exceeded the calibration range
ND = Not detected at or above the MDL
J = Estimated result < PQL and ≥ MDL
P = The RPD between two GC columns exceeds 40%
Where applicable, all soil sample analysis are reported on a dry weight basis unless flagged with a "W"
N = Recovery is out of criteria
H = Out of holding time

RCRA Metals

Client: ARCADIS U.S., Inc.
Laboratory ID: MA26019-040
Description: G4MW19 (012711)
Matrix: Aqueous
Date Sampled: 01/27/2011 1355
Date Received: 01/29/2011

Run	Prep Method	Analytical Method	Dilution	Analysis Date	Analyst	Prep Date	Batch
1		7470A	1	02/01/2011 1641	BNW	02/01/2011 1020	51806
1	3005A	6010C	1	02/03/2011 0037	CDF	02/01/2011 1820	51872

Parameter	CAS Number	Analytical Method	Result	Q	PQL	MDL	Units	Run
Arsenic	7440-38-2	6010C	0.0076	J	0.010	0.0040	mg/L	1
Barium	7440-39-3	6010C	0.057		0.025	0.0075	mg/L	1
Cadmium	7440-43-9	6010C	ND		0.0020	0.00060	mg/L	1
Chromium	7440-47-3	6010C	ND		0.0050	0.0021	mg/L	1
Lead	7439-92-1	6010C	0.016		0.010	0.0019	mg/L	1
Mercury	7439-97-6	7470A	ND		0.00010	0.000053	mg/L	1
Selenium	7782-49-2	6010C	0.0057	J	0.010	0.0026	mg/L	1
Silver	7440-22-4	6010C	ND		0.0050	0.00040	mg/L	1

PQL = Practical quantitation limit
B = Detected in the method blank
E = Quantitation of compound exceeded the calibration range
ND = Not detected at or above the MDL
J = Estimated result < PQL and ≥ MDL
P = The RPD between two GC columns exceeds 40%
Where applicable, all soil sample analysis are reported on a dry weight basis unless flagged with a "W"
N = Recovery is out of criteria
H = Out of holding time

Volatile Organic Compounds by GC/MS

Client: ARCADIS U.S., Inc.
Laboratory ID: MA26019-041
Description: TRIP BLANK
Matrix: Aqueous
Date Sampled: 01/27/2011
Date Received: 01/29/2011

Run	Prep Method	Analytical Method	Dilution	Analysis Date	Analyst	Prep Date	Batch
1	5030B	8260B	1	02/01/2011 1750	DLB		51987

Parameter	CAS Number	Analytical Method	Result	Q	PQL	MDL	Units	Run
Acetone	67-64-1	8260B	ND		20	6.7	ug/L	1
Benzene	71-43-2	8260B	ND		1.0	0.13	ug/L	1
Bromodichloromethane	75-27-4	8260B	ND		1.0	0.33	ug/L	1
Bromoform	75-25-2	8260B	ND		1.0	0.66	ug/L	1
Bromomethane (Methyl bromide)	74-83-9	8260B	ND		2.0	0.80	ug/L	1
2-Butanone (MEK)	78-93-3	8260B	ND		10	2.0	ug/L	1
Carbon disulfide	75-15-0	8260B	ND		1.0	0.097	ug/L	1
Carbon tetrachloride	56-23-5	8260B	ND		1.0	0.14	ug/L	1
Chlorobenzene	108-90-7	8260B	ND		2.0	0.33	ug/L	1
Chloroethane	75-00-3	8260B	ND		2.0	0.47	ug/L	1
Chloroform	67-66-3	8260B	ND		1.0	0.33	ug/L	1
Chloromethane (Methyl chloride)	74-87-3	8260B	ND		1.0	0.35	ug/L	1
Dibromochloromethane	124-48-1	8260B	ND		1.0	0.33	ug/L	1
1,4-Dichlorobenzene	106-46-7	8260B	ND		1.0	0.33	ug/L	1
1,3-Dichlorobenzene	541-73-1	8260B	ND		1.0	0.33	ug/L	1
1,2-Dichlorobenzene	95-50-1	8260B	ND		1.0	0.33	ug/L	1
1,2-Dichloroethane	107-06-2	8260B	ND		1.0	0.15	ug/L	1
1,1-Dichloroethane	75-34-3	8260B	ND		1.0	0.13	ug/L	1
trans-1,2-Dichloroethene	156-60-5	8260B	ND		1.0	0.21	ug/L	1
cis-1,2-Dichloroethene	156-59-2	8260B	ND		1.0	0.12	ug/L	1
1,1-Dichloroethene	75-35-4	8260B	ND		1.0	0.16	ug/L	1
1,2-Dichloropropane	78-87-5	8260B	ND		1.0	0.19	ug/L	1
trans-1,3-Dichloropropene	10061-02-6	8260B	ND		1.0	0.11	ug/L	1
cis-1,3-Dichloropropene	10061-01-5	8260B	ND		1.0	0.092	ug/L	1
Ethylbenzene	100-41-4	8260B	ND		1.0	0.33	ug/L	1
2-Hexanone	591-78-6	8260B	ND		10	0.27	ug/L	1
Methyl tertiary butyl ether (MTBE)	1634-04-4	8260B	ND		1.0	0.40	ug/L	1
4-Methyl-2-pentanone	108-10-1	8260B	ND		10	0.31	ug/L	1
Methylene chloride	75-09-2	8260B	ND		1.0	0.33	ug/L	1
Styrene	100-42-5	8260B	ND		1.0	0.12	ug/L	1
1,1,2,2-Tetrachloroethane	79-34-5	8260B	ND		1.0	0.16	ug/L	1
Tetrachloroethene	127-18-4	8260B	ND		1.0	0.13	ug/L	1
Toluene	108-88-3	8260B	ND		1.0	0.33	ug/L	1
1,2,4-Trichlorobenzene	120-82-1	8260B	ND		1.0	0.51	ug/L	1
1,1,2-Trichloroethane	79-00-5	8260B	ND		1.0	0.21	ug/L	1
1,1,1-Trichloroethane	71-55-6	8260B	ND		1.0	0.074	ug/L	1
Trichloroethene	79-01-6	8260B	ND		1.0	0.18	ug/L	1
Vinyl chloride	75-01-4	8260B	ND		1.0	0.054	ug/L	1
Xylenes (total)	1330-20-7	8260B	ND		1.0	0.33	ug/L	1

PQL = Practical quantitation limit
B = Detected in the method blank
E = Quantitation of compound exceeded the calibration range
ND = Not detected at or above the MDL
J = Estimated result < PQL and ≥ MDL
P = The RPD between two GC columns exceeds 40%
Where applicable, all soil sample analysis are reported on a dry weight basis unless flagged with a "W"
N = Recovery is out of criteria
H = Out of holding time

Volatile Organic Compounds by GC/MS

Client: ARCADIS U.S., Inc.
Laboratory ID: MA26019-041
Description: TRIP BLANK
Matrix: Aqueous
Date Sampled: 01/27/2011
Date Received: 01/29/2011

Surrogate	Q	Run 1 % Recovery	Acceptance Limits
1,2-Dichloroethane-d4		115	70-130
Bromofluorobenzene		112	70-130
Toluene-d8		108	70-130

PQL = Practical quantitation limit
B = Detected in the method blank
E = Quantitation of compound exceeded the calibration range
ND = Not detected at or above the MDL
J = Estimated result < PQL and ≥ MDL
P = The RPD between two GC columns exceeds 40%
Where applicable, all soil sample analysis are reported on a dry weight basis unless flagged with a "W"
N = Recovery is out of criteria
H = Out of holding time

QC Summary

Inorganic non-metals - MB

Sample ID: MQ51443-001
Batch: 51443
Analytical Method: 353.2 REV 2

Matrix: Aqueous

Parameter	Result	Q	Dil	PQL	MDL	Units	Analysis Date
Nitrite - N	ND		1	0.020	0.0034	mg/L	01/27/2011 0908

PQL = Practical quantitation limit
ND = Not detected at or above the MDL
P = The RPD between two GC columns exceeds 40%
J = Estimated result < PQL and ≥ MDL
N - Recovery is out of criteria
+ - RPD is out of criteria

Where applicable, all soil sample analysis are reported on a dry weight basis unless flagged with a "W"

Note: Calculations are performed before rounding to avoid round-off errors in calculated results

Inorganic non-metals - LCS

Sample ID: MQ51443-002
Batch: 51443
Analytical Method: 353.2 REV 2

Matrix: Aqueous

Parameter	Spike Amount (mg/L)	Result (mg/L)	Q	Dil	% Rec	% Rec Limit	Analysis Date
Nitrite - N	0.40	0.40		1	100	90-110	01/27/2011 0910

PQL = Practical quantitation limit
ND = Not detected at or above the MDL
P = The RPD between two GC columns exceeds 40%
J = Estimated result < PQL and ≥ MDL
N - Recovery is out of criteria
+ - RPD is out of criteria

Where applicable, all soil sample analysis are reported on a dry weight basis unless flagged with a "W"

Note: Calculations are performed before rounding to avoid round-off errors in calculated results

Inorganic non-metals - LCSD

Sample ID: MQ51443-003
Batch: 51443
Analytical Method: 353.2 REV 2

Matrix: Aqueous

Parameter	Spike Amount (mg/L)	Result (mg/L)	Q	Dil	% Rec	% RPD	% Rec Limit	% RPD Limit	Analysis Date
Nitrite - N	0.40	0.41		1	102	2.0	90-110	20	01/27/2011 0911

PQL = Practical quantitation limit
ND = Not detected at or above the MDL
P = The RPD between two GC columns exceeds 40%
J = Estimated result < PQL and ≥ MDL
N - Recovery is out of criteria
+ - RPD is out of criteria

Where applicable, all soil sample analysis are reported on a dry weight basis unless flagged with a "W"

Note: Calculations are performed before rounding to avoid round-off errors in calculated results

Inorganic non-metals - MS

Sample ID: MA26019-009MS
Batch: 51443
Analytical Method: 353.2 REV 2

Matrix: Aqueous

Parameter	Sample Amount (mg/L)	Spike Amount (mg/L)	Result (mg/L)	Q	Dil	% Rec	% Rec Limit	Analysis Date
Nitrite - N	0.016	0.40	0.17	N	1	38	70-130	01/27/2011 1037

PQL = Practical quantitation limit
ND = Not detected at or above the MDL
P = The RPD between two GC columns exceeds 40%
J = Estimated result < PQL and ≥ MDL
N - Recovery is out of criteria
+ - RPD is out of criteria

Where applicable, all soil sample analysis are reported on a dry weight basis unless flagged with a "W"

Note: Calculations are performed before rounding to avoid round-off errors in calculated results

Inorganic non-metals - MSD

Sample ID: MA26019-009MD
Batch: 51443
Analytical Method: 353.2 REV 2

Matrix: Aqueous

Parameter	Sample Amount (mg/L)	Spike Amount (mg/L)	Result (mg/L)	Q	Dil	% Rec	% RPD	% Rec Limit	% RPD Limit	Analysis Date
Nitrite - N	0.016	0.40	0.20	N	1	47	18	70-130	20	01/27/2011 1038

PQL = Practical quantitation limit
ND = Not detected at or above the MDL
P = The RPD between two GC columns exceeds 40%
J = Estimated result < PQL and ≥ MDL
N - Recovery is out of criteria
+ - RPD is out of criteria

Where applicable, all soil sample analysis are reported on a dry weight basis unless flagged with a "W"

Note: Calculations are performed before rounding to avoid round-off errors in calculated results

Inorganic non-metals - MB

Sample ID: MQ51519-001
Batch: 51519
Analytical Method: 353.2

Matrix: Aqueous

Parameter	Result	Q	Dil	PQL	MDL	Units	Analysis Date
Nitrate - N	ND		1	0.020	0.0013	mg/L	01/27/2011 0908

PQL = Practical quantitation limit
ND = Not detected at or above the MDL
P = The RPD between two GC columns exceeds 40%
J = Estimated result < PQL and ≥ MDL
N - Recovery is out of criteria
+ - RPD is out of criteria

Where applicable, all soil sample analysis are reported on a dry weight basis unless flagged with a "W"

Note: Calculations are performed before rounding to avoid round-off errors in calculated results

Inorganic non-metals - LCS

Sample ID: MQ51519-002
Batch: 51519
Analytical Method: 353.2

Matrix: Aqueous

Parameter	Spike Amount (mg/L)	Result (mg/L)	Q	Dil	% Rec	% Rec Limit	Analysis Date
Nitrate - N	0.80	0.85		1	107	90-110	01/27/2011 0910

PQL = Practical quantitation limit
ND = Not detected at or above the MDL
P = The RPD between two GC columns exceeds 40%
J = Estimated result < PQL and ≥ MDL
N - Recovery is out of criteria
+ - RPD is out of criteria

Where applicable, all soil sample analysis are reported on a dry weight basis unless flagged with a "W"

Note: Calculations are performed before rounding to avoid round-off errors in calculated results

Inorganic non-metals - LCSD

Sample ID: MQ51519-003
Batch: 51519
Analytical Method: 353.2

Matrix: Aqueous

Parameter	Spike Amount (mg/L)	Result (mg/L)	Q	Dil	% Rec	% RPD	% Rec Limit	% RPD Limit	Analysis Date
Nitrate - N	0.80	0.86		1	108	1.0	90-110	20	01/27/2011 0911

PQL = Practical quantitation limit
ND = Not detected at or above the MDL
P = The RPD between two GC columns exceeds 40%
J = Estimated result < PQL and ≥ MDL
N - Recovery is out of criteria
+ - RPD is out of criteria

Where applicable, all soil sample analysis are reported on a dry weight basis unless flagged with a "W"

Note: Calculations are performed before rounding to avoid round-off errors in calculated results

Inorganic non-metals - MS

Sample ID: MA26019-009MS
Batch: 51519
Analytical Method: 353.2

Matrix: Aqueous

Parameter	Sample Amount (mg/L)	Spike Amount (mg/L)	Result (mg/L)	Q	Dil	% Rec	% Rec Limit	Analysis Date
Nitrate - N	ND	0.80	0.38	N	1	48	90-110	01/27/2011 1037

PQL = Practical quantitation limit
ND = Not detected at or above the MDL
P = The RPD between two GC columns exceeds 40%
J = Estimated result < PQL and ≥ MDL
N - Recovery is out of criteria
+ - RPD is out of criteria

Where applicable, all soil sample analysis are reported on a dry weight basis unless flagged with a "W"

Note: Calculations are performed before rounding to avoid round-off errors in calculated results

Inorganic non-metals - MSD

Sample ID: MA26019-009MD
Batch: 51519
Analytical Method: 353.2

Matrix: Aqueous

Parameter	Sample Amount (mg/L)	Spike Amount (mg/L)	Result (mg/L)	Q	Dil	% Rec	% RPD	% Rec Limit	% RPD Limit	Analysis Date
Nitrate - N	ND	0.80	0.12	N,+	1	15	110	90-110	20	01/27/2011 1038

PQL = Practical quantitation limit
ND = Not detected at or above the MDL
P = The RPD between two GC columns exceeds 40%
J = Estimated result < PQL and ≥ MDL
N - Recovery is out of criteria
+ - RPD is out of criteria

Where applicable, all soil sample analysis are reported on a dry weight basis unless flagged with a "W"

Note: Calculations are performed before rounding to avoid round-off errors in calculated results

Inorganic non-metals - MB

Sample ID: MQ51679-001
Batch: 51679
Analytical Method: 353.2

Matrix: Aqueous

Parameter	Result	Q	Dil	PQL	MDL	Units	Analysis Date
Nitrate - N	ND		1	0.020	0.0013	mg/L	01/29/2011 1505

PQL = Practical quantitation limit
ND = Not detected at or above the MDL
P = The RPD between two GC columns exceeds 40%
J = Estimated result < PQL and ≥ MDL
N - Recovery is out of criteria
+ - RPD is out of criteria

Where applicable, all soil sample analysis are reported on a dry weight basis unless flagged with a "W"

Note: Calculations are performed before rounding to avoid round-off errors in calculated results

Inorganic non-metals - LCS

Sample ID: MQ51679-002
Batch: 51679
Analytical Method: 353.2

Matrix: Aqueous

Parameter	Spike Amount (mg/L)	Result (mg/L)	Q	Dil	% Rec	% Rec Limit	Analysis Date
Nitrate - N	0.80	0.82		1	103	90-110	01/29/2011 1506

PQL = Practical quantitation limit
ND = Not detected at or above the MDL
P = The RPD between two GC columns exceeds 40%
J = Estimated result < PQL and ≥ MDL
N - Recovery is out of criteria
+ - RPD is out of criteria

Where applicable, all soil sample analysis are reported on a dry weight basis unless flagged with a "W"

Note: Calculations are performed before rounding to avoid round-off errors in calculated results

Inorganic non-metals - LCSD

Sample ID: MQ51679-003
Batch: 51679
Analytical Method: 353.2

Matrix: Aqueous

Parameter	Spike Amount (mg/L)	Result (mg/L)	Q	Dil	% Rec	% RPD	% Rec Limit	% RPD Limit	Analysis Date
Nitrate - N	0.80	0.88		1	110	6.5	90-110	20	01/29/2011 1507

PQL = Practical quantitation limit
ND = Not detected at or above the MDL
P = The RPD between two GC columns exceeds 40%
J = Estimated result < PQL and ≥ MDL
N - Recovery is out of criteria
+ - RPD is out of criteria

Where applicable, all soil sample analysis are reported on a dry weight basis unless flagged with a "W"

Note: Calculations are performed before rounding to avoid round-off errors in calculated results

Inorganic non-metals - MS

Sample ID: MA26019-026MS
Batch: 51679
Analytical Method: 353.2

Matrix: Aqueous

Parameter	Sample Amount (mg/L)	Spike Amount (mg/L)	Result (mg/L)	Q	Dil	% Rec	% Rec Limit	Analysis Date
Nitrate - N	0.34	0.80	0.57	N	1	29	90-110	01/29/2011 1526

PQL = Practical quantitation limit
ND = Not detected at or above the MDL
P = The RPD between two GC columns exceeds 40%
J = Estimated result < PQL and ≥ MDL
N - Recovery is out of criteria
+ - RPD is out of criteria

Where applicable, all soil sample analysis are reported on a dry weight basis unless flagged with a "W"

Note: Calculations are performed before rounding to avoid round-off errors in calculated results

Inorganic non-metals - MSD

Sample ID: MA26019-026MD
Batch: 51679
Analytical Method: 353.2

Matrix: Aqueous

Parameter	Sample Amount (mg/L)	Spike Amount (mg/L)	Result (mg/L)	Q	Dil	% Rec	% RPD	% Rec Limit	% RPD Limit	Analysis Date
Nitrate - N	0.34	0.80	0.69	N	1	43	19	90-110	20	01/29/2011 1527

PQL = Practical quantitation limit
ND = Not detected at or above the MDL
P = The RPD between two GC columns exceeds 40%
J = Estimated result < PQL and ≥ MDL
N - Recovery is out of criteria
+ - RPD is out of criteria

Where applicable, all soil sample analysis are reported on a dry weight basis unless flagged with a "W"

Note: Calculations are performed before rounding to avoid round-off errors in calculated results

Inorganic non-metals - MB

Sample ID: MQ51698-001
Batch: 51698
Analytical Method: SM 2320B

Matrix: Aqueous

Parameter	Result	Q	Dil	PQL	MDL	Units	Analysis Date
Alkalinity	ND		1	10	3.9	mg/L	01/28/2011 1704

PQL = Practical quantitation limit
ND = Not detected at or above the MDL
P = The RPD between two GC columns exceeds 40%
J = Estimated result < PQL and ≥ MDL
N - Recovery is out of criteria
+ - RPD is out of criteria

Where applicable, all soil sample analysis are reported on a dry weight basis unless flagged with a "W"

Note: Calculations are performed before rounding to avoid round-off errors in calculated results

Inorganic non-metals - LCS

Sample ID: MQ51698-002
Batch: 51698
Analytical Method: SM 2320B

Matrix: Aqueous

Parameter	Spike Amount (mg/L)	Result (mg/L)	Q	Dil	% Rec	% Rec Limit	Analysis Date
Alkalinity	100	100		1	102	90-110	01/28/2011 1704

PQL = Practical quantitation limit
ND = Not detected at or above the MDL
P = The RPD between two GC columns exceeds 40%
J = Estimated result < PQL and ≥ MDL
N - Recovery is out of criteria
+ - RPD is out of criteria

Where applicable, all soil sample analysis are reported on a dry weight basis unless flagged with a "W"

Note: Calculations are performed before rounding to avoid round-off errors in calculated results

Inorganic non-metals - LCSD

Sample ID: MQ51698-003
Batch: 51698
Analytical Method: SM 2320B

Matrix: Aqueous

Parameter	Spike Amount (mg/L)	Result (mg/L)	Q	Dil	% Rec	% RPD	% Rec Limit	% RPD Limit	Analysis Date
Alkalinity	100	100		1	103	1.2	90-110	20	01/28/2011 1704

PQL = Practical quantitation limit
ND = Not detected at or above the MDL
P = The RPD between two GC columns exceeds 40%
J = Estimated result < PQL and ≥ MDL
N - Recovery is out of criteria
+ - RPD is out of criteria

Where applicable, all soil sample analysis are reported on a dry weight basis unless flagged with a "W"

Note: Calculations are performed before rounding to avoid round-off errors in calculated results

Inorganic non-metals - MS

Sample ID: MA26019-010MS
Batch: 51698
Analytical Method: SM 2320B

Matrix: Aqueous

Parameter	Sample Amount (mg/L)	Spike Amount (mg/L)	Result (mg/L)	Q	Dil	% Rec	% Rec Limit	Analysis Date
Alkalinity	ND	100	70		1	70	70-130	01/28/2011 1704

PQL = Practical quantitation limit
ND = Not detected at or above the MDL
P = The RPD between two GC columns exceeds 40%
J = Estimated result < PQL and ≥ MDL
N - Recovery is out of criteria
+ - RPD is out of criteria

Where applicable, all soil sample analysis are reported on a dry weight basis unless flagged with a "W"

Note: Calculations are performed before rounding to avoid round-off errors in calculated results

Inorganic non-metals - MSD

Sample ID: MA26019-010MD
Batch: 51698
Analytical Method: SM 2320B

Matrix: Aqueous

Parameter	Sample Amount (mg/L)	Spike Amount (mg/L)	Result (mg/L)	Q	Dil	% Rec	% RPD	% Rec Limit	% RPD Limit	Analysis Date
Alkalinity	ND	100	74		1	74	5.4	70-130	20	01/28/2011 1704

PQL = Practical quantitation limit
ND = Not detected at or above the MDL
P = The RPD between two GC columns exceeds 40%
J = Estimated result < PQL and ≥ MDL
N - Recovery is out of criteria
+ - RPD is out of criteria

Where applicable, all soil sample analysis are reported on a dry weight basis unless flagged with a "W"

Note: Calculations are performed before rounding to avoid round-off errors in calculated results

Inorganic non-metals - MB

Sample ID: MQ51722-001
Batch: 51722
Analytical Method: 300.0

Matrix: Aqueous

Parameter	Result	Q	Dil	PQL	MDL	Units	Analysis Date
Sulfate	ND		1	1.0	0.28	mg/L	01/28/2011 1523

PQL = Practical quantitation limit
ND = Not detected at or above the MDL
P = The RPD between two GC columns exceeds 40%
J = Estimated result < PQL and ≥ MDL
N - Recovery is out of criteria
+ - RPD is out of criteria

Where applicable, all soil sample analysis are reported on a dry weight basis unless flagged with a "W"

Note: Calculations are performed before rounding to avoid round-off errors in calculated results

Inorganic non-metals - LCS

Sample ID: MQ51722-002
Batch: 51722
Analytical Method: 300.0

Matrix: Aqueous

Parameter	Spike Amount (mg/L)	Result (mg/L)	Q	Dil	% Rec	% Rec Limit	Analysis Date
Sulfate	20	18		1	92	90-110	01/28/2011 1545

PQL = Practical quantitation limit
ND = Not detected at or above the MDL
P = The RPD between two GC columns exceeds 40%
J = Estimated result < PQL and ≥ MDL
N - Recovery is out of criteria
+ - RPD is out of criteria

Where applicable, all soil sample analysis are reported on a dry weight basis unless flagged with a "W"

Note: Calculations are performed before rounding to avoid round-off errors in calculated results

Inorganic non-metals - LCSD

Sample ID: MQ51722-003
Batch: 51722
Analytical Method: 300.0

Matrix: Aqueous

Parameter	Spike Amount (mg/L)	Result (mg/L)	Q	Dil	% Rec	% RPD	% Rec Limit	% RPD Limit	Analysis Date
Sulfate	20	18		1	91	1.3	90-110	20	01/28/2011 1607

PQL = Practical quantitation limit
ND = Not detected at or above the MDL
P = The RPD between two GC columns exceeds 40%
J = Estimated result < PQL and ≥ MDL
N - Recovery is out of criteria
+ - RPD is out of criteria

Where applicable, all soil sample analysis are reported on a dry weight basis unless flagged with a "W"

Note: Calculations are performed before rounding to avoid round-off errors in calculated results

Inorganic non-metals - MB

Sample ID: MQ51732-001
Batch: 51732
Analytical Method: 300.0

Matrix: Aqueous

Parameter	Result	Q	Dil	PQL	MDL	Units	Analysis Date
Chloride	ND		1	1.0	0.11	mg/L	01/28/2011 1523

PQL = Practical quantitation limit
ND = Not detected at or above the MDL
P = The RPD between two GC columns exceeds 40%
J = Estimated result < PQL and ≥ MDL
N - Recovery is out of criteria
+ - RPD is out of criteria

Where applicable, all soil sample analysis are reported on a dry weight basis unless flagged with a "W"

Note: Calculations are performed before rounding to avoid round-off errors in calculated results

Inorganic non-metals - LCS

Sample ID: MQ51732-002
Batch: 51732
Analytical Method: 300.0

Matrix: Aqueous

Parameter	Spike Amount (mg/L)	Result (mg/L)	Q	Dil	% Rec	% Rec Limit	Analysis Date
Chloride	20	20		1	98	90-110	01/28/2011 1545

PQL = Practical quantitation limit
ND = Not detected at or above the MDL
P = The RPD between two GC columns exceeds 40%
J = Estimated result < PQL and ≥ MDL
N - Recovery is out of criteria
+ - RPD is out of criteria

Where applicable, all soil sample analysis are reported on a dry weight basis unless flagged with a "W"

Note: Calculations are performed before rounding to avoid round-off errors in calculated results

Inorganic non-metals - LCSD

Sample ID: MQ51732-003
Batch: 51732
Analytical Method: 300.0

Matrix: Aqueous

Parameter	Spike Amount (mg/L)	Result (mg/L)	Q	Dil	% Rec	% RPD	% Rec Limit	% RPD Limit	Analysis Date
Chloride	20	20		1	99	0.31	90-110	20	01/28/2011 1607

PQL = Practical quantitation limit
ND = Not detected at or above the MDL
P = The RPD between two GC columns exceeds 40%
J = Estimated result < PQL and ≥ MDL
N - Recovery is out of criteria
+ - RPD is out of criteria

Where applicable, all soil sample analysis are reported on a dry weight basis unless flagged with a "W"

Note: Calculations are performed before rounding to avoid round-off errors in calculated results

Inorganic non-metals - MS

Sample ID: MA26019-010MS
Batch: 51732
Analytical Method: 300.0

Matrix: Aqueous

Parameter	Sample Amount (mg/L)	Spike Amount (mg/L)	Result (mg/L)	Q	Dil	% Rec	% Rec Limit	Analysis Date
Chloride	4.0	20	26		1	108	90-110	01/28/2011 2121

PQL = Practical quantitation limit
ND = Not detected at or above the MDL
P = The RPD between two GC columns exceeds 40%
J = Estimated result < PQL and ≥ MDL
N - Recovery is out of criteria
+ - RPD is out of criteria

Where applicable, all soil sample analysis are reported on a dry weight basis unless flagged with a "W"

Note: Calculations are performed before rounding to avoid round-off errors in calculated results

Inorganic non-metals - MSD

Sample ID: MA26019-010MD
Batch: 51732
Analytical Method: 300.0

Matrix: Aqueous

Parameter	Sample Amount (mg/L)	Spike Amount (mg/L)	Result (mg/L)	Q	Dil	% Rec	% RPD	% Rec Limit	% RPD Limit	Analysis Date
Chloride	4.0	20	25		1	106	1.5	90-110	20	01/28/2011 2143

PQL = Practical quantitation limit
ND = Not detected at or above the MDL
P = The RPD between two GC columns exceeds 40%
J = Estimated result < PQL and ≥ MDL
N - Recovery is out of criteria
+ - RPD is out of criteria

Where applicable, all soil sample analysis are reported on a dry weight basis unless flagged with a "W"

Note: Calculations are performed before rounding to avoid round-off errors in calculated results

Inorganic non-metals - MB

Sample ID: MQ51813-001
Batch: 51813
Analytical Method: 353.2 REV 2

Matrix: Aqueous

Parameter	Result	Q	Dil	PQL	MDL	Units	Analysis Date
Nitrite - N	ND		1	0.020	0.0034	mg/L	01/29/2011 1505

PQL = Practical quantitation limit
ND = Not detected at or above the MDL
P = The RPD between two GC columns exceeds 40%
J = Estimated result < PQL and ≥ MDL
N - Recovery is out of criteria
+ - RPD is out of criteria

Where applicable, all soil sample analysis are reported on a dry weight basis unless flagged with a "W"

Note: Calculations are performed before rounding to avoid round-off errors in calculated results

Inorganic non-metals - LCS

Sample ID: MQ51813-002
Batch: 51813
Analytical Method: 353.2 REV 2

Matrix: Aqueous

Parameter	Spike Amount (mg/L)	Result (mg/L)	Q	Dil	% Rec	% Rec Limit	Analysis Date
Nitrite - N	0.40	0.40		1	101	90-110	01/29/2011 1506

PQL = Practical quantitation limit
ND = Not detected at or above the MDL
P = The RPD between two GC columns exceeds 40%
J = Estimated result < PQL and ≥ MDL
N - Recovery is out of criteria
+ - RPD is out of criteria

Where applicable, all soil sample analysis are reported on a dry weight basis unless flagged with a "W"

Note: Calculations are performed before rounding to avoid round-off errors in calculated results

Inorganic non-metals - LCSD

Sample ID: MQ51813-003
Batch: 51813
Analytical Method: 353.2 REV 2

Matrix: Aqueous

Parameter	Spike Amount (mg/L)	Result (mg/L)	Q	Dil	% Rec	% RPD	% Rec Limit	% RPD Limit	Analysis Date
Nitrite - N	0.40	0.43		1	108	6.5	90-110	20	01/29/2011 1507

PQL = Practical quantitation limit
ND = Not detected at or above the MDL
P = The RPD between two GC columns exceeds 40%
J = Estimated result < PQL and ≥ MDL
N - Recovery is out of criteria
+ - RPD is out of criteria

Where applicable, all soil sample analysis are reported on a dry weight basis unless flagged with a "W"

Note: Calculations are performed before rounding to avoid round-off errors in calculated results

Inorganic non-metals - MS

Sample ID: MA26019-026MS
Batch: 51813
Analytical Method: 353.2 REV 2

Matrix: Aqueous

Parameter	Sample Amount (mg/L)	Spike Amount (mg/L)	Result (mg/L)	Q	Dil	% Rec	% Rec Limit	Analysis Date
Nitrite - N	ND	0.40	0.20	N	1	51	70-130	01/29/2011 1526

PQL = Practical quantitation limit
ND = Not detected at or above the MDL
P = The RPD between two GC columns exceeds 40%
J = Estimated result < PQL and ≥ MDL
N - Recovery is out of criteria
+ - RPD is out of criteria

Where applicable, all soil sample analysis are reported on a dry weight basis unless flagged with a "W"

Note: Calculations are performed before rounding to avoid round-off errors in calculated results

Inorganic non-metals - MSD

Sample ID: MA26019-026MD
Batch: 51813
Analytical Method: 353.2 REV 2

Matrix: Aqueous

Parameter	Sample Amount (mg/L)	Spike Amount (mg/L)	Result (mg/L)	Q	Dil	% Rec	% RPD	% Rec Limit	% RPD Limit	Analysis Date
Nitrite - N	ND	0.40	0.22	N	1	55	7.1	70-130	20	01/29/2011 1527

PQL = Practical quantitation limit
ND = Not detected at or above the MDL
P = The RPD between two GC columns exceeds 40%
J = Estimated result < PQL and ≥ MDL
N - Recovery is out of criteria
+ - RPD is out of criteria

Where applicable, all soil sample analysis are reported on a dry weight basis unless flagged with a "W"

Note: Calculations are performed before rounding to avoid round-off errors in calculated results

Inorganic non-metals - MB

Sample ID: MQ51825-001
Batch: 51825
Analytical Method: SM 2320B

Matrix: Aqueous

Parameter	Result	Q	Dil	PQL	MDL	Units	Analysis Date
Alkalinity	ND		1	10	3.9	mg/L	01/31/2011 1641

PQL = Practical quantitation limit
ND = Not detected at or above the MDL
P = The RPD between two GC columns exceeds 40%
J = Estimated result < PQL and ≥ MDL
N - Recovery is out of criteria
+ - RPD is out of criteria

Where applicable, all soil sample analysis are reported on a dry weight basis unless flagged with a "W"

Note: Calculations are performed before rounding to avoid round-off errors in calculated results

Inorganic non-metals - LCS

Sample ID: MQ51825-002
Batch: 51825
Analytical Method: SM 2320B

Matrix: Aqueous

Parameter	Spike Amount (mg/L)	Result (mg/L)	Q	Dil	% Rec	% Rec Limit	Analysis Date
Alkalinity	100	110		1	108	90-110	01/31/2011 1656

PQL = Practical quantitation limit
ND = Not detected at or above the MDL
P = The RPD between two GC columns exceeds 40%
J = Estimated result < PQL and ≥ MDL
N - Recovery is out of criteria
+ - RPD is out of criteria

Where applicable, all soil sample analysis are reported on a dry weight basis unless flagged with a "W"

Note: Calculations are performed before rounding to avoid round-off errors in calculated results

Inorganic non-metals - LCSD

Sample ID: MQ51825-003
Batch: 51825
Analytical Method: SM 2320B

Matrix: Aqueous

Parameter	Spike Amount (mg/L)	Result (mg/L)	Q	Dil	% Rec	% RPD	% Rec Limit	% RPD Limit	Analysis Date
Alkalinity	100	110		1	110	1.4	90-110	20	01/31/2011 1710

PQL = Practical quantitation limit
ND = Not detected at or above the MDL
P = The RPD between two GC columns exceeds 40%
J = Estimated result < PQL and ≥ MDL
N - Recovery is out of criteria
+ - RPD is out of criteria

Where applicable, all soil sample analysis are reported on a dry weight basis unless flagged with a "W"

Note: Calculations are performed before rounding to avoid round-off errors in calculated results

Inorganic non-metals - MS

Sample ID: MA26019-026MS
Batch: 51825
Analytical Method: SM 2320B

Matrix: Aqueous

Parameter	Sample Amount (mg/L)	Spike Amount (mg/L)	Result (mg/L)	Q	Dil	% Rec	% Rec Limit	Analysis Date
Alkalinity	ND	100	100		1	103	70-130	01/31/2011 1728

PQL = Practical quantitation limit
ND = Not detected at or above the MDL
P = The RPD between two GC columns exceeds 40%
J = Estimated result < PQL and ≥ MDL
N - Recovery is out of criteria
+ - RPD is out of criteria

Where applicable, all soil sample analysis are reported on a dry weight basis unless flagged with a "W"

Note: Calculations are performed before rounding to avoid round-off errors in calculated results

Inorganic non-metals - MSD

Sample ID: MA26019-026MD
Batch: 51825
Analytical Method: SM 2320B

Matrix: Aqueous

Parameter	Sample Amount (mg/L)	Spike Amount (mg/L)	Result (mg/L)	Q	Dil	% Rec	% RPD	% Rec Limit	% RPD Limit	Analysis Date
Alkalinity	ND	100	110		1	105	2.1	70-130	20	01/31/2011 1738

PQL = Practical quantitation limit
ND = Not detected at or above the MDL
P = The RPD between two GC columns exceeds 40%
J = Estimated result < PQL and ≥ MDL
N - Recovery is out of criteria
+ - RPD is out of criteria

Where applicable, all soil sample analysis are reported on a dry weight basis unless flagged with a "W"

Note: Calculations are performed before rounding to avoid round-off errors in calculated results

Inorganic non-metals - MB

Sample ID: MQ52108-001
Batch: 52108
Analytical Method: 5310D

Matrix: Aqueous

Parameter	Result	Q	Dil	PQL	MDL	Units	Analysis Date
TOC	ND		1	1.0	0.063	mg/L	02/04/2011 0110

PQL = Practical quantitation limit
ND = Not detected at or above the MDL
P = The RPD between two GC columns exceeds 40%
J = Estimated result < PQL and ≥ MDL
N - Recovery is out of criteria
+ - RPD is out of criteria

Where applicable, all soil sample analysis are reported on a dry weight basis unless flagged with a "W"

Note: Calculations are performed before rounding to avoid round-off errors in calculated results

Inorganic non-metals - LCS

Sample ID: MQ52108-002
Batch: 52108
Analytical Method: 5310D

Matrix: Aqueous

Parameter	Spike Amount (mg/L)	Result (mg/L)	Q	Dil	% Rec	% Rec Limit	Analysis Date
TOC	20	20		1	98	90-110	02/04/2011 0110

PQL = Practical quantitation limit
ND = Not detected at or above the MDL
P = The RPD between two GC columns exceeds 40%
J = Estimated result < PQL and ≥ MDL
N - Recovery is out of criteria
+ - RPD is out of criteria

Where applicable, all soil sample analysis are reported on a dry weight basis unless flagged with a "W"

Note: Calculations are performed before rounding to avoid round-off errors in calculated results

Inorganic non-metals - LCSD

Sample ID: MQ52108-003
Batch: 52108
Analytical Method: 5310D

Matrix: Aqueous

Parameter	Spike Amount (mg/L)	Result (mg/L)	Q	Dil	% Rec	% RPD	% Rec Limit	% RPD Limit	Analysis Date
TOC	20	20		1	98	0.35	90-110	20	02/04/2011 0110

PQL = Practical quantitation limit
ND = Not detected at or above the MDL
P = The RPD between two GC columns exceeds 40%
J = Estimated result < PQL and ≥ MDL
N - Recovery is out of criteria
+ - RPD is out of criteria

Where applicable, all soil sample analysis are reported on a dry weight basis unless flagged with a "W"

Note: Calculations are performed before rounding to avoid round-off errors in calculated results

Inorganic non-metals - MS

Sample ID: MA26019-009MS
Batch: 52108
Analytical Method: 5310D

Matrix: Aqueous

Parameter	Sample Amount (mg/L)	Spike Amount (mg/L)	Result (mg/L)	Q	Dil	% Rec	% Rec Limit	Analysis Date
TOC	3.3	20	24		1	103	70-130	02/04/2011 0429

PQL = Practical quantitation limit
ND = Not detected at or above the MDL
P = The RPD between two GC columns exceeds 40%
J = Estimated result < PQL and ≥ MDL
N - Recovery is out of criteria
+ - RPD is out of criteria

Where applicable, all soil sample analysis are reported on a dry weight basis unless flagged with a "W"

Note: Calculations are performed before rounding to avoid round-off errors in calculated results

Inorganic non-metals - MSD

Sample ID: MA26019-009MD
Batch: 52108
Analytical Method: 5310D

Matrix: Aqueous

Parameter	Sample Amount (mg/L)	Spike Amount (mg/L)	Result (mg/L)	Q	Dil	% Rec	% RPD	% Rec Limit	% RPD Limit	Analysis Date
TOC	3.3	20	24		1	102	0.95	70-130	20	02/04/2011 0448

PQL = Practical quantitation limit
ND = Not detected at or above the MDL
P = The RPD between two GC columns exceeds 40%
J = Estimated result < PQL and ≥ MDL
N - Recovery is out of criteria
+ - RPD is out of criteria

Where applicable, all soil sample analysis are reported on a dry weight basis unless flagged with a "W"

Note: Calculations are performed before rounding to avoid round-off errors in calculated results

Inorganic non-metals - MB

Sample ID: MQ52134-001
Batch: 52134
Analytical Method: 300.0

Matrix: Aqueous

Parameter	Result	Q	Dil	PQL	MDL	Units	Analysis Date
Chloride	ND		1	1.0	0.11	mg/L	02/03/2011 1837

PQL = Practical quantitation limit
ND = Not detected at or above the MDL
P = The RPD between two GC columns exceeds 40%
J = Estimated result < PQL and ≥ MDL
N - Recovery is out of criteria
+ - RPD is out of criteria

Where applicable, all soil sample analysis are reported on a dry weight basis unless flagged with a "W"

Note: Calculations are performed before rounding to avoid round-off errors in calculated results

Inorganic non-metals - LCS

Sample ID: MQ52134-002
Batch: 52134
Analytical Method: 300.0

Matrix: Aqueous

Parameter	Spike Amount (mg/L)	Result (mg/L)	Q	Dil	% Rec	% Rec Limit	Analysis Date
Chloride	20	20		1	99	90-110	02/03/2011 1859

PQL = Practical quantitation limit
ND = Not detected at or above the MDL
P = The RPD between two GC columns exceeds 40%
J = Estimated result < PQL and ≥ MDL
N - Recovery is out of criteria
+ - RPD is out of criteria

Where applicable, all soil sample analysis are reported on a dry weight basis unless flagged with a "W"

Note: Calculations are performed before rounding to avoid round-off errors in calculated results

Inorganic non-metals - LCSD

Sample ID: MQ52134-003
Batch: 52134
Analytical Method: 300.0

Matrix: Aqueous

Parameter	Spike Amount (mg/L)	Result (mg/L)	Q	Dil	% Rec	% RPD	% Rec Limit	% RPD Limit	Analysis Date
Chloride	20	20		1	99	0.36	90-110	20	02/03/2011 1921

PQL = Practical quantitation limit
ND = Not detected at or above the MDL
P = The RPD between two GC columns exceeds 40%
J = Estimated result < PQL and ≥ MDL
N - Recovery is out of criteria
+ - RPD is out of criteria

Where applicable, all soil sample analysis are reported on a dry weight basis unless flagged with a "W"

Note: Calculations are performed before rounding to avoid round-off errors in calculated results

Inorganic non-metals - Duplicate

Sample ID: MA26019-026DU
Batch: 52134
Analytical Method: 300.0

Matrix: Aqueous

Parameter	Sample Amount (mg/L)	Result (mg/L)	Q	Dil	% RPD	% RPD Limit	Analysis Date
Chloride	5.2	5.4		1	3.5	20	02/04/2011 0504

PQL = Practical quantitation limit
ND = Not detected at or above the MDL
P = The RPD between two GC columns exceeds 40%
J = Estimated result < PQL and ≥ MDL
N - Recovery is out of criteria
+ - RPD is out of criteria

Where applicable, all soil sample analysis are reported on a dry weight basis unless flagged with a "W"

Note: Calculations are performed before rounding to avoid round-off errors in calculated results

Inorganic non-metals - MB

Sample ID: MQ52138-001
Batch: 52138
Analytical Method: 300.0

Matrix: Aqueous

Parameter	Result	Q	Dil	PQL	MDL	Units	Analysis Date
Sulfate	ND		1	1.0	0.28	mg/L	02/03/2011 1837

PQL = Practical quantitation limit
ND = Not detected at or above the MDL
P = The RPD between two GC columns exceeds 40%
J = Estimated result < PQL and ≥ MDL
N - Recovery is out of criteria
+ - RPD is out of criteria

Where applicable, all soil sample analysis are reported on a dry weight basis unless flagged with a "W"

Note: Calculations are performed before rounding to avoid round-off errors in calculated results

Inorganic non-metals - LCS

Sample ID: MQ52138-002
Batch: 52138
Analytical Method: 300.0

Matrix: Aqueous

Parameter	Spike Amount (mg/L)	Result (mg/L)	Q	Dil	% Rec	% Rec Limit	Analysis Date
Sulfate	20	19		1	94	90-110	02/03/2011 1859

PQL = Practical quantitation limit
ND = Not detected at or above the MDL
P = The RPD between two GC columns exceeds 40%
J = Estimated result < PQL and ≥ MDL
N - Recovery is out of criteria
+ - RPD is out of criteria

Where applicable, all soil sample analysis are reported on a dry weight basis unless flagged with a "W"

Note: Calculations are performed before rounding to avoid round-off errors in calculated results

Inorganic non-metals - LCSD

Sample ID: MQ52138-003
Batch: 52138
Analytical Method: 300.0

Matrix: Aqueous

Parameter	Spike Amount (mg/L)	Result (mg/L)	Q	Dil	% Rec	% RPD	% Rec Limit	% RPD Limit	Analysis Date
Sulfate	20	18		1	92	2.0	90-110	20	02/03/2011 1921

PQL = Practical quantitation limit
ND = Not detected at or above the MDL
P = The RPD between two GC columns exceeds 40%
J = Estimated result < PQL and ≥ MDL
N - Recovery is out of criteria
+ - RPD is out of criteria

Where applicable, all soil sample analysis are reported on a dry weight basis unless flagged with a "W"

Note: Calculations are performed before rounding to avoid round-off errors in calculated results

Inorganic non-metals - Duplicate

Sample ID: MA26019-026DU
Batch: 52138
Analytical Method: 300.0

Matrix: Aqueous

Parameter	Sample Amount (mg/L)	Result (mg/L)	Q	Dil	% RPD	% RPD Limit	Analysis Date
Sulfate	140	130		5	7.2	20	02/04/2011 1007

PQL = Practical quantitation limit
ND = Not detected at or above the MDL
P = The RPD between two GC columns exceeds 40%
J = Estimated result < PQL and ≥ MDL
N - Recovery is out of criteria
+ - RPD is out of criteria

Where applicable, all soil sample analysis are reported on a dry weight basis unless flagged with a "W"

Note: Calculations are performed before rounding to avoid round-off errors in calculated results

Volatile Organic Compounds by GC/MS - MB

Sample ID: MQ51631-001
Batch: 51631
Analytical Method: 8260B

Matrix: Aqueous
Prep Method: 5030B

Parameter	Result	Q	Dil	PQL	MDL	Units	Analysis Date
Acetone	ND		1	20	6.7	ug/L	01/27/2011 2321
Benzene	ND		1	1.0	0.13	ug/L	01/27/2011 2321
Bromodichloromethane	ND		1	1.0	0.33	ug/L	01/27/2011 2321
Bromoform	ND		1	1.0	0.66	ug/L	01/27/2011 2321
Bromomethane (Methyl bromide)	ND		1	2.0	0.80	ug/L	01/27/2011 2321
2-Butanone (MEK)	ND		1	10	2.0	ug/L	01/27/2011 2321
Carbon disulfide	ND		1	1.0	0.097	ug/L	01/27/2011 2321
Carbon tetrachloride	ND		1	1.0	0.14	ug/L	01/27/2011 2321
Chlorobenzene	ND		1	2.0	0.33	ug/L	01/27/2011 2321
Chloroethane	ND		1	2.0	0.47	ug/L	01/27/2011 2321
Chloroform	ND		1	1.0	0.33	ug/L	01/27/2011 2321
Chloromethane (Methyl chloride)	ND		1	1.0	0.35	ug/L	01/27/2011 2321
Dibromochloromethane	ND		1	1.0	0.33	ug/L	01/27/2011 2321
1,2-Dichlorobenzene	ND		1	1.0	0.33	ug/L	01/27/2011 2321
1,3-Dichlorobenzene	ND		1	1.0	0.33	ug/L	01/27/2011 2321
1,4-Dichlorobenzene	ND		1	1.0	0.33	ug/L	01/27/2011 2321
1,1-Dichloroethane	ND		1	1.0	0.13	ug/L	01/27/2011 2321
1,2-Dichloroethane	ND		1	1.0	0.15	ug/L	01/27/2011 2321
1,1-Dichloroethene	ND		1	1.0	0.16	ug/L	01/27/2011 2321
cis-1,2-Dichloroethene	ND		1	1.0	0.12	ug/L	01/27/2011 2321
trans-1,2-Dichloroethene	ND		1	1.0	0.21	ug/L	01/27/2011 2321
1,2-Dichloropropane	ND		1	1.0	0.19	ug/L	01/27/2011 2321
cis-1,3-Dichloropropene	ND		1	1.0	0.092	ug/L	01/27/2011 2321
trans-1,3-Dichloropropene	ND		1	1.0	0.11	ug/L	01/27/2011 2321
Ethylbenzene	ND		1	1.0	0.33	ug/L	01/27/2011 2321
2-Hexanone	ND		1	10	0.27	ug/L	01/27/2011 2321
Methyl tertiary butyl ether (MTBE)	ND		1	1.0	0.40	ug/L	01/27/2011 2321
4-Methyl-2-pentanone	ND		1	10	0.31	ug/L	01/27/2011 2321
Methylene chloride	ND		1	1.0	0.33	ug/L	01/27/2011 2321
Styrene	ND		1	1.0	0.12	ug/L	01/27/2011 2321
1,1,2,2-Tetrachloroethane	ND		1	1.0	0.16	ug/L	01/27/2011 2321
Tetrachloroethene	ND		1	1.0	0.13	ug/L	01/27/2011 2321
Toluene	ND		1	1.0	0.33	ug/L	01/27/2011 2321
1,2,4-Trichlorobenzene	ND		1	1.0	0.51	ug/L	01/27/2011 2321
1,1,1-Trichloroethane	ND		1	1.0	0.074	ug/L	01/27/2011 2321
1,1,2-Trichloroethane	ND		1	1.0	0.21	ug/L	01/27/2011 2321
Trichloroethene	ND		1	1.0	0.18	ug/L	01/27/2011 2321
Vinyl chloride	ND		1	1.0	0.054	ug/L	01/27/2011 2321
Xylenes (total)	ND		1	1.0	0.33	ug/L	01/27/2011 2321

Surrogate	Q	% Rec	Acceptance Limit
Bromofluorobenzene		105	70-130
1,2-Dichloroethane-d4		98	70-130
Toluene-d8		103	70-130

PQL = Practical quantitation limit
ND = Not detected at or above the MDL
P = The RPD between two GC columns exceeds 40%
J = Estimated result < PQL and ≥ MDL
N - Recovery is out of criteria
+ - RPD is out of criteria

Where applicable, all soil sample analysis are reported on a dry weight basis unless flagged with a "W"

Note: Calculations are performed before rounding to avoid round-off errors in calculated results

Volatile Organic Compounds by GC/MS - LCS

Sample ID: MQ51631-002
Batch: 51631
Analytical Method: 8260B

Matrix: Aqueous
Prep Method: 5030B

Parameter	Spike Amount (ug/L)	Result (ug/L)	Q	Dil	% Rec	% Rec Limit	Analysis Date
Acetone	40	46		1	115	46-153	01/27/2011 2218
Benzene	20	19		1	95	72-127	01/27/2011 2218
Bromodichloromethane	20	15		1	77	71-143	01/27/2011 2218
Bromoform	20	15		1	74	65-131	01/27/2011 2218
Bromomethane (Methyl bromide)	20	22		1	108	36-168	01/27/2011 2218
2-Butanone (MEK)	40	37		1	91	60-140	01/27/2011 2218
Carbon disulfide	20	15		1	74	60-140	01/27/2011 2218
Carbon tetrachloride	20	18		1	91	37-166	01/27/2011 2218
Chlorobenzene	20	19		1	94	78-129	01/27/2011 2218
Chloroethane	20	20		1	101	42-163	01/27/2011 2218
Chloroform	20	18		1	92	63-123	01/27/2011 2218
Chloromethane (Methyl chloride)	20	18		1	90	20-158	01/27/2011 2218
Dibromochloromethane	20	15	N	1	73	74-134	01/27/2011 2218
1,2-Dichlorobenzene	20	19		1	97	70-130	01/27/2011 2218
1,3-Dichlorobenzene	20	19		1	95	70-130	01/27/2011 2218
1,4-Dichlorobenzene	20	19		1	96	70-130	01/27/2011 2218
1,1-Dichloroethane	20	19		1	94	69-132	01/27/2011 2218
1,2-Dichloroethane	20	19		1	94	59-143	01/27/2011 2218
1,1-Dichloroethene	20	19		1	96	50-132	01/27/2011 2218
cis-1,2-Dichloroethene	20	19		1	96	70-130	01/27/2011 2218
trans-1,2-Dichloroethene	20	19		1	95	67-141	01/27/2011 2218
1,2-Dichloropropane	20	20		1	99	71-126	01/27/2011 2218
cis-1,3-Dichloropropene	20	17		1	86	69-130	01/27/2011 2218
trans-1,3-Dichloropropene	20	18		1	88	73-131	01/27/2011 2218
Ethylbenzene	20	19		1	94	79-132	01/27/2011 2218
2-Hexanone	40	39		1	98	60-140	01/27/2011 2218
Methyl tertiary butyl ether (MTBE)	20	20		1	101	60-140	01/27/2011 2218
4-Methyl-2-pentanone	40	39		1	97	60-140	01/27/2011 2218
Methylene chloride	20	20		1	99	69-129	01/27/2011 2218
Styrene	20	18		1	91	70-130	01/27/2011 2218
1,1,2,2-Tetrachloroethane	20	20		1	101	60-155	01/27/2011 2218
Tetrachloroethene	20	19		1	94	70-130	01/27/2011 2218
Toluene	20	19		1	95	75-125	01/27/2011 2218
1,2,4-Trichlorobenzene	20	21		1	103	70-130	01/27/2011 2218
1,1,1-Trichloroethane	20	20		1	99	77-132	01/27/2011 2218
1,1,2-Trichloroethane	20	19		1	97	77-132	01/27/2011 2218
Trichloroethene	20	19		1	93	73-124	01/27/2011 2218
Vinyl chloride	20	20		1	99	29-159	01/27/2011 2218
Xylenes (total)	40	37		1	94	70-130	01/27/2011 2218

Surrogate	Q	% Rec	Acceptance Limit
Bromofluorobenzene		109	70-130
1,2-Dichloroethane-d4		97	70-130
Toluene-d8		106	70-130

PQL = Practical quantitation limit
ND = Not detected at or above the MDL
P = The RPD between two GC columns exceeds 40%
J = Estimated result < PQL and ≥ MDL
N - Recovery is out of criteria
+ - RPD is out of criteria

Where applicable, all soil sample analysis are reported on a dry weight basis unless flagged with a "W"

Note: Calculations are performed before rounding to avoid round-off errors in calculated results

Volatile Organic Compounds by GC/MS - LCSD

Sample ID: MQ51631-003
Batch: 51631
Analytical Method: 8260B

Matrix: Aqueous
Prep Method: 5030B

Parameter	Spike Amount (ug/L)	Result (ug/L)	Q	Dil	% Rec	% RPD	% Rec Limit	% RPD Limit	Analysis Date
Acetone	40	52		1	130	12	46-153	20	01/27/2011 2241
Benzene	20	24	+	1	120	23	72-127	20	01/27/2011 2241
Bromodichloromethane	20	20	+	1	98	25	71-143	20	01/27/2011 2241
Bromoform	20	19	+	1	97	27	65-131	20	01/27/2011 2241
Bromomethane (Methyl bromide)	20	23		1	116	7.0	36-168	20	01/27/2011 2241
2-Butanone (MEK)	40	39		1	99	7.5	60-140	20	01/27/2011 2241
Carbon disulfide	20	16		1	80	8.2	60-140	20	01/27/2011 2241
Carbon tetrachloride	20	22	+	1	112	21	37-166	20	01/27/2011 2241
Chlorobenzene	20	23		1	115	20	78-129	20	01/27/2011 2241
Chloroethane	20	23		1	113	11	42-163	20	01/27/2011 2241
Chloroform	20	23	+	1	113	21	63-123	20	01/27/2011 2241
Chloromethane (Methyl chloride)	20	20		1	102	12	20-158	20	01/27/2011 2241
Dibromochloromethane	20	19	+	1	94	25	74-134	20	01/27/2011 2241
1,2-Dichlorobenzene	20	23		1	115	17	70-130	20	01/27/2011 2241
1,3-Dichlorobenzene	20	23		1	116	20	70-130	20	01/27/2011 2241
1,4-Dichlorobenzene	20	24	+	1	119	21	70-130	20	01/27/2011 2241
1,1-Dichloroethane	20	23	+	1	117	21	69-132	20	01/27/2011 2241
1,2-Dichloroethane	20	23		1	114	19	59-143	20	01/27/2011 2241
1,1-Dichloroethene	20	24	+	1	120	23	50-132	20	01/27/2011 2241
cis-1,2-Dichloroethene	20	23		1	117	20	70-130	20	01/27/2011 2241
trans-1,2-Dichloroethene	20	23	+	1	117	21	67-141	20	01/27/2011 2241
1,2-Dichloropropane	20	24		1	120	19	71-126	20	01/27/2011 2241
cis-1,3-Dichloropropene	20	21		1	105	19	69-130	20	01/27/2011 2241
trans-1,3-Dichloropropene	20	22		1	108	20	73-131	20	01/27/2011 2241
Ethylbenzene	20	23	+	1	116	21	79-132	20	01/27/2011 2241
2-Hexanone	40	44		1	109	11	60-140	20	01/27/2011 2241
Methyl tertiary butyl ether (MTBE)	20	24		1	121	18	60-140	20	01/27/2011 2241
4-Methyl-2-pentanone	40	42		1	106	8.3	60-140	20	01/27/2011 2241
Methylene chloride	20	24		1	119	18	69-129	20	01/27/2011 2241
Styrene	20	22	+	1	112	21	70-130	20	01/27/2011 2241
1,1,2,2-Tetrachloroethane	20	24		1	120	17	60-155	20	01/27/2011 2241
Tetrachloroethene	20	23		1	115	20	70-130	20	01/27/2011 2241
Toluene	20	23		1	114	19	75-125	20	01/27/2011 2241
1,2,4-Trichlorobenzene	20	24		1	119	15	70-130	20	01/27/2011 2241
1,1,1-Trichloroethane	20	25	+	1	124	22	77-132	20	01/27/2011 2241
1,1,2-Trichloroethane	20	23		1	114	16	77-132	20	01/27/2011 2241
Trichloroethene	20	23		1	114	20	73-124	20	01/27/2011 2241
Vinyl chloride	20	22		1	112	12	29-159	20	01/27/2011 2241
Xylenes (total)	40	46	+	1	116	21	70-130	20	01/27/2011 2241

Surrogate	Q	% Rec	Acceptance Limit
Bromofluorobenzene		109	70-130
1,2-Dichloroethane-d4		100	70-130
Toluene-d8		105	70-130

PQL = Practical quantitation limit
ND = Not detected at or above the MDL
P = The RPD between two GC columns exceeds 40%
J = Estimated result < PQL and ≥ MDL
N - Recovery is out of criteria
+ - RPD is out of criteria

Where applicable, all soil sample analysis are reported on a dry weight basis unless flagged with a "W"

Note: Calculations are performed before rounding to avoid round-off errors in calculated results

Volatile Organic Compounds by GC/MS - MB

Sample ID: MQ51987-001
Batch: 51987
Analytical Method: 8260B

Matrix: Aqueous
Prep Method: 5030B

Parameter	Result	Q	Dil	PQL	MDL	Units	Analysis Date
Acetone	ND		1	20	6.7	ug/L	02/01/2011 1341
Benzene	ND		1	1.0	0.13	ug/L	02/01/2011 1341
Bromodichloromethane	ND		1	1.0	0.33	ug/L	02/01/2011 1341
Bromoform	ND		1	1.0	0.66	ug/L	02/01/2011 1341
Bromomethane (Methyl bromide)	ND		1	2.0	0.80	ug/L	02/01/2011 1341
2-Butanone (MEK)	ND		1	10	2.0	ug/L	02/01/2011 1341
Carbon disulfide	ND		1	1.0	0.097	ug/L	02/01/2011 1341
Carbon tetrachloride	ND		1	1.0	0.14	ug/L	02/01/2011 1341
Chlorobenzene	ND		1	2.0	0.33	ug/L	02/01/2011 1341
Chloroethane	ND		1	2.0	0.47	ug/L	02/01/2011 1341
Chloroform	ND		1	1.0	0.33	ug/L	02/01/2011 1341
Chloromethane (Methyl chloride)	ND		1	1.0	0.35	ug/L	02/01/2011 1341
Dibromochloromethane	ND		1	1.0	0.33	ug/L	02/01/2011 1341
1,2-Dichlorobenzene	ND		1	1.0	0.33	ug/L	02/01/2011 1341
1,3-Dichlorobenzene	ND		1	1.0	0.33	ug/L	02/01/2011 1341
1,4-Dichlorobenzene	ND		1	1.0	0.33	ug/L	02/01/2011 1341
1,1-Dichloroethane	ND		1	1.0	0.13	ug/L	02/01/2011 1341
1,2-Dichloroethane	ND		1	1.0	0.15	ug/L	02/01/2011 1341
1,1-Dichloroethene	ND		1	1.0	0.16	ug/L	02/01/2011 1341
cis-1,2-Dichloroethene	ND		1	1.0	0.12	ug/L	02/01/2011 1341
trans-1,2-Dichloroethene	ND		1	1.0	0.21	ug/L	02/01/2011 1341
1,2-Dichloropropane	ND		1	1.0	0.19	ug/L	02/01/2011 1341
cis-1,3-Dichloropropene	ND		1	1.0	0.092	ug/L	02/01/2011 1341
trans-1,3-Dichloropropene	ND		1	1.0	0.11	ug/L	02/01/2011 1341
Ethylbenzene	ND		1	1.0	0.33	ug/L	02/01/2011 1341
2-Hexanone	ND		1	10	0.27	ug/L	02/01/2011 1341
Methyl tertiary butyl ether (MTBE)	ND		1	1.0	0.40	ug/L	02/01/2011 1341
4-Methyl-2-pentanone	ND		1	10	0.31	ug/L	02/01/2011 1341
Methylene chloride	ND		1	1.0	0.33	ug/L	02/01/2011 1341
Styrene	ND		1	1.0	0.12	ug/L	02/01/2011 1341
1,1,2,2-Tetrachloroethane	ND		1	1.0	0.16	ug/L	02/01/2011 1341
Tetrachloroethene	ND		1	1.0	0.13	ug/L	02/01/2011 1341
Toluene	ND		1	1.0	0.33	ug/L	02/01/2011 1341
1,2,4-Trichlorobenzene	ND		1	1.0	0.51	ug/L	02/01/2011 1341
1,1,1-Trichloroethane	ND		1	1.0	0.074	ug/L	02/01/2011 1341
1,1,2-Trichloroethane	ND		1	1.0	0.21	ug/L	02/01/2011 1341
Trichloroethene	ND		1	1.0	0.18	ug/L	02/01/2011 1341
Vinyl chloride	ND		1	1.0	0.054	ug/L	02/01/2011 1341
Xylenes (total)	ND		1	1.0	0.33	ug/L	02/01/2011 1341

Surrogate	Q	% Rec	Acceptance Limit
Bromofluorobenzene		113	70-130
1,2-Dichloroethane-d4		110	70-130
Toluene-d8		107	70-130

PQL = Practical quantitation limit
ND = Not detected at or above the MDL
P = The RPD between two GC columns exceeds 40%
J = Estimated result < PQL and ≥ MDL
N - Recovery is out of criteria
+ - RPD is out of criteria

Where applicable, all soil sample analysis are reported on a dry weight basis unless flagged with a "W"

Note: Calculations are performed before rounding to avoid round-off errors in calculated results

Volatile Organic Compounds by GC/MS - LCS

Sample ID: MQ51987-002
Batch: 51987
Analytical Method: 8260B

Matrix: Aqueous
Prep Method: 5030B

Parameter	Spike Amount (ug/L)	Result (ug/L)	Q	Dil	% Rec	% Rec Limit	Analysis Date
Acetone	100	100		1	103	46-153	02/01/2011 1218
Benzene	50	51		1	101	72-127	02/01/2011 1218
Bromodichloromethane	50	53		1	107	71-143	02/01/2011 1218
Bromoform	50	51		1	101	65-131	02/01/2011 1218
Bromomethane (Methyl bromide)	50	37		1	75	36-168	02/01/2011 1218
2-Butanone (MEK)	100	93		1	93	60-140	02/01/2011 1218
Carbon disulfide	50	32		1	64	60-140	02/01/2011 1218
Carbon tetrachloride	50	52		1	103	37-166	02/01/2011 1218
Chlorobenzene	50	53		1	107	78-129	02/01/2011 1218
Chloroethane	50	45		1	90	42-163	02/01/2011 1218
Chloroform	50	49		1	97	63-123	02/01/2011 1218
Chloromethane (Methyl chloride)	50	48		1	95	20-158	02/01/2011 1218
Dibromochloromethane	50	54		1	108	74-134	02/01/2011 1218
1,2-Dichlorobenzene	50	54		1	108	70-130	02/01/2011 1218
1,3-Dichlorobenzene	50	54		1	107	70-130	02/01/2011 1218
1,4-Dichlorobenzene	50	53		1	106	70-130	02/01/2011 1218
1,1-Dichloroethane	50	47		1	94	69-132	02/01/2011 1218
1,2-Dichloroethane	50	51		1	102	59-143	02/01/2011 1218
1,1-Dichloroethene	50	47		1	94	50-132	02/01/2011 1218
cis-1,2-Dichloroethene	50	47		1	94	70-130	02/01/2011 1218
trans-1,2-Dichloroethene	50	48		1	95	67-141	02/01/2011 1218
1,2-Dichloropropane	50	49		1	97	71-126	02/01/2011 1218
cis-1,3-Dichloropropene	50	50		1	100	69-130	02/01/2011 1218
trans-1,3-Dichloropropene	50	55		1	110	73-131	02/01/2011 1218
Ethylbenzene	50	54		1	108	79-132	02/01/2011 1218
2-Hexanone	100	110		1	108	60-140	02/01/2011 1218
Methyl tertiary butyl ether (MTBE)	50	48		1	96	60-140	02/01/2011 1218
4-Methyl-2-pentanone	100	100		1	102	60-140	02/01/2011 1218
Methylene chloride	50	46		1	92	69-129	02/01/2011 1218
Styrene	50	55		1	111	70-130	02/01/2011 1218
1,1,2,2-Tetrachloroethane	50	53		1	105	60-155	02/01/2011 1218
Tetrachloroethene	50	57		1	113	70-130	02/01/2011 1218
Toluene	50	52		1	103	75-125	02/01/2011 1218
1,2,4-Trichlorobenzene	50	56		1	112	70-130	02/01/2011 1218
1,1,1-Trichloroethane	50	51		1	103	77-132	02/01/2011 1218
1,1,2-Trichloroethane	50	53		1	106	77-132	02/01/2011 1218
Trichloroethene	50	51		1	102	73-124	02/01/2011 1218
Vinyl chloride	50	46		1	92	29-159	02/01/2011 1218
Xylenes (total)	100	110		1	110	70-130	02/01/2011 1218

Surrogate	Q	% Rec	Acceptance Limit
Bromofluorobenzene		113	70-130
1,2-Dichloroethane-d4		109	70-130
Toluene-d8		107	70-130

PQL = Practical quantitation limit
ND = Not detected at or above the MDL
P = The RPD between two GC columns exceeds 40%
J = Estimated result < PQL and ≥ MDL
N - Recovery is out of criteria
+ - RPD is out of criteria

Where applicable, all soil sample analysis are reported on a dry weight basis unless flagged with a "W"

Note: Calculations are performed before rounding to avoid round-off errors in calculated results

Volatile Organic Compounds by GC/MS - LCSD

Sample ID: MQ51987-003
Batch: 51987
Analytical Method: 8260B

Matrix: Aqueous
Prep Method: 5030B

Parameter	Spike Amount (ug/L)	Result (ug/L)	Q	Dil	% Rec	% RPD	% Rec Limit	% RPD Limit	Analysis Date
Acetone	100	97		1	97	6.6	46-153	20	02/01/2011 1239
Benzene	50	50		1	100	1.5	72-127	20	02/01/2011 1239
Bromodichloromethane	50	53		1	107	0.34	71-143	20	02/01/2011 1239
Bromoform	50	49		1	99	2.5	65-131	20	02/01/2011 1239
Bromomethane (Methyl bromide)	50	44		1	88	16	36-168	20	02/01/2011 1239
2-Butanone (MEK)	100	90		1	90	3.6	60-140	20	02/01/2011 1239
Carbon disulfide	50	32		1	64	0.88	60-140	20	02/01/2011 1239
Carbon tetrachloride	50	52		1	103	0.25	37-166	20	02/01/2011 1239
Chlorobenzene	50	53		1	106	0.55	78-129	20	02/01/2011 1239
Chloroethane	50	44		1	89	1.2	42-163	20	02/01/2011 1239
Chloroform	50	48		1	96	1.1	63-123	20	02/01/2011 1239
Chloromethane (Methyl chloride)	50	43		1	86	9.7	20-158	20	02/01/2011 1239
Dibromochloromethane	50	53		1	106	1.6	74-134	20	02/01/2011 1239
1,2-Dichlorobenzene	50	53		1	106	2.0	70-130	20	02/01/2011 1239
1,3-Dichlorobenzene	50	53		1	106	1.7	70-130	20	02/01/2011 1239
1,4-Dichlorobenzene	50	52		1	104	2.2	70-130	20	02/01/2011 1239
1,1-Dichloroethane	50	46		1	92	2.1	69-132	20	02/01/2011 1239
1,2-Dichloroethane	50	51		1	103	0.11	59-143	20	02/01/2011 1239
1,1-Dichloroethene	50	47		1	94	0.45	50-132	20	02/01/2011 1239
cis-1,2-Dichloroethene	50	46		1	92	2.3	70-130	20	02/01/2011 1239
trans-1,2-Dichloroethene	50	47		1	94	0.76	67-141	20	02/01/2011 1239
1,2-Dichloropropane	50	48		1	97	0.52	71-126	20	02/01/2011 1239
cis-1,3-Dichloropropene	50	49		1	99	1.1	69-130	20	02/01/2011 1239
trans-1,3-Dichloropropene	50	55		1	109	0.69	73-131	20	02/01/2011 1239
Ethylbenzene	50	53		1	106	1.1	79-132	20	02/01/2011 1239
2-Hexanone	100	100		1	102	6.0	60-140	20	02/01/2011 1239
Methyl tertiary butyl ether (MTBE)	50	48		1	95	0.88	60-140	20	02/01/2011 1239
4-Methyl-2-pentanone	100	97		1	97	4.9	60-140	20	02/01/2011 1239
Methylene chloride	50	45		1	90	1.4	69-129	20	02/01/2011 1239
Styrene	50	55		1	109	1.6	70-130	20	02/01/2011 1239
1,1,2,2-Tetrachloroethane	50	51		1	103	2.1	60-155	20	02/01/2011 1239
Tetrachloroethene	50	56		1	112	0.85	70-130	20	02/01/2011 1239
Toluene	50	51		1	101	1.7	75-125	20	02/01/2011 1239
1,2,4-Trichlorobenzene	50	55		1	110	2.0	70-130	20	02/01/2011 1239
1,1,1-Trichloroethane	50	51		1	103	0.014	77-132	20	02/01/2011 1239
1,1,2-Trichloroethane	50	53		1	105	1.1	77-132	20	02/01/2011 1239
Trichloroethene	50	51		1	103	0.45	73-124	20	02/01/2011 1239
Vinyl chloride	50	43		1	86	6.5	29-159	20	02/01/2011 1239
Xylenes (total)	100	110		1	108	1.8	70-130	20	02/01/2011 1239

Surrogate	Q	% Rec	Acceptance Limit
Bromofluorobenzene		114	70-130
1,2-Dichloroethane-d4		110	70-130
Toluene-d8		107	70-130

PQL = Practical quantitation limit
ND = Not detected at or above the MDL
P = The RPD between two GC columns exceeds 40%
J = Estimated result < PQL and ≥ MDL
N - Recovery is out of criteria
+ - RPD is out of criteria

Where applicable, all soil sample analysis are reported on a dry weight basis unless flagged with a "W"

Note: Calculations are performed before rounding to avoid round-off errors in calculated results

Volatile Organic Compounds by GC/MS - MB

Sample ID: MQ52835-001
Batch: 52835
Analytical Method: 8260B

Matrix: Aqueous
Prep Method: 5030B

Parameter	Result	Q	Dil	PQL	MDL	Units	Analysis Date
Acetone	ND		1	20	6.7	ug/L	01/29/2011 0158
Benzene	ND		1	1.0	0.13	ug/L	01/29/2011 0158
Bromodichloromethane	ND		1	1.0	0.33	ug/L	01/29/2011 0158
Bromoform	ND		1	1.0	0.66	ug/L	01/29/2011 0158
Bromomethane (Methyl bromide)	ND		1	2.0	0.80	ug/L	01/29/2011 0158
2-Butanone (MEK)	ND		1	10	2.0	ug/L	01/29/2011 0158
Carbon disulfide	ND		1	1.0	0.097	ug/L	01/29/2011 0158
Carbon tetrachloride	ND		1	1.0	0.14	ug/L	01/29/2011 0158
Chlorobenzene	ND		1	2.0	0.33	ug/L	01/29/2011 0158
Chloroethane	ND		1	2.0	0.47	ug/L	01/29/2011 0158
Chloroform	ND		1	1.0	0.33	ug/L	01/29/2011 0158
Chloromethane (Methyl chloride)	ND		1	1.0	0.35	ug/L	01/29/2011 0158
Dibromochloromethane	ND		1	1.0	0.33	ug/L	01/29/2011 0158
1,2-Dichlorobenzene	ND		1	1.0	0.33	ug/L	01/29/2011 0158
1,3-Dichlorobenzene	ND		1	1.0	0.33	ug/L	01/29/2011 0158
1,4-Dichlorobenzene	ND		1	1.0	0.33	ug/L	01/29/2011 0158
1,1-Dichloroethane	ND		1	1.0	0.13	ug/L	01/29/2011 0158
1,2-Dichloroethane	ND		1	1.0	0.15	ug/L	01/29/2011 0158
1,1-Dichloroethene	ND		1	1.0	0.16	ug/L	01/29/2011 0158
cis-1,2-Dichloroethene	ND		1	1.0	0.12	ug/L	01/29/2011 0158
trans-1,2-Dichloroethene	ND		1	1.0	0.21	ug/L	01/29/2011 0158
1,2-Dichloropropane	ND		1	1.0	0.19	ug/L	01/29/2011 0158
cis-1,3-Dichloropropene	ND		1	1.0	0.092	ug/L	01/29/2011 0158
trans-1,3-Dichloropropene	ND		1	1.0	0.11	ug/L	01/29/2011 0158
Ethylbenzene	ND		1	1.0	0.33	ug/L	01/29/2011 0158
2-Hexanone	ND		1	10	0.27	ug/L	01/29/2011 0158
Methyl tertiary butyl ether (MTBE)	ND		1	1.0	0.40	ug/L	01/29/2011 0158
4-Methyl-2-pentanone	ND		1	10	0.31	ug/L	01/29/2011 0158
Methylene chloride	ND		1	1.0	0.33	ug/L	01/29/2011 0158
Styrene	ND		1	1.0	0.12	ug/L	01/29/2011 0158
1,1,2,2-Tetrachloroethane	ND		1	1.0	0.16	ug/L	01/29/2011 0158
Tetrachloroethene	ND		1	1.0	0.13	ug/L	01/29/2011 0158
Toluene	ND		1	1.0	0.33	ug/L	01/29/2011 0158
1,2,4-Trichlorobenzene	ND		1	1.0	0.51	ug/L	01/29/2011 0158
1,1,1-Trichloroethane	ND		1	1.0	0.074	ug/L	01/29/2011 0158
1,1,2-Trichloroethane	ND		1	1.0	0.21	ug/L	01/29/2011 0158
Trichloroethene	ND		1	1.0	0.18	ug/L	01/29/2011 0158
Vinyl chloride	ND		1	1.0	0.054	ug/L	01/29/2011 0158
Xylenes (total)	ND		1	1.0	0.33	ug/L	01/29/2011 0158

Surrogate	Q	% Rec	Acceptance Limit
Bromofluorobenzene		114	70-130
1,2-Dichloroethane-d4		111	70-130
Toluene-d8		106	70-130

PQL = Practical quantitation limit
ND = Not detected at or above the MDL
P = The RPD between two GC columns exceeds 40%
J = Estimated result < PQL and ≥ MDL
N - Recovery is out of criteria
+ - RPD is out of criteria

Where applicable, all soil sample analysis are reported on a dry weight basis unless flagged with a "W"

Note: Calculations are performed before rounding to avoid round-off errors in calculated results

Volatile Organic Compounds by GC/MS - LCS

Sample ID: MQ52835-002
Batch: 52835
Analytical Method: 8260B

Matrix: Aqueous
Prep Method: 5030B

Parameter	Spike Amount (ug/L)	Result (ug/L)	Q	Dil	% Rec	% Rec Limit	Analysis Date
Acetone	100	100		1	105	46-153	01/29/2011 0034
Benzene	50	50		1	99	72-127	01/29/2011 0034
Bromodichloromethane	50	52		1	104	71-143	01/29/2011 0034
Bromoform	50	49		1	98	65-131	01/29/2011 0034
Bromomethane (Methyl bromide)	50	39		1	78	36-168	01/29/2011 0034
2-Butanone (MEK)	100	96		1	96	60-140	01/29/2011 0034
Carbon disulfide	50	32		1	64	60-140	01/29/2011 0034
Carbon tetrachloride	50	49		1	98	37-166	01/29/2011 0034
Chlorobenzene	50	53		1	106	78-129	01/29/2011 0034
Chloroethane	50	47		1	94	42-163	01/29/2011 0034
Chloroform	50	48		1	96	63-123	01/29/2011 0034
Chloromethane (Methyl chloride)	50	49		1	97	20-158	01/29/2011 0034
Dibromochloromethane	50	53		1	106	74-134	01/29/2011 0034
1,2-Dichlorobenzene	50	53		1	107	70-130	01/29/2011 0034
1,3-Dichlorobenzene	50	53		1	106	70-130	01/29/2011 0034
1,4-Dichlorobenzene	50	53		1	106	70-130	01/29/2011 0034
1,1-Dichloroethane	50	47		1	94	69-132	01/29/2011 0034
1,2-Dichloroethane	50	52		1	105	59-143	01/29/2011 0034
1,1-Dichloroethene	50	46		1	93	50-132	01/29/2011 0034
cis-1,2-Dichloroethene	50	46		1	92	70-130	01/29/2011 0034
trans-1,2-Dichloroethene	50	47		1	93	67-141	01/29/2011 0034
1,2-Dichloropropane	50	50		1	100	71-126	01/29/2011 0034
cis-1,3-Dichloropropene	50	50		1	99	69-130	01/29/2011 0034
trans-1,3-Dichloropropene	50	57		1	114	73-131	01/29/2011 0034
Ethylbenzene	50	53		1	106	79-132	01/29/2011 0034
2-Hexanone	100	120		1	117	60-140	01/29/2011 0034
Methyl tertiary butyl ether (MTBE)	50	49		1	98	60-140	01/29/2011 0034
4-Methyl-2-pentanone	100	110		1	107	60-140	01/29/2011 0034
Methylene chloride	50	46		1	92	69-129	01/29/2011 0034
Styrene	50	55		1	110	70-130	01/29/2011 0034
1,1,2,2-Tetrachloroethane	50	55		1	110	60-155	01/29/2011 0034
Tetrachloroethene	50	55		1	110	70-130	01/29/2011 0034
Toluene	50	50		1	99	75-125	01/29/2011 0034
1,2,4-Trichlorobenzene	50	55		1	111	70-130	01/29/2011 0034
1,1,1-Trichloroethane	50	49		1	99	77-132	01/29/2011 0034
1,1,2-Trichloroethane	50	54		1	109	77-132	01/29/2011 0034
Trichloroethene	50	49		1	98	73-124	01/29/2011 0034
Vinyl chloride	50	46		1	92	29-159	01/29/2011 0034
Xylenes (total)	100	110		1	108	70-130	01/29/2011 0034

Surrogate	Q	% Rec	Acceptance Limit
Bromofluorobenzene		115	70-130
1,2-Dichloroethane-d4		114	70-130
Toluene-d8		106	70-130

PQL = Practical quantitation limit
ND = Not detected at or above the MDL
P = The RPD between two GC columns exceeds 40%
J = Estimated result < PQL and ≥ MDL
N - Recovery is out of criteria
+ - RPD is out of criteria

Where applicable, all soil sample analysis are reported on a dry weight basis unless flagged with a "W"

Note: Calculations are performed before rounding to avoid round-off errors in calculated results

Volatile Organic Compounds by GC/MS - LCSD

Sample ID: MQ52835-003
Batch: 52835
Analytical Method: 8260B

Matrix: Aqueous
Prep Method: 5030B

Parameter	Spike Amount (ug/L)	Result (ug/L)	Q	Dil	% Rec	% RPD	% Rec Limit	% RPD Limit	Analysis Date
Acetone	100	100		1	100	4.3	46-153	20	01/29/2011 0055
Benzene	50	50		1	101	1.5	72-127	20	01/29/2011 0055
Bromodichloromethane	50	52		1	103	1.1	71-143	20	01/29/2011 0055
Bromoform	50	48		1	95	3.3	65-131	20	01/29/2011 0055
Bromomethane (Methyl bromide)	50	44		1	88	12	36-168	20	01/29/2011 0055
2-Butanone (MEK)	100	90		1	90	6.1	60-140	20	01/29/2011 0055
Carbon disulfide	50	33		1	66	2.5	60-140	20	01/29/2011 0055
Carbon tetrachloride	50	50		1	100	1.9	37-166	20	01/29/2011 0055
Chlorobenzene	50	53		1	106	0.075	78-129	20	01/29/2011 0055
Chloroethane	50	47		1	93	0.54	42-163	20	01/29/2011 0055
Chloroform	50	47		1	95	1.2	63-123	20	01/29/2011 0055
Chloromethane (Methyl chloride)	50	44		1	87	11	20-158	20	01/29/2011 0055
Dibromochloromethane	50	52		1	103	2.9	74-134	20	01/29/2011 0055
1,2-Dichlorobenzene	50	54		1	109	2.0	70-130	20	01/29/2011 0055
1,3-Dichlorobenzene	50	54		1	109	2.3	70-130	20	01/29/2011 0055
1,4-Dichlorobenzene	50	54		1	108	2.4	70-130	20	01/29/2011 0055
1,1-Dichloroethane	50	46		1	93	1.5	69-132	20	01/29/2011 0055
1,2-Dichloroethane	50	50		1	100	4.9	59-143	20	01/29/2011 0055
1,1-Dichloroethene	50	48		1	96	3.5	50-132	20	01/29/2011 0055
cis-1,2-Dichloroethene	50	46		1	92	0.56	70-130	20	01/29/2011 0055
trans-1,2-Dichloroethene	50	47		1	93	0.26	67-141	20	01/29/2011 0055
1,2-Dichloropropane	50	49		1	98	1.6	71-126	20	01/29/2011 0055
cis-1,3-Dichloropropene	50	49		1	98	1.3	69-130	20	01/29/2011 0055
trans-1,3-Dichloropropene	50	55		1	110	3.1	73-131	20	01/29/2011 0055
Ethylbenzene	50	54		1	107	1.2	79-132	20	01/29/2011 0055
2-Hexanone	100	110		1	110	5.7	60-140	20	01/29/2011 0055
Methyl tertiary butyl ether (MTBE)	50	46		1	92	6.7	60-140	20	01/29/2011 0055
4-Methyl-2-pentanone	100	100		1	101	5.9	60-140	20	01/29/2011 0055
Methylene chloride	50	45		1	89	2.3	69-129	20	01/29/2011 0055
Styrene	50	55		1	110	0.38	70-130	20	01/29/2011 0055
1,1,2,2-Tetrachloroethane	50	54		1	109	1.1	60-155	20	01/29/2011 0055
Tetrachloroethene	50	58		1	116	5.4	70-130	20	01/29/2011 0055
Toluene	50	50		1	101	1.5	75-125	20	01/29/2011 0055
1,2,4-Trichlorobenzene	50	56		1	112	1.4	70-130	20	01/29/2011 0055
1,1,1-Trichloroethane	50	51		1	101	2.5	77-132	20	01/29/2011 0055
1,1,2-Trichloroethane	50	53		1	106	3.2	77-132	20	01/29/2011 0055
Trichloroethene	50	51		1	101	3.2	73-124	20	01/29/2011 0055
Vinyl chloride	50	43		1	85	7.8	29-159	20	01/29/2011 0055
Xylenes (total)	100	110		1	110	1.8	70-130	20	01/29/2011 0055

Surrogate	Q	% Rec	Acceptance Limit
Bromofluorobenzene		112	70-130
1,2-Dichloroethane-d4		110	70-130
Toluene-d8		105	70-130

PQL = Practical quantitation limit
ND = Not detected at or above the MDL
P = The RPD between two GC columns exceeds 40%
J = Estimated result < PQL and ≥ MDL
N - Recovery is out of criteria
+ - RPD is out of criteria

Where applicable, all soil sample analysis are reported on a dry weight basis unless flagged with a "W"

Note: Calculations are performed before rounding to avoid round-off errors in calculated results

Volatile Organic Compounds by GC/MS - MB

Sample ID: MQ52836-001
Batch: 52836
Analytical Method: 8260B

Matrix: Aqueous
Prep Method: 5030B

Parameter	Result	Q	Dil	PQL	MDL	Units	Analysis Date
Acetone	ND		1	20	6.7	ug/L	02/01/2011 0032
Benzene	ND		1	1.0	0.13	ug/L	02/01/2011 0032
Bromodichloromethane	ND		1	1.0	0.33	ug/L	02/01/2011 0032
Bromoform	ND		1	1.0	0.66	ug/L	02/01/2011 0032
Bromomethane (Methyl bromide)	ND		1	2.0	0.80	ug/L	02/01/2011 0032
2-Butanone (MEK)	ND		1	10	2.0	ug/L	02/01/2011 0032
Carbon disulfide	ND		1	1.0	0.097	ug/L	02/01/2011 0032
Carbon tetrachloride	ND		1	1.0	0.14	ug/L	02/01/2011 0032
Chlorobenzene	ND		1	2.0	0.33	ug/L	02/01/2011 0032
Chloroethane	ND		1	2.0	0.47	ug/L	02/01/2011 0032
Chloroform	ND		1	1.0	0.33	ug/L	02/01/2011 0032
Chloromethane (Methyl chloride)	ND		1	1.0	0.35	ug/L	02/01/2011 0032
Dibromochloromethane	ND		1	1.0	0.33	ug/L	02/01/2011 0032
1,2-Dichlorobenzene	ND		1	1.0	0.33	ug/L	02/01/2011 0032
1,3-Dichlorobenzene	ND		1	1.0	0.33	ug/L	02/01/2011 0032
1,4-Dichlorobenzene	ND		1	1.0	0.33	ug/L	02/01/2011 0032
1,1-Dichloroethane	ND		1	1.0	0.13	ug/L	02/01/2011 0032
1,2-Dichloroethane	ND		1	1.0	0.15	ug/L	02/01/2011 0032
1,1-Dichloroethene	ND		1	1.0	0.16	ug/L	02/01/2011 0032
cis-1,2-Dichloroethene	ND		1	1.0	0.12	ug/L	02/01/2011 0032
trans-1,2-Dichloroethene	ND		1	1.0	0.21	ug/L	02/01/2011 0032
1,2-Dichloropropane	ND		1	1.0	0.19	ug/L	02/01/2011 0032
cis-1,3-Dichloropropene	ND		1	1.0	0.092	ug/L	02/01/2011 0032
trans-1,3-Dichloropropene	ND		1	1.0	0.11	ug/L	02/01/2011 0032
Ethylbenzene	ND		1	1.0	0.33	ug/L	02/01/2011 0032
2-Hexanone	ND		1	10	0.27	ug/L	02/01/2011 0032
Methyl tertiary butyl ether (MTBE)	ND		1	1.0	0.40	ug/L	02/01/2011 0032
4-Methyl-2-pentanone	ND		1	10	0.31	ug/L	02/01/2011 0032
Methylene chloride	ND		1	1.0	0.33	ug/L	02/01/2011 0032
Styrene	ND		1	1.0	0.12	ug/L	02/01/2011 0032
1,1,2,2-Tetrachloroethane	ND		1	1.0	0.16	ug/L	02/01/2011 0032
Tetrachloroethene	ND		1	1.0	0.13	ug/L	02/01/2011 0032
Toluene	ND		1	1.0	0.33	ug/L	02/01/2011 0032
1,2,4-Trichlorobenzene	ND		1	1.0	0.51	ug/L	02/01/2011 0032
1,1,1-Trichloroethane	ND		1	1.0	0.074	ug/L	02/01/2011 0032
1,1,2-Trichloroethane	ND		1	1.0	0.21	ug/L	02/01/2011 0032
Trichloroethene	ND		1	1.0	0.18	ug/L	02/01/2011 0032
Vinyl chloride	ND		1	1.0	0.054	ug/L	02/01/2011 0032
Xylenes (total)	ND		1	1.0	0.33	ug/L	02/01/2011 0032

Surrogate	Q	% Rec	Acceptance Limit
Bromofluorobenzene		88	70-130
1,2-Dichloroethane-d4		90	70-130
Toluene-d8		92	70-130

PQL = Practical quantitation limit
ND = Not detected at or above the MDL
P = The RPD between two GC columns exceeds 40%
J = Estimated result < PQL and ≥ MDL
N - Recovery is out of criteria
+ - RPD is out of criteria

Where applicable, all soil sample analysis are reported on a dry weight basis unless flagged with a "W"

Note: Calculations are performed before rounding to avoid round-off errors in calculated results

Volatile Organic Compounds by GC/MS - LCS

Sample ID: MQ52836-002
Batch: 52836
Analytical Method: 8260B

Matrix: Aqueous
Prep Method: 5030B

Parameter	Spike Amount (ug/L)	Result (ug/L)	Q	Dil	% Rec	% Rec Limit	Analysis Date
Acetone	100	93		1	93	46-153	01/31/2011 2306
Benzene	50	47		1	95	72-127	01/31/2011 2306
Bromodichloromethane	50	50		1	101	71-143	01/31/2011 2306
Bromoform	50	50		1	101	65-131	01/31/2011 2306
Bromomethane (Methyl bromide)	50	38		1	75	36-168	01/31/2011 2306
2-Butanone (MEK)	100	99		1	99	60-140	01/31/2011 2306
Carbon disulfide	50	34		1	68	60-140	01/31/2011 2306
Carbon tetrachloride	50	49		1	98	37-166	01/31/2011 2306
Chlorobenzene	50	46		1	92	78-129	01/31/2011 2306
Chloroethane	50	41		1	82	42-163	01/31/2011 2306
Chloroform	50	47		1	94	63-123	01/31/2011 2306
Chloromethane (Methyl chloride)	50	58		1	116	20-158	01/31/2011 2306
Dibromochloromethane	50	48		1	96	74-134	01/31/2011 2306
1,2-Dichlorobenzene	50	47		1	93	70-130	01/31/2011 2306
1,3-Dichlorobenzene	50	47		1	93	70-130	01/31/2011 2306
1,4-Dichlorobenzene	50	45		1	91	70-130	01/31/2011 2306
1,1-Dichloroethane	50	45		1	90	69-132	01/31/2011 2306
1,2-Dichloroethane	50	46		1	93	59-143	01/31/2011 2306
1,1-Dichloroethene	50	47		1	93	50-132	01/31/2011 2306
cis-1,2-Dichloroethene	50	46		1	92	70-130	01/31/2011 2306
trans-1,2-Dichloroethene	50	46		1	92	67-141	01/31/2011 2306
1,2-Dichloropropane	50	46		1	93	71-126	01/31/2011 2306
cis-1,3-Dichloropropene	50	49		1	99	69-130	01/31/2011 2306
trans-1,3-Dichloropropene	50	51		1	103	73-131	01/31/2011 2306
Ethylbenzene	50	47		1	94	79-132	01/31/2011 2306
2-Hexanone	100	97		1	97	60-140	01/31/2011 2306
Methyl tertiary butyl ether (MTBE)	50	48		1	97	60-140	01/31/2011 2306
4-Methyl-2-pentanone	100	95		1	95	60-140	01/31/2011 2306
Methylene chloride	50	45		1	90	69-129	01/31/2011 2306
Styrene	50	52		1	104	70-130	01/31/2011 2306
1,1,2,2-Tetrachloroethane	50	46		1	92	60-155	01/31/2011 2306
Tetrachloroethene	50	50		1	100	70-130	01/31/2011 2306
Toluene	50	48		1	97	75-125	01/31/2011 2306
1,2,4-Trichlorobenzene	50	47		1	95	70-130	01/31/2011 2306
1,1,1-Trichloroethane	50	47		1	94	77-132	01/31/2011 2306
1,1,2-Trichloroethane	50	47		1	95	77-132	01/31/2011 2306
Trichloroethene	50	48		1	97	73-124	01/31/2011 2306
Vinyl chloride	50	57		1	114	29-159	01/31/2011 2306
Xylenes (total)	100	97		1	97	70-130	01/31/2011 2306

Surrogate	Q	% Rec	Acceptance Limit
Bromofluorobenzene		91	70-130
1,2-Dichloroethane-d4		88	70-130
Toluene-d8		93	70-130

PQL = Practical quantitation limit
ND = Not detected at or above the MDL
P = The RPD between two GC columns exceeds 40%
J = Estimated result < PQL and ≥ MDL
N - Recovery is out of criteria
+ - RPD is out of criteria

Where applicable, all soil sample analysis are reported on a dry weight basis unless flagged with a "W"

Note: Calculations are performed before rounding to avoid round-off errors in calculated results

Volatile Organic Compounds by GC/MS - LCSD

Sample ID: MQ52836-003
Batch: 52836
Analytical Method: 8260B

Matrix: Aqueous
Prep Method: 5030B

Parameter	Spike Amount (ug/L)	Result (ug/L)	Q	Dil	% Rec	% RPD	% Rec Limit	% RPD Limit	Analysis Date
Acetone	100	87		1	87	6.3	46-153	20	01/31/2011 2327
Benzene	50	46		1	93	2.2	72-127	20	01/31/2011 2327
Bromodichloromethane	50	49		1	98	3.0	71-143	20	01/31/2011 2327
Bromoform	50	49		1	98	2.9	65-131	20	01/31/2011 2327
Bromomethane (Methyl bromide)	50	35		1	69	8.0	36-168	20	01/31/2011 2327
2-Butanone (MEK)	100	90		1	90	10	60-140	20	01/31/2011 2327
Carbon disulfide	50	33		1	66	3.7	60-140	20	01/31/2011 2327
Carbon tetrachloride	50	48		1	95	2.8	37-166	20	01/31/2011 2327
Chlorobenzene	50	45		1	91	2.0	78-129	20	01/31/2011 2327
Chloroethane	50	44		1	89	8.1	42-163	20	01/31/2011 2327
Chloroform	50	45		1	91	3.7	63-123	20	01/31/2011 2327
Chloromethane (Methyl chloride)	50	51		1	103	12	20-158	20	01/31/2011 2327
Dibromochloromethane	50	47		1	93	2.3	74-134	20	01/31/2011 2327
1,2-Dichlorobenzene	50	46		1	91	2.0	70-130	20	01/31/2011 2327
1,3-Dichlorobenzene	50	46		1	92	1.4	70-130	20	01/31/2011 2327
1,4-Dichlorobenzene	50	44		1	89	1.9	70-130	20	01/31/2011 2327
1,1-Dichloroethane	50	43		1	87	4.2	69-132	20	01/31/2011 2327
1,2-Dichloroethane	50	45		1	90	3.0	59-143	20	01/31/2011 2327
1,1-Dichloroethene	50	45		1	91	2.9	50-132	20	01/31/2011 2327
cis-1,2-Dichloroethene	50	45		1	89	2.9	70-130	20	01/31/2011 2327
trans-1,2-Dichloroethene	50	45		1	89	2.9	67-141	20	01/31/2011 2327
1,2-Dichloropropane	50	46		1	91	1.9	71-126	20	01/31/2011 2327
cis-1,3-Dichloropropene	50	48		1	96	2.9	69-130	20	01/31/2011 2327
trans-1,3-Dichloropropene	50	50		1	100	3.1	73-131	20	01/31/2011 2327
Ethylbenzene	50	46		1	92	1.6	79-132	20	01/31/2011 2327
2-Hexanone	100	90		1	90	7.5	60-140	20	01/31/2011 2327
Methyl tertiary butyl ether (MTBE)	50	47		1	95	2.0	60-140	20	01/31/2011 2327
4-Methyl-2-pentanone	100	90		1	90	5.8	60-140	20	01/31/2011 2327
Methylene chloride	50	43		1	86	3.6	69-129	20	01/31/2011 2327
Styrene	50	51		1	102	1.4	70-130	20	01/31/2011 2327
1,1,2,2-Tetrachloroethane	50	44		1	89	3.1	60-155	20	01/31/2011 2327
Tetrachloroethene	50	48		1	97	2.7	70-130	20	01/31/2011 2327
Toluene	50	47		1	93	3.6	75-125	20	01/31/2011 2327
1,2,4-Trichlorobenzene	50	47		1	95	0.0021	70-130	20	01/31/2011 2327
1,1,1-Trichloroethane	50	46		1	92	2.6	77-132	20	01/31/2011 2327
1,1,2-Trichloroethane	50	46		1	92	2.2	77-132	20	01/31/2011 2327
Trichloroethene	50	47		1	95	2.1	73-124	20	01/31/2011 2327
Vinyl chloride	50	51		1	103	10	29-159	20	01/31/2011 2327
Xylenes (total)	100	94		1	94	2.8	70-130	20	01/31/2011 2327

Surrogate	Q	% Rec	Acceptance Limit
Bromofluorobenzene		90	70-130
1,2-Dichloroethane-d4		87	70-130
Toluene-d8		93	70-130

PQL = Practical quantitation limit
ND = Not detected at or above the MDL
P = The RPD between two GC columns exceeds 40%
J = Estimated result < PQL and ≥ MDL
N - Recovery is out of criteria
+ - RPD is out of criteria

Where applicable, all soil sample analysis are reported on a dry weight basis unless flagged with a "W"

Note: Calculations are performed before rounding to avoid round-off errors in calculated results

Semivolatile Organic Compounds by GC/MS - MB

Sample ID: MQ51601-001
Batch: 51601
Analytical Method: 8270D

Matrix: Aqueous
Prep Method: 3520C
Prep Date: 01/28/2011 1207

Parameter	Result	Q	Dil	PQL	MDL	Units	Analysis Date
2,4,5-Trichlorophenol	ND		1	1.0	0.18	ug/L	02/01/2011 1847
2,4,6-Trichlorophenol	ND		1	1.0	0.22	ug/L	02/01/2011 1847
2,4-Dichlorophenol	ND		1	1.0	0.15	ug/L	02/01/2011 1847
2,4-Dimethylphenol	ND		1	1.0	0.31	ug/L	02/01/2011 1847
2,4-Dinitrophenol	ND		1	5.0	0.25	ug/L	02/01/2011 1847
2,4-Dinitrotoluene	ND		1	2.0	0.45	ug/L	02/01/2011 1847
2,6-Dinitrotoluene	ND		1	2.0	0.40	ug/L	02/01/2011 1847
2-Chloronaphthalene	ND		1	1.0	0.12	ug/L	02/01/2011 1847
2-Chlorophenol	ND		1	1.0	0.13	ug/L	02/01/2011 1847
2-Methylnaphthalene	ND		1	1.0	0.080	ug/L	02/01/2011 1847
2-Methylphenol	ND		1	1.0	0.17	ug/L	02/01/2011 1847
2-Nitroaniline	ND		1	2.0	0.55	ug/L	02/01/2011 1847
2-Nitrophenol	ND		1	2.0	0.27	ug/L	02/01/2011 1847
3 & 4-Methylphenol	ND		1	2.0	0.57	ug/L	02/01/2011 1847
3,3'-Dichlorobenzidine	ND		1	5.0	0.81	ug/L	02/01/2011 1847
3-Nitroaniline	ND		1	2.0	0.77	ug/L	02/01/2011 1847
4,6-Dinitro-2-methylphenol	ND		1	5.0	1.5	ug/L	02/01/2011 1847
4-Bromophenyl phenyl ether	ND		1	1.0	0.12	ug/L	02/01/2011 1847
4-Chloro-3-methyl phenol	ND		1	1.0	0.22	ug/L	02/01/2011 1847
4-Chloroaniline	ND		1	1.0	0.13	ug/L	02/01/2011 1847
4-Chlorophenyl phenyl ether	ND		1	1.0	0.11	ug/L	02/01/2011 1847
4-Nitroaniline	ND		1	2.0	0.39	ug/L	02/01/2011 1847
4-Nitrophenol	ND		1	5.0	0.64	ug/L	02/01/2011 1847
Acenaphthene	ND		1	1.0	0.090	ug/L	02/01/2011 1847
Acenaphthylene	ND		1	1.0	0.16	ug/L	02/01/2011 1847
Anthracene	ND		1	1.0	0.13	ug/L	02/01/2011 1847
Benzo(a)anthracene	ND		1	1.0	0.15	ug/L	02/01/2011 1847
Benzo(a)pyrene	ND		1	1.0	0.16	ug/L	02/01/2011 1847
Benzo(b)fluoranthene	ND		1	1.0	0.20	ug/L	02/01/2011 1847
Benzo(g,h,i)perylene	ND		1	1.0	0.23	ug/L	02/01/2011 1847
Benzo(k)fluoranthene	ND		1	1.0	0.12	ug/L	02/01/2011 1847
bis(2-Chloroethoxy)methane	ND		1	1.0	0.13	ug/L	02/01/2011 1847
bis(2-Chloroisopropyl)ether	ND		1	1.0	0.080	ug/L	02/01/2011 1847
bis(2-Ethylhexyl)phthalate	ND		1	5.0	1.7	ug/L	02/01/2011 1847
Butyl benzyl phthalate	ND		1	5.0	1.7	ug/L	02/01/2011 1847
Carbazole	ND		1	1.0	0.25	ug/L	02/01/2011 1847
Chrysene	ND		1	1.0	0.12	ug/L	02/01/2011 1847
Di-n-butyl phthalate	ND		1	5.0	1.7	ug/L	02/01/2011 1847
Di-n-octylphthalate	ND		1	5.0	1.7	ug/L	02/01/2011 1847
Dibenzo(a,h)anthracene	ND		1	1.0	0.13	ug/L	02/01/2011 1847
Dibenzofuran	ND		1	1.0	0.16	ug/L	02/01/2011 1847
Diethylphthalate	ND		1	5.0	1.7	ug/L	02/01/2011 1847
Dimethyl phthalate	ND		1	5.0	1.7	ug/L	02/01/2011 1847
Fluoranthene	ND		1	1.0	0.21	ug/L	02/01/2011 1847

PQL = Practical quantitation limit
ND = Not detected at or above the MDL
P = The RPD between two GC columns exceeds 40%
J = Estimated result < PQL and ≥ MDL
N - Recovery is out of criteria
+ - RPD is out of criteria

Where applicable, all soil sample analysis are reported on a dry weight basis unless flagged with a "W"

Note: Calculations are performed before rounding to avoid round-off errors in calculated results

Semivolatile Organic Compounds by GC/MS - MB

Sample ID: MQ51601-001
Batch: 51601
Analytical Method: 8270D

Matrix: Aqueous
Prep Method: 3520C
Prep Date: 01/28/2011 1207

Parameter	Result	Q	Dil	PQL	MDL	Units	Analysis Date
Fluorene	ND		1	1.0	0.10	ug/L	02/01/2011 1847
Hexachlorobenzene	ND		1	1.0	0.21	ug/L	02/01/2011 1847
Hexachlorobutadiene	ND		1	1.0	0.090	ug/L	02/01/2011 1847
Hexachlorocyclopentadiene	ND		1	5.0	0.23	ug/L	02/01/2011 1847
Hexachloroethane	ND		1	1.0	0.11	ug/L	02/01/2011 1847
Indeno(1,2,3-c,d)pyrene	ND		1	1.0	0.23	ug/L	02/01/2011 1847
Isophorone	ND		1	1.0	0.080	ug/L	02/01/2011 1847
N-Nitrosodi-n-propylamine	ND		1	1.0	0.080	ug/L	02/01/2011 1847
N-Nitrosodiphenylamine (Diphenylamine)	ND		1	1.0	0.38	ug/L	02/01/2011 1847
Naphthalene	ND		1	1.0	0.070	ug/L	02/01/2011 1847
Nitrobenzene	ND		1	1.0	0.10	ug/L	02/01/2011 1847
Pentachlorophenol	ND		1	5.0	0.54	ug/L	02/01/2011 1847
Phenanthrene	ND		1	1.0	0.18	ug/L	02/01/2011 1847
Phenol	ND		1	1.0	0.11	ug/L	02/01/2011 1847
Pyrene	ND		1	1.0	0.16	ug/L	02/01/2011 1847

Surrogate	Q	% Rec	Acceptance Limit
2,4,6-Tribromophenol		71	41-144
2-Fluorobiphenyl		68	37-129
2-Fluorophenol		71	24-127
Nitrobenzene-d5		73	38-127
Phenol-d5		68	28-128
Terphenyl-d14		73	10-148

PQL = Practical quantitation limit
ND = Not detected at or above the MDL
P = The RPD between two GC columns exceeds 40%
J = Estimated result < PQL and ≥ MDL
N - Recovery is out of criteria
+ - RPD is out of criteria

Where applicable, all soil sample analysis are reported on a dry weight basis unless flagged with a "W"

Note: Calculations are performed before rounding to avoid round-off errors in calculated results

Semivolatile Organic Compounds by GC/MS - LCS

Sample ID: MQ51601-002
Batch: 51601
Analytical Method: 8270D

Matrix: Aqueous
Prep Method: 3520C
Prep Date: 01/28/2011 1207

Parameter	Spike Amount (ug/L)	Result (ug/L)	Q	Dil	% Rec	% Rec Limit	Analysis Date
2,4,5-Trichlorophenol	20	17		1	87	46-125	02/01/2011 1906
2,4,6-Trichlorophenol	20	16		1	82	36-123	02/01/2011 1906
2,4-Dichlorophenol	20	16		1	81	38-127	02/01/2011 1906
2,4-Dimethylphenol	20	16		1	80	36-110	02/01/2011 1906
2,4-Dinitrophenol	100	94		1	94	33-143	02/01/2011 1906
2,4-Dinitrotoluene	40	34		1	85	55-137	02/01/2011 1906
2,6-Dinitrotoluene	40	36		1	90	53-128	02/01/2011 1906
2-Chloronaphthalene	20	15		1	74	42-132	02/01/2011 1906
2-Chlorophenol	20	13		1	64	40-128	02/01/2011 1906
2-Methylnaphthalene	20	14		1	70	49-122	02/01/2011 1906
2-Methylphenol	20	16		1	80	33-122	02/01/2011 1906
2-Nitroaniline	40	35		1	87	48-126	02/01/2011 1906
2-Nitrophenol	40	29		1	72	44-131	02/01/2011 1906
3 & 4-Methylphenol	40	30		1	76	48-112	02/01/2011 1906
3-Nitroaniline	40	26		1	66	29-109	02/01/2011 1906
4,6-Dinitro-2-methylphenol	100	91		1	91	46-151	02/01/2011 1906
4-Bromophenyl phenyl ether	20	17		1	83	49-123	02/01/2011 1906
4-Chloro-3-methyl phenol	20	17		1	87	48-136	02/01/2011 1906
4-Chloroaniline	20	5.7		1	28	18-73	02/01/2011 1906
4-Chlorophenyl phenyl ether	20	16		1	82	34-124	02/01/2011 1906
4-Nitroaniline	40	32		1	81	42-154	02/01/2011 1906
4-Nitrophenol	100	83		1	83	43-145	02/01/2011 1906
Acenaphthene	20	16		1	79	51-130	02/01/2011 1906
Acenaphthylene	20	16		1	79	46-131	02/01/2011 1906
Anthracene	20	16		1	82	48-122	02/01/2011 1906
Benzo(a)anthracene	20	17		1	83	50-143	02/01/2011 1906
Benzo(a)pyrene	20	16		1	81	55-141	02/01/2011 1906
Benzo(b)fluoranthene	20	17		1	84	48-147	02/01/2011 1906
Benzo(g,h,i)perylene	20	15		1	73	48-139	02/01/2011 1906
Benzo(k)fluoranthene	20	17		1	87	48-148	02/01/2011 1906
bis(2-Chloroethoxy)methane	20	15		1	74	46-130	02/01/2011 1906
bis(2-Chloroisopropyl)ether	20	12		1	58	36-133	02/01/2011 1906
bis(2-Ethylhexyl)phthalate	20	16		1	81	40-141	02/01/2011 1906
Butyl benzyl phthalate	20	17		1	85	52-142	02/01/2011 1906
Carbazole	20	17		1	84	45-101	02/01/2011 1906
Chrysene	20	16		1	80	51-137	02/01/2011 1906
Di-n-butyl phthalate	20	17		1	87	50-134	02/01/2011 1906
Di-n-octylphthalate	20	18		1	89	50-136	02/01/2011 1906
Dibenzo(a,h)anthracene	20	16		1	80	48-139	02/01/2011 1906
Dibenzofuran	20	16		1	79	45-142	02/01/2011 1906
Diethylphthalate	20	17		1	83	48-124	02/01/2011 1906
Dimethyl phthalate	20	17		1	84	43-122	02/01/2011 1906
Fluoranthene	20	17		1	84	50-124	02/01/2011 1906
Fluorene	20	16		1	82	39-122	02/01/2011 1906

PQL = Practical quantitation limit
ND = Not detected at or above the MDL
P = The RPD between two GC columns exceeds 40%
J = Estimated result < PQL and ≥ MDL
N - Recovery is out of criteria
+ - RPD is out of criteria

Where applicable, all soil sample analysis are reported on a dry weight basis unless flagged with a "W"

Note: Calculations are performed before rounding to avoid round-off errors in calculated results

Semivolatile Organic Compounds by GC/MS - LCS

Sample ID: MQ51601-002
Batch: 51601
Analytical Method: 8270D

Matrix: Aqueous
Prep Method: 3520C
Prep Date: 01/28/2011 1207

Parameter	Spike Amount (ug/L)	Result (ug/L)	Q	Dil	% Rec	% Rec Limit	Analysis Date
Hexachlorobenzene	20	17		1	84	46-125	02/01/2011 1906
Hexachlorobutadiene	20	13		1	66	38-121	02/01/2011 1906
Hexachlorocyclopentadiene	100	51		1	51	24-110	02/01/2011 1906
Hexachloroethane	20	13		1	66	32-109	02/01/2011 1906
Indeno(1,2,3-c,d)pyrene	20	16		1	79	49-146	02/01/2011 1906
Isophorone	20	15		1	77	43-118	02/01/2011 1906
N-Nitrosodi-n-propylamine	20	14		1	70	46-135	02/01/2011 1906
N-Nitrosodiphenylamine (Diphenylamine)	20	19		1	96	44-124	02/01/2011 1906
Naphthalene	20	14		1	68	45-118	02/01/2011 1906
Nitrobenzene	20	14		1	71	46-131	02/01/2011 1906
Pentachlorophenol	100	82		1	82	30-137	02/01/2011 1906
Phenanthrene	20	16		1	82	49-122	02/01/2011 1906
Phenol	20	13		1	66	35-118	02/01/2011 1906
Pyrene	20	16		1	81	50-130	02/01/2011 1906

Surrogate	Q	% Rec	Acceptance Limit
2,4,6-Tribromophenol		96	41-144
2-Fluorobiphenyl		81	37-129
2-Fluorophenol		70	24-127
Nitrobenzene-d5		74	38-127
Phenol-d5		73	28-128
Terphenyl-d14		74	10-148

PQL = Practical quantitation limit
ND = Not detected at or above the MDL
P = The RPD between two GC columns exceeds 40%
J = Estimated result < PQL and ≥ MDL
N - Recovery is out of criteria
+ - RPD is out of criteria

Where applicable, all soil sample analysis are reported on a dry weight basis unless flagged with a "W"

Note: Calculations are performed before rounding to avoid round-off errors in calculated results

Semivolatile Organic Compounds by GC/MS - MS

Sample ID: MA26019-002MS
Batch: 51601
Analytical Method: 8270D

Matrix: Aqueous
Prep Method: 3520C
Prep Date: 01/28/2011 1207

Parameter	Sample Amount (ug/L)	Spike Amount (ug/L)	Result (ug/L)	Q	Dil	% Rec	% Rec Limit	Analysis Date
Acenaphthene	ND	40	29		1	73	10-133	02/01/2011 2005
Acenaphthylene	ND	40	29		1	72	34-128	02/01/2011 2005
Anthracene	ND	40	30		1	74	48-122	02/01/2011 2005
Benzo(a)anthracene	ND	40	24		1	60	53-98	02/01/2011 2005
Benzo(a)pyrene	ND	40	18		1	45	11-160	02/01/2011 2005
Benzo(b)fluoranthene	ND	40	19		1	47	10-165	02/01/2011 2005
Benzo(g,h,i)perylene	ND	40	12	N	1	30	42-111	02/01/2011 2005
Benzo(k)fluoranthene	ND	40	22		1	56	13-175	02/01/2011 2005
4-Bromophenyl phenyl ether	ND	40	30		1	74	49-123	02/01/2011 2005
Butyl benzyl phthalate	ND	40	30		1	74	52-142	02/01/2011 2005
Carbazole	ND	40	29		1	73	45-101	02/01/2011 2005
4-Chloro-3-methyl phenol	ND	40	33		1	82	40-98	02/01/2011 2005
4-Chloroaniline	ND	40	6.4		1	16	10-98	02/01/2011 2005
bis(2-Chloroethoxy)methane	ND	40	28		1	70	43-93	02/01/2011 2005
bis(2-Chloroisopropyl)ether	ND	40	21		1	53	36-99	02/01/2011 2005
2-Chloronaphthalene	ND	40	24		1	60	40-89	02/01/2011 2005
2-Chlorophenol	ND	40	24		1	60	33-92	02/01/2011 2005
4-Chlorophenyl phenyl ether	ND	40	30		1	76	34-124	02/01/2011 2005
Chrysene	ND	40	26		1	65	51-107	02/01/2011 2005
Dibenzo(a,h)anthracene	ND	40	12	N	1	29	47-116	02/01/2011 2005
Dibenzofuran	ND	40	29		1	73	45-94	02/01/2011 2005
2,4-Dichlorophenol	ND	40	30		1	76	34-105	02/01/2011 2005
Diethylphthalate	ND	40	31		1	78	48-124	02/01/2011 2005
Dimethyl phthalate	ND	40	31		1	77	43-122	02/01/2011 2005
2,4-Dimethylphenol	ND	40	34	N	1	84	33-77	02/01/2011 2005
Di-n-butyl phthalate	ND	40	30		1	75	50-134	02/01/2011 2005
4,6-Dinitro-2-methylphenol	ND	200	160		1	81	33-118	02/01/2011 2005
2,4-Dinitrophenol	ND	200	170		1	83	19-119	02/01/2011 2005
2,4-Dinitrotoluene	ND	80	63		1	79	50-104	02/01/2011 2005
2,6-Dinitrotoluene	ND	80	67		1	84	53-128	02/01/2011 2005
Di-n-octylphthalate	ND	40	7.0	N	1	18	40-112	02/01/2011 2005
bis(2-Ethylhexyl)phthalate	ND	40	6.8		1	17	10-142	02/01/2011 2005
Fluoranthene	ND	40	29		1	73	50-124	02/01/2011 2005
Fluorene	ND	40	30		1	76	39-122	02/01/2011 2005
Hexachlorobenzene	ND	40	29		1	72	46-125	02/01/2011 2005
Hexachlorobutadiene	ND	40	24		1	59	42-94	02/01/2011 2005
Hexachlorocyclopentadiene	ND	200	99		1	50	14-89	02/01/2011 2005
Hexachloroethane	ND	40	21		1	53	39-86	02/01/2011 2005
Indeno(1,2,3-c,d)pyrene	ND	40	12	N	1	31	43-113	02/01/2011 2005
Isophorone	ND	40	28		1	71	42-84	02/01/2011 2005
2-Methylnaphthalene	ND	40	27		1	68	46-90	02/01/2011 2005
2-Methylphenol	ND	40	34		1	85	33-122	02/01/2011 2005
3 & 4-Methylphenol	ND	80	56		1	71	24-97	02/01/2011 2005
Naphthalene	ND	40	25		1	63	46-89	02/01/2011 2005

PQL = Practical quantitation limit
ND = Not detected at or above the MDL
P = The RPD between two GC columns exceeds 40%
J = Estimated result < PQL and ≥ MDL
N - Recovery is out of criteria
+ - RPD is out of criteria

Where applicable, all soil sample analysis are reported on a dry weight basis unless flagged with a "W"

Note: Calculations are performed before rounding to avoid round-off errors in calculated results

Semivolatile Organic Compounds by GC/MS - MS

Sample ID: MA26019-002MS
Batch: 51601
Analytical Method: 8270D

Matrix: Aqueous
Prep Method: 3520C
Prep Date: 01/28/2011 1207

Parameter	Sample Amount (ug/L)	Spike Amount (ug/L)	Result (ug/L)	Q	Dil	% Rec	% Rec Limit	Analysis Date
2-Nitroaniline	ND	80	66		1	82	48-126	02/01/2011 2005
3-Nitroaniline	ND	80	39		1	49	10-110	02/01/2011 2005
4-Nitroaniline	ND	80	51		1	63	41-99	02/01/2011 2005
Nitrobenzene	ND	40	25		1	63	44-91	02/01/2011 2005
2-Nitrophenol	ND	80	54		1	68	34-102	02/01/2011 2005
4-Nitrophenol	ND	200	150		1	74	29-122	02/01/2011 2005
N-Nitrosodi-n-propylamine	ND	40	25		1	64	41-96	02/01/2011 2005
N-Nitrosodiphenylamine (Diphenylamine)	ND	40	34		1	86	10-150	02/01/2011 2005
Pentachlorophenol	ND	200	150		1	76	32-110	02/01/2011 2005
Phenanthrene	ND	40	29		1	73	49-122	02/01/2011 2005
Phenol	ND	40	26		1	64	33-92	02/01/2011 2005
Pyrene	ND	40	30		1	74	50-130	02/01/2011 2005
2,4,5-Trichlorophenol	ND	40	32		1	81	46-125	02/01/2011 2005
2,4,6-Trichlorophenol	ND	40	29		1	73	36-123	02/01/2011 2005

Surrogate	Q	% Rec	Acceptance Limit
2-Fluorobiphenyl		75	37-129
2-Fluorophenol		62	24-127
Nitrobenzene-d5		67	38-127
Phenol-d5		69	28-128
Terphenyl-d14		52	10-148
2,4,6-Tribromophenol		87	41-144

PQL = Practical quantitation limit
ND = Not detected at or above the MDL
P = The RPD between two GC columns exceeds 40%
J = Estimated result < PQL and ≥ MDL
N - Recovery is out of criteria
+ - RPD is out of criteria

Where applicable, all soil sample analysis are reported on a dry weight basis unless flagged with a "W"

Note: Calculations are performed before rounding to avoid round-off errors in calculated results

Semivolatile Organic Compounds by GC/MS - MSD

Sample ID: MA26019-002MD
Batch: 51601
Analytical Method: 8270D

Matrix: Aqueous
Prep Method: 3520C
Prep Date: 01/28/2011 1207

Parameter	Sample Amount (ug/L)	Spike Amount (ug/L)	Result (ug/L)	Q	Dil	% Rec	% RPD	% Rec Limit	% RPD Limit	Analysis Date
Acenaphthene	ND	40	29		1	73	0.073	10-133	40	02/01/2011 2024
Acenaphthylene	ND	40	28		1	70	3.9	34-128	40	02/01/2011 2024
Anthracene	ND	40	29		1	73	2.4	48-122	40	02/01/2011 2024
Benzo(a)anthracene	ND	40	18	N	1	46	27	53-98	40	02/01/2011 2024
Benzo(a)pyrene	ND	40	7.7	+	1	19	80	11-160	40	02/01/2011 2024
Benzo(b)fluoranthene	ND	40	7.7	+	1	19	84	10-165	40	02/01/2011 2024
Benzo(g,h,i)perylene	ND	40	4.9	N,+	1	12	84	42-111	40	02/01/2011 2024
Benzo(k)fluoranthene	ND	40	17		1	43	27	13-175	40	02/01/2011 2024
4-Bromophenyl phenyl ether	ND	40	29		1	74	0.49	49-123	40	02/01/2011 2024
Butyl benzyl phthalate	ND	40	28		1	70	6.1	52-142	40	02/01/2011 2024
Carbazole	ND	40	30		1	75	2.2	45-101	40	02/01/2011 2024
4-Chloro-3-methyl phenol	ND	40	33		1	83	1.7	40-98	40	02/01/2011 2024
4-Chloroaniline	ND	40	9.8	+	1	24	42	10-98	40	02/01/2011 2024
bis(2-Chloroethoxy)methane	ND	40	30		1	74	6.7	43-93	40	02/01/2011 2024
bis(2-Chloroisopropyl)ether	ND	40	22		1	56	5.0	36-99	40	02/01/2011 2024
2-Chloronaphthalene	ND	40	23		1	58	3.9	40-89	40	02/01/2011 2024
2-Chlorophenol	ND	40	25		1	63	4.7	33-92	40	02/01/2011 2024
4-Chlorophenyl phenyl ether	ND	40	30		1	74	1.8	34-124	40	02/01/2011 2024
Chrysene	ND	40	20	N	1	50	27	51-107	40	02/01/2011 2024
Dibenzo(a,h)anthracene	ND	40	5.4	N,+	1	14	73	47-116	40	02/01/2011 2024
Dibenzofuran	ND	40	29		1	71	1.9	45-94	40	02/01/2011 2024
2,4-Dichlorophenol	ND	40	31		1	78	1.6	34-105	40	02/01/2011 2024
Diethylphthalate	ND	40	32		1	79	2.0	48-124	40	02/01/2011 2024
Dimethyl phthalate	ND	40	31		1	77	0.32	43-122	40	02/01/2011 2024
2,4-Dimethylphenol	ND	40	35	N	1	88	4.2	33-77	40	02/01/2011 2024
Di-n-butyl phthalate	ND	40	30		1	74	1.6	50-134	40	02/01/2011 2024
4,6-Dinitro-2-methylphenol	ND	200	160		1	79	2.5	33-118	40	02/01/2011 2024
2,4-Dinitrophenol	ND	200	170		1	86	3.8	19-119	40	02/01/2011 2024
2,4-Dinitrotoluene	ND	80	64		1	80	1.2	50-104	40	02/01/2011 2024
2,6-Dinitrotoluene	ND	80	66		1	83	1.4	53-128	40	02/01/2011 2024
Di-n-octylphthalate	ND	40	1.8	N,+	1	4.6	120	40-112	40	02/01/2011 2024
bis(2-Ethylhexyl)phthalate	ND	40	2.5	N,+	1	6.3	92	10-142	40	02/01/2011 2024
Fluoranthene	ND	40	28		1	69	4.9	50-124	40	02/01/2011 2024
Fluorene	ND	40	30		1	76	0.017	39-122	40	02/01/2011 2024
Hexachlorobenzene	ND	40	25		1	62	15	46-125	40	02/01/2011 2024
Hexachlorobutadiene	ND	40	26		1	64	7.2	42-94	40	02/01/2011 2024
Hexachlorocyclopentadiene	ND	200	120		1	58	16	14-89	40	02/01/2011 2024
Hexachloroethane	ND	40	23		1	57	7.2	39-86	40	02/01/2011 2024
Indeno(1,2,3-c,d)pyrene	ND	40	5.4	N,+	1	14	78	43-113	40	02/01/2011 2024
Isophorone	ND	40	30		1	76	6.7	42-84	40	02/01/2011 2024
2-Methylnaphthalene	ND	40	28		1	70	3.1	46-90	40	02/01/2011 2024
2-Methylphenol	ND	40	33		1	82	4.2	33-122	40	02/01/2011 2024
3 & 4-Methylphenol	ND	80	53		1	66	6.1	24-97	40	02/01/2011 2024
Naphthalene	ND	40	27		1	67	5.1	46-89	40	02/01/2011 2024

PQL = Practical quantitation limit
ND = Not detected at or above the MDL
P = The RPD between two GC columns exceeds 40%
J = Estimated result < PQL and ≥ MDL
N - Recovery is out of criteria
+ - RPD is out of criteria

Where applicable, all soil sample analysis are reported on a dry weight basis unless flagged with a "W"

Note: Calculations are performed before rounding to avoid round-off errors in calculated results

Semivolatile Organic Compounds by GC/MS - MSD

Sample ID: MA26019-002MD
Batch: 51601
Analytical Method: 8270D

Matrix: Aqueous
Prep Method: 3520C
Prep Date: 01/28/2011 1207

Parameter	Sample Amount (ug/L)	Spike Amount (ug/L)	Result (ug/L)	Q	Dil	% Rec	% RPD	% Rec Limit	% RPD Limit	Analysis Date
2-Nitroaniline	ND	80	65		1	81	1.0	48-126	40	02/01/2011 2024
3-Nitroaniline	ND	80	45		1	56	13	10-110	40	02/01/2011 2024
4-Nitroaniline	ND	80	54		1	67	6.2	41-99	40	02/01/2011 2024
Nitrobenzene	ND	40	27		1	67	5.3	44-91	40	02/01/2011 2024
2-Nitrophenol	ND	80	58		1	72	5.9	34-102	40	02/01/2011 2024
4-Nitrophenol	ND	200	150		1	75	0.83	29-122	40	02/01/2011 2024
N-Nitrosodi-n-propylamine	ND	40	26		1	65	1.4	41-96	40	02/01/2011 2024
N-Nitrosodiphenylamine (Diphenylamine)	ND	40	29		1	73	16	10-150	40	02/01/2011 2024
Pentachlorophenol	ND	200	150		1	77	2.0	32-110	40	02/01/2011 2024
Phenanthrene	ND	40	29		1	72	2.3	49-122	40	02/01/2011 2024
Phenol	ND	40	26		1	66	2.6	33-92	40	02/01/2011 2024
Pyrene	ND	40	28		1	69	6.1	50-130	40	02/01/2011 2024
2,4,5-Trichlorophenol	ND	40	33		1	83	3.2	46-125	40	02/01/2011 2024
2,4,6-Trichlorophenol	ND	40	29		1	72	1.2	36-123	40	02/01/2011 2024

Surrogate	Q	% Rec	Acceptance Limit
2-Fluorobiphenyl		74	37-129
2-Fluorophenol		67	24-127
Nitrobenzene-d5		71	38-127
Phenol-d5		71	28-128
Terphenyl-d14		32	10-148
2,4,6-Tribromophenol		87	41-144

PQL = Practical quantitation limit
ND = Not detected at or above the MDL
P = The RPD between two GC columns exceeds 40%
J = Estimated result < PQL and ≥ MDL
N - Recovery is out of criteria
+ - RPD is out of criteria

Where applicable, all soil sample analysis are reported on a dry weight basis unless flagged with a "W"

Note: Calculations are performed before rounding to avoid round-off errors in calculated results

Semivolatile Organic Compounds by GC/MS - MB

Sample ID: MQ51711-001
Batch: 51711
Analytical Method: 8270D

Matrix: Aqueous
Prep Method: 3520C
Prep Date: 01/31/2011 1400

Parameter	Result	Q	Dil	PQL	MDL	Units	Analysis Date
2,4,5-Trichlorophenol	ND		1	1.0	0.18	ug/L	02/02/2011 1243
2,4,6-Trichlorophenol	ND		1	1.0	0.22	ug/L	02/02/2011 1243
2,4-Dichlorophenol	ND		1	1.0	0.15	ug/L	02/02/2011 1243
2,4-Dimethylphenol	ND		1	1.0	0.31	ug/L	02/02/2011 1243
2,4-Dinitrophenol	ND		1	5.0	0.25	ug/L	02/02/2011 1243
2,4-Dinitrotoluene	ND		1	2.0	0.45	ug/L	02/02/2011 1243
2,6-Dinitrotoluene	ND		1	2.0	0.40	ug/L	02/02/2011 1243
2-Chloronaphthalene	ND		1	1.0	0.12	ug/L	02/02/2011 1243
2-Chlorophenol	ND		1	1.0	0.13	ug/L	02/02/2011 1243
2-Methylnaphthalene	ND		1	1.0	0.080	ug/L	02/02/2011 1243
2-Methylphenol	ND		1	1.0	0.17	ug/L	02/02/2011 1243
2-Nitroaniline	ND		1	2.0	0.55	ug/L	02/02/2011 1243
2-Nitrophenol	ND		1	2.0	0.27	ug/L	02/02/2011 1243
3 & 4-Methylphenol	ND		1	2.0	0.57	ug/L	02/02/2011 1243
3,3'-Dichlorobenzidine	ND		1	5.0	0.81	ug/L	02/02/2011 1243
3-Nitroaniline	ND		1	2.0	0.77	ug/L	02/02/2011 1243
4,6-Dinitro-2-methylphenol	ND		1	5.0	1.5	ug/L	02/02/2011 1243
4-Bromophenyl phenyl ether	ND		1	1.0	0.12	ug/L	02/02/2011 1243
4-Chloro-3-methyl phenol	ND		1	1.0	0.22	ug/L	02/02/2011 1243
4-Chloroaniline	ND		1	1.0	0.13	ug/L	02/02/2011 1243
4-Chlorophenyl phenyl ether	ND		1	1.0	0.11	ug/L	02/02/2011 1243
4-Nitroaniline	ND		1	2.0	0.39	ug/L	02/02/2011 1243
4-Nitrophenol	ND		1	5.0	0.64	ug/L	02/02/2011 1243
Acenaphthene	ND		1	1.0	0.090	ug/L	02/02/2011 1243
Acenaphthylene	ND		1	1.0	0.16	ug/L	02/02/2011 1243
Anthracene	ND		1	1.0	0.13	ug/L	02/02/2011 1243
Benzo(a)anthracene	ND		1	1.0	0.15	ug/L	02/02/2011 1243
Benzo(a)pyrene	ND		1	1.0	0.16	ug/L	02/02/2011 1243
Benzo(b)fluoranthene	ND		1	1.0	0.20	ug/L	02/02/2011 1243
Benzo(g,h,i)perylene	ND		1	1.0	0.23	ug/L	02/02/2011 1243
Benzo(k)fluoranthene	ND		1	1.0	0.12	ug/L	02/02/2011 1243
bis(2-Chloroethoxy)methane	ND		1	1.0	0.13	ug/L	02/02/2011 1243
bis(2-Chloroisopropyl)ether	ND		1	1.0	0.080	ug/L	02/02/2011 1243
bis(2-Ethylhexyl)phthalate	ND		1	5.0	1.7	ug/L	02/02/2011 1243
Butyl benzyl phthalate	ND		1	5.0	1.7	ug/L	02/02/2011 1243
Carbazole	ND		1	1.0	0.25	ug/L	02/02/2011 1243
Chrysene	ND		1	1.0	0.12	ug/L	02/02/2011 1243
Di-n-butyl phthalate	ND		1	5.0	1.7	ug/L	02/02/2011 1243
Di-n-octylphthalate	ND		1	5.0	1.7	ug/L	02/02/2011 1243
Dibenzo(a,h)anthracene	ND		1	1.0	0.13	ug/L	02/02/2011 1243
Dibenzofuran	ND		1	1.0	0.16	ug/L	02/02/2011 1243
Diethylphthalate	ND		1	5.0	1.7	ug/L	02/02/2011 1243
Dimethyl phthalate	ND		1	5.0	1.7	ug/L	02/02/2011 1243
Fluoranthene	ND		1	1.0	0.21	ug/L	02/02/2011 1243

PQL = Practical quantitation limit
ND = Not detected at or above the MDL
P = The RPD between two GC columns exceeds 40%
J = Estimated result < PQL and ≥ MDL
N - Recovery is out of criteria
+ - RPD is out of criteria

Where applicable, all soil sample analysis are reported on a dry weight basis unless flagged with a "W"

Note: Calculations are performed before rounding to avoid round-off errors in calculated results

Semivolatile Organic Compounds by GC/MS - MB

Sample ID: MQ51711-001
Batch: 51711
Analytical Method: 8270D

Matrix: Aqueous
Prep Method: 3520C
Prep Date: 01/31/2011 1400

Parameter	Result	Q	Dil	PQL	MDL	Units	Analysis Date
Fluorene	ND		1	1.0	0.10	ug/L	02/02/2011 1243
Hexachlorobenzene	ND		1	1.0	0.21	ug/L	02/02/2011 1243
Hexachlorobutadiene	ND		1	1.0	0.090	ug/L	02/02/2011 1243
Hexachlorocyclopentadiene	ND		1	5.0	0.23	ug/L	02/02/2011 1243
Hexachloroethane	ND		1	1.0	0.11	ug/L	02/02/2011 1243
Indeno(1,2,3-c,d)pyrene	ND		1	1.0	0.23	ug/L	02/02/2011 1243
Isophorone	ND		1	1.0	0.080	ug/L	02/02/2011 1243
N-Nitrosodi-n-propylamine	ND		1	1.0	0.080	ug/L	02/02/2011 1243
N-Nitrosodiphenylamine (Diphenylamine)	ND		1	1.0	0.38	ug/L	02/02/2011 1243
Naphthalene	0.12	J	1	1.0	0.070	ug/L	02/02/2011 1243
Nitrobenzene	ND		1	1.0	0.10	ug/L	02/02/2011 1243
Pentachlorophenol	ND		1	5.0	0.54	ug/L	02/02/2011 1243
Phenanthrene	ND		1	1.0	0.18	ug/L	02/02/2011 1243
Phenol	ND		1	1.0	0.11	ug/L	02/02/2011 1243
Pyrene	ND		1	1.0	0.16	ug/L	02/02/2011 1243

Surrogate	Q	% Rec	Acceptance Limit
2,4,6-Tribromophenol		73	41-144
2-Fluorobiphenyl		78	37-129
2-Fluorophenol		70	24-127
Nitrobenzene-d5		81	38-127
Phenol-d5		90	28-128
Terphenyl-d14		64	10-148

PQL = Practical quantitation limit
ND = Not detected at or above the MDL
P = The RPD between two GC columns exceeds 40%
J = Estimated result < PQL and ≥ MDL
N - Recovery is out of criteria
+ - RPD is out of criteria

Where applicable, all soil sample analysis are reported on a dry weight basis unless flagged with a "W"

Note: Calculations are performed before rounding to avoid round-off errors in calculated results

Semivolatile Organic Compounds by GC/MS - LCS

Sample ID: MQ51711-002
Batch: 51711
Analytical Method: 8270D

Matrix: Aqueous
Prep Method: 3520C
Prep Date: 01/31/2011 1400

Parameter	Spike Amount (ug/L)	Result (ug/L)	Q	Dil	% Rec	% Rec Limit	Analysis Date
2,4,5-Trichlorophenol	20	13		1	66	46-125	02/02/2011 1302
2,4,6-Trichlorophenol	20	16		1	81	36-123	02/02/2011 1302
2,4-Dichlorophenol	20	15		1	76	38-127	02/02/2011 1302
2,4-Dimethylphenol	20	15		1	76	36-110	02/02/2011 1302
2,4-Dinitrophenol	100	75		1	75	33-143	02/02/2011 1302
2,4-Dinitrotoluene	40	30		1	75	55-137	02/02/2011 1302
2,6-Dinitrotoluene	40	30		1	75	53-128	02/02/2011 1302
2-Chloronaphthalene	20	15		1	73	42-132	02/02/2011 1302
2-Chlorophenol	20	14		1	68	40-128	02/02/2011 1302
2-Methylnaphthalene	20	14		1	68	49-122	02/02/2011 1302
2-Methylphenol	20	15		1	73	33-122	02/02/2011 1302
2-Nitroaniline	40	29		1	73	48-126	02/02/2011 1302
2-Nitrophenol	40	27		1	68	44-131	02/02/2011 1302
3 & 4-Methylphenol	40	35		1	87	48-112	02/02/2011 1302
3-Nitroaniline	40	25		1	62	29-109	02/02/2011 1302
4,6-Dinitro-2-methylphenol	100	81		1	81	46-151	02/02/2011 1302
4-Bromophenyl phenyl ether	20	14		1	70	49-123	02/02/2011 1302
4-Chloro-3-methyl phenol	20	15		1	75	48-136	02/02/2011 1302
4-Chloroaniline	20	4.0		1	20	18-73	02/02/2011 1302
4-Chlorophenyl phenyl ether	20	15		1	73	34-124	02/02/2011 1302
4-Nitroaniline	40	33		1	81	42-154	02/02/2011 1302
4-Nitrophenol	100	83		1	83	43-145	02/02/2011 1302
Acenaphthene	20	14		1	71	51-130	02/02/2011 1302
Acenaphthylene	20	14		1	71	46-131	02/02/2011 1302
Anthracene	20	14		1	68	48-122	02/02/2011 1302
Benzo(a)anthracene	20	15		1	75	50-143	02/02/2011 1302
Benzo(a)pyrene	20	11	N	1	54	55-141	02/02/2011 1302
Benzo(b)fluoranthene	20	14		1	68	48-147	02/02/2011 1302
Benzo(g,h,i)perylene	20	13		1	64	48-139	02/02/2011 1302
Benzo(k)fluoranthene	20	11		1	56	48-148	02/02/2011 1302
bis(2-Chloroethoxy)methane	20	15		1	73	46-130	02/02/2011 1302
bis(2-Chloroisopropyl)ether	20	12		1	59	36-133	02/02/2011 1302
bis(2-Ethylhexyl)phthalate	20	13		1	63	40-141	02/02/2011 1302
Butyl benzyl phthalate	20	15		1	74	52-142	02/02/2011 1302
Carbazole	20	15		1	75	45-101	02/02/2011 1302
Chrysene	20	12		1	61	51-137	02/02/2011 1302
Di-n-butyl phthalate	20	15		1	75	50-134	02/02/2011 1302
Di-n-octylphthalate	20	13		1	66	50-136	02/02/2011 1302
Dibenzo(a,h)anthracene	20	12		1	62	48-139	02/02/2011 1302
Dibenzofuran	20	14		1	72	45-142	02/02/2011 1302
Diethylphthalate	20	15		1	74	48-124	02/02/2011 1302
Dimethyl phthalate	20	14		1	72	43-122	02/02/2011 1302
Fluoranthene	20	14		1	72	50-124	02/02/2011 1302
Fluorene	20	15		1	73	39-122	02/02/2011 1302

PQL = Practical quantitation limit
ND = Not detected at or above the MDL
P = The RPD between two GC columns exceeds 40%
J = Estimated result < PQL and ≥ MDL
N - Recovery is out of criteria
+ - RPD is out of criteria

Where applicable, all soil sample analysis are reported on a dry weight basis unless flagged with a "W"

Note: Calculations are performed before rounding to avoid round-off errors in calculated results

Semivolatile Organic Compounds by GC/MS - LCS

Sample ID: MQ51711-002
Batch: 51711
Analytical Method: 8270D

Matrix: Aqueous
Prep Method: 3520C
Prep Date: 01/31/2011 1400

Parameter	Spike Amount (ug/L)	Result (ug/L)	Q	Dil	% Rec	% Rec Limit	Analysis Date
Hexachlorobenzene	20	13		1	67	46-125	02/02/2011 1302
Hexachlorobutadiene	20	12		1	59	38-121	02/02/2011 1302
Hexachlorocyclopentadiene	100	49		1	49	24-110	02/02/2011 1302
Hexachloroethane	20	11		1	55	32-109	02/02/2011 1302
Indeno(1,2,3-c,d)pyrene	20	12		1	59	49-146	02/02/2011 1302
Isophorone	20	14		1	71	43-118	02/02/2011 1302
N-Nitrosodi-n-propylamine	20	14		1	70	46-135	02/02/2011 1302
N-Nitrosodiphenylamine (Diphenylamine)	20	16		1	79	44-124	02/02/2011 1302
Naphthalene	20	13		1	67	45-118	02/02/2011 1302
Nitrobenzene	20	15		1	73	46-131	02/02/2011 1302
Pentachlorophenol	100	82		1	82	30-137	02/02/2011 1302
Phenanthrene	20	15		1	73	49-122	02/02/2011 1302
Phenol	20	16		1	79	35-118	02/02/2011 1302
Pyrene	20	14		1	70	50-130	02/02/2011 1302

Surrogate	Q	% Rec	Acceptance Limit
2,4,6-Tribromophenol		79	41-144
2-Fluorobiphenyl		76	37-129
2-Fluorophenol		68	24-127
Nitrobenzene-d5		74	38-127
Phenol-d5		87	28-128
Terphenyl-d14		62	10-148

PQL = Practical quantitation limit
ND = Not detected at or above the MDL
P = The RPD between two GC columns exceeds 40%
J = Estimated result < PQL and ≥ MDL
N - Recovery is out of criteria
+ - RPD is out of criteria

Where applicable, all soil sample analysis are reported on a dry weight basis unless flagged with a "W"

Note: Calculations are performed before rounding to avoid round-off errors in calculated results

Semivolatile Organic Compounds by GC/MS - MS

Sample ID: MA26019-015MS
Batch: 51711
Analytical Method: 8270D

Matrix: Aqueous
Prep Method: 3520C
Prep Date: 01/31/2011 1400

Parameter	Sample Amount (ug/L)	Spike Amount (ug/L)	Result (ug/L)	Q	Dil	% Rec	% Rec Limit	Analysis Date
Acenaphthene	ND	40	22		1	54	10-133	02/02/2011 2045
Acenaphthylene	ND	40	21		1	52	34-128	02/02/2011 2045
Anthracene	ND	40	22		1	55	48-122	02/02/2011 2045
Benzo(a)anthracene	ND	40	11	N	1	27	53-98	02/02/2011 2045
Benzo(a)pyrene	ND	40	6.6		1	17	11-160	02/02/2011 2045
Benzo(b)fluoranthene	ND	40	6.0		1	15	10-165	02/02/2011 2045
Benzo(g,h,i)perylene	ND	40	3.6	N	1	8.9	42-111	02/02/2011 2045
Benzo(k)fluoranthene	ND	40	9.9		1	25	13-175	02/02/2011 2045
4-Bromophenyl phenyl ether	ND	40	22		1	56	49-123	02/02/2011 2045
Butyl benzyl phthalate	ND	40	20	N	1	49	52-142	02/02/2011 2045
Carbazole	ND	40	24		1	61	45-101	02/02/2011 2045
4-Chloro-3-methyl phenol	ND	40	23		1	58	40-98	02/02/2011 2045
4-Chloroaniline	ND	40	4.1		1	10	10-98	02/02/2011 2045
bis(2-Chloroethoxy)methane	ND	40	20		1	51	43-93	02/02/2011 2045
bis(2-Chloroisopropyl)ether	ND	40	20		1	49	36-99	02/02/2011 2045
2-Chloronaphthalene	ND	40	16	N	1	39	40-89	02/02/2011 2045
2-Chlorophenol	ND	40	21		1	54	33-92	02/02/2011 2045
4-Chlorophenyl phenyl ether	ND	40	22		1	56	34-124	02/02/2011 2045
Chrysene	ND	40	13	N	1	33	51-107	02/02/2011 2045
Dibenzo(a,h)anthracene	ND	40	3.6	N	1	9.0	47-116	02/02/2011 2045
Dibenzofuran	ND	40	22		1	55	45-94	02/02/2011 2045
2,4-Dichlorophenol	ND	40	19		1	48	34-105	02/02/2011 2045
Diethylphthalate	ND	40	26		1	64	48-124	02/02/2011 2045
Dimethyl phthalate	ND	40	24		1	60	43-122	02/02/2011 2045
2,4-Dimethylphenol	ND	40	19		1	48	33-77	02/02/2011 2045
Di-n-butyl phthalate	ND	40	22		1	56	50-134	02/02/2011 2045
4,6-Dinitro-2-methylphenol	ND	200	140		1	71	33-118	02/02/2011 2045
2,4-Dinitrophenol	ND	200	140		1	70	19-119	02/02/2011 2045
2,4-Dinitrotoluene	ND	80	52		1	65	50-104	02/02/2011 2045
2,6-Dinitrotoluene	ND	80	49		1	61	53-128	02/02/2011 2045
Di-n-octylphthalate	ND	40	1.8	N	1	4.6	40-112	02/02/2011 2045
bis(2-Ethylhexyl)phthalate	ND	40	2.2	N	1	5.5	10-142	02/02/2011 2045
Fluoranthene	ND	40	22		1	55	50-124	02/02/2011 2045
Fluorene	ND	40	24		1	59	39-122	02/02/2011 2045
Hexachlorobenzene	ND	40	20		1	50	46-125	02/02/2011 2045
Hexachlorobutadiene	ND	40	20		1	51	42-94	02/02/2011 2045
Hexachlorocyclopentadiene	ND	200	90		1	45	14-89	02/02/2011 2045
Hexachloroethane	ND	40	21		1	52	39-86	02/02/2011 2045
Indeno(1,2,3-c,d)pyrene	ND	40	3.7	N	1	9.4	43-113	02/02/2011 2045
Isophorone	ND	40	17		1	43	42-84	02/02/2011 2045
2-Methylnaphthalene	ND	40	20		1	49	46-90	02/02/2011 2045
2-Methylphenol	ND	40	17		1	42	33-122	02/02/2011 2045
3 & 4-Methylphenol	ND	80	37		1	46	24-97	02/02/2011 2045
Naphthalene	ND	40	22		1	55	46-89	02/02/2011 2045

PQL = Practical quantitation limit
ND = Not detected at or above the MDL
P = The RPD between two GC columns exceeds 40%
J = Estimated result < PQL and ≥ MDL
N - Recovery is out of criteria
+ - RPD is out of criteria

Where applicable, all soil sample analysis are reported on a dry weight basis unless flagged with a "W"

Note: Calculations are performed before rounding to avoid round-off errors in calculated results

Semivolatile Organic Compounds by GC/MS - MS

Sample ID: MA26019-015MS
Batch: 51711
Analytical Method: 8270D

Matrix: Aqueous
Prep Method: 3520C
Prep Date: 01/31/2011 1400

Parameter	Sample Amount (ug/L)	Spike Amount (ug/L)	Result (ug/L)	Q	Dil	% Rec	% Rec Limit	Analysis Date
2-Nitroaniline	ND	80	47		1	59	48-126	02/02/2011 2045
3-Nitroaniline	ND	80	27		1	34	10-110	02/02/2011 2045
4-Nitroaniline	ND	80	45		1	56	41-99	02/02/2011 2045
Nitrobenzene	ND	40	22		1	55	44-91	02/02/2011 2045
2-Nitrophenol	ND	80	43		1	53	34-102	02/02/2011 2045
4-Nitrophenol	ND	200	120		1	61	29-122	02/02/2011 2045
N-Nitrosodi-n-propylamine	ND	40	19		1	48	41-96	02/02/2011 2045
N-Nitrosodiphenylamine (Diphenylamine)	ND	40	23		1	58	10-150	02/02/2011 2045
Pentachlorophenol	ND	200	140		1	71	32-110	02/02/2011 2045
Phenanthrene	ND	40	24		1	59	49-122	02/02/2011 2045
Phenol	ND	40	22		1	54	33-92	02/02/2011 2045
Pyrene	ND	40	19	N	1	48	50-130	02/02/2011 2045
2,4,5-Trichlorophenol	ND	40	22		1	55	46-125	02/02/2011 2045
2,4,6-Trichlorophenol	ND	40	21		1	53	36-123	02/02/2011 2045

Surrogate	Q	% Rec	Acceptance Limit
2-Fluorobiphenyl		52	37-129
2-Fluorophenol		57	24-127
Nitrobenzene-d5		58	38-127
Phenol-d5		57	28-128
Terphenyl-d14		23	10-148
2,4,6-Tribromophenol		66	41-144

PQL = Practical quantitation limit
ND = Not detected at or above the MDL
P = The RPD between two GC columns exceeds 40%
J = Estimated result < PQL and ≥ MDL
N - Recovery is out of criteria
+ - RPD is out of criteria

Where applicable, all soil sample analysis are reported on a dry weight basis unless flagged with a "W"

Note: Calculations are performed before rounding to avoid round-off errors in calculated results

Semivolatile Organic Compounds by GC/MS - MSD

Sample ID: MA26019-015MD
Batch: 51711
Analytical Method: 8270D

Matrix: Aqueous
Prep Method: 3520C
Prep Date: 01/31/2011 1400

Parameter	Sample Amount (ug/L)	Spike Amount (ug/L)	Result (ug/L)	Q	Dil	% Rec	% RPD	% Rec Limit	% RPD Limit	Analysis Date
Acenaphthene	ND	41	25		1	61	13	10-133	40	02/02/2011 2104
Acenaphthylene	ND	41	24		1	58	13	34-128	40	02/02/2011 2104
Anthracene	ND	41	23		1	56	4.3	48-122	40	02/02/2011 2104
Benzo(a)anthracene	ND	41	10	N	1	25	6.1	53-98	40	02/02/2011 2104
Benzo(a)pyrene	ND	41	4.9		1	12	31	11-160	40	02/02/2011 2104
Benzo(b)fluoranthene	ND	41	4.3		1	11	32	10-165	40	02/02/2011 2104
Benzo(g,h,i)perylene	ND	41	2.3	N,+	1	5.7	42	42-111	40	02/02/2011 2104
Benzo(k)fluoranthene	ND	41	7.3		1	18	30	13-175	40	02/02/2011 2104
4-Bromophenyl phenyl ether	ND	41	24		1	59	7.4	49-123	40	02/02/2011 2104
Butyl benzyl phthalate	ND	41	20	N	1	49	2.3	52-142	40	02/02/2011 2104
Carbazole	ND	41	24		1	60	1.0	45-101	40	02/02/2011 2104
4-Chloro-3-methyl phenol	ND	41	26		1	64	11	40-98	40	02/02/2011 2104
4-Chloroaniline	ND	41	3.1	N	1	7.5	28	10-98	40	02/02/2011 2104
bis(2-Chloroethoxy)methane	ND	41	25		1	60	19	43-93	40	02/02/2011 2104
bis(2-Chloroisopropyl)ether	ND	41	23		1	55	14	36-99	40	02/02/2011 2104
2-Chloronaphthalene	ND	41	18		1	45	16	40-89	40	02/02/2011 2104
2-Chlorophenol	ND	41	25		1	60	13	33-92	40	02/02/2011 2104
4-Chlorophenyl phenyl ether	ND	41	25		1	60	9.6	34-124	40	02/02/2011 2104
Chrysene	ND	41	13	N	1	31	4.9	51-107	40	02/02/2011 2104
Dibenzo(a,h)anthracene	ND	41	2.2	N,+	1	5.4	48	47-116	40	02/02/2011 2104
Dibenzofuran	ND	41	25		1	60	11	45-94	40	02/02/2011 2104
2,4-Dichlorophenol	ND	41	22		1	55	16	34-105	40	02/02/2011 2104
Diethylphthalate	ND	41	26		1	64	1.3	48-124	40	02/02/2011 2104
Dimethyl phthalate	ND	41	26		1	63	6.7	43-122	40	02/02/2011 2104
2,4-Dimethylphenol	ND	41	26		1	64	31	33-77	40	02/02/2011 2104
Di-n-butyl phthalate	ND	41	22		1	55	0.32	50-134	40	02/02/2011 2104
4,6-Dinitro-2-methylphenol	ND	200	140		1	71	1.5	33-118	40	02/02/2011 2104
2,4-Dinitrophenol	ND	200	140		1	69	1.6	19-119	40	02/02/2011 2104
2,4-Dinitrotoluene	ND	82	53		1	65	1.6	50-104	40	02/02/2011 2104
2,6-Dinitrotoluene	ND	82	52		1	64	7.2	53-128	40	02/02/2011 2104
Di-n-octylphthalate	ND	41	0.87	N,+	1	2.1	71	40-112	40	02/02/2011 2104
bis(2-Ethylhexyl)phthalate	ND	41	1.3	N,+	1	3.1	54	10-142	40	02/02/2011 2104
Fluoranthene	ND	41	22		1	53	0.55	50-124	40	02/02/2011 2104
Fluorene	ND	41	26		1	64	9.0	39-122	40	02/02/2011 2104
Hexachlorobenzene	ND	41	21		1	52	5.4	46-125	40	02/02/2011 2104
Hexachlorobutadiene	ND	41	24		1	58	15	42-94	40	02/02/2011 2104
Hexachlorocyclopentadiene	ND	200	100		1	49	11	14-89	40	02/02/2011 2104
Hexachloroethane	ND	41	24		1	58	12	39-86	40	02/02/2011 2104
Indeno(1,2,3-c,d)pyrene	ND	41	2.4	N,+	1	5.9	44	43-113	40	02/02/2011 2104
Isophorone	ND	41	20		1	50	17	42-84	40	02/02/2011 2104
2-Methylnaphthalene	ND	41	23		1	57	17	46-90	40	02/02/2011 2104
2-Methylphenol	ND	41	20		1	50	20	33-122	40	02/02/2011 2104
3 & 4-Methylphenol	ND	82	44		1	54	18	24-97	40	02/02/2011 2104
Naphthalene	ND	41	25		1	61	14	46-89	40	02/02/2011 2104

PQL = Practical quantitation limit
ND = Not detected at or above the MDL
P = The RPD between two GC columns exceeds 40%
J = Estimated result < PQL and ≥ MDL
N - Recovery is out of criteria
+ - RPD is out of criteria

Where applicable, all soil sample analysis are reported on a dry weight basis unless flagged with a "W"

Note: Calculations are performed before rounding to avoid round-off errors in calculated results

Semivolatile Organic Compounds by GC/MS - MSD

Sample ID: MA26019-015MD
Batch: 51711
Analytical Method: 8270D

Matrix: Aqueous
Prep Method: 3520C
Prep Date: 01/31/2011 1400

Parameter	Sample Amount (ug/L)	Spike Amount (ug/L)	Result (ug/L)	Q	Dil	% Rec	% RPD	% Rec Limit	% RPD Limit	Analysis Date
2-Nitroaniline	ND	82	50		1	62	6.4	48-126	40	02/02/2011 2104
3-Nitroaniline	ND	82	28		1	34	3.6	10-110	40	02/02/2011 2104
4-Nitroaniline	ND	82	46		1	57	3.5	41-99	40	02/02/2011 2104
Nitrobenzene	ND	41	26		1	63	15	44-91	40	02/02/2011 2104
2-Nitrophenol	ND	82	49		1	61	15	34-102	40	02/02/2011 2104
4-Nitrophenol	ND	200	120		1	61	1.8	29-122	40	02/02/2011 2104
N-Nitrosodi-n-propylamine	ND	41	23		1	56	19	41-96	40	02/02/2011 2104
N-Nitrosodiphenylamine (Diphenylamine)	ND	41	24		1	60	4.2	10-150	40	02/02/2011 2104
Pentachlorophenol	ND	200	150		1	73	5.2	32-110	40	02/02/2011 2104
Phenanthrene	ND	41	24		1	60	3.6	49-122	40	02/02/2011 2104
Phenol	ND	41	25		1	61	15	33-92	40	02/02/2011 2104
Pyrene	ND	41	19	N	1	48	2.1	50-130	40	02/02/2011 2104
2,4,5-Trichlorophenol	ND	41	24		1	60	11	46-125	40	02/02/2011 2104
2,4,6-Trichlorophenol	ND	41	24		1	60	14	36-123	40	02/02/2011 2104

Surrogate	Q	% Rec	Acceptance Limit
2-Fluorobiphenyl		59	37-129
2-Fluorophenol		63	24-127
Nitrobenzene-d5		65	38-127
Phenol-d5		65	28-128
Terphenyl-d14		20	10-148
2,4,6-Tribromophenol		69	41-144

PQL = Practical quantitation limit
ND = Not detected at or above the MDL
P = The RPD between two GC columns exceeds 40%
J = Estimated result < PQL and ≥ MDL
N - Recovery is out of criteria
+ - RPD is out of criteria

Where applicable, all soil sample analysis are reported on a dry weight basis unless flagged with a "W"

Note: Calculations are performed before rounding to avoid round-off errors in calculated results

Semivolatile Organic Compounds by GC/MS - MS

Sample ID: MA26019-021MS
Batch: 51711
Analytical Method: 8270D

Matrix: Aqueous
Prep Method: 3520C
Prep Date: 01/31/2011 1400

Parameter	Sample Amount (ug/L)	Spike Amount (ug/L)	Result (ug/L)	Q	Dil	% Rec	% Rec Limit	Analysis Date
Acenaphthene	ND	41	25		1	62	10-133	02/02/2011 1950
Acenaphthylene	ND	41	25		1	61	34-128	02/02/2011 1950
Anthracene	ND	41	24		1	60	48-122	02/02/2011 1950
Benzo(a)anthracene	ND	41	16	N	1	39	53-98	02/02/2011 1950
Benzo(a)pyrene	ND	41	15		1	36	11-160	02/02/2011 1950
Benzo(b)fluoranthene	ND	41	12		1	28	10-165	02/02/2011 1950
Benzo(g,h,i)perylene	ND	41	14	N	1	33	42-111	02/02/2011 1950
Benzo(k)fluoranthene	ND	41	22		1	53	13-175	02/02/2011 1950
4-Bromophenyl phenyl ether	ND	41	26		1	63	49-123	02/02/2011 1950
Butyl benzyl phthalate	ND	41	22		1	55	52-142	02/02/2011 1950
Carbazole	ND	41	25		1	60	45-101	02/02/2011 1950
4-Chloro-3-methyl phenol	ND	41	27		1	65	40-98	02/02/2011 1950
4-Chloroaniline	ND	41	2.8	N	1	6.9	10-98	02/02/2011 1950
bis(2-Chloroethoxy)methane	ND	41	24		1	60	43-93	02/02/2011 1950
bis(2-Chloroisopropyl)ether	ND	41	23		1	56	36-99	02/02/2011 1950
2-Chloronaphthalene	ND	41	18		1	43	40-89	02/02/2011 1950
2-Chlorophenol	ND	41	25		1	61	33-92	02/02/2011 1950
4-Chlorophenyl phenyl ether	ND	41	26		1	65	34-124	02/02/2011 1950
Chrysene	ND	41	23		1	56	51-107	02/02/2011 1950
Dibenzo(a,h)anthracene	ND	41	12	N	1	30	47-116	02/02/2011 1950
Dibenzofuran	ND	41	25		1	62	45-94	02/02/2011 1950
2,4-Dichlorophenol	ND	41	22		1	53	34-105	02/02/2011 1950
Diethylphthalate	ND	41	27		1	66	48-124	02/02/2011 1950
Dimethyl phthalate	ND	41	26		1	64	43-122	02/02/2011 1950
2,4-Dimethylphenol	ND	41	23		1	58	33-77	02/02/2011 1950
Di-n-butyl phthalate	ND	41	24		1	60	50-134	02/02/2011 1950
4,6-Dinitro-2-methylphenol	ND	200	150		1	72	33-118	02/02/2011 1950
2,4-Dinitrophenol	ND	200	140		1	69	19-119	02/02/2011 1950
2,4-Dinitrotoluene	ND	82	55		1	67	50-104	02/02/2011 1950
2,6-Dinitrotoluene	ND	82	54		1	66	53-128	02/02/2011 1950
Di-n-octylphthalate	ND	41	13	N	1	32	40-112	02/02/2011 1950
bis(2-Ethylhexyl)phthalate	ND	41	13		1	31	10-142	02/02/2011 1950
Fluoranthene	ND	41	24		1	59	50-124	02/02/2011 1950
Fluorene	ND	41	27		1	67	39-122	02/02/2011 1950
Hexachlorobenzene	ND	41	24		1	58	46-125	02/02/2011 1950
Hexachlorobutadiene	ND	41	24		1	58	42-94	02/02/2011 1950
Hexachlorocyclopentadiene	ND	200	86		1	42	14-89	02/02/2011 1950
Hexachloroethane	ND	41	23		1	55	39-86	02/02/2011 1950
Indeno(1,2,3-c,d)pyrene	ND	41	13	N	1	31	43-113	02/02/2011 1950
Isophorone	ND	41	21		1	51	42-84	02/02/2011 1950
2-Methylnaphthalene	ND	41	23		1	56	46-90	02/02/2011 1950
2-Methylphenol	ND	41	20		1	49	33-122	02/02/2011 1950
3 & 4-Methylphenol	ND	82	45		1	55	24-97	02/02/2011 1950
Naphthalene	ND	41	25		1	61	46-89	02/02/2011 1950

PQL = Practical quantitation limit
ND = Not detected at or above the MDL
P = The RPD between two GC columns exceeds 40%
J = Estimated result < PQL and ≥ MDL
N - Recovery is out of criteria
+ - RPD is out of criteria

Where applicable, all soil sample analysis are reported on a dry weight basis unless flagged with a "W"

Note: Calculations are performed before rounding to avoid round-off errors in calculated results

Semivolatile Organic Compounds by GC/MS - MS

Sample ID: MA26019-021MS
Batch: 51711
Analytical Method: 8270D

Matrix: Aqueous
Prep Method: 3520C
Prep Date: 01/31/2011 1400

Parameter	Sample Amount (ug/L)	Spike Amount (ug/L)	Result (ug/L)	Q	Dil	% Rec	% Rec Limit	Analysis Date
2-Nitroaniline	ND	82	52		1	63	48-126	02/02/2011 1950
3-Nitroaniline	ND	82	29		1	35	10-110	02/02/2011 1950
4-Nitroaniline	ND	82	45		1	55	41-99	02/02/2011 1950
Nitrobenzene	ND	41	29		1	72	44-91	02/02/2011 1950
2-Nitrophenol	ND	82	50		1	61	34-102	02/02/2011 1950
4-Nitrophenol	ND	200	110		1	56	29-122	02/02/2011 1950
N-Nitrosodi-n-propylamine	ND	41	23		1	57	41-96	02/02/2011 1950
N-Nitrosodiphenylamine (Diphenylamine)	ND	41	29		1	72	10-150	02/02/2011 1950
Pentachlorophenol	ND	200	140		1	71	32-110	02/02/2011 1950
Phenanthrene	ND	41	25		1	62	49-122	02/02/2011 1950
Phenol	ND	41	26		1	64	33-92	02/02/2011 1950
Pyrene	ND	41	22		1	53	50-130	02/02/2011 1950
2,4,5-Trichlorophenol	ND	41	25		1	60	46-125	02/02/2011 1950
2,4,6-Trichlorophenol	ND	41	25		1	61	36-123	02/02/2011 1950

Surrogate	Q	% Rec	Acceptance Limit
2-Fluorobiphenyl		61	37-129
2-Fluorophenol		63	24-127
Nitrobenzene-d5		68	38-127
Phenol-d5		67	28-128
Terphenyl-d14		40	10-148
2,4,6-Tribromophenol		70	41-144

PQL = Practical quantitation limit
ND = Not detected at or above the MDL
P = The RPD between two GC columns exceeds 40%
J = Estimated result < PQL and ≥ MDL
N - Recovery is out of criteria
+ - RPD is out of criteria

Where applicable, all soil sample analysis are reported on a dry weight basis unless flagged with a "W"

Note: Calculations are performed before rounding to avoid round-off errors in calculated results

Semivolatile Organic Compounds by GC/MS - MSD

Sample ID: MA26019-021MD
Batch: 51711
Analytical Method: 8270D

Matrix: Aqueous
Prep Method: 3520C
Prep Date: 01/31/2011 1400

Parameter	Sample Amount (ug/L)	Spike Amount (ug/L)	Result (ug/L)	Q	Dil	% Rec	% RPD	% Rec Limit	% RPD Limit	Analysis Date
Acenaphthene	ND	41	27		1	67	7.3	10-133	40	02/02/2011 2008
Acenaphthylene	ND	41	26		1	64	5.8	34-128	40	02/02/2011 2008
Anthracene	ND	41	26		1	63	4.7	48-122	40	02/02/2011 2008
Benzo(a)anthracene	ND	41	17	N	1	42	9.1	53-98	40	02/02/2011 2008
Benzo(a)pyrene	ND	41	13		1	32	12	11-160	40	02/02/2011 2008
Benzo(b)fluoranthene	ND	41	11		1	26	8.8	10-165	40	02/02/2011 2008
Benzo(g,h,i)perylene	ND	41	11	N	1	27	22	42-111	40	02/02/2011 2008
Benzo(k)fluoranthene	ND	41	19		1	47	12	13-175	40	02/02/2011 2008
4-Bromophenyl phenyl ether	ND	41	27		1	66	5.2	49-123	40	02/02/2011 2008
Butyl benzyl phthalate	ND	41	22		1	54	0.60	52-142	40	02/02/2011 2008
Carbazole	ND	41	27		1	67	10	45-101	40	02/02/2011 2008
4-Chloro-3-methyl phenol	ND	41	31		1	76	16	40-98	40	02/02/2011 2008
4-Chloroaniline	ND	41	2.9	N	1	7.1	2.9	10-98	40	02/02/2011 2008
bis(2-Chloroethoxy)methane	ND	41	28		1	69	15	43-93	40	02/02/2011 2008
bis(2-Chloroisopropyl)ether	ND	41	19		1	47	17	36-99	40	02/02/2011 2008
2-Chloronaphthalene	ND	41	20		1	48	11	40-89	40	02/02/2011 2008
2-Chlorophenol	ND	41	22		1	55	11	33-92	40	02/02/2011 2008
4-Chlorophenyl phenyl ether	ND	41	28		1	68	5.0	34-124	40	02/02/2011 2008
Chrysene	ND	41	22		1	53	5.7	51-107	40	02/02/2011 2008
Dibenzo(a,h)anthracene	ND	41	10	N	1	25	21	47-116	40	02/02/2011 2008
Dibenzofuran	ND	41	27		1	66	5.6	45-94	40	02/02/2011 2008
2,4-Dichlorophenol	ND	41	27		1	65	21	34-105	40	02/02/2011 2008
Diethylphthalate	ND	41	29		1	70	6.1	48-124	40	02/02/2011 2008
Dimethyl phthalate	ND	41	29		1	70	8.8	43-122	40	02/02/2011 2008
2,4-Dimethylphenol	ND	41	27		1	67	16	33-77	40	02/02/2011 2008
Di-n-butyl phthalate	ND	41	25		1	62	3.9	50-134	40	02/02/2011 2008
4,6-Dinitro-2-methylphenol	ND	200	160		1	77	6.6	33-118	40	02/02/2011 2008
2,4-Dinitrophenol	ND	200	160		1	77	11	19-119	40	02/02/2011 2008
2,4-Dinitrotoluene	ND	82	56		1	69	2.7	50-104	40	02/02/2011 2008
2,6-Dinitrotoluene	ND	82	58		1	71	7.1	53-128	40	02/02/2011 2008
Di-n-octylphthalate	ND	41	10	N	1	25	24	40-112	40	02/02/2011 2008
bis(2-Ethylhexyl)phthalate	ND	41	10		1	25	20	10-142	40	02/02/2011 2008
Fluoranthene	ND	41	25		1	61	4.4	50-124	40	02/02/2011 2008
Fluorene	ND	41	29		1	71	5.7	39-122	40	02/02/2011 2008
Hexachlorobenzene	ND	41	25		1	60	3.4	46-125	40	02/02/2011 2008
Hexachlorobutadiene	ND	41	21		1	51	14	42-94	40	02/02/2011 2008
Hexachlorocyclopentadiene	ND	200	84		1	41	2.2	14-89	40	02/02/2011 2008
Hexachloroethane	ND	41	20		1	48	14	39-86	40	02/02/2011 2008
Indeno(1,2,3-c,d)pyrene	ND	41	11	N	1	28	12	43-113	40	02/02/2011 2008
Isophorone	ND	41	22		1	55	6.5	42-84	40	02/02/2011 2008
2-Methylnaphthalene	ND	41	25		1	61	7.9	46-90	40	02/02/2011 2008
2-Methylphenol	ND	41	22		1	53	7.8	33-122	40	02/02/2011 2008
3 & 4-Methylphenol	ND	82	49		1	60	8.6	24-97	40	02/02/2011 2008
Naphthalene	ND	41	23		1	57	7.3	46-89	40	02/02/2011 2008

PQL = Practical quantitation limit
ND = Not detected at or above the MDL
P = The RPD between two GC columns exceeds 40%
J = Estimated result < PQL and ≥ MDL
N - Recovery is out of criteria
+ - RPD is out of criteria

Where applicable, all soil sample analysis are reported on a dry weight basis unless flagged with a "W"

Note: Calculations are performed before rounding to avoid round-off errors in calculated results

Semivolatile Organic Compounds by GC/MS - MSD

Sample ID: MA26019-021MD
Batch: 51711
Analytical Method: 8270D

Matrix: Aqueous
Prep Method: 3520C
Prep Date: 01/31/2011 1400

Parameter	Sample Amount (ug/L)	Spike Amount (ug/L)	Result (ug/L)	Q	Dil	% Rec	% RPD	% Rec Limit	% RPD Limit	Analysis Date
2-Nitroaniline	ND	82	57		1	70	11	48-126	40	02/02/2011 2008
3-Nitroaniline	ND	82	32		1	39	11	10-110	40	02/02/2011 2008
4-Nitroaniline	ND	82	47		1	58	5.4	41-99	40	02/02/2011 2008
Nitrobenzene	ND	41	24		1	58	21	44-91	40	02/02/2011 2008
2-Nitrophenol	ND	82	48		1	59	3.6	34-102	40	02/02/2011 2008
4-Nitrophenol	ND	200	130		1	66	17	29-122	40	02/02/2011 2008
N-Nitrosodi-n-propylamine	ND	41	24		1	58	2.5	41-96	40	02/02/2011 2008
N-Nitrosodiphenylamine (Diphenylamine)	ND	41	31		1	75	4.7	10-150	40	02/02/2011 2008
Pentachlorophenol	ND	200	150		1	74	4.9	32-110	40	02/02/2011 2008
Phenanthrene	ND	41	27		1	66	6.0	49-122	40	02/02/2011 2008
Phenol	ND	41	25		1	61	3.5	33-92	40	02/02/2011 2008
Pyrene	ND	41	24		1	60	11	50-130	40	02/02/2011 2008
2,4,5-Trichlorophenol	ND	41	27		1	67	10	46-125	40	02/02/2011 2008
2,4,6-Trichlorophenol	ND	41	28		1	68	11	36-123	40	02/02/2011 2008

Surrogate	Q	% Rec	Acceptance Limit
2-Fluorobiphenyl		65	37-129
2-Fluorophenol		53	24-127
Nitrobenzene-d5		61	38-127
Phenol-d5		66	28-128
Terphenyl-d14		37	10-148
2,4,6-Tribromophenol		74	41-144

PQL = Practical quantitation limit
ND = Not detected at or above the MDL
P = The RPD between two GC columns exceeds 40%
J = Estimated result < PQL and ≥ MDL
N - Recovery is out of criteria
+ - RPD is out of criteria

Where applicable, all soil sample analysis are reported on a dry weight basis unless flagged with a "W"

Note: Calculations are performed before rounding to avoid round-off errors in calculated results

Semivolatile Organic Compounds by GC/MS - MB

Sample ID: MQ51712-001
Batch: 51712
Analytical Method: 8270D

Matrix: Aqueous
Prep Method: 3520C
Prep Date: 01/31/2011 1400

Parameter	Result	Q	Dil	PQL	MDL	Units	Analysis Date
2,4,5-Trichlorophenol	ND		1	1.0	0.18	ug/L	02/02/2011 1320
2,4,6-Trichlorophenol	ND		1	1.0	0.22	ug/L	02/02/2011 1320
2,4-Dichlorophenol	ND		1	1.0	0.15	ug/L	02/02/2011 1320
2,4-Dimethylphenol	ND		1	1.0	0.31	ug/L	02/02/2011 1320
2,4-Dinitrophenol	ND		1	5.0	0.25	ug/L	02/02/2011 1320
2,4-Dinitrotoluene	ND		1	2.0	0.45	ug/L	02/02/2011 1320
2,6-Dinitrotoluene	ND		1	2.0	0.40	ug/L	02/02/2011 1320
2-Chloronaphthalene	ND		1	1.0	0.12	ug/L	02/02/2011 1320
2-Chlorophenol	ND		1	1.0	0.13	ug/L	02/02/2011 1320
2-Methylnaphthalene	ND		1	1.0	0.080	ug/L	02/02/2011 1320
2-Methylphenol	ND		1	1.0	0.17	ug/L	02/02/2011 1320
2-Nitroaniline	ND		1	2.0	0.55	ug/L	02/02/2011 1320
2-Nitrophenol	ND		1	2.0	0.27	ug/L	02/02/2011 1320
3 & 4-Methylphenol	ND		1	2.0	0.57	ug/L	02/02/2011 1320
3,3'-Dichlorobenzidine	ND		1	5.0	0.81	ug/L	02/02/2011 1320
3-Nitroaniline	ND		1	2.0	0.77	ug/L	02/02/2011 1320
4,6-Dinitro-2-methylphenol	ND		1	5.0	1.5	ug/L	02/02/2011 1320
4-Bromophenyl phenyl ether	ND		1	1.0	0.12	ug/L	02/02/2011 1320
4-Chloro-3-methyl phenol	ND		1	1.0	0.22	ug/L	02/02/2011 1320
4-Chloroaniline	ND		1	1.0	0.13	ug/L	02/02/2011 1320
4-Chlorophenyl phenyl ether	ND		1	1.0	0.11	ug/L	02/02/2011 1320
4-Nitroaniline	ND		1	2.0	0.39	ug/L	02/02/2011 1320
4-Nitrophenol	ND		1	5.0	0.64	ug/L	02/02/2011 1320
Acenaphthene	ND		1	1.0	0.090	ug/L	02/02/2011 1320
Acenaphthylene	ND		1	1.0	0.16	ug/L	02/02/2011 1320
Anthracene	ND		1	1.0	0.13	ug/L	02/02/2011 1320
Benzo(a)anthracene	ND		1	1.0	0.15	ug/L	02/02/2011 1320
Benzo(a)pyrene	ND		1	1.0	0.16	ug/L	02/02/2011 1320
Benzo(b)fluoranthene	ND		1	1.0	0.20	ug/L	02/02/2011 1320
Benzo(g,h,i)perylene	ND		1	1.0	0.23	ug/L	02/02/2011 1320
Benzo(k)fluoranthene	ND		1	1.0	0.12	ug/L	02/02/2011 1320
bis(2-Chloroethoxy)methane	ND		1	1.0	0.13	ug/L	02/02/2011 1320
bis(2-Chloroisopropyl)ether	ND		1	1.0	0.080	ug/L	02/02/2011 1320
bis(2-Ethylhexyl)phthalate	ND		1	5.0	1.7	ug/L	02/02/2011 1320
Butyl benzyl phthalate	ND		1	5.0	1.7	ug/L	02/02/2011 1320
Carbazole	ND		1	1.0	0.25	ug/L	02/02/2011 1320
Chrysene	ND		1	1.0	0.12	ug/L	02/02/2011 1320
Di-n-butyl phthalate	ND		1	5.0	1.7	ug/L	02/02/2011 1320
Di-n-octylphthalate	ND		1	5.0	1.7	ug/L	02/02/2011 1320
Dibenzo(a,h)anthracene	ND		1	1.0	0.13	ug/L	02/02/2011 1320
Dibenzofuran	ND		1	1.0	0.16	ug/L	02/02/2011 1320
Diethylphthalate	ND		1	5.0	1.7	ug/L	02/02/2011 1320
Dimethyl phthalate	ND		1	5.0	1.7	ug/L	02/02/2011 1320
Fluoranthene	ND		1	1.0	0.21	ug/L	02/02/2011 1320

PQL = Practical quantitation limit
ND = Not detected at or above the MDL
P = The RPD between two GC columns exceeds 40%
J = Estimated result < PQL and ≥ MDL
N - Recovery is out of criteria
+ - RPD is out of criteria

Where applicable, all soil sample analysis are reported on a dry weight basis unless flagged with a "W"

Note: Calculations are performed before rounding to avoid round-off errors in calculated results

Semivolatile Organic Compounds by GC/MS - MB

Sample ID: MQ51712-001
Batch: 51712
Analytical Method: 8270D

Matrix: Aqueous
Prep Method: 3520C
Prep Date: 01/31/2011 1400

Parameter	Result	Q	Dil	PQL	MDL	Units	Analysis Date
Fluorene	ND		1	1.0	0.10	ug/L	02/02/2011 1320
Hexachlorobenzene	ND		1	1.0	0.21	ug/L	02/02/2011 1320
Hexachlorobutadiene	ND		1	1.0	0.090	ug/L	02/02/2011 1320
Hexachlorocyclopentadiene	ND		1	5.0	0.23	ug/L	02/02/2011 1320
Hexachloroethane	ND		1	1.0	0.11	ug/L	02/02/2011 1320
Indeno(1,2,3-c,d)pyrene	ND		1	1.0	0.23	ug/L	02/02/2011 1320
Isophorone	ND		1	1.0	0.080	ug/L	02/02/2011 1320
N-Nitrosodi-n-propylamine	ND		1	1.0	0.080	ug/L	02/02/2011 1320
N-Nitrosodiphenylamine (Diphenylamine)	ND		1	1.0	0.38	ug/L	02/02/2011 1320
Naphthalene	ND		1	1.0	0.070	ug/L	02/02/2011 1320
Nitrobenzene	ND		1	1.0	0.10	ug/L	02/02/2011 1320
Pentachlorophenol	ND		1	5.0	0.54	ug/L	02/02/2011 1320
Phenanthrene	ND		1	1.0	0.18	ug/L	02/02/2011 1320
Phenol	ND		1	1.0	0.11	ug/L	02/02/2011 1320
Pyrene	ND		1	1.0	0.16	ug/L	02/02/2011 1320

Surrogate	Q	% Rec	Acceptance Limit
2,4,6-Tribromophenol		59	41-144
2-Fluorobiphenyl		61	37-129
2-Fluorophenol		56	24-127
Nitrobenzene-d5		62	38-127
Phenol-d5		69	28-128
Terphenyl-d14		60	10-148

PQL = Practical quantitation limit
ND = Not detected at or above the MDL
P = The RPD between two GC columns exceeds 40%
J = Estimated result < PQL and ≥ MDL
N - Recovery is out of criteria
+ - RPD is out of criteria

Where applicable, all soil sample analysis are reported on a dry weight basis unless flagged with a "W"

Note: Calculations are performed before rounding to avoid round-off errors in calculated results

Semivolatile Organic Compounds by GC/MS - LCS

Sample ID: MQ51712-002
Batch: 51712
Analytical Method: 8270D

Matrix: Aqueous
Prep Method: 3520C
Prep Date: 01/31/2011 1400

Parameter	Spike Amount (ug/L)	Result (ug/L)	Q	Dil	% Rec	% Rec Limit	Analysis Date
2,4,5-Trichlorophenol	20	10		1	50	46-125	02/02/2011 1339
2,4,6-Trichlorophenol	20	12		1	61	36-123	02/02/2011 1339
2,4-Dichlorophenol	20	11		1	53	38-127	02/02/2011 1339
2,4-Dimethylphenol	20	11		1	54	36-110	02/02/2011 1339
2,4-Dinitrophenol	100	64		1	64	33-143	02/02/2011 1339
2,4-Dinitrotoluene	40	27		1	67	55-137	02/02/2011 1339
2,6-Dinitrotoluene	40	25		1	63	53-128	02/02/2011 1339
2-Chloronaphthalene	20	12		1	61	42-132	02/02/2011 1339
2-Chlorophenol	20	9.5		1	47	40-128	02/02/2011 1339
2-Methylnaphthalene	20	9.9		1	49	49-122	02/02/2011 1339
2-Methylphenol	20	10		1	51	33-122	02/02/2011 1339
2-Nitroaniline	40	24		1	61	48-126	02/02/2011 1339
2-Nitrophenol	40	19		1	49	44-131	02/02/2011 1339
3 & 4-Methylphenol	40	24		1	60	48-112	02/02/2011 1339
3-Nitroaniline	40	24		1	61	29-109	02/02/2011 1339
4,6-Dinitro-2-methylphenol	100	73		1	73	46-151	02/02/2011 1339
4-Bromophenyl phenyl ether	20	12		1	60	49-123	02/02/2011 1339
4-Chloro-3-methyl phenol	20	11		1	57	48-136	02/02/2011 1339
4-Chloroaniline	20	3.7		1	19	18-73	02/02/2011 1339
4-Chlorophenyl phenyl ether	20	12		1	61	34-124	02/02/2011 1339
4-Nitroaniline	40	31		1	77	42-154	02/02/2011 1339
4-Nitrophenol	100	75		1	75	43-145	02/02/2011 1339
Acenaphthene	20	11		1	56	51-130	02/02/2011 1339
Acenaphthylene	20	11		1	55	46-131	02/02/2011 1339
Anthracene	20	12		1	62	48-122	02/02/2011 1339
Benzo(a)anthracene	20	14		1	70	50-143	02/02/2011 1339
Benzo(a)pyrene	20	12		1	60	55-141	02/02/2011 1339
Benzo(b)fluoranthene	20	16		1	82	48-147	02/02/2011 1339
Benzo(g,h,i)perylene	20	13		1	63	48-139	02/02/2011 1339
Benzo(k)fluoranthene	20	10		1	52	48-148	02/02/2011 1339
bis(2-Chloroethoxy)methane	20	10		1	52	46-130	02/02/2011 1339
bis(2-Chloroisopropyl)ether	20	8.8		1	44	36-133	02/02/2011 1339
bis(2-Ethylhexyl)phthalate	20	12		1	61	40-141	02/02/2011 1339
Butyl benzyl phthalate	20	14		1	68	52-142	02/02/2011 1339
Carbazole	20	14		1	68	45-101	02/02/2011 1339
Chrysene	20	12		1	59	51-137	02/02/2011 1339
Di-n-butyl phthalate	20	13		1	67	50-134	02/02/2011 1339
Di-n-octylphthalate	20	13		1	63	50-136	02/02/2011 1339
Dibenzo(a,h)anthracene	20	12		1	60	48-139	02/02/2011 1339
Dibenzofuran	20	12		1	58	45-142	02/02/2011 1339
Diethylphthalate	20	13		1	65	48-124	02/02/2011 1339
Dimethyl phthalate	20	12		1	62	43-122	02/02/2011 1339
Fluoranthene	20	13		1	66	50-124	02/02/2011 1339
Fluorene	20	12		1	61	39-122	02/02/2011 1339

PQL = Practical quantitation limit
ND = Not detected at or above the MDL
P = The RPD between two GC columns exceeds 40%
J = Estimated result < PQL and ≥ MDL
N - Recovery is out of criteria
+ - RPD is out of criteria

Where applicable, all soil sample analysis are reported on a dry weight basis unless flagged with a "W"

Note: Calculations are performed before rounding to avoid round-off errors in calculated results

Semivolatile Organic Compounds by GC/MS - LCS

Sample ID: MQ51712-002
Batch: 51712
Analytical Method: 8270D

Matrix: Aqueous
Prep Method: 3520C
Prep Date: 01/31/2011 1400

Parameter	Spike Amount (ug/L)	Result (ug/L)	Q	Dil	% Rec	% Rec Limit	Analysis Date
Hexachlorobenzene	20	12		1	60	46-125	02/02/2011 1339
Hexachlorobutadiene	20	9.0		1	45	38-121	02/02/2011 1339
Hexachlorocyclopentadiene	100	40		1	40	24-110	02/02/2011 1339
Hexachloroethane	20	8.6		1	43	32-109	02/02/2011 1339
Indeno(1,2,3-c,d)pyrene	20	12		1	59	49-146	02/02/2011 1339
Isophorone	20	11		1	53	43-118	02/02/2011 1339
N-Nitrosodi-n-propylamine	20	10		1	52	46-135	02/02/2011 1339
N-Nitrosodiphenylamine (Diphenylamine)	20	14		1	72	44-124	02/02/2011 1339
Naphthalene	20	9.9		1	50	45-118	02/02/2011 1339
Nitrobenzene	20	11		1	53	46-131	02/02/2011 1339
Pentachlorophenol	100	72		1	72	30-137	02/02/2011 1339
Phenanthrene	20	13		1	66	49-122	02/02/2011 1339
Phenol	20	11		1	55	35-118	02/02/2011 1339
Pyrene	20	13		1	65	50-130	02/02/2011 1339

Surrogate	Q	% Rec	Acceptance Limit
2,4,6-Tribromophenol		68	41-144
2-Fluorobiphenyl		55	37-129
2-Fluorophenol		48	24-127
Nitrobenzene-d5		53	38-127
Phenol-d5		59	28-128
Terphenyl-d14		59	10-148

PQL = Practical quantitation limit
ND = Not detected at or above the MDL
P = The RPD between two GC columns exceeds 40%
J = Estimated result < PQL and ≥ MDL
N - Recovery is out of criteria
+ - RPD is out of criteria

Where applicable, all soil sample analysis are reported on a dry weight basis unless flagged with a "W"

Note: Calculations are performed before rounding to avoid round-off errors in calculated results

Semivolatile Organic Compounds by GC/MS - MS

Sample ID: MA26019-036MS
Batch: 51712
Analytical Method: 8270D

Matrix: Aqueous
Prep Method: 3520C
Prep Date: 01/31/2011 1400

Parameter	Sample Amount (ug/L)	Spike Amount (ug/L)	Result (ug/L)	Q	Dil	% Rec	% Rec Limit	Analysis Date
Acenaphthene	ND	41	20		1	49	10-133	02/02/2011 1957
Acenaphthylene	ND	41	19		1	47	34-128	02/02/2011 1957
Anthracene	ND	41	18	N	1	45	48-122	02/02/2011 1957
Benzo(a)anthracene	ND	41	16	N	1	38	53-98	02/02/2011 1957
Benzo(a)pyrene	ND	41	14		1	35	11-160	02/02/2011 1957
Benzo(b)fluoranthene	ND	41	13		1	33	10-165	02/02/2011 1957
Benzo(g,h,i)perylene	ND	41	12	N	1	30	42-111	02/02/2011 1957
Benzo(k)fluoranthene	ND	41	22		1	55	13-175	02/02/2011 1957
4-Bromophenyl phenyl ether	ND	41	19	N	1	47	49-123	02/02/2011 1957
Butyl benzyl phthalate	ND	41	19	N	1	47	52-142	02/02/2011 1957
Carbazole	ND	41	13	N	1	32	45-101	02/02/2011 1957
4-Chloro-3-methyl phenol	ND	41	23		1	55	40-98	02/02/2011 1957
4-Chloroaniline	ND	41	ND	N	1	0.00	10-98	02/02/2011 1957
bis(2-Chloroethoxy)methane	ND	41	17	N	1	42	43-93	02/02/2011 1957
bis(2-Chloroisopropyl)ether	ND	41	21		1	52	36-99	02/02/2011 1957
2-Chloronaphthalene	ND	41	19		1	47	40-89	02/02/2011 1957
2-Chlorophenol	ND	41	20		1	50	33-92	02/02/2011 1957
4-Chlorophenyl phenyl ether	ND	41	21		1	51	34-124	02/02/2011 1957
Chrysene	ND	41	17	N	1	43	51-107	02/02/2011 1957
Dibenzo(a,h)anthracene	ND	41	14	N	1	34	47-116	02/02/2011 1957
Dibenzofuran	ND	41	20		1	49	45-94	02/02/2011 1957
2,4-Dichlorophenol	ND	41	21		1	52	34-105	02/02/2011 1957
Diethylphthalate	ND	41	23		1	57	48-124	02/02/2011 1957
Dimethyl phthalate	ND	41	22		1	54	43-122	02/02/2011 1957
2,4-Dimethylphenol	ND	41	24		1	59	33-77	02/02/2011 1957
Di-n-butyl phthalate	ND	41	21		1	51	50-134	02/02/2011 1957
4,6-Dinitro-2-methylphenol	ND	200	120		1	58	33-118	02/02/2011 1957
2,4-Dinitrophenol	ND	200	130		1	65	19-119	02/02/2011 1957
2,4-Dinitrotoluene	ND	82	45		1	55	50-104	02/02/2011 1957
2,6-Dinitrotoluene	ND	82	47		1	57	53-128	02/02/2011 1957
Di-n-octylphthalate	ND	41	16	N	1	39	40-112	02/02/2011 1957
bis(2-Ethylhexyl)phthalate	ND	41	12		1	29	10-142	02/02/2011 1957
Fluoranthene	ND	41	20	N	1	48	50-124	02/02/2011 1957
Fluorene	ND	41	21		1	52	39-122	02/02/2011 1957
Hexachlorobenzene	ND	41	18	N	1	44	46-125	02/02/2011 1957
Hexachlorobutadiene	ND	41	21		1	51	42-94	02/02/2011 1957
Hexachlorocyclopentadiene	ND	200	67		1	33	14-89	02/02/2011 1957
Hexachloroethane	ND	41	20		1	49	39-86	02/02/2011 1957
Indeno(1,2,3-c,d)pyrene	ND	41	13	N	1	32	43-113	02/02/2011 1957
Isophorone	ND	41	22		1	54	42-84	02/02/2011 1957
2-Methylnaphthalene	ND	41	20		1	50	46-90	02/02/2011 1957
2-Methylphenol	ND	41	29		1	71	33-122	02/02/2011 1957
3 & 4-Methylphenol	ND	82	42		1	52	24-97	02/02/2011 1957
Naphthalene	ND	41	21		1	52	46-89	02/02/2011 1957

PQL = Practical quantitation limit
ND = Not detected at or above the MDL
P = The RPD between two GC columns exceeds 40%
J = Estimated result < PQL and ≥ MDL
N - Recovery is out of criteria
+ - RPD is out of criteria

Where applicable, all soil sample analysis are reported on a dry weight basis unless flagged with a "W"

Note: Calculations are performed before rounding to avoid round-off errors in calculated results

Semivolatile Organic Compounds by GC/MS - MS

Sample ID: MA26019-036MS
Batch: 51712
Analytical Method: 8270D

Matrix: Aqueous
Prep Method: 3520C
Prep Date: 01/31/2011 1400

Parameter	Sample Amount (ug/L)	Spike Amount (ug/L)	Result (ug/L)	Q	Dil	% Rec	% Rec Limit	Analysis Date
2-Nitroaniline	ND	82	40		1	49	48-126	02/02/2011 1957
3-Nitroaniline	ND	82	ND	N	1	0.00	10-110	02/02/2011 1957
4-Nitroaniline	ND	82	ND	N	1	0.00	41-99	02/02/2011 1957
Nitrobenzene	ND	41	24		1	58	44-91	02/02/2011 1957
2-Nitrophenol	ND	82	45		1	55	34-102	02/02/2011 1957
4-Nitrophenol	ND	200	120		1	58	29-122	02/02/2011 1957
N-Nitrosodi-n-propylamine	ND	41	22		1	55	41-96	02/02/2011 1957
N-Nitrosodiphenylamine (Diphenylamine)	ND	41	10		1	25	10-150	02/02/2011 1957
Pentachlorophenol	ND	200	110		1	54	32-110	02/02/2011 1957
Phenanthrene	ND	41	20		1	49	49-122	02/02/2011 1957
Phenol	ND	41	20		1	50	33-92	02/02/2011 1957
Pyrene	ND	41	19	N	1	47	50-130	02/02/2011 1957
2,4,5-Trichlorophenol	ND	41	22		1	53	46-125	02/02/2011 1957
2,4,6-Trichlorophenol	ND	41	21		1	51	36-123	02/02/2011 1957

Surrogate	Q	% Rec	Acceptance Limit
2-Fluorobiphenyl		53	37-129
2-Fluorophenol		55	24-127
Nitrobenzene-d5		60	38-127
Phenol-d5		54	28-128
Terphenyl-d14		33	10-148
2,4,6-Tribromophenol		58	41-144

PQL = Practical quantitation limit
ND = Not detected at or above the MDL
P = The RPD between two GC columns exceeds 40%
J = Estimated result < PQL and ≥ MDL
N - Recovery is out of criteria
+ - RPD is out of criteria

Where applicable, all soil sample analysis are reported on a dry weight basis unless flagged with a "W"

Note: Calculations are performed before rounding to avoid round-off errors in calculated results

Semivolatile Organic Compounds by GC/MS - MSD

Sample ID: MA26019-036MD
Batch: 51712
Analytical Method: 8270D

Matrix: Aqueous
Prep Method: 3520C
Prep Date: 01/31/2011 1400

Parameter	Sample Amount (ug/L)	Spike Amount (ug/L)	Result (ug/L)	Q	Dil	% Rec	% RPD	% Rec Limit	% RPD Limit	Analysis Date
Acenaphthene	ND	41	21		1	52	6.5	10-133	40	02/02/2011 2017
Acenaphthylene	ND	41	21		1	52	11	34-128	40	02/02/2011 2017
Anthracene	ND	41	22		1	53	15	48-122	40	02/02/2011 2017
Benzo(a)anthracene	ND	41	17	N	1	43	11	53-98	40	02/02/2011 2017
Benzo(a)pyrene	ND	41	14		1	34	3.3	11-160	40	02/02/2011 2017
Benzo(b)fluoranthene	ND	41	13		1	33	0.11	10-165	40	02/02/2011 2017
Benzo(g,h,i)perylene	ND	41	13	N	1	33	7.6	42-111	40	02/02/2011 2017
Benzo(k)fluoranthene	ND	41	23		1	55	0.74	13-175	40	02/02/2011 2017
4-Bromophenyl phenyl ether	ND	41	21		1	53	11	49-123	40	02/02/2011 2017
Butyl benzyl phthalate	ND	41	21		1	52	11	52-142	40	02/02/2011 2017
Carbazole	ND	41	18		1	45	34	45-101	40	02/02/2011 2017
4-Chloro-3-methyl phenol	ND	41	25		1	61	9.0	40-98	40	02/02/2011 2017
4-Chloroaniline	ND	41	ND	N	1	0.00	0.00	10-98	40	02/02/2011 2017
bis(2-Chloroethoxy)methane	ND	41	17	N	1	42	0.091	43-93	40	02/02/2011 2017
bis(2-Chloroisopropyl)ether	ND	41	17		1	42	21	36-99	40	02/02/2011 2017
2-Chloronaphthalene	ND	41	19		1	48	0.61	40-89	40	02/02/2011 2017
2-Chlorophenol	ND	41	17		1	41	20	33-92	40	02/02/2011 2017
4-Chlorophenyl phenyl ether	ND	41	23		1	56	9.4	34-124	40	02/02/2011 2017
Chrysene	ND	41	19	N	1	46	6.9	51-107	40	02/02/2011 2017
Dibenzo(a,h)anthracene	ND	41	14	N	1	34	1.1	47-116	40	02/02/2011 2017
Dibenzofuran	ND	41	22		1	53	7.7	45-94	40	02/02/2011 2017
2,4-Dichlorophenol	ND	41	20		1	50	3.9	34-105	40	02/02/2011 2017
Diethylphthalate	ND	41	26		1	64	12	48-124	40	02/02/2011 2017
Dimethyl phthalate	ND	41	25		1	61	12	43-122	40	02/02/2011 2017
2,4-Dimethylphenol	ND	41	23		1	56	5.2	33-77	40	02/02/2011 2017
Di-n-butyl phthalate	ND	41	22		1	54	7.3	50-134	40	02/02/2011 2017
4,6-Dinitro-2-methylphenol	ND	200	140		1	68	17	33-118	40	02/02/2011 2017
2,4-Dinitrophenol	ND	200	150		1	72	11	19-119	40	02/02/2011 2017
2,4-Dinitrotoluene	ND	82	49		1	60	8.3	50-104	40	02/02/2011 2017
2,6-Dinitrotoluene	ND	82	52		1	64	12	53-128	40	02/02/2011 2017
Di-n-octylphthalate	ND	41	16	N	1	38	2.8	40-112	40	02/02/2011 2017
bis(2-Ethylhexyl)phthalate	ND	41	12		1	30	4.6	10-142	40	02/02/2011 2017
Fluoranthene	ND	41	21		1	52	8.3	50-124	40	02/02/2011 2017
Fluorene	ND	41	24		1	58	11	39-122	40	02/02/2011 2017
Hexachlorobenzene	ND	41	19		1	48	9.0	46-125	40	02/02/2011 2017
Hexachlorobutadiene	ND	41	17	N	1	41	20	42-94	40	02/02/2011 2017
Hexachlorocyclopentadiene	ND	200	61		1	30	10	14-89	40	02/02/2011 2017
Hexachloroethane	ND	41	16		1	40	21	39-86	40	02/02/2011 2017
Indeno(1,2,3-c,d)pyrene	ND	41	13	N	1	31	2.9	43-113	40	02/02/2011 2017
Isophorone	ND	41	21		1	51	6.8	42-84	40	02/02/2011 2017
2-Methylnaphthalene	ND	41	18	N	1	45	10	46-90	40	02/02/2011 2017
2-Methylphenol	ND	41	27		1	67	6.1	33-122	40	02/02/2011 2017
3 & 4-Methylphenol	ND	82	41		1	51	1.9	24-97	40	02/02/2011 2017
Naphthalene	ND	41	18	N	1	45	15	46-89	40	02/02/2011 2017

PQL = Practical quantitation limit
ND = Not detected at or above the MDL
P = The RPD between two GC columns exceeds 40%
J = Estimated result < PQL and ≥ MDL
N - Recovery is out of criteria
+ - RPD is out of criteria

Where applicable, all soil sample analysis are reported on a dry weight basis unless flagged with a "W"

Note: Calculations are performed before rounding to avoid round-off errors in calculated results

Semivolatile Organic Compounds by GC/MS - MSD

Sample ID: MA26019-036MD
Batch: 51712
Analytical Method: 8270D

Matrix: Aqueous
Prep Method: 3520C
Prep Date: 01/31/2011 1400

Parameter	Sample Amount (ug/L)	Spike Amount (ug/L)	Result (ug/L)	Q	Dil	% Rec	% RPD	% Rec Limit	% RPD Limit	Analysis Date
2-Nitroaniline	ND	82	45		1	56	14	48-126	40	02/02/2011 2017
3-Nitroaniline	ND	82	3.7	N,+	1	4.5	200	10-110	40	02/02/2011 2017
4-Nitroaniline	ND	82	11	N,+	1	14	200	41-99	40	02/02/2011 2017
Nitrobenzene	ND	41	20		1	50	15	44-91	40	02/02/2011 2017
2-Nitrophenol	ND	82	38		1	47	15	34-102	40	02/02/2011 2017
4-Nitrophenol	ND	200	130		1	66	12	29-122	40	02/02/2011 2017
N-Nitrosodi-n-propylamine	ND	41	20		1	49	12	41-96	40	02/02/2011 2017
N-Nitrosodiphenylamine (Diphenylamine)	ND	41	19	+	1	48	61	10-150	40	02/02/2011 2017
Pentachlorophenol	ND	200	120		1	60	10	32-110	40	02/02/2011 2017
Phenanthrene	ND	41	22		1	54	9.4	49-122	40	02/02/2011 2017
Phenol	ND	41	18		1	44	13	33-92	40	02/02/2011 2017
Pyrene	ND	41	22		1	53	12	50-130	40	02/02/2011 2017
2,4,5-Trichlorophenol	ND	41	25		1	61	14	46-125	40	02/02/2011 2017
2,4,6-Trichlorophenol	ND	41	22		1	55	6.7	36-123	40	02/02/2011 2017

Surrogate	Q	% Rec	Acceptance Limit
2-Fluorobiphenyl		49	37-129
2-Fluorophenol		43	24-127
Nitrobenzene-d5		49	38-127
Phenol-d5		47	28-128
Terphenyl-d14		35	10-148
2,4,6-Tribromophenol		64	41-144

PQL = Practical quantitation limit
ND = Not detected at or above the MDL
P = The RPD between two GC columns exceeds 40%
J = Estimated result < PQL and ≥ MDL
N - Recovery is out of criteria
+ - RPD is out of criteria

Where applicable, all soil sample analysis are reported on a dry weight basis unless flagged with a "W"

Note: Calculations are performed before rounding to avoid round-off errors in calculated results

RCRA Metals - MB

Sample ID: MQ51507-001
Batch: 51507
Analytical Method: 6010C

Matrix: Aqueous
Prep Method: 3005A
Prep Date: 01/27/2011 1005

Parameter	Result	Q	Dil	PQL	MDL	Units	Analysis Date
Arsenic	ND		1	0.010	0.0040	mg/L	02/01/2011 0358
Barium	ND		1	0.025	0.0075	mg/L	02/01/2011 0358
Cadmium	ND		1	0.0020	0.00060	mg/L	02/01/2011 0358
Chromium	ND		1	0.0050	0.0021	mg/L	02/01/2011 0358
Lead	ND		1	0.010	0.0019	mg/L	02/01/2011 0358
Selenium	ND		1	0.010	0.0026	mg/L	02/01/2011 0358
Silver	ND		1	0.0050	0.00040	mg/L	02/01/2011 0358

PQL = Practical quantitation limit
ND = Not detected at or above the MDL
P = The RPD between two GC columns exceeds 40%
J = Estimated result < PQL and ≥ MDL
N - Recovery is out of criteria
+ - RPD is out of criteria

Where applicable, all soil sample analysis are reported on a dry weight basis unless flagged with a "W"

Note: Calculations are performed before rounding to avoid round-off errors in calculated results

RCRA Metals - LCS

Sample ID: MQ51507-002
Batch: 51507
Analytical Method: 6010C

Matrix: Aqueous
Prep Method: 3005A
Prep Date: 01/27/2011 1005

Parameter	Spike Amount (mg/L)	Result (mg/L)	Q	Dil	% Rec	% Rec Limit	Analysis Date
Arsenic	0.40	0.41		1	101	80-120	02/01/2011 0401
Barium	2.0	2.0		1	99	80-120	02/01/2011 0401
Cadmium	0.40	0.36		1	91	80-120	02/01/2011 0401
Chromium	2.0	1.9		1	96	80-120	02/01/2011 0401
Lead	0.40	0.39		1	98	80-120	02/01/2011 0401
Selenium	0.40	0.40		1	99	80-120	02/01/2011 0401
Silver	0.40	0.39		1	97	80-120	02/01/2011 0401

PQL = Practical quantitation limit
ND = Not detected at or above the MDL
P = The RPD between two GC columns exceeds 40%
J = Estimated result < PQL and ≥ MDL
N - Recovery is out of criteria
+ - RPD is out of criteria

Where applicable, all soil sample analysis are reported on a dry weight basis unless flagged with a "W"

Note: Calculations are performed before rounding to avoid round-off errors in calculated results

RCRA Metals - LCSD

Sample ID: MQ51507-003
Batch: 51507
Analytical Method: 6010C

Matrix: Aqueous
Prep Method: 3005A
Prep Date: 01/27/2011 1005

Parameter	Spike Amount (mg/L)	Result (mg/L)	Q	Dil	% Rec	% RPD	% Rec Limit	% RPD Limit	Analysis Date
Arsenic	0.40	0.42		1	104	2.9	80-120	20	02/01/2011 0405
Barium	2.0	2.0		1	101	2.0	80-120	20	02/01/2011 0405
Cadmium	0.40	0.37		1	94	3.1	80-120	20	02/01/2011 0405
Chromium	2.0	1.9		1	97	1.6	80-120	20	02/01/2011 0405
Lead	0.40	0.39		1	98	0.57	80-120	20	02/01/2011 0405
Selenium	0.40	0.41		1	103	3.4	80-120	20	02/01/2011 0405
Silver	0.40	0.39		1	98	1.6	80-120	20	02/01/2011 0405

PQL = Practical quantitation limit
ND = Not detected at or above the MDL
P = The RPD between two GC columns exceeds 40%
J = Estimated result < PQL and ≥ MDL
N - Recovery is out of criteria
+ - RPD is out of criteria

Where applicable, all soil sample analysis are reported on a dry weight basis unless flagged with a "W"

Note: Calculations are performed before rounding to avoid round-off errors in calculated results

RCRA Metals - MB

Sample ID: MQ51574-001
Batch: 51574
Analytical Method: 6010C

Matrix: Aqueous
Prep Method: 3005A
Prep Date: 01/28/2011 915

Parameter	Result	Q	Dil	PQL	MDL	Units	Analysis Date
Arsenic	0.0054	J	1	0.010	0.0040	mg/L	01/31/2011 2352
Barium	ND		1	0.025	0.0075	mg/L	01/31/2011 2352
Cadmium	ND		1	0.0020	0.00060	mg/L	01/31/2011 2352
Chromium	ND		1	0.0050	0.0021	mg/L	01/31/2011 2352
Lead	ND		1	0.010	0.0019	mg/L	01/31/2011 2352
Selenium	ND		1	0.010	0.0026	mg/L	01/31/2011 2352
Silver	ND		1	0.0050	0.00040	mg/L	01/31/2011 2352

PQL = Practical quantitation limit
ND = Not detected at or above the MDL
P = The RPD between two GC columns exceeds 40%
J = Estimated result < PQL and ≥ MDL
N - Recovery is out of criteria
+ - RPD is out of criteria

Where applicable, all soil sample analysis are reported on a dry weight basis unless flagged with a "W"

Note: Calculations are performed before rounding to avoid round-off errors in calculated results

RCRA Metals - LCS

Sample ID: MQ51574-002
Batch: 51574
Analytical Method: 6010C

Matrix: Aqueous
Prep Method: 3005A
Prep Date: 01/28/2011 915

Parameter	Spike Amount (mg/L)	Result (mg/L)	Q	Dil	% Rec	% Rec Limit	Analysis Date
Arsenic	0.40	0.40		1	100	80-120	01/31/2011 2359
Barium	2.0	1.9		1	94	80-120	01/31/2011 2359
Cadmium	0.40	0.40		1	99	80-120	01/31/2011 2359
Chromium	2.0	2.0		1	98	80-120	01/31/2011 2359
Lead	0.40	0.39		1	99	80-120	01/31/2011 2359
Selenium	0.40	0.43		1	108	80-120	01/31/2011 2359
Silver	0.40	0.39		1	99	80-120	01/31/2011 2359

PQL = Practical quantitation limit
ND = Not detected at or above the MDL
P = The RPD between two GC columns exceeds 40%
J = Estimated result < PQL and ≥ MDL
N - Recovery is out of criteria
+ - RPD is out of criteria

Where applicable, all soil sample analysis are reported on a dry weight basis unless flagged with a "W"

Note: Calculations are performed before rounding to avoid round-off errors in calculated results

RCRA Metals - LCSD

Sample ID: MQ51574-003
Batch: 51574
Analytical Method: 6010C

Matrix: Aqueous
Prep Method: 3005A
Prep Date: 01/28/2011 915

Parameter	Spike Amount (mg/L)	Result (mg/L)	Q	Dil	% Rec	% RPD	% Rec Limit	% RPD Limit	Analysis Date
Arsenic	0.40	0.39		1	98	2.2	80-120	20	02/01/2011 0006
Barium	2.0	1.8		1	92	2.3	80-120	20	02/01/2011 0006
Cadmium	0.40	0.39		1	98	1.4	80-120	20	02/01/2011 0006
Chromium	2.0	2.0		1	98	0.48	80-120	20	02/01/2011 0006
Lead	0.40	0.39		1	98	0.90	80-120	20	02/01/2011 0006
Selenium	0.40	0.43		1	108	0.44	80-120	20	02/01/2011 0006
Silver	0.40	0.39		1	98	0.89	80-120	20	02/01/2011 0006

PQL = Practical quantitation limit
ND = Not detected at or above the MDL
P = The RPD between two GC columns exceeds 40%
J = Estimated result < PQL and ≥ MDL
N - Recovery is out of criteria
+ - RPD is out of criteria

Where applicable, all soil sample analysis are reported on a dry weight basis unless flagged with a "W"

Note: Calculations are performed before rounding to avoid round-off errors in calculated results

Dissolved RCRA Metals - MB

Sample ID: MQ51574-001
Batch: 51574
Analytical Method: 6010C

Matrix: Aqueous
Prep Method: 3005A
Prep Date: 01/28/2011 915

Parameter	Result	Q	Dil	PQL	MDL	Units	Analysis Date
Dissolved Arsenic	0.0054	J	1	0.010	0.0040	mg/L	01/31/2011 2352
Dissolved Barium	ND		1	0.025	0.0075	mg/L	01/31/2011 2352
Dissolved Cadmium	ND		1	0.0020	0.00060	mg/L	01/31/2011 2352
Dissolved Chromium	ND		1	0.0050	0.0021	mg/L	01/31/2011 2352
Dissolved Lead	ND		1	0.010	0.0019	mg/L	01/31/2011 2352
Dissolved Selenium	ND		1	0.010	0.0026	mg/L	01/31/2011 2352
Dissolved Silver	ND		1	0.0050	0.00040	mg/L	01/31/2011 2352

PQL = Practical quantitation limit
ND = Not detected at or above the MDL
P = The RPD between two GC columns exceeds 40%
J = Estimated result < PQL and ≥ MDL
N - Recovery is out of criteria
+ - RPD is out of criteria

Where applicable, all soil sample analysis are reported on a dry weight basis unless flagged with a "W"

Note: Calculations are performed before rounding to avoid round-off errors in calculated results

Dissolved RCRA Metals - LCS

Sample ID: MQ51574-002
Batch: 51574
Analytical Method: 6010C

Matrix: Aqueous
Prep Method: 3005A
Prep Date: 01/28/2011 915

Parameter	Spike Amount (mg/L)	Result (mg/L)	Q	Dil	% Rec	% Rec Limit	Analysis Date
Dissolved Arsenic	0.40	0.40		1	100	80-120	01/31/2011 2359
Dissolved Barium	2.0	1.9		1	94	80-120	01/31/2011 2359
Dissolved Cadmium	0.40	0.40		1	99	80-120	01/31/2011 2359
Dissolved Chromium	2.0	2.0		1	98	80-120	01/31/2011 2359
Dissolved Lead	0.40	0.39		1	99	80-120	01/31/2011 2359
Dissolved Selenium	0.40	0.43		1	108	80-120	01/31/2011 2359
Dissolved Silver	0.40	0.39		1	99	80-120	01/31/2011 2359

PQL = Practical quantitation limit
ND = Not detected at or above the MDL
P = The RPD between two GC columns exceeds 40%
J = Estimated result < PQL and ≥ MDL
N - Recovery is out of criteria
+ - RPD is out of criteria

Where applicable, all soil sample analysis are reported on a dry weight basis unless flagged with a "W"

Note: Calculations are performed before rounding to avoid round-off errors in calculated results

Dissolved RCRA Metals - LCSD

Sample ID: MQ51574-003
Batch: 51574
Analytical Method: 6010C

Matrix: Aqueous
Prep Method: 3005A
Prep Date: 01/28/2011 915

Parameter	Spike Amount (mg/L)	Result (mg/L)	Q	Dil	% Rec	% RPD	% Rec Limit	% RPD Limit	Analysis Date
Dissolved Arsenic	0.40	0.39		1	98	2.2	80-120	20	02/01/2011 0006
Dissolved Barium	2.0	1.8		1	92	2.3	80-120	20	02/01/2011 0006
Dissolved Cadmium	0.40	0.39		1	98	1.4	80-120	20	02/01/2011 0006
Dissolved Chromium	2.0	2.0		1	98	0.48	80-120	20	02/01/2011 0006
Dissolved Lead	0.40	0.39		1	98	0.90	80-120	20	02/01/2011 0006
Dissolved Selenium	0.40	0.43		1	108	0.44	80-120	20	02/01/2011 0006
Dissolved Silver	0.40	0.39		1	98	0.89	80-120	20	02/01/2011 0006

PQL = Practical quantitation limit
ND = Not detected at or above the MDL
P = The RPD between two GC columns exceeds 40%
J = Estimated result < PQL and ≥ MDL
N - Recovery is out of criteria
+ - RPD is out of criteria

Where applicable, all soil sample analysis are reported on a dry weight basis unless flagged with a "W"

Note: Calculations are performed before rounding to avoid round-off errors in calculated results

Dissolved RCRA Metals - MB

Sample ID: MQ51655-001
Batch: 51655
Analytical Method: 6010C

Matrix: Aqueous
Prep Method: 3005A
Prep Date: 01/28/2011 1810

Parameter	Result	Q	Dil	PQL	MDL	Units	Analysis Date
Dissolved Arsenic	ND		1	0.010	0.0040	mg/L	01/31/2011 2019
Dissolved Barium	ND		1	0.025	0.0075	mg/L	01/31/2011 2019
Dissolved Cadmium	ND		1	0.0020	0.00060	mg/L	01/31/2011 2019
Dissolved Chromium	ND		1	0.0050	0.0021	mg/L	01/31/2011 2019
Dissolved Lead	ND		1	0.010	0.0019	mg/L	01/31/2011 2019
Dissolved Selenium	ND		1	0.010	0.0026	mg/L	01/31/2011 2019
Dissolved Silver	ND		1	0.0050	0.00040	mg/L	01/31/2011 2019

PQL = Practical quantitation limit
ND = Not detected at or above the MDL
P = The RPD between two GC columns exceeds 40%
J = Estimated result < PQL and ≥ MDL
N - Recovery is out of criteria
+ - RPD is out of criteria

Where applicable, all soil sample analysis are reported on a dry weight basis unless flagged with a "W"

Note: Calculations are performed before rounding to avoid round-off errors in calculated results

Dissolved RCRA Metals - LCS

Sample ID: MQ51655-002
Batch: 51655
Analytical Method: 6010C

Matrix: Aqueous
Prep Method: 3005A
Prep Date: 01/28/2011 1810

Parameter	Spike Amount (mg/L)	Result (mg/L)	Q	Dil	% Rec	% Rec Limit	Analysis Date
Dissolved Arsenic	0.40	0.41		1	103	80-120	01/31/2011 2026
Dissolved Barium	2.0	1.9		1	96	80-120	01/31/2011 2026
Dissolved Cadmium	0.40	0.41		1	102	80-120	01/31/2011 2026
Dissolved Chromium	2.0	2.0		1	102	80-120	01/31/2011 2026
Dissolved Lead	0.40	0.40		1	101	80-120	01/31/2011 2026
Dissolved Selenium	0.40	0.44		1	111	80-120	01/31/2011 2026
Dissolved Silver	0.40	0.40		1	101	80-120	01/31/2011 2026

PQL = Practical quantitation limit
ND = Not detected at or above the MDL
P = The RPD between two GC columns exceeds 40%
J = Estimated result < PQL and ≥ MDL
N - Recovery is out of criteria
+ - RPD is out of criteria

Where applicable, all soil sample analysis are reported on a dry weight basis unless flagged with a "W"

Note: Calculations are performed before rounding to avoid round-off errors in calculated results

Dissolved RCRA Metals - LCSD

Sample ID: MQ51655-003
Batch: 51655
Analytical Method: 6010C

Matrix: Aqueous
Prep Method: 3005A
Prep Date: 01/28/2011 1810

Parameter	Spike Amount (mg/L)	Result (mg/L)	Q	Dil	% Rec	% RPD	% Rec Limit	% RPD Limit	Analysis Date
Dissolved Arsenic	0.40	0.41		1	101	1.9	80-120	20	01/31/2011 2033
Dissolved Barium	2.0	1.9		1	94	2.5	80-120	20	01/31/2011 2033
Dissolved Cadmium	0.40	0.40		1	100	2.2	80-120	20	01/31/2011 2033
Dissolved Chromium	2.0	2.0		1	98	3.7	80-120	20	01/31/2011 2033
Dissolved Lead	0.40	0.39		1	98	2.4	80-120	20	01/31/2011 2033
Dissolved Selenium	0.40	0.44		1	110	0.34	80-120	20	01/31/2011 2033
Dissolved Silver	0.40	0.40		1	99	2.0	80-120	20	01/31/2011 2033

PQL = Practical quantitation limit
ND = Not detected at or above the MDL
P = The RPD between two GC columns exceeds 40%
J = Estimated result < PQL and ≥ MDL
N - Recovery is out of criteria
+ - RPD is out of criteria

Where applicable, all soil sample analysis are reported on a dry weight basis unless flagged with a "W"

Note: Calculations are performed before rounding to avoid round-off errors in calculated results

Dissolved RCRA Metals - MS

Sample ID: MA26019-009MS
Batch: 51655
Analytical Method: 6010C

Matrix: Aqueous
Prep Method: 3005A
Prep Date: 01/28/2011 1810

Parameter	Sample Amount (mg/L)	Spike Amount (mg/L)	Result (mg/L)	Q	Dil	% Rec	% Rec Limit	Analysis Date
Dissolved Arsenic	ND	0.40	0.40		1	101	75-125	01/31/2011 2046
Dissolved Barium	0.034	2.0	1.9		1	95	75-125	01/31/2011 2046
Dissolved Cadmium	ND	0.40	0.40		1	100	75-125	01/31/2011 2046
Dissolved Chromium	ND	2.0	2.0		1	99	75-125	01/31/2011 2046
Dissolved Lead	ND	0.40	0.39		1	98	75-125	01/31/2011 2046
Dissolved Selenium	ND	0.40	0.43		1	108	75-125	01/31/2011 2046
Dissolved Silver	0.0016	0.40	0.40		1	99	75-125	01/31/2011 2046

PQL = Practical quantitation limit
ND = Not detected at or above the MDL
P = The RPD between two GC columns exceeds 40%
J = Estimated result < PQL and ≥ MDL
N - Recovery is out of criteria
+ - RPD is out of criteria

Where applicable, all soil sample analysis are reported on a dry weight basis unless flagged with a "W"

Note: Calculations are performed before rounding to avoid round-off errors in calculated results

Dissolved RCRA Metals - MSD

Sample ID: MA26019-009MD
Batch: 51655
Analytical Method: 6010C

Matrix: Aqueous
Prep Method: 3005A
Prep Date: 01/28/2011 1810

Parameter	Sample Amount (mg/L)	Spike Amount (mg/L)	Result (mg/L)	Q	Dil	% Rec	% RPD	% Rec Limit	% RPD Limit	Analysis Date
Dissolved Arsenic	ND	0.40	0.40		1	100	0.44	75-125	20	01/31/2011 2053
Dissolved Barium	0.034	2.0	1.9		1	94	1.4	75-125	20	01/31/2011 2053
Dissolved Cadmium	ND	0.40	0.40		1	99	1.5	75-125	20	01/31/2011 2053
Dissolved Chromium	ND	2.0	2.0		1	98	1.0	75-125	20	01/31/2011 2053
Dissolved Lead	ND	0.40	0.39		1	97	0.97	75-125	20	01/31/2011 2053
Dissolved Selenium	ND	0.40	0.43		1	107	0.55	75-125	20	01/31/2011 2053
Dissolved Silver	0.0016	0.40	0.40		1	99	0.14	75-125	20	01/31/2011 2053

PQL = Practical quantitation limit
ND = Not detected at or above the MDL
P = The RPD between two GC columns exceeds 40%
J = Estimated result < PQL and ≥ MDL
N - Recovery is out of criteria
+ - RPD is out of criteria

Where applicable, all soil sample analysis are reported on a dry weight basis unless flagged with a "W"

Note: Calculations are performed before rounding to avoid round-off errors in calculated results

Dissolved RCRA Metals - MS

Sample ID: MA26019-010MS
Batch: 51655
Analytical Method: 6010C

Matrix: Aqueous
Prep Method: 3005A
Prep Date: 01/28/2011 1810

Parameter	Sample Amount (mg/L)	Spike Amount (mg/L)	Result (mg/L)	Q	Dil	% Rec	% Rec Limit	Analysis Date
Dissolved Arsenic	ND	0.40	0.41		1	103	75-125	01/31/2011 2113
Dissolved Barium	0.033	2.0	2.0		1	98	75-125	01/31/2011 2113
Dissolved Cadmium	ND	0.40	0.41		1	102	75-125	01/31/2011 2113
Dissolved Chromium	ND	2.0	2.0		1	101	75-125	01/31/2011 2113
Dissolved Lead	ND	0.40	0.40		1	99	75-125	01/31/2011 2113
Dissolved Selenium	ND	0.40	0.44		1	110	75-125	01/31/2011 2113
Dissolved Silver	ND	0.40	0.40		1	101	75-125	01/31/2011 2113

PQL = Practical quantitation limit
ND = Not detected at or above the MDL
P = The RPD between two GC columns exceeds 40%
J = Estimated result < PQL and ≥ MDL
N - Recovery is out of criteria
+ - RPD is out of criteria

Where applicable, all soil sample analysis are reported on a dry weight basis unless flagged with a "W"

Note: Calculations are performed before rounding to avoid round-off errors in calculated results

RCRA Metals - MB

Sample ID: MQ51695-001
Batch: 51695
Analytical Method: 6010C

Matrix: Aqueous
Prep Method: 3005A
Prep Date: 01/31/2011 1050

Parameter	Result	Q	Dil	PQL	MDL	Units	Analysis Date
Arsenic	0.0040	J	1	0.010	0.0040	mg/L	02/01/2011 2136
Barium	ND		1	0.025	0.0075	mg/L	02/01/2011 2136
Cadmium	0.00064	J	1	0.0020	0.00060	mg/L	02/01/2011 2136
Chromium	0.0029	J	1	0.0050	0.0021	mg/L	02/01/2011 2136
Lead	ND		1	0.010	0.0019	mg/L	02/01/2011 2136
Selenium	ND		1	0.010	0.0026	mg/L	02/01/2011 2136
Silver	ND		1	0.0050	0.00040	mg/L	02/01/2011 2136

PQL = Practical quantitation limit
ND = Not detected at or above the MDL
P = The RPD between two GC columns exceeds 40%
J = Estimated result < PQL and ≥ MDL
N - Recovery is out of criteria
+ - RPD is out of criteria

Where applicable, all soil sample analysis are reported on a dry weight basis unless flagged with a "W"

Note: Calculations are performed before rounding to avoid round-off errors in calculated results

RCRA Metals - LCS

Sample ID: MQ51695-002
Batch: 51695
Analytical Method: 6010C

Matrix: Aqueous
Prep Method: 3005A
Prep Date: 01/31/2011 1050

Parameter	Spike Amount (mg/L)	Result (mg/L)	Q	Dil	% Rec	% Rec Limit	Analysis Date
Arsenic	0.40	0.41		1	101	80-120	02/01/2011 2140
Barium	2.0	2.0		1	100	80-120	02/01/2011 2140
Cadmium	0.40	0.35		1	87	80-120	02/01/2011 2140
Chromium	2.0	1.9		1	97	80-120	02/01/2011 2140
Lead	0.40	0.37		1	93	80-120	02/01/2011 2140
Selenium	0.40	0.39		1	98	80-120	02/01/2011 2140
Silver	0.40	0.38		1	95	80-120	02/01/2011 2140

PQL = Practical quantitation limit
ND = Not detected at or above the MDL
P = The RPD between two GC columns exceeds 40%
J = Estimated result < PQL and ≥ MDL
N - Recovery is out of criteria
+ - RPD is out of criteria

Where applicable, all soil sample analysis are reported on a dry weight basis unless flagged with a "W"

Note: Calculations are performed before rounding to avoid round-off errors in calculated results

RCRA Metals - LCSD

Sample ID: MQ51695-003
Batch: 51695
Analytical Method: 6010C

Matrix: Aqueous
Prep Method: 3005A
Prep Date: 01/31/2011 1050

Parameter	Spike Amount (mg/L)	Result (mg/L)	Q	Dil	% Rec	% RPD	% Rec Limit	% RPD Limit	Analysis Date
Arsenic	0.40	0.41		1	103	1.4	80-120	20	02/01/2011 2143
Barium	2.0	1.9		1	97	2.2	80-120	20	02/01/2011 2143
Cadmium	0.40	0.35		1	87	0.11	80-120	20	02/01/2011 2143
Chromium	2.0	1.9		1	96	1.5	80-120	20	02/01/2011 2143
Lead	0.40	0.38		1	95	1.5	80-120	20	02/01/2011 2143
Selenium	0.40	0.39		1	96	1.9	80-120	20	02/01/2011 2143
Silver	0.40	0.37		1	93	2.2	80-120	20	02/01/2011 2143

PQL = Practical quantitation limit
ND = Not detected at or above the MDL
P = The RPD between two GC columns exceeds 40%
J = Estimated result < PQL and ≥ MDL
N - Recovery is out of criteria
+ - RPD is out of criteria

Where applicable, all soil sample analysis are reported on a dry weight basis unless flagged with a "W"

Note: Calculations are performed before rounding to avoid round-off errors in calculated results

RCRA Metals - MS

Sample ID: MA26019-015MS
Batch: 51695
Analytical Method: 6010C

Matrix: Aqueous
Prep Method: 3005A
Prep Date: 01/31/2011 1050

Parameter	Sample Amount (mg/L)	Spike Amount (mg/L)	Result (mg/L)	Q	Dil	% Rec	% Rec Limit	Analysis Date
Arsenic	0.0074	0.40	0.41		1	100	75-125	02/01/2011 2151
Barium	0.022	2.0	2.0		1	98	75-125	02/01/2011 2151
Cadmium	ND	0.40	0.35		1	88	75-125	02/01/2011 2151
Chromium	0.0053	2.0	1.9		1	96	75-125	02/01/2011 2151
Lead	ND	0.40	0.38		1	95	75-125	02/01/2011 2151
Selenium	ND	0.40	0.39		1	97	75-125	02/01/2011 2151
Silver	ND	0.40	0.38		1	94	75-125	02/01/2011 2151

PQL = Practical quantitation limit
ND = Not detected at or above the MDL
P = The RPD between two GC columns exceeds 40%
J = Estimated result < PQL and ≥ MDL
N - Recovery is out of criteria
+ - RPD is out of criteria

Where applicable, all soil sample analysis are reported on a dry weight basis unless flagged with a "W"

Note: Calculations are performed before rounding to avoid round-off errors in calculated results

RCRA Metals - MSD

Sample ID: MA26019-015MD
Batch: 51695
Analytical Method: 6010C

Matrix: Aqueous
Prep Method: 3005A
Prep Date: 01/31/2011 1050

Parameter	Sample Amount (mg/L)	Spike Amount (mg/L)	Result (mg/L)	Q	Dil	% Rec	% RPD	% Rec Limit	% RPD Limit	Analysis Date
Arsenic	0.0074	0.40	0.42		1	104	3.9	75-125	20	02/01/2011 2155
Barium	0.022	2.0	2.0		1	99	1.1	75-125	20	02/01/2011 2155
Cadmium	ND	0.40	0.36		1	90	1.8	75-125	20	02/01/2011 2155
Chromium	0.0053	2.0	1.9		1	96	0.046	75-125	20	02/01/2011 2155
Lead	ND	0.40	0.39		1	96	0.99	75-125	20	02/01/2011 2155
Selenium	ND	0.40	0.39		1	98	0.80	75-125	20	02/01/2011 2155
Silver	ND	0.40	0.38		1	94	0.48	75-125	20	02/01/2011 2155

PQL = Practical quantitation limit
ND = Not detected at or above the MDL
P = The RPD between two GC columns exceeds 40%
J = Estimated result < PQL and ≥ MDL
N - Recovery is out of criteria
+ - RPD is out of criteria

Where applicable, all soil sample analysis are reported on a dry weight basis unless flagged with a "W"

Note: Calculations are performed before rounding to avoid round-off errors in calculated results

RCRA Metals - MS

Sample ID: MA26019-021MS
Batch: 51695
Analytical Method: 6010C

Matrix: Aqueous
Prep Method: 3005A
Prep Date: 01/31/2011 1050

Parameter	Sample Amount (mg/L)	Spike Amount (mg/L)	Result (mg/L)	Q	Dil	% Rec	% Rec Limit	Analysis Date
Arsenic	ND	0.40	0.40		1	101	75-125	02/01/2011 2307
Barium	0.087	2.0	2.0		1	98	75-125	02/01/2011 2307
Cadmium	ND	0.40	0.35		1	88	75-125	02/01/2011 2307
Chromium	ND	2.0	1.9		1	95	75-125	02/01/2011 2307
Lead	ND	0.40	0.38		1	95	75-125	02/01/2011 2307
Selenium	ND	0.40	0.39		1	97	75-125	02/01/2011 2307
Silver	ND	0.40	0.38		1	94	75-125	02/01/2011 2307

PQL = Practical quantitation limit
ND = Not detected at or above the MDL
P = The RPD between two GC columns exceeds 40%
J = Estimated result < PQL and ≥ MDL
N - Recovery is out of criteria
+ - RPD is out of criteria

Where applicable, all soil sample analysis are reported on a dry weight basis unless flagged with a "W"

Note: Calculations are performed before rounding to avoid round-off errors in calculated results

RCRA Metals - MSD

Sample ID: MA26019-021MD
Batch: 51695
Analytical Method: 6010C

Matrix: Aqueous
Prep Method: 3005A
Prep Date: 01/31/2011 1050

Parameter	Sample Amount (mg/L)	Spike Amount (mg/L)	Result (mg/L)	Q	Dil	% Rec	% RPD	% Rec Limit	% RPD Limit	Analysis Date
Arsenic	ND	0.40	0.42		1	105	4.1	75-125	20	02/01/2011 2311
Barium	0.087	2.0	2.1		1	99	1.8	75-125	20	02/01/2011 2311
Cadmium	ND	0.40	0.36		1	90	2.6	75-125	20	02/01/2011 2311
Chromium	ND	2.0	1.9		1	96	1.6	75-125	20	02/01/2011 2311
Lead	ND	0.40	0.39		1	96	1.2	75-125	20	02/01/2011 2311
Selenium	ND	0.40	0.40		1	100	3.3	75-125	20	02/01/2011 2311
Silver	ND	0.40	0.38		1	94	0.23	75-125	20	02/01/2011 2311

PQL = Practical quantitation limit
ND = Not detected at or above the MDL
P = The RPD between two GC columns exceeds 40%
J = Estimated result < PQL and ≥ MDL
N - Recovery is out of criteria
+ - RPD is out of criteria

Where applicable, all soil sample analysis are reported on a dry weight basis unless flagged with a "W"

Note: Calculations are performed before rounding to avoid round-off errors in calculated results

Dissolved RCRA Metals - MB

Sample ID: MQ51695-001
Batch: 51695
Analytical Method: 6010C

Matrix: Aqueous
Prep Method: 3005A
Prep Date: 01/31/2011 1050

Parameter	Result	Q	Dil	PQL	MDL	Units	Analysis Date
Dissolved Arsenic	0.0040	J	1	0.010	0.0040	mg/L	02/01/2011 2136
Dissolved Barium	ND		1	0.025	0.0075	mg/L	02/01/2011 2136
Dissolved Cadmium	0.00064	J	1	0.0020	0.00060	mg/L	02/01/2011 2136
Dissolved Chromium	0.0029	J	1	0.0050	0.0021	mg/L	02/01/2011 2136
Dissolved Lead	ND		1	0.010	0.0019	mg/L	02/01/2011 2136
Dissolved Selenium	ND		1	0.010	0.0026	mg/L	02/01/2011 2136
Dissolved Silver	ND		1	0.0050	0.00040	mg/L	02/01/2011 2136

PQL = Practical quantitation limit
ND = Not detected at or above the MDL
P = The RPD between two GC columns exceeds 40%
J = Estimated result < PQL and ≥ MDL
N - Recovery is out of criteria
+ - RPD is out of criteria

Where applicable, all soil sample analysis are reported on a dry weight basis unless flagged with a "W"

Note: Calculations are performed before rounding to avoid round-off errors in calculated results

Dissolved RCRA Metals - LCS

Sample ID: MQ51695-002
Batch: 51695
Analytical Method: 6010C

Matrix: Aqueous
Prep Method: 3005A
Prep Date: 01/31/2011 1050

Parameter	Spike Amount (mg/L)	Result (mg/L)	Q	Dil	% Rec	% Rec Limit	Analysis Date
Dissolved Arsenic	0.40	0.41		1	101	80-120	02/01/2011 2140
Dissolved Barium	2.0	2.0		1	100	80-120	02/01/2011 2140
Dissolved Cadmium	0.40	0.35		1	87	80-120	02/01/2011 2140
Dissolved Chromium	2.0	1.9		1	97	80-120	02/01/2011 2140
Dissolved Lead	0.40	0.37		1	93	80-120	02/01/2011 2140
Dissolved Selenium	0.40	0.39		1	98	80-120	02/01/2011 2140
Dissolved Silver	0.40	0.38		1	95	80-120	02/01/2011 2140

PQL = Practical quantitation limit
ND = Not detected at or above the MDL
P = The RPD between two GC columns exceeds 40%
J = Estimated result < PQL and ≥ MDL
N - Recovery is out of criteria
+ - RPD is out of criteria

Where applicable, all soil sample analysis are reported on a dry weight basis unless flagged with a "W"

Note: Calculations are performed before rounding to avoid round-off errors in calculated results

Dissolved RCRA Metals - LCSD

Sample ID: MQ51695-003
Batch: 51695
Analytical Method: 6010C

Matrix: Aqueous
Prep Method: 3005A
Prep Date: 01/31/2011 1050

Parameter	Spike Amount (mg/L)	Result (mg/L)	Q	Dil	% Rec	% RPD	% Rec Limit	% RPD Limit	Analysis Date
Dissolved Arsenic	0.40	0.41		1	103	1.4	80-120	20	02/01/2011 2143
Dissolved Barium	2.0	1.9		1	97	2.2	80-120	20	02/01/2011 2143
Dissolved Cadmium	0.40	0.35		1	87	0.11	80-120	20	02/01/2011 2143
Dissolved Chromium	2.0	1.9		1	96	1.5	80-120	20	02/01/2011 2143
Dissolved Lead	0.40	0.38		1	95	1.5	80-120	20	02/01/2011 2143
Dissolved Selenium	0.40	0.39		1	96	1.9	80-120	20	02/01/2011 2143
Dissolved Silver	0.40	0.37		1	93	2.2	80-120	20	02/01/2011 2143

PQL = Practical quantitation limit
ND = Not detected at or above the MDL
P = The RPD between two GC columns exceeds 40%
J = Estimated result < PQL and ≥ MDL
N - Recovery is out of criteria
+ - RPD is out of criteria

Where applicable, all soil sample analysis are reported on a dry weight basis unless flagged with a "W"

Note: Calculations are performed before rounding to avoid round-off errors in calculated results

RCRA Metals - MB

Sample ID: MQ51696-001
Batch: 51696
Analytical Method: 6010C

Matrix: Aqueous
Prep Method: 3005A
Prep Date: 01/31/2011 1050

Parameter	Result	Q	Dil	PQL	MDL	Units	Analysis Date
Arsenic	ND		1	0.010	0.0040	mg/L	02/01/2011 2352
Barium	ND		1	0.025	0.0075	mg/L	02/01/2011 2352
Cadmium	ND		1	0.0020	0.00060	mg/L	02/01/2011 2352
Chromium	ND		1	0.0050	0.0021	mg/L	02/01/2011 2352
Lead	ND		1	0.010	0.0019	mg/L	02/01/2011 2352
Selenium	ND		1	0.010	0.0026	mg/L	02/01/2011 2352
Silver	0.00077	J	1	0.0050	0.00040	mg/L	02/01/2011 2352

PQL = Practical quantitation limit
ND = Not detected at or above the MDL
P = The RPD between two GC columns exceeds 40%
J = Estimated result < PQL and ≥ MDL
N - Recovery is out of criteria
+ - RPD is out of criteria

Where applicable, all soil sample analysis are reported on a dry weight basis unless flagged with a "W"

Note: Calculations are performed before rounding to avoid round-off errors in calculated results

RCRA Metals - LCS

Sample ID: MQ51696-002
Batch: 51696
Analytical Method: 6010C

Matrix: Aqueous
Prep Method: 3005A
Prep Date: 01/31/2011 1050

Parameter	Spike Amount (mg/L)	Result (mg/L)	Q	Dil	% Rec	% Rec Limit	Analysis Date
Arsenic	0.40	0.41		1	103	80-120	02/01/2011 2356
Barium	2.0	2.0		1	98	80-120	02/01/2011 2356
Cadmium	0.40	0.35		1	87	80-120	02/01/2011 2356
Chromium	2.0	1.9		1	97	80-120	02/01/2011 2356
Lead	0.40	0.38		1	94	80-120	02/01/2011 2356
Selenium	0.40	0.40		1	100	80-120	02/01/2011 2356
Silver	0.40	0.38		1	94	80-120	02/01/2011 2356

PQL = Practical quantitation limit
ND = Not detected at or above the MDL
P = The RPD between two GC columns exceeds 40%
J = Estimated result < PQL and ≥ MDL
N - Recovery is out of criteria
+ - RPD is out of criteria

Where applicable, all soil sample analysis are reported on a dry weight basis unless flagged with a "W"

Note: Calculations are performed before rounding to avoid round-off errors in calculated results

RCRA Metals - LCSD

Sample ID: MQ51696-003
Batch: 51696
Analytical Method: 6010C

Matrix: Aqueous
Prep Method: 3005A
Prep Date: 01/31/2011 1050

Parameter	Spike Amount (mg/L)	Result (mg/L)	Q	Dil	% Rec	% RPD	% Rec Limit	% RPD Limit	Analysis Date
Arsenic	0.40	0.41		1	101	1.2	80-120	20	02/02/2011 0000
Barium	2.0	1.9		1	96	3.0	80-120	20	02/02/2011 0000
Cadmium	0.40	0.35		1	87	0.39	80-120	20	02/02/2011 0000
Chromium	2.0	1.9		1	93	4.0	80-120	20	02/02/2011 0000
Lead	0.40	0.37		1	93	1.6	80-120	20	02/02/2011 0000
Selenium	0.40	0.38		1	96	3.4	80-120	20	02/02/2011 0000
Silver	0.40	0.36		1	91	3.2	80-120	20	02/02/2011 0000

PQL = Practical quantitation limit
ND = Not detected at or above the MDL
P = The RPD between two GC columns exceeds 40%
J = Estimated result < PQL and ≥ MDL
N - Recovery is out of criteria
+ - RPD is out of criteria

Where applicable, all soil sample analysis are reported on a dry weight basis unless flagged with a "W"

Note: Calculations are performed before rounding to avoid round-off errors in calculated results

RCRA Metals - MS

Sample ID: MA26019-027MS
Batch: 51696
Analytical Method: 6010C

Matrix: Aqueous
Prep Method: 3005A
Prep Date: 01/31/2011 1050

Parameter	Sample Amount (mg/L)	Spike Amount (mg/L)	Result (mg/L)	Q	Dil	% Rec	% Rec Limit	Analysis Date
Arsenic	ND	0.40	0.41		1	102	75-125	02/02/2011 0007
Barium	0.040	2.0	2.0		1	97	75-125	02/02/2011 0007
Cadmium	ND	0.40	0.35		1	88	75-125	02/02/2011 0007
Chromium	ND	2.0	1.9		1	96	75-125	02/02/2011 0007
Lead	0.0024	0.40	0.38		1	94	75-125	02/02/2011 0007
Selenium	ND	0.40	0.38		1	96	75-125	02/02/2011 0007
Silver	ND	0.40	0.37		1	93	75-125	02/02/2011 0007

PQL = Practical quantitation limit
ND = Not detected at or above the MDL
P = The RPD between two GC columns exceeds 40%
J = Estimated result < PQL and ≥ MDL
N - Recovery is out of criteria
+ - RPD is out of criteria

Where applicable, all soil sample analysis are reported on a dry weight basis unless flagged with a "W"

Note: Calculations are performed before rounding to avoid round-off errors in calculated results

RCRA Metals - MSD

Sample ID: MA26019-027MD
Batch: 51696
Analytical Method: 6010C

Matrix: Aqueous
Prep Method: 3005A
Prep Date: 01/31/2011 1050

Parameter	Sample Amount (mg/L)	Spike Amount (mg/L)	Result (mg/L)	Q	Dil	% Rec	% RPD	% Rec Limit	% RPD Limit	Analysis Date
Arsenic	ND	0.40	0.40		1	101	1.3	75-125	20	02/02/2011 0011
Barium	0.040	2.0	1.9		1	94	3.5	75-125	20	02/02/2011 0011
Cadmium	ND	0.40	0.34		1	85	3.3	75-125	20	02/02/2011 0011
Chromium	ND	2.0	1.8		1	92	3.5	75-125	20	02/02/2011 0011
Lead	0.0024	0.40	0.37		1	92	2.4	75-125	20	02/02/2011 0011
Selenium	ND	0.40	0.37		1	93	2.8	75-125	20	02/02/2011 0011
Silver	ND	0.40	0.36		1	89	4.1	75-125	20	02/02/2011 0011

PQL = Practical quantitation limit
ND = Not detected at or above the MDL
P = The RPD between two GC columns exceeds 40%
J = Estimated result < PQL and ≥ MDL
N - Recovery is out of criteria
+ - RPD is out of criteria

Where applicable, all soil sample analysis are reported on a dry weight basis unless flagged with a "W"

Note: Calculations are performed before rounding to avoid round-off errors in calculated results

RCRA Metals - MS

Sample ID: MA26019-028MS
Batch: 51696
Analytical Method: 6010C

Matrix: Aqueous
Prep Method: 3005A
Prep Date: 01/31/2011 1050

Parameter	Sample Amount (mg/L)	Spike Amount (mg/L)	Result (mg/L)	Q	Dil	% Rec	% Rec Limit	Analysis Date
Arsenic	0.0067	0.40	0.39		1	97	75-125	02/02/2011 0038
Barium	0.099	2.0	2.0		1	93	75-125	02/02/2011 0038
Cadmium	ND	0.40	0.34		1	84	75-125	02/02/2011 0038
Chromium	0.0032	2.0	1.8		1	91	75-125	02/02/2011 0038
Lead	0.0052	0.40	0.37		1	92	75-125	02/02/2011 0038
Selenium	ND	0.40	0.38		1	94	75-125	02/02/2011 0038
Silver	ND	0.40	0.36		1	90	75-125	02/02/2011 0038

PQL = Practical quantitation limit
ND = Not detected at or above the MDL
P = The RPD between two GC columns exceeds 40%
J = Estimated result < PQL and ≥ MDL
N - Recovery is out of criteria
+ - RPD is out of criteria

Where applicable, all soil sample analysis are reported on a dry weight basis unless flagged with a "W"

Note: Calculations are performed before rounding to avoid round-off errors in calculated results

Dissolved RCRA Metals - MB

Sample ID: MQ51696-001
Batch: 51696
Analytical Method: 6010C

Matrix: Aqueous
Prep Method: 3005A
Prep Date: 01/31/2011 1050

Parameter	Result	Q	Dil	PQL	MDL	Units	Analysis Date
Dissolved Arsenic	ND		1	0.010	0.0040	mg/L	02/01/2011 2352
Dissolved Barium	ND		1	0.025	0.0075	mg/L	02/01/2011 2352
Dissolved Cadmium	ND		1	0.0020	0.00060	mg/L	02/01/2011 2352
Dissolved Chromium	ND		1	0.0050	0.0021	mg/L	02/01/2011 2352
Dissolved Lead	ND		1	0.010	0.0019	mg/L	02/01/2011 2352
Dissolved Selenium	ND		1	0.010	0.0026	mg/L	02/01/2011 2352
Dissolved Silver	0.00077	J	1	0.0050	0.00040	mg/L	02/01/2011 2352

PQL = Practical quantitation limit
ND = Not detected at or above the MDL
P = The RPD between two GC columns exceeds 40%
J = Estimated result < PQL and ≥ MDL
N - Recovery is out of criteria
+ - RPD is out of criteria

Where applicable, all soil sample analysis are reported on a dry weight basis unless flagged with a "W"

Note: Calculations are performed before rounding to avoid round-off errors in calculated results

Dissolved RCRA Metals - LCS

Sample ID: MQ51696-002
Batch: 51696
Analytical Method: 6010C

Matrix: Aqueous
Prep Method: 3005A
Prep Date: 01/31/2011 1050

Parameter	Spike Amount (mg/L)	Result (mg/L)	Q	Dil	% Rec	% Rec Limit	Analysis Date
Dissolved Arsenic	0.40	0.41		1	103	80-120	02/01/2011 2356
Dissolved Barium	2.0	2.0		1	98	80-120	02/01/2011 2356
Dissolved Cadmium	0.40	0.35		1	87	80-120	02/01/2011 2356
Dissolved Chromium	2.0	1.9		1	97	80-120	02/01/2011 2356
Dissolved Lead	0.40	0.38		1	94	80-120	02/01/2011 2356
Dissolved Selenium	0.40	0.40		1	100	80-120	02/01/2011 2356
Dissolved Silver	0.40	0.38		1	94	80-120	02/01/2011 2356

PQL = Practical quantitation limit
ND = Not detected at or above the MDL
P = The RPD between two GC columns exceeds 40%
J = Estimated result < PQL and ≥ MDL
N - Recovery is out of criteria
+ - RPD is out of criteria

Where applicable, all soil sample analysis are reported on a dry weight basis unless flagged with a "W"

Note: Calculations are performed before rounding to avoid round-off errors in calculated results

Dissolved RCRA Metals - LCSD

Sample ID: MQ51696-003
Batch: 51696
Analytical Method: 6010C

Matrix: Aqueous
Prep Method: 3005A
Prep Date: 01/31/2011 1050

Parameter	Spike Amount (mg/L)	Result (mg/L)	Q	Dil	% Rec	% RPD	% Rec Limit	% RPD Limit	Analysis Date
Dissolved Arsenic	0.40	0.41		1	101	1.2	80-120	20	02/02/2011 0000
Dissolved Barium	2.0	1.9		1	96	3.0	80-120	20	02/02/2011 0000
Dissolved Cadmium	0.40	0.35		1	87	0.39	80-120	20	02/02/2011 0000
Dissolved Chromium	2.0	1.9		1	93	4.0	80-120	20	02/02/2011 0000
Dissolved Lead	0.40	0.37		1	93	1.6	80-120	20	02/02/2011 0000
Dissolved Selenium	0.40	0.38		1	96	3.4	80-120	20	02/02/2011 0000
Dissolved Silver	0.40	0.36		1	91	3.2	80-120	20	02/02/2011 0000

PQL = Practical quantitation limit
ND = Not detected at or above the MDL
P = The RPD between two GC columns exceeds 40%
J = Estimated result < PQL and ≥ MDL
N - Recovery is out of criteria
+ - RPD is out of criteria

Where applicable, all soil sample analysis are reported on a dry weight basis unless flagged with a "W"

Note: Calculations are performed before rounding to avoid round-off errors in calculated results

RCRA Metals - MB

Sample ID: MQ51840-001
Batch: 51840
Analytical Method: 6010C

Matrix: Aqueous
Prep Method: 3005A
Prep Date: 02/01/2011 1220

Parameter	Result	Q	Dil	PQL	MDL	Units	Analysis Date
Arsenic	0.0042	J	1	0.010	0.0040	mg/L	02/02/2011 2120
Barium	ND		1	0.025	0.0075	mg/L	02/02/2011 2120
Cadmium	ND		1	0.0020	0.00060	mg/L	02/02/2011 2120
Chromium	ND		1	0.0050	0.0021	mg/L	02/02/2011 2120
Lead	0.0095	J	1	0.010	0.0019	mg/L	02/02/2011 2120
Selenium	ND		1	0.010	0.0026	mg/L	02/02/2011 2120
Silver	0.0018	J	1	0.0050	0.00040	mg/L	02/02/2011 2120

PQL = Practical quantitation limit
ND = Not detected at or above the MDL
P = The RPD between two GC columns exceeds 40%
J = Estimated result < PQL and ≥ MDL
N - Recovery is out of criteria
+ - RPD is out of criteria

Where applicable, all soil sample analysis are reported on a dry weight basis unless flagged with a "W"

Note: Calculations are performed before rounding to avoid round-off errors in calculated results

RCRA Metals - LCS

Sample ID: MQ51840-002
Batch: 51840
Analytical Method: 6010C

Matrix: Aqueous
Prep Method: 3005A
Prep Date: 02/01/2011 1220

Parameter	Spike Amount (mg/L)	Result (mg/L)	Q	Dil	% Rec	% Rec Limit	Analysis Date
Arsenic	0.40	0.40		1	101	80-120	02/02/2011 2124
Barium	2.0	2.0		1	101	80-120	02/02/2011 2124
Cadmium	0.40	0.39		1	97	80-120	02/02/2011 2124
Chromium	2.0	2.0		1	100	80-120	02/02/2011 2124
Lead	0.40	0.39		1	97	80-120	02/02/2011 2124
Selenium	0.40	0.41		1	101	80-120	02/02/2011 2124
Silver	0.40	0.41		1	102	80-120	02/02/2011 2124

PQL = Practical quantitation limit
ND = Not detected at or above the MDL
P = The RPD between two GC columns exceeds 40%
J = Estimated result < PQL and ≥ MDL
N - Recovery is out of criteria
+ - RPD is out of criteria

Where applicable, all soil sample analysis are reported on a dry weight basis unless flagged with a "W"

Note: Calculations are performed before rounding to avoid round-off errors in calculated results

RCRA Metals - LCSD

Sample ID: MQ51840-003
Batch: 51840
Analytical Method: 6010C

Matrix: Aqueous
Prep Method: 3005A
Prep Date: 02/01/2011 1220

Parameter	Spike Amount (mg/L)	Result (mg/L)	Q	Dil	% Rec	% RPD	% Rec Limit	% RPD Limit	Analysis Date
Arsenic	0.40	0.38		1	94	6.9	80-120	20	02/02/2011 2128
Barium	2.0	1.9		1	96	4.5	80-120	20	02/02/2011 2128
Cadmium	0.40	0.36		1	90	6.5	80-120	20	02/02/2011 2128
Chromium	2.0	1.9		1	95	5.8	80-120	20	02/02/2011 2128
Lead	0.40	0.38		1	95	2.5	80-120	20	02/02/2011 2128
Selenium	0.40	0.38		1	95	6.7	80-120	20	02/02/2011 2128
Silver	0.40	0.39		1	96	5.3	80-120	20	02/02/2011 2128

PQL = Practical quantitation limit
ND = Not detected at or above the MDL
P = The RPD between two GC columns exceeds 40%
J = Estimated result < PQL and ≥ MDL
N - Recovery is out of criteria
+ - RPD is out of criteria

Where applicable, all soil sample analysis are reported on a dry weight basis unless flagged with a "W"

Note: Calculations are performed before rounding to avoid round-off errors in calculated results

Dissolved RCRA Metals - MB

Sample ID: MQ51840-001
Batch: 51840
Analytical Method: 6010C

Matrix: Aqueous
Prep Method: 3005A
Prep Date: 02/01/2011 1220

Parameter	Result	Q	Dil	PQL	MDL	Units	Analysis Date
Dissolved Arsenic	0.0042	J	1	0.010	0.0040	mg/L	02/02/2011 2120
Dissolved Barium	ND		1	0.025	0.0075	mg/L	02/02/2011 2120
Dissolved Cadmium	ND		1	0.0020	0.00060	mg/L	02/02/2011 2120
Dissolved Chromium	ND		1	0.0050	0.0021	mg/L	02/02/2011 2120
Dissolved Lead	0.0095	J	1	0.010	0.0019	mg/L	02/02/2011 2120
Dissolved Selenium	ND		1	0.010	0.0026	mg/L	02/02/2011 2120
Dissolved Silver	0.0018	J	1	0.0050	0.00040	mg/L	02/02/2011 2120

PQL = Practical quantitation limit
ND = Not detected at or above the MDL
P = The RPD between two GC columns exceeds 40%
J = Estimated result < PQL and ≥ MDL
N - Recovery is out of criteria
+ - RPD is out of criteria

Where applicable, all soil sample analysis are reported on a dry weight basis unless flagged with a "W"

Note: Calculations are performed before rounding to avoid round-off errors in calculated results

Dissolved RCRA Metals - LCS

Sample ID: MQ51840-002
Batch: 51840
Analytical Method: 6010C

Matrix: Aqueous
Prep Method: 3005A
Prep Date: 02/01/2011 1220

Parameter	Spike Amount (mg/L)	Result (mg/L)	Q	Dil	% Rec	% Rec Limit	Analysis Date
Dissolved Arsenic	0.40	0.40		1	101	80-120	02/02/2011 2124
Dissolved Barium	2.0	2.0		1	101	80-120	02/02/2011 2124
Dissolved Cadmium	0.40	0.39		1	97	80-120	02/02/2011 2124
Dissolved Chromium	2.0	2.0		1	100	80-120	02/02/2011 2124
Dissolved Lead	0.40	0.39		1	97	80-120	02/02/2011 2124
Dissolved Selenium	0.40	0.41		1	101	80-120	02/02/2011 2124
Dissolved Silver	0.40	0.41		1	102	80-120	02/02/2011 2124

PQL = Practical quantitation limit
ND = Not detected at or above the MDL
P = The RPD between two GC columns exceeds 40%
J = Estimated result < PQL and ≥ MDL
N - Recovery is out of criteria
+ - RPD is out of criteria

Where applicable, all soil sample analysis are reported on a dry weight basis unless flagged with a "W"

Note: Calculations are performed before rounding to avoid round-off errors in calculated results

Dissolved RCRA Metals - LCSD

Sample ID: MQ51840-003
Batch: 51840
Analytical Method: 6010C

Matrix: Aqueous
Prep Method: 3005A
Prep Date: 02/01/2011 1220

Parameter	Spike Amount (mg/L)	Result (mg/L)	Q	Dil	% Rec	% RPD	% Rec Limit	% RPD Limit	Analysis Date
Dissolved Arsenic	0.40	0.38		1	94	6.9	80-120	20	02/02/2011 2128
Dissolved Barium	2.0	1.9		1	96	4.5	80-120	20	02/02/2011 2128
Dissolved Cadmium	0.40	0.36		1	90	6.5	80-120	20	02/02/2011 2128
Dissolved Chromium	2.0	1.9		1	95	5.8	80-120	20	02/02/2011 2128
Dissolved Lead	0.40	0.38		1	95	2.5	80-120	20	02/02/2011 2128
Dissolved Selenium	0.40	0.38		1	95	6.7	80-120	20	02/02/2011 2128
Dissolved Silver	0.40	0.39		1	96	5.3	80-120	20	02/02/2011 2128

PQL = Practical quantitation limit
ND = Not detected at or above the MDL
P = The RPD between two GC columns exceeds 40%
J = Estimated result < PQL and ≥ MDL
N - Recovery is out of criteria
+ - RPD is out of criteria

Where applicable, all soil sample analysis are reported on a dry weight basis unless flagged with a "W"

Note: Calculations are performed before rounding to avoid round-off errors in calculated results

RCRA Metals - MB

Sample ID: MQ51872-001
Batch: 51872
Analytical Method: 6010C

Matrix: Aqueous
Prep Method: 3005A
Prep Date: 02/01/2011 1820

Parameter	Result	Q	Dil	PQL	MDL	Units	Analysis Date
Arsenic	ND		1	0.010	0.0040	mg/L	02/02/2011 2332
Barium	ND		1	0.025	0.0075	mg/L	02/02/2011 2332
Cadmium	ND		1	0.0020	0.00060	mg/L	02/02/2011 2332
Chromium	ND		1	0.0050	0.0021	mg/L	02/02/2011 2332
Lead	ND		1	0.010	0.0019	mg/L	02/03/2011 1935
Selenium	ND		1	0.010	0.0026	mg/L	02/02/2011 2332
Silver	0.00073	J	1	0.0050	0.00040	mg/L	02/02/2011 2332

PQL = Practical quantitation limit
ND = Not detected at or above the MDL
P = The RPD between two GC columns exceeds 40%
J = Estimated result < PQL and ≥ MDL
N - Recovery is out of criteria
+ - RPD is out of criteria

Where applicable, all soil sample analysis are reported on a dry weight basis unless flagged with a "W"

Note: Calculations are performed before rounding to avoid round-off errors in calculated results

RCRA Metals - LCS

Sample ID: MQ51872-002
Batch: 51872
Analytical Method: 6010C

Matrix: Aqueous
Prep Method: 3005A
Prep Date: 02/01/2011 1820

Parameter	Spike Amount (mg/L)	Result (mg/L)	Q	Dil	% Rec	% Rec Limit	Analysis Date
Arsenic	0.40	0.38		1	96	80-120	02/02/2011 2336
Barium	2.0	2.0		1	98	80-120	02/02/2011 2336
Cadmium	0.40	0.37		1	94	80-120	02/02/2011 2336
Chromium	2.0	1.9		1	97	80-120	02/02/2011 2336
Lead	0.40	0.40		1	99	80-120	02/03/2011 1939
Selenium	0.40	0.39		1	96	80-120	02/02/2011 2336
Silver	0.40	0.39		1	98	80-120	02/02/2011 2336

PQL = Practical quantitation limit
ND = Not detected at or above the MDL
P = The RPD between two GC columns exceeds 40%
J = Estimated result < PQL and ≥ MDL
N - Recovery is out of criteria
+ - RPD is out of criteria

Where applicable, all soil sample analysis are reported on a dry weight basis unless flagged with a "W"

Note: Calculations are performed before rounding to avoid round-off errors in calculated results

RCRA Metals - LCSD

Sample ID: MQ51872-003
Batch: 51872
Analytical Method: 6010C

Matrix: Aqueous
Prep Method: 3005A
Prep Date: 02/01/2011 1820

Parameter	Spike Amount (mg/L)	Result (mg/L)	Q	Dil	% Rec	% RPD	% Rec Limit	% RPD Limit	Analysis Date
Arsenic	0.40	0.41		1	101	5.4	80-120	20	02/02/2011 2340
Barium	2.0	2.0		1	102	4.5	80-120	20	02/02/2011 2340
Cadmium	0.40	0.39		1	97	3.9	80-120	20	02/02/2011 2340
Chromium	2.0	2.0		1	102	5.2	80-120	20	02/02/2011 2340
Lead	0.40	0.41		1	103	4.0	80-120	20	02/03/2011 1943
Selenium	0.40	0.40		1	100	4.1	80-120	20	02/02/2011 2340
Silver	0.40	0.41		1	103	5.1	80-120	20	02/02/2011 2340

PQL = Practical quantitation limit
ND = Not detected at or above the MDL
P = The RPD between two GC columns exceeds 40%
J = Estimated result < PQL and ≥ MDL
N - Recovery is out of criteria
+ - RPD is out of criteria

Where applicable, all soil sample analysis are reported on a dry weight basis unless flagged with a "W"

Note: Calculations are performed before rounding to avoid round-off errors in calculated results

RCRA Metals - MS

Sample ID: MA26019-037MS
Batch: 51872
Analytical Method: 6010C

Matrix: Aqueous
Prep Method: 3005A
Prep Date: 02/01/2011 1820

Parameter	Sample Amount (mg/L)	Spike Amount (mg/L)	Result (mg/L)	Q	Dil	% Rec	% Rec Limit	Analysis Date
Arsenic	ND	0.40	0.41		1	102	75-125	02/02/2011 2347
Barium	0.0076	2.0	2.1		1	102	75-125	02/02/2011 2347
Cadmium	ND	0.40	0.40		1	99	75-125	02/02/2011 2347
Chromium	0.0062	2.0	2.0		1	102	75-125	02/02/2011 2347
Lead	0.010	0.40	0.40		1	97	75-125	02/02/2011 2347
Selenium	0.0045	0.40	0.41		1	102	75-125	02/02/2011 2347
Silver	0.00088	0.40	0.42		1	104	75-125	02/02/2011 2347

PQL = Practical quantitation limit
ND = Not detected at or above the MDL
P = The RPD between two GC columns exceeds 40%
J = Estimated result < PQL and ≥ MDL
N - Recovery is out of criteria
+ - RPD is out of criteria

Where applicable, all soil sample analysis are reported on a dry weight basis unless flagged with a "W"

Note: Calculations are performed before rounding to avoid round-off errors in calculated results

RCRA Metals - MSD

Sample ID: MA26019-037MD
Batch: 51872
Analytical Method: 6010C

Matrix: Aqueous
Prep Method: 3005A
Prep Date: 02/01/2011 1820

Parameter	Sample Amount (mg/L)	Spike Amount (mg/L)	Result (mg/L)	Q	Dil	% Rec	% RPD	% Rec Limit	% RPD Limit	Analysis Date
Arsenic	ND	0.40	0.41		1	102	0.11	75-125	20	02/02/2011 2351
Barium	0.0076	2.0	2.0		1	102	0.58	75-125	20	02/02/2011 2351
Cadmium	ND	0.40	0.40		1	100	0.46	75-125	20	02/02/2011 2351
Chromium	0.0062	2.0	2.1		1	103	1.2	75-125	20	02/02/2011 2351
Lead	0.010	0.40	0.39		1	94	2.4	75-125	20	02/02/2011 2351
Selenium	0.0045	0.40	0.40		1	100	2.2	75-125	20	02/02/2011 2351
Silver	0.00088	0.40	0.42		1	105	0.82	75-125	20	02/02/2011 2351

PQL = Practical quantitation limit
ND = Not detected at or above the MDL
P = The RPD between two GC columns exceeds 40%
J = Estimated result < PQL and ≥ MDL
N - Recovery is out of criteria
+ - RPD is out of criteria

Where applicable, all soil sample analysis are reported on a dry weight basis unless flagged with a "W"

Note: Calculations are performed before rounding to avoid round-off errors in calculated results

RCRA Metals - MS

Sample ID: MA26019-038MS
Batch: 51872
Analytical Method: 6010C

Matrix: Aqueous
Prep Method: 3005A
Prep Date: 02/01/2011 1820

Parameter	Sample Amount (mg/L)	Spike Amount (mg/L)	Result (mg/L)	Q	Dil	% Rec	% Rec Limit	Analysis Date
Arsenic	0.015	0.40	0.40		1	95	75-125	02/03/2011 0018
Barium	0.019	2.0	2.0		1	101	75-125	02/03/2011 0018
Cadmium	ND	0.40	0.40		1	99	75-125	02/03/2011 0018
Chromium	ND	2.0	2.0		1	101	75-125	02/03/2011 0018
Lead	0.0032	0.40	0.40		1	98	75-125	02/03/2011 0018
Selenium	ND	0.40	0.41		1	102	75-125	02/03/2011 0018
Silver	ND	0.40	0.37		1	92	75-125	02/03/2011 0018

PQL = Practical quantitation limit
ND = Not detected at or above the MDL
P = The RPD between two GC columns exceeds 40%
J = Estimated result < PQL and ≥ MDL
N - Recovery is out of criteria
+ - RPD is out of criteria

Where applicable, all soil sample analysis are reported on a dry weight basis unless flagged with a "W"

Note: Calculations are performed before rounding to avoid round-off errors in calculated results

Dissolved RCRA Metals - MB

Sample ID: MQ51872-001
Batch: 51872
Analytical Method: 6010C

Matrix: Aqueous
Prep Method: 3005A
Prep Date: 02/01/2011 1820

Parameter	Result	Q	Dil	PQL	MDL	Units	Analysis Date
Dissolved Arsenic	ND		1	0.010	0.0040	mg/L	02/02/2011 2332
Dissolved Barium	ND		1	0.025	0.0075	mg/L	02/02/2011 2332
Dissolved Cadmium	ND		1	0.0020	0.00060	mg/L	02/02/2011 2332
Dissolved Chromium	ND		1	0.0050	0.0021	mg/L	02/02/2011 2332
Dissolved Lead	ND		1	0.010	0.0019	mg/L	02/03/2011 1935
Dissolved Selenium	ND		1	0.010	0.0026	mg/L	02/02/2011 2332
Dissolved Silver	0.00073	J	1	0.0050	0.00040	mg/L	02/02/2011 2332

PQL = Practical quantitation limit
ND = Not detected at or above the MDL
P = The RPD between two GC columns exceeds 40%
J = Estimated result < PQL and ≥ MDL
N - Recovery is out of criteria
+ - RPD is out of criteria

Where applicable, all soil sample analysis are reported on a dry weight basis unless flagged with a "W"

Note: Calculations are performed before rounding to avoid round-off errors in calculated results

Dissolved RCRA Metals - LCS

Sample ID: MQ51872-002
Batch: 51872
Analytical Method: 6010C

Matrix: Aqueous
Prep Method: 3005A
Prep Date: 02/01/2011 1820

Parameter	Spike Amount (mg/L)	Result (mg/L)	Q	Dil	% Rec	% Rec Limit	Analysis Date
Dissolved Arsenic	0.40	0.38		1	96	80-120	02/02/2011 2336
Dissolved Barium	2.0	2.0		1	98	80-120	02/02/2011 2336
Dissolved Cadmium	0.40	0.37		1	94	80-120	02/02/2011 2336
Dissolved Chromium	2.0	1.9		1	97	80-120	02/02/2011 2336
Dissolved Lead	0.40	0.40		1	99	80-120	02/03/2011 1939
Dissolved Selenium	0.40	0.39		1	96	80-120	02/02/2011 2336
Dissolved Silver	0.40	0.39		1	98	80-120	02/02/2011 2336

PQL = Practical quantitation limit
ND = Not detected at or above the MDL
P = The RPD between two GC columns exceeds 40%
J = Estimated result < PQL and ≥ MDL
N - Recovery is out of criteria
+ - RPD is out of criteria

Where applicable, all soil sample analysis are reported on a dry weight basis unless flagged with a "W"

Note: Calculations are performed before rounding to avoid round-off errors in calculated results

Dissolved RCRA Metals - LCSD

Sample ID: MQ51872-003
Batch: 51872
Analytical Method: 6010C

Matrix: Aqueous
Prep Method: 3005A
Prep Date: 02/01/2011 1820

Parameter	Spike Amount (mg/L)	Result (mg/L)	Q	Dil	% Rec	% RPD	% Rec Limit	% RPD Limit	Analysis Date
Dissolved Arsenic	0.40	0.41		1	101	5.4	80-120	20	02/02/2011 2340
Dissolved Barium	2.0	2.0		1	102	4.5	80-120	20	02/02/2011 2340
Dissolved Cadmium	0.40	0.39		1	97	3.9	80-120	20	02/02/2011 2340
Dissolved Chromium	2.0	2.0		1	102	5.2	80-120	20	02/02/2011 2340
Dissolved Lead	0.40	0.41		1	103	4.0	80-120	20	02/03/2011 1943
Dissolved Selenium	0.40	0.40		1	100	4.1	80-120	20	02/02/2011 2340
Dissolved Silver	0.40	0.41		1	103	5.1	80-120	20	02/02/2011 2340

PQL = Practical quantitation limit
ND = Not detected at or above the MDL
P = The RPD between two GC columns exceeds 40%
J = Estimated result < PQL and ≥ MDL
N - Recovery is out of criteria
+ - RPD is out of criteria

Where applicable, all soil sample analysis are reported on a dry weight basis unless flagged with a "W"

Note: Calculations are performed before rounding to avoid round-off errors in calculated results

RCRA Metals - MB

Sample ID: MQ51589-001
Batch: 51589
Analytical Method: 7470A

Matrix: Aqueous
Prep Method: 7470A
Prep Date: 01/28/2011 1145

Parameter	Result	Q	Dil	PQL	MDL	Units	Analysis Date
Mercury	ND		1	0.00010	0.000053	mg/L	01/28/2011 1537

PQL = Practical quantitation limit
ND = Not detected at or above the MDL
P = The RPD between two GC columns exceeds 40%
J = Estimated result < PQL and ≥ MDL
N - Recovery is out of criteria
+ - RPD is out of criteria

Where applicable, all soil sample analysis are reported on a dry weight basis unless flagged with a "W"

Note: Calculations are performed before rounding to avoid round-off errors in calculated results

RCRA Metals - LCS

Sample ID: MQ51589-002
Batch: 51589
Analytical Method: 7470A

Matrix: Aqueous
Prep Method: 7470A
Prep Date: 01/28/2011 1145

Parameter	Spike Amount (mg/L)	Result (mg/L)	Q	Dil	% Rec	% Rec Limit	Analysis Date
Mercury	0.0020	0.0019		1	96	85-115	01/28/2011 1540

PQL = Practical quantitation limit
ND = Not detected at or above the MDL
P = The RPD between two GC columns exceeds 40%
J = Estimated result < PQL and ≥ MDL
N - Recovery is out of criteria
+ - RPD is out of criteria

Where applicable, all soil sample analysis are reported on a dry weight basis unless flagged with a "W"

Note: Calculations are performed before rounding to avoid round-off errors in calculated results

RCRA Metals - LCSD

Sample ID: MQ51589-003
Batch: 51589
Analytical Method: 7470A

Matrix: Aqueous
Prep Method: 7470A
Prep Date: 01/28/2011 1145

Parameter	Spike Amount (mg/L)	Result (mg/L)	Q	Dil	% Rec	% RPD	% Rec Limit	% RPD Limit	Analysis Date
Mercury	0.0020	0.0019		1	95	2.1	85-115	20	01/28/2011 1542

PQL = Practical quantitation limit
ND = Not detected at or above the MDL
P = The RPD between two GC columns exceeds 40%
J = Estimated result < PQL and ≥ MDL
N - Recovery is out of criteria
+ - RPD is out of criteria

Where applicable, all soil sample analysis are reported on a dry weight basis unless flagged with a "W"

Note: Calculations are performed before rounding to avoid round-off errors in calculated results

RCRA Metals - MS

Sample ID: MA26019-004MS
Batch: 51589
Analytical Method: 7470A

Matrix: Aqueous
Prep Method: 7470A
Prep Date: 01/28/2011 1145

Parameter	Sample Amount (mg/L)	Spike Amount (mg/L)	Result (mg/L)	Q	Dil	% Rec	% Rec Limit	Analysis Date
Mercury	ND	0.0020	0.0017		1	85	85-115	01/28/2011 1618

PQL = Practical quantitation limit
ND = Not detected at or above the MDL
P = The RPD between two GC columns exceeds 40%
J = Estimated result < PQL and ≥ MDL
N - Recovery is out of criteria
+ - RPD is out of criteria

Where applicable, all soil sample analysis are reported on a dry weight basis unless flagged with a "W"

Note: Calculations are performed before rounding to avoid round-off errors in calculated results

RCRA Metals - MSD

Sample ID: MA26019-004MD
Batch: 51589
Analytical Method: 7470A

Matrix: Aqueous
Prep Method: 7470A
Prep Date: 01/28/2011 1145

Parameter	Sample Amount (mg/L)	Spike Amount (mg/L)	Result (mg/L)	Q	Dil	% Rec	% RPD	% Rec Limit	% RPD Limit	Analysis Date
Mercury	ND	0.0020	0.0019		1	95	11	85-115	20	01/28/2011 1621

PQL = Practical quantitation limit
ND = Not detected at or above the MDL
P = The RPD between two GC columns exceeds 40%
J = Estimated result < PQL and ≥ MDL
N - Recovery is out of criteria
+ - RPD is out of criteria

Where applicable, all soil sample analysis are reported on a dry weight basis unless flagged with a "W"

Note: Calculations are performed before rounding to avoid round-off errors in calculated results

RCRA Metals - MS

Sample ID: MA26019-005MS
Batch: 51589
Analytical Method: 7470A

Matrix: Aqueous
Prep Method: 7470A
Prep Date: 01/28/2011 1145

Parameter	Sample Amount (mg/L)	Spike Amount (mg/L)	Result (mg/L)	Q	Dil	% Rec	% Rec Limit	Analysis Date
Mercury	0.000062	0.0020	0.0020		1	95	85-115	01/28/2011 1632

PQL = Practical quantitation limit
ND = Not detected at or above the MDL
P = The RPD between two GC columns exceeds 40%
J = Estimated result < PQL and ≥ MDL
N - Recovery is out of criteria
+ - RPD is out of criteria

Where applicable, all soil sample analysis are reported on a dry weight basis unless flagged with a "W"

Note: Calculations are performed before rounding to avoid round-off errors in calculated results

Dissolved RCRA Metals - MB

Sample ID: MQ51589-001
Batch: 51589
Analytical Method: 7470A

Matrix: Aqueous
Prep Method: 7470A
Prep Date: 01/28/2011 1145

Parameter	Result	Q	Dil	PQL	MDL	Units	Analysis Date
Dissolved Mercury	ND		1	0.00010	0.000053	mg/L	01/28/2011 1537

PQL = Practical quantitation limit
ND = Not detected at or above the MDL
P = The RPD between two GC columns exceeds 40%
J = Estimated result < PQL and ≥ MDL
N - Recovery is out of criteria
+ - RPD is out of criteria

Where applicable, all soil sample analysis are reported on a dry weight basis unless flagged with a "W"

Note: Calculations are performed before rounding to avoid round-off errors in calculated results

Dissolved RCRA Metals - LCS

Sample ID: MQ51589-002
Batch: 51589
Analytical Method: 7470A

Matrix: Aqueous
Prep Method: 7470A
Prep Date: 01/28/2011 1145

Parameter	Spike Amount (mg/L)	Result (mg/L)	Q	Dil	% Rec	% Rec Limit	Analysis Date
Dissolved Mercury	0.0020	0.0019		1	96	85-115	01/28/2011 1540

PQL = Practical quantitation limit
ND = Not detected at or above the MDL
P = The RPD between two GC columns exceeds 40%
J = Estimated result < PQL and ≥ MDL
N - Recovery is out of criteria
+ - RPD is out of criteria

Where applicable, all soil sample analysis are reported on a dry weight basis unless flagged with a "W"

Note: Calculations are performed before rounding to avoid round-off errors in calculated results

Dissolved RCRA Metals - LCSD

Sample ID: MQ51589-003
Batch: 51589
Analytical Method: 7470A

Matrix: Aqueous
Prep Method: 7470A
Prep Date: 01/28/2011 1145

Parameter	Spike Amount (mg/L)	Result (mg/L)	Q	Dil	% Rec	% RPD	% Rec Limit	% RPD Limit	Analysis Date
Dissolved Mercury	0.0020	0.0019		1	95	2.1	85-115	20	01/28/2011 1542

PQL = Practical quantitation limit
ND = Not detected at or above the MDL
P = The RPD between two GC columns exceeds 40%
J = Estimated result < PQL and ≥ MDL
N - Recovery is out of criteria
+ - RPD is out of criteria

Where applicable, all soil sample analysis are reported on a dry weight basis unless flagged with a "W"

Note: Calculations are performed before rounding to avoid round-off errors in calculated results

RCRA Metals - MB

Sample ID: MQ51591-001
Batch: 51591
Analytical Method: 7470A

Matrix: Aqueous
Prep Method: 7470A
Prep Date: 01/28/2011 1430

Parameter	Result	Q	Dil	PQL	MDL	Units	Analysis Date
Mercury	ND		1	0.00010	0.000053	mg/L	01/28/2011 1811

PQL = Practical quantitation limit
ND = Not detected at or above the MDL
P = The RPD between two GC columns exceeds 40%
J = Estimated result < PQL and ≥ MDL
N - Recovery is out of criteria
+ - RPD is out of criteria

Where applicable, all soil sample analysis are reported on a dry weight basis unless flagged with a "W"

Note: Calculations are performed before rounding to avoid round-off errors in calculated results

RCRA Metals - LCS

Sample ID: MQ51591-002
Batch: 51591
Analytical Method: 7470A

Matrix: Aqueous
Prep Method: 7470A
Prep Date: 01/28/2011 1430

Parameter	Spike Amount (mg/L)	Result (mg/L)	Q	Dil	% Rec	% Rec Limit	Analysis Date
Mercury	0.0020	0.0020		1	102	85-115	01/28/2011 1813

PQL = Practical quantitation limit
ND = Not detected at or above the MDL
P = The RPD between two GC columns exceeds 40%
J = Estimated result < PQL and ≥ MDL
N - Recovery is out of criteria
+ - RPD is out of criteria

Where applicable, all soil sample analysis are reported on a dry weight basis unless flagged with a "W"

Note: Calculations are performed before rounding to avoid round-off errors in calculated results

RCRA Metals - LCSD

Sample ID: MQ51591-003
Batch: 51591
Analytical Method: 7470A

Matrix: Aqueous
Prep Method: 7470A
Prep Date: 01/28/2011 1430

Parameter	Spike Amount (mg/L)	Result (mg/L)	Q	Dil	% Rec	% RPD	% Rec Limit	% RPD Limit	Analysis Date
Mercury	0.0020	0.0020		1	98	4.0	85-115	20	01/28/2011 1816

PQL = Practical quantitation limit
ND = Not detected at or above the MDL
P = The RPD between two GC columns exceeds 40%
J = Estimated result < PQL and ≥ MDL
N - Recovery is out of criteria
+ - RPD is out of criteria

Where applicable, all soil sample analysis are reported on a dry weight basis unless flagged with a "W"

Note: Calculations are performed before rounding to avoid round-off errors in calculated results

RCRA Metals - MS

Sample ID: MA26019-010MS
Batch: 51591
Analytical Method: 7470A

Matrix: Aqueous
Prep Method: 7470A
Prep Date: 01/28/2011 1430

Parameter	Sample Amount (mg/L)	Spike Amount (mg/L)	Result (mg/L)	Q	Dil	% Rec	% Rec Limit	Analysis Date
Mercury	ND	0.0020	0.0019		1	97	85-115	01/28/2011 1711

PQL = Practical quantitation limit
ND = Not detected at or above the MDL
P = The RPD between two GC columns exceeds 40%
J = Estimated result < PQL and ≥ MDL
N - Recovery is out of criteria
+ - RPD is out of criteria

Where applicable, all soil sample analysis are reported on a dry weight basis unless flagged with a "W"

Note: Calculations are performed before rounding to avoid round-off errors in calculated results

RCRA Metals - MSD

Sample ID: MA26019-010MD
Batch: 51591
Analytical Method: 7470A

Matrix: Aqueous
Prep Method: 7470A
Prep Date: 01/28/2011 1430

Parameter	Sample Amount (mg/L)	Spike Amount (mg/L)	Result (mg/L)	Q	Dil	% Rec	% RPD	% Rec Limit	% RPD Limit	Analysis Date
Mercury	ND	0.0020	0.0019		1	96	0.52	85-115	20	01/28/2011 1713

PQL = Practical quantitation limit
ND = Not detected at or above the MDL
P = The RPD between two GC columns exceeds 40%
J = Estimated result < PQL and ≥ MDL
N - Recovery is out of criteria
+ - RPD is out of criteria

Where applicable, all soil sample analysis are reported on a dry weight basis unless flagged with a "W"

Note: Calculations are performed before rounding to avoid round-off errors in calculated results

Dissolved RCRA Metals - MB

Sample ID: MQ51591-001
Batch: 51591
Analytical Method: 7470A

Matrix: Aqueous
Prep Method: 7470A
Prep Date: 01/28/2011 1430

Parameter	Result	Q	Dil	PQL	MDL	Units	Analysis Date
Dissolved Mercury	ND		1	0.00010	0.000053	mg/L	01/28/2011 1811

PQL = Practical quantitation limit
ND = Not detected at or above the MDL
P = The RPD between two GC columns exceeds 40%
J = Estimated result < PQL and ≥ MDL
N - Recovery is out of criteria
+ - RPD is out of criteria

Where applicable, all soil sample analysis are reported on a dry weight basis unless flagged with a "W"

Note: Calculations are performed before rounding to avoid round-off errors in calculated results

Dissolved RCRA Metals - LCS

Sample ID: MQ51591-002
Batch: 51591
Analytical Method: 7470A

Matrix: Aqueous
Prep Method: 7470A
Prep Date: 01/28/2011 1430

Parameter	Spike Amount (mg/L)	Result (mg/L)	Q	Dil	% Rec	% Rec Limit	Analysis Date
Dissolved Mercury	0.0020	0.0020		1	102	85-115	01/28/2011 1813

PQL = Practical quantitation limit
ND = Not detected at or above the MDL
P = The RPD between two GC columns exceeds 40%
J = Estimated result < PQL and ≥ MDL
N - Recovery is out of criteria
+ - RPD is out of criteria

Where applicable, all soil sample analysis are reported on a dry weight basis unless flagged with a "W"

Note: Calculations are performed before rounding to avoid round-off errors in calculated results

Dissolved RCRA Metals - LCSD

Sample ID: MQ51591-003
Batch: 51591
Analytical Method: 7470A

Matrix: Aqueous
Prep Method: 7470A
Prep Date: 01/28/2011 1430

Parameter	Spike Amount (mg/L)	Result (mg/L)	Q	Dil	% Rec	% RPD	% Rec Limit	% RPD Limit	Analysis Date
Dissolved Mercury	0.0020	0.0020		1	98	4.0	85-115	20	01/28/2011 1816

PQL = Practical quantitation limit
ND = Not detected at or above the MDL
P = The RPD between two GC columns exceeds 40%
J = Estimated result < PQL and ≥ MDL
N - Recovery is out of criteria
+ - RPD is out of criteria

Where applicable, all soil sample analysis are reported on a dry weight basis unless flagged with a "W"

Note: Calculations are performed before rounding to avoid round-off errors in calculated results

RCRA Metals - MB

Sample ID: MQ51804-001
Batch: 51804
Analytical Method: 7470A

Matrix: Aqueous
Prep Method: 7470A
Prep Date: 02/01/2011 1020

Parameter	Result	Q	Dil	PQL	MDL	Units	Analysis Date
Mercury	ND		1	0.00010	0.000053	mg/L	02/01/2011 1310

PQL = Practical quantitation limit
ND = Not detected at or above the MDL
P = The RPD between two GC columns exceeds 40%
J = Estimated result < PQL and ≥ MDL
N - Recovery is out of criteria
+ - RPD is out of criteria

Where applicable, all soil sample analysis are reported on a dry weight basis unless flagged with a "W"

Note: Calculations are performed before rounding to avoid round-off errors in calculated results

RCRA Metals - LCS

Sample ID: MQ51804-002
Batch: 51804
Analytical Method: 7470A

Matrix: Aqueous
Prep Method: 7470A
Prep Date: 02/01/2011 1020

Parameter	Spike Amount (mg/L)	Result (mg/L)	Q	Dil	% Rec	% Rec Limit	Analysis Date
Mercury	0.0020	0.0019		1	96	85-115	02/01/2011 1313

PQL = Practical quantitation limit
ND = Not detected at or above the MDL
P = The RPD between two GC columns exceeds 40%
J = Estimated result < PQL and ≥ MDL
N - Recovery is out of criteria
+ - RPD is out of criteria

Where applicable, all soil sample analysis are reported on a dry weight basis unless flagged with a "W"

Note: Calculations are performed before rounding to avoid round-off errors in calculated results

RCRA Metals - LCSD

Sample ID: MQ51804-003
Batch: 51804
Analytical Method: 7470A

Matrix: Aqueous
Prep Method: 7470A
Prep Date: 02/01/2011 1020

Parameter	Spike Amount (mg/L)	Result (mg/L)	Q	Dil	% Rec	% RPD	% Rec Limit	% RPD Limit	Analysis Date
Mercury	0.0020	0.0020		1	98	1.0	85-115	20	02/01/2011 1315

PQL = Practical quantitation limit
ND = Not detected at or above the MDL
P = The RPD between two GC columns exceeds 40%
J = Estimated result < PQL and ≥ MDL
N - Recovery is out of criteria
+ - RPD is out of criteria

Where applicable, all soil sample analysis are reported on a dry weight basis unless flagged with a "W"

Note: Calculations are performed before rounding to avoid round-off errors in calculated results

RCRA Metals - MS

Sample ID: MA26019-015MS
Batch: 51804
Analytical Method: 7470A

Matrix: Aqueous
Prep Method: 7470A
Prep Date: 02/01/2011 1020

Parameter	Sample Amount (mg/L)	Spike Amount (mg/L)	Result (mg/L)	Q	Dil	% Rec	% Rec Limit	Analysis Date
Mercury	0.000072	0.0020	0.0021		1	101	85-115	02/01/2011 1323

PQL = Practical quantitation limit
ND = Not detected at or above the MDL
P = The RPD between two GC columns exceeds 40%
J = Estimated result < PQL and ≥ MDL
N - Recovery is out of criteria
+ - RPD is out of criteria

Where applicable, all soil sample analysis are reported on a dry weight basis unless flagged with a "W"

Note: Calculations are performed before rounding to avoid round-off errors in calculated results

RCRA Metals - MSD

Sample ID: MA26019-015MD
Batch: 51804
Analytical Method: 7470A

Matrix: Aqueous
Prep Method: 7470A
Prep Date: 02/01/2011 1020

Parameter	Sample Amount (mg/L)	Spike Amount (mg/L)	Result (mg/L)	Q	Dil	% Rec	% RPD	% Rec Limit	% RPD Limit	Analysis Date
Mercury	0.000072	0.0020	0.0020		1	99	2.4	85-115	20	02/01/2011 1325

PQL = Practical quantitation limit
ND = Not detected at or above the MDL
P = The RPD between two GC columns exceeds 40%
J = Estimated result < PQL and ≥ MDL
N - Recovery is out of criteria
+ - RPD is out of criteria

Where applicable, all soil sample analysis are reported on a dry weight basis unless flagged with a "W"

Note: Calculations are performed before rounding to avoid round-off errors in calculated results

RCRA Metals - MS

Sample ID: MA26019-021MS
Batch: 51804
Analytical Method: 7470A

Matrix: Aqueous
Prep Method: 7470A
Prep Date: 02/01/2011 1020

Parameter	Sample Amount (mg/L)	Spike Amount (mg/L)	Result (mg/L)	Q	Dil	% Rec	% Rec Limit	Analysis Date
Mercury	ND	0.0020	0.0019		1	95	85-115	02/01/2011 1410

PQL = Practical quantitation limit
ND = Not detected at or above the MDL
P = The RPD between two GC columns exceeds 40%
J = Estimated result < PQL and ≥ MDL
N - Recovery is out of criteria
+ - RPD is out of criteria

Where applicable, all soil sample analysis are reported on a dry weight basis unless flagged with a "W"

Note: Calculations are performed before rounding to avoid round-off errors in calculated results

RCRA Metals - MSD

Sample ID: MA26019-021MD
Batch: 51804
Analytical Method: 7470A

Matrix: Aqueous
Prep Method: 7470A
Prep Date: 02/01/2011 1020

Parameter	Sample Amount (mg/L)	Spike Amount (mg/L)	Result (mg/L)	Q	Dil	% Rec	% RPD	% Rec Limit	% RPD Limit	Analysis Date
Mercury	ND	0.0020	0.0019		1	96	1.6	85-115	20	02/01/2011 1412

PQL = Practical quantitation limit
ND = Not detected at or above the MDL
P = The RPD between two GC columns exceeds 40%
J = Estimated result < PQL and ≥ MDL
N - Recovery is out of criteria
+ - RPD is out of criteria

Where applicable, all soil sample analysis are reported on a dry weight basis unless flagged with a "W"

Note: Calculations are performed before rounding to avoid round-off errors in calculated results

Dissolved RCRA Metals - MB

Sample ID: MQ51804-001
Batch: 51804
Analytical Method: 7470A

Matrix: Aqueous
Prep Method: 7470A
Prep Date: 02/01/2011 1020

Parameter	Result	Q	Dil	PQL	MDL	Units	Analysis Date
Dissolved Mercury	ND		1	0.00010	0.000053	mg/L	02/01/2011 1310

PQL = Practical quantitation limit
ND = Not detected at or above the MDL
P = The RPD between two GC columns exceeds 40%
J = Estimated result < PQL and ≥ MDL
N - Recovery is out of criteria
+ - RPD is out of criteria

Where applicable, all soil sample analysis are reported on a dry weight basis unless flagged with a "W"

Note: Calculations are performed before rounding to avoid round-off errors in calculated results

Dissolved RCRA Metals - LCS

Sample ID: MQ51804-002
Batch: 51804
Analytical Method: 7470A

Matrix: Aqueous
Prep Method: 7470A
Prep Date: 02/01/2011 1020

Parameter	Spike Amount (mg/L)	Result (mg/L)	Q	Dil	% Rec	% Rec Limit	Analysis Date
Dissolved Mercury	0.0020	0.0019		1	96	85-115	02/01/2011 1313

PQL = Practical quantitation limit
ND = Not detected at or above the MDL
P = The RPD between two GC columns exceeds 40%
J = Estimated result < PQL and ≥ MDL
N - Recovery is out of criteria
+ - RPD is out of criteria

Where applicable, all soil sample analysis are reported on a dry weight basis unless flagged with a "W"

Note: Calculations are performed before rounding to avoid round-off errors in calculated results

Dissolved RCRA Metals - LCSD

Sample ID: MQ51804-003
Batch: 51804
Analytical Method: 7470A

Matrix: Aqueous
Prep Method: 7470A
Prep Date: 02/01/2011 1020

Parameter	Spike Amount (mg/L)	Result (mg/L)	Q	Dil	% Rec	% RPD	% Rec Limit	% RPD Limit	Analysis Date
Dissolved Mercury	0.0020	0.0020		1	98	1.0	85-115	20	02/01/2011 1315

PQL = Practical quantitation limit
ND = Not detected at or above the MDL
P = The RPD between two GC columns exceeds 40%
J = Estimated result < PQL and ≥ MDL
N - Recovery is out of criteria
+ - RPD is out of criteria

Where applicable, all soil sample analysis are reported on a dry weight basis unless flagged with a "W"

Note: Calculations are performed before rounding to avoid round-off errors in calculated results

RCRA Metals - MB

Sample ID: MQ51805-001
Batch: 51805
Analytical Method: 7470A

Matrix: Aqueous
Prep Method: 7470A
Prep Date: 02/01/2011 1020

Parameter	Result	Q	Dil	PQL	MDL	Units	Analysis Date
Mercury	ND		1	0.00010	0.000053	mg/L	02/01/2011 1430

PQL = Practical quantitation limit
ND = Not detected at or above the MDL
P = The RPD between two GC columns exceeds 40%
J = Estimated result < PQL and ≥ MDL
N - Recovery is out of criteria
+ - RPD is out of criteria

Where applicable, all soil sample analysis are reported on a dry weight basis unless flagged with a "W"

Note: Calculations are performed before rounding to avoid round-off errors in calculated results

RCRA Metals - LCS

Sample ID: MQ51805-002
Batch: 51805
Analytical Method: 7470A

Matrix: Aqueous
Prep Method: 7470A
Prep Date: 02/01/2011 1020

Parameter	Spike Amount (mg/L)	Result (mg/L)	Q	Dil	% Rec	% Rec Limit	Analysis Date
Mercury	0.0020	0.0019		1	95	85-115	02/01/2011 1433

PQL = Practical quantitation limit
ND = Not detected at or above the MDL
P = The RPD between two GC columns exceeds 40%
J = Estimated result < PQL and ≥ MDL
N - Recovery is out of criteria
+ - RPD is out of criteria

Where applicable, all soil sample analysis are reported on a dry weight basis unless flagged with a "W"

Note: Calculations are performed before rounding to avoid round-off errors in calculated results

RCRA Metals - LCSD

Sample ID: MQ51805-003
Batch: 51805
Analytical Method: 7470A

Matrix: Aqueous
Prep Method: 7470A
Prep Date: 02/01/2011 1020

Parameter	Spike Amount (mg/L)	Result (mg/L)	Q	Dil	% Rec	% RPD	% Rec Limit	% RPD Limit	Analysis Date
Mercury	0.0020	0.0019		1	97	2.1	85-115	20	02/01/2011 1440

PQL = Practical quantitation limit
ND = Not detected at or above the MDL
P = The RPD between two GC columns exceeds 40%
J = Estimated result < PQL and ≥ MDL
N - Recovery is out of criteria
+ - RPD is out of criteria

Where applicable, all soil sample analysis are reported on a dry weight basis unless flagged with a "W"

Note: Calculations are performed before rounding to avoid round-off errors in calculated results

RCRA Metals - MS

Sample ID: MA26019-026MS
Batch: 51805
Analytical Method: 7470A

Matrix: Aqueous
Prep Method: 7470A
Prep Date: 02/01/2011 1020

Parameter	Sample Amount (mg/L)	Spike Amount (mg/L)	Result (mg/L)	Q	Dil	% Rec	% Rec Limit	Analysis Date
Mercury	ND	0.0020	0.0020		1	98	85-115	02/01/2011 1447

PQL = Practical quantitation limit
ND = Not detected at or above the MDL
P = The RPD between two GC columns exceeds 40%
J = Estimated result < PQL and ≥ MDL
N - Recovery is out of criteria
+ - RPD is out of criteria

Where applicable, all soil sample analysis are reported on a dry weight basis unless flagged with a "W"

Note: Calculations are performed before rounding to avoid round-off errors in calculated results

RCRA Metals - MSD

Sample ID: MA26019-026MD
Batch: 51805
Analytical Method: 7470A

Matrix: Aqueous
Prep Method: 7470A
Prep Date: 02/01/2011 1020

Parameter	Sample Amount (mg/L)	Spike Amount (mg/L)	Result (mg/L)	Q	Dil	% Rec	% RPD	% Rec Limit	% RPD Limit	Analysis Date
Mercury	ND	0.0020	0.0020		1	101	3.5	85-115	20	02/01/2011 1449

PQL = Practical quantitation limit
ND = Not detected at or above the MDL
P = The RPD between two GC columns exceeds 40%
J = Estimated result < PQL and ≥ MDL
N - Recovery is out of criteria
+ - RPD is out of criteria

Where applicable, all soil sample analysis are reported on a dry weight basis unless flagged with a "W"

Note: Calculations are performed before rounding to avoid round-off errors in calculated results

RCRA Metals - MS

Sample ID: MA26019-028MS
Batch: 51805
Analytical Method: 7470A

Matrix: Aqueous
Prep Method: 7470A
Prep Date: 02/01/2011 1020

Parameter	Sample Amount (mg/L)	Spike Amount (mg/L)	Result (mg/L)	Q	Dil	% Rec	% Rec Limit	Analysis Date
Mercury	ND	0.0020	0.0019		1	93	85-115	02/01/2011 1509

PQL = Practical quantitation limit
ND = Not detected at or above the MDL
P = The RPD between two GC columns exceeds 40%
J = Estimated result < PQL and ≥ MDL
N - Recovery is out of criteria
+ - RPD is out of criteria

Where applicable, all soil sample analysis are reported on a dry weight basis unless flagged with a "W"

Note: Calculations are performed before rounding to avoid round-off errors in calculated results

Dissolved RCRA Metals - MB

Sample ID: MQ51805-001
Batch: 51805
Analytical Method: 7470A

Matrix: Aqueous
Prep Method: 7470A
Prep Date: 02/01/2011 1020

Parameter	Result	Q	Dil	PQL	MDL	Units	Analysis Date
Dissolved Mercury	ND		1	0.00010	0.000053	mg/L	02/01/2011 1430

PQL = Practical quantitation limit
ND = Not detected at or above the MDL
P = The RPD between two GC columns exceeds 40%
J = Estimated result < PQL and ≥ MDL
N - Recovery is out of criteria
+ - RPD is out of criteria

Where applicable, all soil sample analysis are reported on a dry weight basis unless flagged with a "W"

Note: Calculations are performed before rounding to avoid round-off errors in calculated results

Dissolved RCRA Metals - LCS

Sample ID: MQ51805-002
Batch: 51805
Analytical Method: 7470A

Matrix: Aqueous
Prep Method: 7470A
Prep Date: 02/01/2011 1020

Parameter	Spike Amount (mg/L)	Result (mg/L)	Q	Dil	% Rec	% Rec Limit	Analysis Date
Dissolved Mercury	0.0020	0.0019		1	95	85-115	02/01/2011 1433

PQL = Practical quantitation limit
ND = Not detected at or above the MDL
P = The RPD between two GC columns exceeds 40%
J = Estimated result < PQL and ≥ MDL
N - Recovery is out of criteria
+ - RPD is out of criteria

Where applicable, all soil sample analysis are reported on a dry weight basis unless flagged with a "W"

Note: Calculations are performed before rounding to avoid round-off errors in calculated results

Dissolved RCRA Metals - LCSD

Sample ID: MQ51805-003
Batch: 51805
Analytical Method: 7470A

Matrix: Aqueous
Prep Method: 7470A
Prep Date: 02/01/2011 1020

Parameter	Spike Amount (mg/L)	Result (mg/L)	Q	Dil	% Rec	% RPD	% Rec Limit	% RPD Limit	Analysis Date
Dissolved Mercury	0.0020	0.0019		1	97	2.1	85-115	20	02/01/2011 1440

PQL = Practical quantitation limit
ND = Not detected at or above the MDL
P = The RPD between two GC columns exceeds 40%
J = Estimated result < PQL and ≥ MDL
N - Recovery is out of criteria
+ - RPD is out of criteria

Where applicable, all soil sample analysis are reported on a dry weight basis unless flagged with a "W"

Note: Calculations are performed before rounding to avoid round-off errors in calculated results

RCRA Metals - MB

Sample ID: MQ51806-001
Batch: 51806
Analytical Method: 7470A

Matrix: Aqueous
Prep Method: 7470A
Prep Date: 02/01/2011 1020

Parameter	Result	Q	Dil	PQL	MDL	Units	Analysis Date
Mercury	ND		1	0.00010	0.000053	mg/L	02/01/2011 1551

PQL = Practical quantitation limit
ND = Not detected at or above the MDL
P = The RPD between two GC columns exceeds 40%
J = Estimated result < PQL and ≥ MDL
N - Recovery is out of criteria
+ - RPD is out of criteria

Where applicable, all soil sample analysis are reported on a dry weight basis unless flagged with a "W"

Note: Calculations are performed before rounding to avoid round-off errors in calculated results

RCRA Metals - LCS

Sample ID: MQ51806-002
Batch: 51806
Analytical Method: 7470A

Matrix: Aqueous
Prep Method: 7470A
Prep Date: 02/01/2011 1020

Parameter	Spike Amount (mg/L)	Result (mg/L)	Q	Dil	% Rec	% Rec Limit	Analysis Date
Mercury	0.0020	0.0018		1	92	85-115	02/01/2011 1554

PQL = Practical quantitation limit
ND = Not detected at or above the MDL
P = The RPD between two GC columns exceeds 40%
J = Estimated result < PQL and ≥ MDL
N - Recovery is out of criteria
+ - RPD is out of criteria

Where applicable, all soil sample analysis are reported on a dry weight basis unless flagged with a "W"

Note: Calculations are performed before rounding to avoid round-off errors in calculated results

RCRA Metals - LCSD

Sample ID: MQ51806-003
Batch: 51806
Analytical Method: 7470A

Matrix: Aqueous
Prep Method: 7470A
Prep Date: 02/01/2011 1020

Parameter	Spike Amount (mg/L)	Result (mg/L)	Q	Dil	% Rec	% RPD	% Rec Limit	% RPD Limit	Analysis Date
Mercury	0.0020	0.0019		1	95	3.2	85-115	20	02/01/2011 1556

PQL = Practical quantitation limit
ND = Not detected at or above the MDL
P = The RPD between two GC columns exceeds 40%
J = Estimated result < PQL and ≥ MDL
N - Recovery is out of criteria
+ - RPD is out of criteria

Where applicable, all soil sample analysis are reported on a dry weight basis unless flagged with a "W"

Note: Calculations are performed before rounding to avoid round-off errors in calculated results

RCRA Metals - MS

Sample ID: MA26019-037MS
Batch: 51806
Analytical Method: 7470A

Matrix: Aqueous
Prep Method: 7470A
Prep Date: 02/01/2011 1020

Parameter	Sample Amount (mg/L)	Spike Amount (mg/L)	Result (mg/L)	Q	Dil	% Rec	% Rec Limit	Analysis Date
Mercury	0.000057	0.0020	0.0019		1	91	85-115	02/01/2011 1622

PQL = Practical quantitation limit
ND = Not detected at or above the MDL
P = The RPD between two GC columns exceeds 40%
J = Estimated result < PQL and ≥ MDL
N - Recovery is out of criteria
+ - RPD is out of criteria

Where applicable, all soil sample analysis are reported on a dry weight basis unless flagged with a "W"

Note: Calculations are performed before rounding to avoid round-off errors in calculated results

Dissolved RCRA Metals - MB

Sample ID: MQ51806-001
Batch: 51806
Analytical Method: 7470A

Matrix: Aqueous
Prep Method: 7470A
Prep Date: 02/01/2011 1020

Parameter	Result	Q	Dil	PQL	MDL	Units	Analysis Date
Dissolved Mercury	ND		1	0.00010	0.000053	mg/L	02/01/2011 1551

PQL = Practical quantitation limit
ND = Not detected at or above the MDL
P = The RPD between two GC columns exceeds 40%
J = Estimated result < PQL and ≥ MDL
N - Recovery is out of criteria
+ - RPD is out of criteria

Where applicable, all soil sample analysis are reported on a dry weight basis unless flagged with a "W"

Note: Calculations are performed before rounding to avoid round-off errors in calculated results

Dissolved RCRA Metals - LCS

Sample ID: MQ51806-002
Batch: 51806
Analytical Method: 7470A

Matrix: Aqueous
Prep Method: 7470A
Prep Date: 02/01/2011 1020

Parameter	Spike Amount (mg/L)	Result (mg/L)	Q	Dil	% Rec	% Rec Limit	Analysis Date
Dissolved Mercury	0.0020	0.0018		1	92	85-115	02/01/2011 1554

PQL = Practical quantitation limit
ND = Not detected at or above the MDL
P = The RPD between two GC columns exceeds 40%
J = Estimated result < PQL and ≥ MDL
N - Recovery is out of criteria
+ - RPD is out of criteria

Where applicable, all soil sample analysis are reported on a dry weight basis unless flagged with a "W"

Note: Calculations are performed before rounding to avoid round-off errors in calculated results

Dissolved RCRA Metals - LCSD

Sample ID: MQ51806-003
Batch: 51806
Analytical Method: 7470A

Matrix: Aqueous
Prep Method: 7470A
Prep Date: 02/01/2011 1020

Parameter	Spike Amount (mg/L)	Result (mg/L)	Q	Dil	% Rec	% RPD	% Rec Limit	% RPD Limit	Analysis Date
Dissolved Mercury	0.0020	0.0019		1	95	3.2	85-115	20	02/01/2011 1556

PQL = Practical quantitation limit
ND = Not detected at or above the MDL
P = The RPD between two GC columns exceeds 40%
J = Estimated result < PQL and ≥ MDL
N - Recovery is out of criteria
+ - RPD is out of criteria

Where applicable, all soil sample analysis are reported on a dry weight basis unless flagged with a "W"

Note: Calculations are performed before rounding to avoid round-off errors in calculated results

Dissolved RCRA Metals - MS

Sample ID: MA26019-035MS
Batch: 51806
Analytical Method: 7470A

Matrix: Aqueous
Prep Method: 7470A
Prep Date: 02/01/2011 1020

Parameter	Sample Amount (mg/L)	Spike Amount (mg/L)	Result (mg/L)	Q	Dil	% Rec	% Rec Limit	Analysis Date
Dissolved Mercury	ND	0.0020	0.0019		1	96	85-115	02/01/2011 1602

PQL = Practical quantitation limit
ND = Not detected at or above the MDL
P = The RPD between two GC columns exceeds 40%
J = Estimated result < PQL and ≥ MDL
N - Recovery is out of criteria
+ - RPD is out of criteria

Where applicable, all soil sample analysis are reported on a dry weight basis unless flagged with a "W"

Note: Calculations are performed before rounding to avoid round-off errors in calculated results

Dissolved RCRA Metals - MSD

Sample ID: MA26019-035MD
Batch: 51806
Analytical Method: 7470A

Matrix: Aqueous
Prep Method: 7470A
Prep Date: 02/01/2011 1020

Parameter	Sample Amount (mg/L)	Spike Amount (mg/L)	Result (mg/L)	Q	Dil	% Rec	% RPD	% Rec Limit	% RPD Limit	Analysis Date
Dissolved Mercury	ND	0.0020	0.0019		1	94	2.1	85-115	20	02/01/2011 1609

PQL = Practical quantitation limit
ND = Not detected at or above the MDL
P = The RPD between two GC columns exceeds 40%
J = Estimated result < PQL and ≥ MDL
N - Recovery is out of criteria
+ - RPD is out of criteria

Where applicable, all soil sample analysis are reported on a dry weight basis unless flagged with a "W"

Note: Calculations are performed before rounding to avoid round-off errors in calculated results

SHEALY ENVIRONMENTAL SERVICES, INC.

Shealy Environmental Services, Inc.
106 Vantage Point Drive
West Columbia, South Carolina 29172
Telephone No. (803) 791-9700 Fax No. (803) 791-9111
www.shealylab.com

SHEALY **Chain of Custody Record** **Number** 01811

Client: ARCADIS	Report to Contact: DAVID.TWAMLEY@ARCADIS-US.COM	Sampler (Printed Name): Cecilia Bell	Quote No.
Address: 2849 PACES FERRY	Telephone No. / Fax No. / Email: 770 431 8666	Waybill No.	Page 1 of 1
City: ATLANTA State: GA Zip Code: 30339	Preservative: 1. Unpres. 2. NaOH/ZnA 3. H2SO4 4. HNO3 5. HCL 6. Na Thio. 7. NaOH		
Project Name: FORT STEWART FST-39			
Project Number: GP09HAFS.F39A. DG0FI	P.O Number		

Sample ID / Description (Containers for each sample may be combined on one line)	Date 2011	Time	G=Grab C=Composite	Matrix: GW	DW	WW	S	Other	Analysis: VOCs 8260	SVOCs 8270	RCRA Metals 6010	Dissolved metals	Remarks / Cooler ID
									Number of Containers: 3	2	1	1	
									Bottle (See Instructions on back): A	I	F	F	
									Preservative: HCL	None	HNO3	None	
									Lot No.: MA26019				
G4MW31 (0125111)	1/25	1020	G	X					X	X	X	X	all dissolved metals to be lab filtered
G4MW32 (0125111)	1/25	1340	G	X					X	X	X	X	
G4MW14 (0125111)	1/25	1430	G	X					X	X	X	X	
Dup02 (0125111)	1/25	0000	G	X					X	X	X	X	

Turn Around Time Required (Prior lab approval required for expedited TAT): X Standard ☐ Rush (Please Specify)

Sample Disposal: ☐ Return to Client ☐ Disposal by Lab

QC Requirements (Specify):

Possible Hazard Identification: ☐Non-Hazard ☐Flammable ☐Skin Irritant ☐Poison ☐Unknown

1. Relinquished by / Sampler: Cecilia Bell	Date: 1/25/11	Time: 1500	1. Received by: J Hanna	Date: 1.25.10	Time: 1600
2. Relinquished by	Date	Time	2. Received by	Date	Time
3. Relinquished by	Date	Time	3. Received by	Date	Time
4. Relinquished by: FedEx	Date: 1/26/11	Time: 0815	4. Laboratory Received by: [illegible]	Date: 1/26/11	Time: 0815

Note: All samples are retained for six weeks from receipt unless other arrangements are made.

LAB USE ONLY
Received on Ice (Check) ☐ Yes ☐ No ☐ Ice Pack
Receipt Temp. 1.6, 1.2 °C
Temp. Blank ☐ Y / ☐ N

Client: Wreadis Cooler Inspected by/date: [illegible] / 1/29/1 Lot #: MA26019

Means of receipt: ☐ SESI ☐ Client ☐ UPS ☑ FedEx ☐ Airborne Exp ☐ Other			
Yes ☑	No ☐	NA ☐	1. Were custody seals present on the cooler?
Yes ☑	No ☐	NA ☐	2. If custody seals were present, were they intact and unbroken?
Cooler ID/temperature upon receipt 1.0 °C 1.7 °C 1.0 °C 1.0 °C / °C / °C / °C / °C			
Method: ☐ Temperature Blank ☑ Against Bottles			
Method of coolant: ☑ Wet Ice ☐ Blue Ice ☐ Dry Ice ☐ None			
If response is No (or Yes for 14, 15, 16), an explanation/resolution must be provided.			
Yes ☐	No ☐	NA ☑	3. If temperature of any cooler exceeded 6.0°C, was Project Manager notified? PM notified by SRC, phone, note (circle one), other:_____. (For coolers received via commercial courier, PMs are to be notified immediately.
Yes ☑	No ☐	NA ☐	4. Is the commercial courier's packing slip attached to this form?
Yes ☐	No ☑	NA ☐	5. Were proper custody procedures (relinquished/received) followed?
Yes ☑	No ☐	NA ☐	6. Were sample IDs listed?
Yes ☑	No ☐	NA ☐	7. Was collection date & time listed?
Yes ☑	No ☐	NA ☐	8. Were tests to be performed listed on the COC or was quote # provided?
Yes ☑	No ☐	NA ☐	9. Did all samples arrive in the proper containers for each test?
Yes ☑	No ☐	NA ☐	10. Did all container label information (ID, date, time) agree with COC?
Yes ☐	No ☑	NA ☐	11. Did all containers arrive in good condition (unbroken, lids on, etc.)?
Yes ☑	No ☐	NA ☐	12. Was adequate sample volume available?
Yes ☐	No ☑	NA ☐	13. Were all samples received within ½ the holding time or 48 hours, whichever comes first?
Yes ☐	No ☑	NA ☐	14. Were any samples containers missing?
Yes ☑	No ☐	NA ☐	15. Were there any excess samples not listed on COC? See Comments
Yes ☐	No ☑	NA ☐	16. Were bubbles present >"pea-size" (¼"or 6mm in diameter) in any VOA vials?
Yes ☑	No ☐	NA ☐	17. Were all metals/O&G/HEM/nutrient samples received at a pH of <2?
Yes ☐	No ☐	NA ☑	18. Were all cyanide and/or sulfide samples received at a pH >12?
Yes ☐	No ☐	NA ☑	19. Were all applicable NH3/TKN/cyanide/phenol/BNA/pest/PCB/herb (<0.2mg/L) and toxicity (<0.1mg/L) samples free of residual chlorine?
Yes ☐	No ☐	NA ☑	20. Were collection temperatures documented on the COC for NC samples?

Sample Preservation (Must be completed for any sample(s) incorrectly preserved or with headspace.)

Sample(s)_____were received incorrectly preserved and were adjusted accordingly in sample receiving with _____(H_2SO_4,HNO_3,HCl,NaOH) with the SR # (number) _____.

Sample(s)_____were received with bubbles >6 mm in diameter.

Sample(s)_____were received with TRC >0.2 mg/L for NH3/TKN/cyanide/BNA/pest/PCB/herb.

Toxicity sample(s)_____were received with TRC >0.1 mg/L and were analyzed by method 330.5.

Corrective Action taken, if necessary:

Was client notified: Yes ☐ No ☐ Did client respond: Yes ☐ No ☐

SESI employee:_____ Date of response:_____

Comments: -040 (G4MW19(D1211) @1355 2 1L Ambers 1 500 dissolved metal 1 500 RCRA metals
3 40mL VOC
-041 (Trip Blank) 2
-033 1 Broken Amber 1L Upon Receipt from FedEx

ARCADIS

Laboratory Task Order No./P.O. No. _____

CHAIN-OF-CUSTODY RECORD

Page 1 of 1

Project Number/Name GP09HAFS.F39A.DGØFI

Project Location HINESVILLE, GA

Laboratory SHEALY

Project Manager DAVID.TWAMLEY@ARCADIS-US.com ERICA.MADDOX@ARCADIS-US.com

Sampler(s)/Affiliation JOHN HANNA / ARCADIS

MA26019

ANALYSIS / METHOD / SIZE

Sample ID/Location	Matrix	Date/Time Sampled	Lab ID	VOCS SW 8260B 3-40mL (HCL)	SVOCS 8260D 2-1L AMBER (NONE)	RCRA METALS 6010 1-500mL (HNO3)	DISSOLVED METALS * 1-1L AMBER (NONE)	BLANKS		Remarks	Total
G4MW022	L	1.25.11 / 1115		3	2	1	1			*DISSOLVED	7
G4MW026	L	1.25.11 / 1305		3	2	1	1			METALS TO	7
G4MW028	L	1.25.11 / 1410		3	2	1	1			BE LAB FILTERED	7
TEMP BLANK	L	—						1			1
TRIP BLANK	L	—						3			3

Sample Matrix: L = Liquid; S = Solid; A = Air

Total No. of Bottles/Containers 21 #25

Relinquished by: Hanna	Organization: ARCADIS	Date 1/25/11	Time 1615	Seal Intact? Yes No N/A
Received by: FEDEX	Organization:	Date / /	Time	
Relinquished by: Fed Ex	Organization:	Date 1/26/11	Time 0815	Seal Intact? Yes No N/A
Received by: [illegible]	Organization: Shealy	Date 1/26/11	Time 0815	

Special Instructions/Remarks: Temp 2.8, 1.2

Delivery Method: ☐ In Person ☒ Common Carrier FEDEX (SPECIFY) ☐ Lab Courier ☐ Other _____ (SPECIFY)

Shealy Environmental Services, Inc.
Document Number: F-AD-016
Revision Number: 6

Page 1 of 1
Replaces Date: 09/22/06
Effective Date: 05/29/07

Sample Receipt Checklist (SRC)

Client: Arcadis Cooler Inspected by/date: [illegible] 11/20/11 Lot #: MA26019

Means of receipt: ☐ SESI ☐ Client ☐ UPS ☑ FedEx ☐ Airborne Exp ☐ Other

Yes ☐	No ☑	NA ☐	1. Were custody seals present on the cooler?
Yes ☐	No ☐	NA ☑	2. If custody seals were present, were they intact and unbroken?

Cooler ID/temperature upon receipt FG °C 1.4 °C 2.8 °C / °C
/ °C / °C / °C / °C

Method: ☑ Temperature Blank ☑ Against Bottles
Method of coolant: ☑ Wet Ice ☐ Blue Ice ☐ Dry Ice ☐ None

If response is No (or Yes for 14, 15, 16), an explanation/resolution must be provided.

Yes ☐	No ☐	NA ☑	3. If temperature of any cooler exceeded 6.0°C, was Project Manager notified? PM notified by SRC, phone, note (circle one), other:_____. (For coolers received via commercial courier, PMs are to be notified immediately.
Yes ☑	No ☐	NA ☐	4. Is the commercial courier's packing slip attached to this form?
Yes ☐	No ☑	NA ☐	5. Were proper custody procedures (relinquished/received) followed?
Yes ☑	No ☐	NA ☐	6. Were sample IDs listed?
Yes ☑	No ☐	NA ☐	7. Was collection date & time listed?
Yes ☑	No ☐	NA ☐	8. Were tests to be performed listed on the COC or was quote # provided?
Yes ☑	No ☐	NA ☐	9. Did all samples arrive in the proper containers for each test?
Yes ☑	No ☐	NA ☐	10. Did all container label information (ID, date, time) agree with COC?
Yes ☑	No ☐	NA ☐	11. Did all containers arrive in good condition (unbroken, lids on, etc.)?
Yes ☑	No ☐	NA ☐	12. Was adequate sample volume available?
Yes ☑	No ☐	NA ☐	13. Were all samples received within ½ the holding time or 48 hours, whichever comes first?
Yes ☑	No ☐	NA ☐	14. Were any samples containers missing? See Comments
Yes ☐	No ☑	NA ☐	15. Were there any excess samples not listed on COC?
Yes ☐	No ☑	NA ☐	16. Were bubbles present >"pea-size" (¼"or 6mm in diameter) in any VOA vials?
Yes ☑	No ☐	NA ☐	17. Were all metals/O&G/HEM/nutrient samples received at a pH of <2?
Yes ☐	No ☐	NA ☑	18. Were all cyanide and/or sulfide samples received at a pH >12?
Yes ☐	No ☐	NA ☑	19. Were all applicable NH3/TKN/cyanide/phenol/BNA/pest/PCB/herb (<0.2mg/L) and toxicity (<0.1mg/L) samples free of residual chlorine?
Yes ☐	No ☐	NA ☑	20. Were collection temperatures documented on the COC for NC samples?

Sample Preservation (Must be completed for any sample(s) incorrectly preserved or with headspace.)

Sample(s)_____ were received incorrectly preserved and were adjusted accordingly in sample receiving with _____ (H_2SO_4,HNO_3,HCl,NaOH) with the SR # (number) _____.

Sample(s)_____ were received with bubbles >6 mm in diameter.

Sample(s)_____ were received with TRC >0.2 mg/L for NH3/TKN/cyanide/BNA/pest/PCB/herb.

Toxicity sample(s)_____ were received with TRC >0.1 mg/L and were analyzed by method 330.5.

Corrective Action taken, if necessary:

Was client notified: Yes ☐ No ☐ Did client respond: Yes ☐ No ☐

SESI employee:_____ Date of response: _____

Comments: -001 was recieved without Dissolved metals bottle (1L Amber GMP) -008 only had 2 TRIPBLANK NOT 3 as listed on COC

ARCADIS

Laboratory Task Order No./P.O. No. _____

CHAIN-OF-CUSTODY RECORD

Page 1 of 1

MA2U019

Project Number/Name GP09HAFS.F39A.DG0EI

Project Location HINESVILLE, GA

Laboratory SHEALY

Project Manager DAVID.TWAMLEY@ARCADIS-US.COM ERICA.MADDOX@ARCADIS-US.COM

Sampler(s)/Affiliation JOHN HANNA/ARCADIS

ANALYSIS / METHOD / SIZE

Sample ID/Location	Matrix	Date/Time Sampled	Lab ID	VOCS (SW8260B) 3-40mL VIALS (HCL)	SVOCS (8260D) 2-1L AMBER	RCRA METALS (6010) 1-500mL PLASTIC (HNO3)	METALS/DIS METALS 1-500mL (HNO3) / 1-500mL (NONE)	ALKA/NO2,NO3,CL SO4 1-500mL PLASTIC (NONE)	TOC/DISS GASSES 1-250mL (SULFURIC) / 2-40mL VIALS (BAS)	Remarks	Total
G4MW016	L	1.26.11/830		3	2	1	1/1	1	1/2		12
G4DUP-01	L	1.26.11/—		3	2	1	1/1	1	1/2		12
G4MW042	L	1.26.11/1240		3	2	1	1/1	1	1/2		12
G4MW047	L	1.26.11/1435		3	2	1	1/1	1	1/2		12
G4MW038	L	1.26.11/1431		3	2	1	1/1	1	1/2		12
TRIP BLANK	L	—									3
TEMPBLANK	L	—									1
										Total No. of Bottles/Containers	64

Sample Matrix: L = Liquid; S = Solid; A = Air

Relinquished by: John V. Hanna	Organization: ARCADIS	Date 1/26/11	Time 1530	Seal Intact? Yes No N/A
Received by:	Organization:	Date / /	Time	
Relinquished by: Colvin	Organization: FEDEX	Date 1/27/11	Time 0835	Seal Intact? Yes No N/A
Received by: ~~FEDEX~~ GCamm	Organization: Shealy Env	Date 1/27/11	Time 0835	

Special Instructions/Remarks: GW 1/27/11

T= 1.9, 2.4

Delivery Method: ☐ In Person ☒ Common Carrier FEDEX (SPECIFY) ☐ Lab Courier ☐ Other _____ (SPECIFY)

AG 05 12/01

Shealy Environmental Services, Inc.
Document Number: F-AD-016
Revision Number: 6

Page 1 of 1
Replaces Date: 09/22/06
Effective Date: 05/29/07

Sample Receipt Checklist (SRC)

Client: Arcadis Cooler Inspected by/date: [illegible] 1/27/11 Lot #: MA26019

Means of receipt: ☐ SESI ☐ Client ☐ UPS ☑ FedEx ☐ Airborne Exp ☐ Other

Yes ☑	No ☐	NA ☐	1. Were custody seals present on the cooler?
Yes ☑	No ☐	NA ☐	2. If custody seals were present, were they intact and unbroken?

Cooler ID/temperature upon receipt 1.9 °C ___/___ °C ___/___ °C ___/___ °C
2.4 °C ___/___ °C ___/___ °C ___/___ °C

Method: ☐ Temperature Blank ☑ Against Bottles
Method of coolant: ☑ Wet Ice ☐ Blue Ice ☐ Dry Ice ☐ None

If response is No (or Yes for 14, 15, 16), an explanation/resolution must be provided.

Yes ☐	No ☐	NA ☑	3. If temperature of any cooler exceeded 6.0°C, was Project Manager notified? PM notified by SRC, phone, note (circle one), other:_____. (For coolers received via commercial courier, PMs are to be notified immediately.
Yes ☑	No ☐	NA ☐	4. Is the commercial courier's packing slip attached to this form?
Yes ☐	No ☑	NA ☐	5. Were proper custody procedures (relinquished/received) followed?
Yes ☑	No ☐	NA ☐	6. Were sample IDs listed?
Yes ☑	No ☐	NA ☐	7. Was collection date & time listed?
Yes ☑	No ☐	NA ☐	8. Were tests to be performed listed on the COC or was quote # provided?
Yes ☑	No ☐	NA ☐	9. Did all samples arrive in the proper containers for each test?
Yes ☑	No ☐	NA ☐	10. Did all container label information (ID, date, time) agree with COC?
Yes ☑	No ☐	NA ☐	11. Did all containers arrive in good condition (unbroken, lids on, etc.)?
Yes ☑	No ☐	NA ☐	12. Was adequate sample volume available?
Yes ☑	No ☐	NA ☐	13. Were all samples received within ½ the holding time or 48 hours, whichever comes first?
Yes ☐	No ☑	NA ☐	14. Were any samples containers missing?
Yes ☐	No ☑	NA ☐	15. Were there any excess samples not listed on COC?

[redacted]

ARCADIS

Laboratory Task Order No./P.O. No. _____

CHAIN-OF-CUSTODY RECORD

Page 1

Project Number/Name GA09HAFS.F39A.DG0FI

Project Location HINESVILLE, GA

Laboratory SHEALY

Project Manager DAVID.TWAMLEY@ARCADIS-US.COM ERICA.MADDOX@ARCADIS-US.COM

Sampler(s)/Affiliation JOHN HANNA/ARCADIS

ANALYSIS / METHOD / SIZE

Sample ID/Location	Matrix	Date/Time Sampled	Lab ID	VOCs (SW8260B) 3-40mL VIALS	SVOCs (8260D) 2-1L AMBER (HCL)	RCRA METALS (6010) 1-500mL PLASTIC (NONE)	DISSOLVED METALS 1-500mL PLASTIC (HNO3)	ALKA, NO2, NO3, Cl, SO4 1-500mL PLASTIC (HNO3)	TOC / DIS. GASSES 1-250mL / 2-40mL VIALS (NONE) (Sulfuric Acid) / (BAK)	PH / REACTIVITY 1-500mL (NONE)	Remarks
G4MW023	L	1.27.11 0915		9	6	3	3				MS/MSD
G4MW044	L	1.26.11 1630		3	2	1	1				
G4MW045	L	1.26.11 1715		3	2	1	1				
G4MW034	L	1.26.11 1815		3	2	1	1				
G4MW035	L	1.26.11 1905		3	2	1	1				
G4MW017	L	1.26.11 2005		3	2	1	1				
G4MW043	L	1.27.11 1040		9	6	3	3				MS/MSD
G4MW037	L	1.27.11 1210		3	2	1	1				
G4MW027	L	1.27.11 1310		3	2	1	1				
G4MW046	L	1.27.11 1610		3	2	1	1				
TRIP BLANK	L	—		3							
TEMP BLANK	L	—		1							
G4MW040	L	1.28.11 0845		3	2	1	1 *	1	1/2		* PLEASE LAB FILT. DISS METALS
IDW F39GW01	L	1.28.11 1030		3	2	1					1
IDW F39GW02	L	1.28.11 1045		3	2	1					1

Sample Matrix: L = Liquid; S = Solid; A = Air

Total No. of Bottles/Containers 9

Relinquished by: John V. Hanna	Organization: ARCADIS	Date 1/28/2011	Time	Seal I
Received by:	Organization:	Date / /	Time	Yes N
Relinquished by: FEDEX	Organization:	Date 1/29/11	Time 0910	Seal I
Received by:	Organization: Shealy	Date 1/29/11	Time 0910	Yes N

Special Instructions/Remarks:

Temp = 5.6, 5.5, 4.3, 4.4, 5.6

Delivery Method: ☐ In Person ☒ Common Carrier FedEx (SPECIFY) ☐ Lab Courier ☐ Other _____ (SPECIFY)

Document Number: F-AD-016
Revision Number: 6

Replaces Date: 09/22/06
Effective Date: 05/29/07

Sample Receipt Checklist (SRC)

Client: Arcadis Cooler Inspected by/date: [illegible] 11/29/11 Lot #: MA2609

Means of receipt: ☐ SESI ☐ Client ☐ UPS ☑ FedEx ☐ Airborne Exp ☐ Other

Yes ☑	No ☐	NA ☐	1. Were custody seals present on the cooler?
Yes ☑	No ☐	NA ☐	2. If custody seals were present, were they intact and unbroken?

Cooler ID/temperature upon receipt 5.6 °C 5.8 °C 4.3 °C 4.4 °C
3.4 °C / °C / °C / °C

Method: ☑ Temperature Blank ☐ Against Bottles
Method of coolant: ☑ Wet Ice ☐ Blue Ice ☐ Dry Ice ☐ None

If response is No (or Yes for 14, 15, 16), an explanation/resolution must be provided.

Yes ☐	No ☐	NA ☑	3. If temperature of any cooler exceeded 6.0°C, was Project Manager notified? PM notified by SRC, phone, note (circle one), other:_____. (For coolers received via commercial courier, PMs are to be notified immediately.
Yes ☑	No ☐	NA ☐	4. Is the commercial courier's packing slip attached to this form?
Yes ☑	No ☐	NA ☐	5. Were proper custody procedures (relinquished/received) followed?
Yes ☑	No ☐	NA ☐	6. Were sample IDs listed?
Yes ☑	No ☐	NA ☐	7. Was collection date & time listed?
Yes ☑	No ☐	NA ☐	8. Were tests to be performed listed on the COC or was quote # provided?
Yes ☑	No ☐	NA ☐	9. Did all samples arrive in the proper containers for each test?
Yes ☑	No ☐	NA ☐	10. Did all container label information (ID, date, time) agree with COC?
Yes ☐	No ☑	NA ☐	11. Did all containers arrive in good condition (unbroken, lids on, etc.)? See Comments
Yes ☑	No ☐	NA ☐	12. Was adequate sample volume available? –
Yes ☑	No ☐	NA ☐	13. Were all samples received within ½ the holding time or 48 hours, whichever comes first?
Yes ☐	No ☑	NA ☐	14. Were any samples containers missing?
Yes ☐	No ☑	NA ☐	15. Were there any excess samples not listed on COC?
Yes ☐	No ☑	NA ☐	16. Were bubbles present >"pea-size" (¼"or 6mm in diameter) in any VOA vials?
Yes ☑	No ☐	NA ☐	17. Were all metals/O&G/HEM/nutrient samples received at a pH of <2?
Yes ☐	No ☐	NA ☑	18. Were all cyanide and/or sulfide samples received at a pH >12?
Yes ☐	No ☐	NA ☑	19. Were all applicable NH3/TKN/cyanide/phenol/BNA/pest/PCB/herb (<0.2mg/L) and toxicity (<0.1mg/L) samples free of residual chlorine?
Yes ☐	No ☐	NA ☑	20. Were collection temperatures documented on the COC for NC samples?

Sample Preservation (Must be completed for any sample(s) incorrectly preserved or with headspace.)

Sample(s)_____ were received incorrectly preserved and were adjusted accordingly in sample receiving with _____ (H_2SO_4,HNO_3,HCl,NaOH) with the SR # (number) _____.

Sample(s)_____ were received with bubbles >6 mm in diameter.

Sample(s)_____ were received with TRC >0.2 mg/L for NH3/TKN/cyanide/BNA/pest/PCB/herb.

Toxicity sample(s)_____ were received with TRC >0.1 mg/L and were analyzed by method 330.5.

Corrective Action taken, if necessary:

Was client notified: Yes ☐ No ☐ Did client respond: Yes ☐ No ☐

SESI employee:_____ Date of response:_____

Comments: -017, -018, -020 Had 1 Broken Amber 1L upon receipt by Fed Ex

SHEALY

Chain of Custody Record

Shealy Environmental Services, Inc.
106 Vantage Point Drive
West Columbia, South Carolina 29172
Telephone No. (803) 791-9700 Fax No. (803) 791-9111
www.shealylab.com

Number 02136

Client: Arcadis	Report to Contact: Shelly Gibbons	Sampler (Printed Name): Cecilia Bell / Sheryl Schmid	Quote No.
Address: 2849 Paces Ferry Rd	Telephone No. / Fax No. / Email: 919 854 9807 shelley.gibbons@arcadis-us.com	Waybill No.	Page 1 of 2
City: Atlanta; State: GA; Zip Code: 30339	Preservative: 1. Unpres. 2. NaOH/ZnA 3. H2SO4 4. HNO3 5. HCL 6. Na Thio. 7. NaOH		
Project Name: FST39			
Project Number: GP09 HAFS.F39A	P.O Number		

Sample ID / Description (Containers for each sample may be combined on one line)	Date	Time	G=Grab C=Composite	Matrix: GW	DW	WW	S	Other	Analysis: VOCs	SVOCs	RCRA Metals	Dissolved Metals	Lot No. / Remarks / Cooler ID
Number of Containers									3	2	1	1	
Bottle (See Instructions on back)									A	1	F	F	
Preservative									5	1	4	4	
Lot No.													MA 26019
G4 MW18 (012611)	1-26-11	1625	G	X					X	X	X	X	
G4 MW30 (012611)	1-26-11	1815	G	X					X	X	X	X	
GW MW39 (012611)	1-26-11	2030	G	X					X	X	X	X	
G4 MW20 (012711)	1-27-11	750	G	X					X	X	X	X	
G4 MW33 (012711)	1-27-11	830	G	X					X	X	X	X	
G4 MW11 (012711)	1-27-11	945	G	X					X	X	X	X	
G4 MW25 (012711)	1-27-11	1000	G	X					X	X	X	X	
G4 MW10 (012711)	1-27-11	1053	G	X					X	X	X	X	
G4 MW24 (012711)	1-27-11	1110	G	X					X	X	X	X	
G4 MW13 (012711)	1-27-11	1245	G	X					X	X	X	X	

Turn Around Time Required (Prior lab approval required for expedited TAT): ☐ Standard ☐ Rush (Please Specify)

Sample Disposal: ☐ Return to Client ☐ Disposal by Lab

QC Requirements (Specify):

Possible Hazard Identification: ☐Non-Hazard ☐Flammable ☐Skin Irritant ☐Poison ☐Unknown

	Date	Time		Date	Time
1. Relinquished by / Sampler: Cecilia Bell	1-28-11	1800	1. Received by		
2. Relinquished by			2. Received by		
3. Relinquished by			3. Received by		
4. Relinquished by: FedEx	1/29/11	0910	4. Laboratory Received by	1/29/11	0910

Note: All samples are retained for six weeks from receipt unless other arrangements are made.

LAB USE ONLY
Received on Ice (Check): ☐ Yes ☐ No ☐ Ice Pack
Receipt Temp. 1.0, 1.7, 1.0, 1.0 °C
Temp. Blank ☐ Y / ☐ N

SHEALY ENVIRONMENTAL SERVICES, INC.

Shealy Environmental Services, Inc.
106 Vantage Point Drive
West Columbia, South Carolina 29172
Telephone No. (803) 791-9700 Fax No. (803) 791-9111
www.shealylab.com

SHEALY

Chain of Custody Record

Number 02137

Client: Arcadis	Report to Contact: Shelley Gibbons	Sampler (Printed Name): Cecilia Bell / Sheryl Schmid	Quote No.
Address: 2849 Paces Ferry Rd	Telephone No. / Fax No. / Email: 919 8549807 / shelley.gibbons@arcadis-us.com	Waybill No.	Page 2 of 2
City: Atlanta; State: GA; Zip Code: 30339	Preservative: 1. Unpres. 2. NaOH/ZnA 3. H2SO4 4. HNO3 5. HCL 6. Na Thio. 7. NaOH		
Project Name: FST39			
Project Number: GP09HAFS, F39A, DG0F1	P.O Number		

Sample ID / Description (Containers for each sample may be combined on one line)	Date	Time	G=Grab C=Composite	GW	DW	WW	S	Other	Analysis	8260 VOCs	8270 SVOCs	6010 RCRA Metals	Dissolved Metals	Number of Containers	Bottle (See Instructions on back)	Preservative	Lot No.	Remarks / Cooler ID
										A	1	F	F					
										3	2	1	1					
										5	1	4	4					
G4MW29 (012711)	1-27-11	1535	G	X						X	X	X	X				NA 26019	
G4MW 36 (012711)	1-27-11	1830	G	X						X	X	X	X					
G4MW 41 (012711)	1-27-11	1945	G	X						X	X	X	X					

Turn Around Time Required (Prior lab approval required for expedited TAT): ☐ Standard ☐ Rush (Please Specify)

Sample Disposal: ☐ Return to Client ☐ Disposal by Lab

QC Requirements (Specify):

Possible Hazard Identification: ☐Non-Hazard ☐Flammable ☐Skin Irritant ☐Poison ☐Unknown

1. Relinquished by / Sampler: Cec Bell	Date: 1-28-11	Time: 1800	1. Received by	Date	Time
2. Relinquished by	Date	Time	2. Received by	Date	Time
3. Relinquished by	Date	Time	3. Received by	Date	Time
4. Relinquished by: Fed Ex	Date: 1/29/11	Time: 0900	4. Laboratory Received by	Date: 1/29/11	Time: 0910

Note: All samples are retained for six weeks from receipt unless other arrangements are made.

LAB USE ONLY
Received on Ice (Check) ☑ Yes ☐ No ☐ Ice Pack
Receipt Temp. 1.0, 1.7, 1.0, 1.0 °C
Temp. Blank ☐ Y / ☑ N

microseeps
From insight comes solutions

Client Name: Shealy Environmental
Contact: Nisreen Saikaly
Address: 106 Vantage Point Drive
West Columbia, SC 29172

Lab Proj #: P1101326
Report Date: 02/11/11
Client Proj Name: MA26019
Client Proj #: MA26019

Laboratory Results

Total pages in data package: 9

Lab Sample #	Client Sample ID
P1101326-01	G4MW016
P1101326-02	G4DUP-01
P1101326-03	G4MW042
P1101326-04	GWMW047
P1101326-05	G4MW038

Microseeps test results meet all the requirements of the NELAC standards or provide reasons and/or justification if they do not.

Approved By: Debbie Hallo ***Date:*** 2-14-11

Project Manager: Debbie Hallo

The analytical results reported here are reliable and usable to the precision expressed in this report. As required by some regulating authorities, a full discussion of the uncertainty in our analytical results can be obtained at our web site or through customer service. Unless otherwise specified, all results are reported on a wet weight basis.

As a valued client we would appreciate your comments on our service.
Please call customer service at (412)826-5245 or email customerservice@microseeps.com.

Case Narrative:

Client Name: Shealy Environmental
Contact: Nisreen Saikaly
Address: 106 Vantage Point Drive
West Columbia, SC 29172

Lab Proj #: P1101326
Report Date: 02/11/11
Client Proj Name: MA26019
Client Proj #: MA26019

Sample Description	Matrix	Lab Sample #	Sampled Date/Time	Received
G4MW016	Water	P1101326-01	26 Jan. 11 10:30	28 Jan. 11 14:17

Analyte(s)	Flag	Result	PQL	Units	Method #	Analysis Date	By
RiskAnalysis							
N Ethane		0.350	0.025	ug/L	AM20GAX	2/8/11	rw
N Ethene		0.048	0.025	ug/L	AM20GAX	2/8/11	rw
N Methane		230.000	0.100	ug/L	AM20GAX	2/8/11	rw

PA02-00538

Data Qualifiers: J - estimated value, U - Non detect, R - Poor surrogate recovery, M - Recovery/RPD poor for MS/MSD, SAMP/DUP, B - detected in blank, S - field sample as received did not meet NELAC sample acceptance criteria, L - Subcontracted Lab used, N - NELAC certified analysis

Client Name: Shealy Environmental
Contact: Nisreen Saikaly
Address: 106 Vantage Point Drive
West Columbia, SC 29172

Lab Proj #: P1101326
Report Date: 02/11/11
Client Proj Name: MA26019
Client Proj #: MA26019

Sample Description	Matrix	Lab Sample #	Sampled Date/Time	Received
G4DUP-01	Water	P1101326-02	26 Jan. 11 0:00	28 Jan. 11 14:17

Analyte(s)	Flag	Result	PQL	Units	Method #	Analysis Date	By
RiskAnalysis							
N Ethane		0.350	0.025	ug/L	AM20GAX	2/9/11	rw
N Ethene		0.120	0.025	ug/L	AM20GAX	2/9/11	rw
N Methane		230.000	0.100	ug/L	AM20GAX	2/9/11	rw

PA02-00538

Data Qualifiers: J - estimated value, U - Non detect, R - Poor surrogate recovery, M - Recovery/RPD poor for MS/MSD, SAMP/DUP, B - detected in blank, S - field sample as received did not meet NELAC sample acceptance criteria, L - Subcontracted Lab used, N - NELAC certified analysis

Client Name: Shealy Environmental
Contact: Nisreen Saikaly
Address: 106 Vantage Point Drive
West Columbia, SC 29172

Lab Proj #: P1101326
Report Date: 02/11/11
Client Proj Name: MA26019
Client Proj #: MA26019

Sample Description	Matrix	Lab Sample #	Sampled Date/Time	Received
G4MW042	Water	P1101326-03	26 Jan. 11 12:40	28 Jan. 11 14:17

Analyte(s)	Flag	Result	PQL	Units	Method #	Analysis Date	By
RiskAnalysis							
N Ethane		0.096	0.025	ug/L	AM20GAX	2/9/11	rw
N Ethene		0.190	0.025	ug/L	AM20GAX	2/9/11	rw
N Methane		1900.000	0.100	ug/L	AM20GAX	2/9/11	rw

PA02-00538

Data Qualifiers: J - estimated value, U - Non detect, R - Poor surrogate recovery, M - Recovery/RPD poor for MS/MSD, SAMP/DUP, B - detected in blank, S - field sample as received did not meet NELAC sample acceptance criteria, L - Subcontracted Lab used, N - NELAC certified analysis

Client Name: Shealy Environmental
Contact: Nisreen Saikaly
Address: 106 Vantage Point Drive
West Columbia, SC 29172

Lab Proj #: P1101326
Report Date: 02/11/11
Client Proj Name: MA26019
Client Proj #: MA26019

Sample Description	Matrix	Lab Sample #	Sampled Date/Time	Received
GWMW047	Water	P1101326-04	26 Jan. 11 14:35	28 Jan. 11 14:17

Analyte(s)	Flag	Result	PQL	Units	Method #	Analysis Date	By
RiskAnalysis							
N Ethane		1.300	0.025	ug/L	AM20GAX	2/9/11	rw
N Ethene		0.770	0.025	ug/L	AM20GAX	2/9/11	rw
N Methane		160.000	0.100	ug/L	AM20GAX	2/9/11	rw

PA02-00538

Data Qualifiers: J - estimated value, U - Non detect, R - Poor surrogate recovery, M - Recovery/RPD poor for MS/MSD, SAMP/DUP, B - detected in blank, S - field sample as received did not meet NELAC sample acceptance criteria, L - Subcontracted Lab used, N - NELAC certified analysis

Client Name: Shealy Environmental
Contact: Nisreen Saikaly
Address: 106 Vantage Point Drive
West Columbia, SC 29172

Lab Proj #: P1101326
Report Date: 02/11/11
Client Proj Name: MA26019
Client Proj #: MA26019

Sample Description	Matrix	Lab Sample #	Sampled Date/Time	Received
G4MW038	Water	P1101326-05	26 Jan. 11 14:31	28 Jan. 11 14:17

Analyte(s)	Flag	Result	PQL	Units	Method #	Analysis Date	By
RiskAnalysis							
N Ethane		1.400	0.025	ug/L	AM20GAX	2/9/11	rw
N Ethene		0.190	0.025	ug/L	AM20GAX	2/9/11	rw
N Methane		66.000	0.100	ug/L	AM20GAX	2/9/11	rw

PA02-00538

Data Qualifiers: J - estimated value, U - Non detect, R - Poor surrogate recovery, M - Recovery/RPD poor for MS/MSD, SAMP/DUP, B - detected in blank, S - field sample as received did not meet NELAC sample acceptance criteria, L - Subcontracted Lab used, N - NELAC certified analysis

Client Name: Shealy Environmental
Contact: Nisreen Saikaly
Address: 106 Vantage Point Drive
West Columbia, SC 29172

Lab Proj #: P1101326
Report Date: 02/11/11
Client Proj Name: MA26019
Client Proj #: MA26019

Prep Method: In House Dissolved Gas Sample Preparation
Analysis Method: Light Hydrocarbons (C1-C4) in Water

M110208001-MB

	Result		TrueSpikeConc.	RDL	%Recovery	Ctl Limits
Ethane	< 0.025	ug/L		0.025		- NA
Ethene	< 0.025	ug/L		0.025		- NA
Methane	< 0.100	ug/L		0.100		- NA

M110208001-LCS

	Result		TrueSpikeConc.	%Recovery	Ctl Limits
Ethane	47.000	ug/L	45.00	104.00	80 - 120
Ethene	43.000	ug/L	40.80	105.00	80 - 120
Methane	850.000	ug/L	825.00	103.00	80 - 120

M110208001-LCSD

	Result		TrueSpikeConc.	%Recovery	Ctl Limits	RPD	RPD Ctl Limits
Ethane	49.000	ug/L	45.00	109.00	80 - 120	4.17	0 - 20
Ethene	45.000	ug/L	40.80	110.00	80 - 120	4.55	0 - 20
Methane	880.000	ug/L	825.00	107.00	80 - 120	3.47	0 - 20

Outlined Results indicate results outside of Control limits

Data Qualifiers: J - estimated value, U - Non detect, R - Poor surrogate recovery, M - Recovery/RPD poor for MS/MSD, SAMP/DUP, B - detected in blank, S - field sample as received did not meet NELAC sample acceptance criteria, L - Subcontracted Lab used, N - NELAC certified analysis

PA02-00538

Client Name: Shealy Environmental
Contact: Nisreen Saikaly
Address: 106 Vantage Point Drive
West Columbia, SC 29172

Lab Proj #: P1101326
Report Date: 02/11/11
Client Proj Name: MA26019
Client Proj #: MA26019

Prep Method: In House Dissolved Gas Sample Preparation

Analysis Method: Light Hydrocarbons (C1-C4) in Water

M110209003-MB

	Result		TrueSpikeConc.	RDL	%Recovery	Ctl Limits
Ethane	< 0.025	ug/L		0.025		- NA
Ethene	< 0.025	ug/L		0.025		- NA
Methane	< 0.100	ug/L		0.100		- NA

M110209003-LCS

	Result		TrueSpikeConc.	%Recovery	Ctl Limits
Ethane	47.000	ug/L	45.00	104.00	80 - 120
Ethene	42.000	ug/L	40.80	103.00	80 - 120
Methane	870.000	ug/L	825.00	105.00	80 - 120

M110209003-LCSD

	Result		TrueSpikeConc.	%Recovery	Ctl Limits	RPD	RPD Ctl Limits
Ethane	46.000	ug/L	45.00	102.00	80 - 120	2.15	0 - 20
Ethene	42.000	ug/L	40.80	103.00	80 - 120	0.00	0 - 20
Methane	870.000	ug/L	825.00	105.00	80 - 120	0.00	0 - 20

Outlined Results indicate results outside of Control limits

PA02-00538

Data Qualifiers: J - estimated value, U - Non detect, R - Poor surrogate recovery, M - Recovery/RPD poor for MS/MSD, SAMP/DUP, B - detected in blank, S - field sample as received did not meet NELAC sample acceptance criteria, L - Subcontracted Lab used, N - NELAC certified analysis

P1101326

SHEALY

Chain of Custody Record

Shealy Environmental Services, Inc.
106 Vantage Point Drive
West Columbia, South Carolina 29172
Telephone No. (803) 791-9700 Fax No. (803) 791-9111
www.shealylab.com

To: Microseeps

Number 02499

Client	Report to Contact: Nisram Saikaly	Sampler (Printed Name)	Quote No.
Address	Telephone No. / Fax No. / Email	Waybill No.	Page 1 of 1
City / State / Zip Code	Preservative: 1. Unpres. 2. NaOH/ZnA 3. H2SO4 4. HNO3 5. HCL 6. Na Thio. 7. NaOH		
Project Name			
Project Number	P.O Number		

Sample ID / Description (Containers for each sample may be combined on one line)	Date	Time	G=Grab C=Composite	Matrix: GW	DW	WW	S	Other	Analysis: Diss. Gases (M,E,E)	Number of Containers	Bottle (See Instructions on back)	Preservative	Lot No. MA2W019	Remarks / Cooler ID
										16	B			
1 G4MW016	1/26/11	1030							✓					Nuds EDD
2 G4Dup-01		—							✓					
3 G4MW042		1240							✓					
4 GWMW047		1435							✓					
5 G4MW038		1431							✓					

Turn Around Time Required (Prior lab approval required for expedited TAT)	Sample Disposal	QC Requirements (Specify)	Possible Hazard Identification
☑ Standard ☐ Rush (Please Specify)	☐ Return to Client ☑ Disposal by Lab		☐Non-Hazard ☐Flammable ☐Skin Irritant ☐Poison ☑Unknown

	Date	Time		Date	Time
1. Relinquished by / Sampler	1-27-11	1800	1. Received by FEDEX	1-27-11	1800
2. Relinquished by			2. Received by		
3. Relinquished by			3. Received by	1/28	1000
4. Relinquished by			4. Laboratory Received by		

Note: All samples are retained for six weeks from receipt unless other arrangements are made.

LAB USE ONLY
Received on Ice (Check) ☐ Yes ☐ No ☐ Ice Pack
Receipt Temp. 4 °C
Temp. Blank ☐ Y / ☐ N

Report of Analysis

ARCADIS U.S., Inc.
30 Patewood Drive
Suite 155
Greenville, SC 29615
Attention: Allison Fang

Project Name: FST-39

Project Number: GP08HAFS.F39A.DGOFI

Lot Number: MD28024

Date Completed: 05/05/2011

Nisreen Saikaly
Project Manager

This report shall not be reproduced, except in its entirety, without the written approval of Shealy Environmental Services, Inc.

The following non-paginated documents are considered part of this report: Chain of Custody Record and Sample Receipt Checklist.

* MD 2 8 0 2 4 *

Case Narrative
ARCADIS U.S., Inc.
Lot Number: MD28024

This Report of Analysis contains the analytical result(s) for the sample(s) listed on the Sample Summary following this Case Narrative. The sample receiving date is documented in the header information associated with each sample.

All results listed in this report relate only to the samples that are contained within this report.

Sample receipt, sample analysis, and data review have been performed in accordance with the most current approved NELAC standards, the Shealy Environmental Services, Inc. ("Shealy") Quality Assurance Management Plan (QAMP), standard operating procedures (SOPs), and Shealy policies. Any exceptions to the NELAC standards, the QAMP, SOPs or policies are qualified on the results page or discussed below.

Shealy is not NELAC certified for Phosphorus by 365.1 but is certified in SC and NC.

Shealy is not NELAC certified for VPH, but is certified for VPH in NC.

If you have any questions regarding this report please contact the Shealy Project Manager listed on the cover page.

Sample Summary

ARCADIS U.S., Inc.

Lot Number: MD28024

Sample Number	Sample ID	Matrix	Date Sampled	Date Received
001	G4MW053(0.5-1.0)	Solid	04/27/2011 1020	04/28/2011
002	G4MW053(3.0-3.5)	Solid	04/27/2011 1025	04/28/2011
003	F39-SB-013(0.5-1.0)	Solid	04/27/2011 0945	04/28/2011
004	F39-SB-013(3.0-3.5)	Solid	04/27/2011 1000	04/28/2011
005	F39-SB-014(0.5-1.0)	Solid	04/27/2011 1005	04/28/2011
006	F39-SB-014(3.0-3.5)	Solid	04/27/2011 1010	04/28/2011

(6 samples)

Executive Summary
ARCADIS U.S., Inc.
Lot Number: MD28024

Sample	Sample ID	Matrix	Parameter	Method	Result	Q	Units	Page
003	F39-SB-013(0.5-1.0)	Solid	Acenaphthene	8270D	20	J	ug/kg	9
003	F39-SB-013(0.5-1.0)	Solid	Acenaphthylene	8270D	120		ug/kg	9
003	F39-SB-013(0.5-1.0)	Solid	Anthracene	8270D	71	J	ug/kg	9
003	F39-SB-013(0.5-1.0)	Solid	Benzo(a)anthracene	8270D	250		ug/kg	9
003	F39-SB-013(0.5-1.0)	Solid	Benzo(a)pyrene	8270D	420		ug/kg	9
003	F39-SB-013(0.5-1.0)	Solid	Benzo(b)fluoranthene	8270D	500		ug/kg	9
003	F39-SB-013(0.5-1.0)	Solid	Benzo(g,h,i)perylene	8270D	250		ug/kg	9
003	F39-SB-013(0.5-1.0)	Solid	Benzo(k)fluoranthene	8270D	270		ug/kg	9
003	F39-SB-013(0.5-1.0)	Solid	Chrysene	8270D	310		ug/kg	9
003	F39-SB-013(0.5-1.0)	Solid	Dibenzo(a,h)anthracene	8270D	68	J	ug/kg	9
003	F39-SB-013(0.5-1.0)	Solid	Fluoranthene	8270D	150		ug/kg	9
003	F39-SB-013(0.5-1.0)	Solid	Fluorene	8270D	110		ug/kg	9
003	F39-SB-013(0.5-1.0)	Solid	Indeno(1,2,3-c,d)pyrene	8270D	220		ug/kg	10
003	F39-SB-013(0.5-1.0)	Solid	Phenanthrene	8270D	210		ug/kg	10
003	F39-SB-013(0.5-1.0)	Solid	Pyrene	8270D	350		ug/kg	10
004	F39-SB-013(3.0-3.5)	Solid	Acenaphthylene	8270D	200		ug/kg	11
004	F39-SB-013(3.0-3.5)	Solid	Anthracene	8270D	89		ug/kg	11
004	F39-SB-013(3.0-3.5)	Solid	Benzo(a)anthracene	8270D	430		ug/kg	11
004	F39-SB-013(3.0-3.5)	Solid	Benzo(a)pyrene	8270D	680		ug/kg	11
004	F39-SB-013(3.0-3.5)	Solid	Benzo(b)fluoranthene	8270D	790		ug/kg	11
004	F39-SB-013(3.0-3.5)	Solid	Benzo(g,h,i)perylene	8270D	370		ug/kg	11
004	F39-SB-013(3.0-3.5)	Solid	Benzo(k)fluoranthene	8270D	440		ug/kg	11
004	F39-SB-013(3.0-3.5)	Solid	Chrysene	8270D	570		ug/kg	11
004	F39-SB-013(3.0-3.5)	Solid	Dibenzo(a,h)anthracene	8270D	100		ug/kg	11
004	F39-SB-013(3.0-3.5)	Solid	Fluoranthene	8270D	230		ug/kg	11
004	F39-SB-013(3.0-3.5)	Solid	Fluorene	8270D	11	J	ug/kg	11
004	F39-SB-013(3.0-3.5)	Solid	Indeno(1,2,3-c,d)pyrene	8270D	330		ug/kg	12
004	F39-SB-013(3.0-3.5)	Solid	Pyrene	8270D	610		ug/kg	12
005	F39-SB-014(0.5-1.0)	Solid	Acenaphthylene	8270D	29	J	ug/kg	13
005	F39-SB-014(0.5-1.0)	Solid	Anthracene	8270D	15	J	ug/kg	13
005	F39-SB-014(0.5-1.0)	Solid	Benzo(a)anthracene	8270D	88		ug/kg	13
005	F39-SB-014(0.5-1.0)	Solid	Benzo(a)pyrene	8270D	73		ug/kg	13
005	F39-SB-014(0.5-1.0)	Solid	Benzo(b)fluoranthene	8270D	97		ug/kg	13
005	F39-SB-014(0.5-1.0)	Solid	Benzo(g,h,i)perylene	8270D	41	J	ug/kg	13
005	F39-SB-014(0.5-1.0)	Solid	Benzo(k)fluoranthene	8270D	46	J	ug/kg	13
005	F39-SB-014(0.5-1.0)	Solid	Chrysene	8270D	94		ug/kg	13
005	F39-SB-014(0.5-1.0)	Solid	Dibenzo(a,h)anthracene	8270D	12	J	ug/kg	13
005	F39-SB-014(0.5-1.0)	Solid	Fluoranthene	8270D	79		ug/kg	13
005	F39-SB-014(0.5-1.0)	Solid	Indeno(1,2,3-c,d)pyrene	8270D	36	J	ug/kg	14
005	F39-SB-014(0.5-1.0)	Solid	Pyrene	8270D	140		ug/kg	14
006	F39-SB-014(3.0-3.5)	Solid	Benzo(a)pyrene	8270D	13	J	ug/kg	15
006	F39-SB-014(3.0-3.5)	Solid	Benzo(b)fluoranthene	8270D	14	J	ug/kg	15
006	F39-SB-014(3.0-3.5)	Solid	Benzo(k)fluoranthene	8270D	11	J	ug/kg	15

(43 detections)

Semivolatile Organic Compounds by GC/MS

Client: ARCADIS U.S., Inc.
Laboratory ID: MD28024-001
Description: G4MW053(0.5-1.0)
Matrix: Solid
Date Sampled: 04/27/2011 1020
% Solids: 93.4 04/28/2011 2313
Date Received: 04/28/2011

Run	Prep Method	Analytical Method	Dilution	Analysis Date	Analyst	Prep Date	Batch
1	3550C	8270D	1	05/04/2011 2327	JGH	04/29/2011 2030	58656

Parameter	CAS Number	Analytical Method	Result	Q	PQL	MDL	Units	Run
Acenaphthene	83-32-9	8270D	ND		69	11	ug/kg	1
Acenaphthylene	208-96-8	8270D	ND		69	11	ug/kg	1
Acetophenone	98-86-2	8270D	ND		69	19	ug/kg	1
Anthracene	120-12-7	8270D	ND		69	7.6	ug/kg	1
Atrazine	1912-24-9	8270D	ND		69	18	ug/kg	1
Benzaldehyde	100-52-7	8270D	ND		69	18	ug/kg	1
Benzo(a)anthracene	56-55-3	8270D	ND		69	9.1	ug/kg	1
Benzo(a)pyrene	50-32-8	8270D	ND		69	9.7	ug/kg	1
Benzo(b)fluoranthene	205-99-2	8270D	ND		69	9.9	ug/kg	1
Benzo(g,h,i)perylene	191-24-2	8270D	ND		69	12	ug/kg	1
Benzo(k)fluoranthene	207-08-9	8270D	ND		69	9.8	ug/kg	1
1,1'-Biphenyl	92-52-4	8270D	ND		69	10	ug/kg	1
4-Bromophenyl phenyl ether	101-55-3	8270D	ND		69	10	ug/kg	1
Butyl benzyl phthalate	85-68-7	8270D	ND		130	46	ug/kg	1
Caprolactam	105-60-2	8270D	ND		69	18	ug/kg	1
Carbazole	86-74-8	8270D	ND		69	15	ug/kg	1
4-Chloro-3-methyl phenol	59-50-7	8270D	ND		69	8.7	ug/kg	1
4-Chloroaniline	106-47-8	8270D	ND		69	7.0	ug/kg	1
bis(2-Chloroethoxy)methane	111-91-1	8270D	ND		69	10	ug/kg	1
bis(2-Chloroethyl)ether	111-44-4	8270D	ND		69	9.5	ug/kg	1
bis(2-Chloroisopropyl)ether	108-60-1	8270D	ND		69	11	ug/kg	1
2-Chloronaphthalene	91-58-7	8270D	ND		69	11	ug/kg	1
2-Chlorophenol	95-57-8	8270D	ND		69	9.5	ug/kg	1
4-Chlorophenyl phenyl ether	7005-72-3	8270D	ND		69	12	ug/kg	1
Chrysene	218-01-9	8270D	ND		69	11	ug/kg	1
Dibenzo(a,h)anthracene	53-70-3	8270D	ND		69	9.4	ug/kg	1
Dibenzofuran	132-64-9	8270D	ND		69	11	ug/kg	1
3,3'-Dichlorobenzidine	91-94-1	8270D	ND		340	38	ug/kg	1
2,4-Dichlorophenol	120-83-2	8270D	ND		69	11	ug/kg	1
Diethylphthalate	84-66-2	8270D	ND		69	23	ug/kg	1
Dimethyl phthalate	131-11-3	8270D	ND		69	23	ug/kg	1
2,4-Dimethylphenol	105-67-9	8270D	ND		69	13	ug/kg	1
Di-n-butyl phthalate	84-74-2	8270D	ND		69	23	ug/kg	1
4,6-Dinitro-2-methylphenol	534-52-1	8270D	ND		340	130	ug/kg	1
2,4-Dinitrophenol	51-28-5	8270D	ND		340	120	ug/kg	1
2,4-Dinitrotoluene	121-14-2	8270D	ND		130	19	ug/kg	1
2,6-Dinitrotoluene	606-20-2	8270D	ND		130	18	ug/kg	1
Di-n-octylphthalate	117-84-0	8270D	ND		69	33	ug/kg	1
bis(2-Ethylhexyl)phthalate	117-81-7	8270D	ND		69	23	ug/kg	1
Fluoranthene	206-44-0	8270D	ND		69	11	ug/kg	1
Fluorene	86-73-7	8270D	ND		69	9.3	ug/kg	1
Hexachlorobenzene	118-74-1	8270D	ND		69	15	ug/kg	1
Hexachlorobutadiene	87-68-3	8270D	ND		69	11	ug/kg	1
Hexachlorocyclopentadiene	77-47-4	8270D	ND		340	25	ug/kg	1

PQL = Practical quantitation limit
B = Detected in the method blank
E = Quantitation of compound exceeded the calibration range
ND = Not detected at or above the MDL
J = Estimated result < PQL and ≥ MDL
P = The RPD between two GC columns exceeds 40%
Where applicable, all soil sample analysis are reported on a dry weight basis unless flagged with a "W"
N = Recovery is out of criteria
H = Out of holding time

Semivolatile Organic Compounds by GC/MS

Client: ARCADIS U.S., Inc.
Laboratory ID: MD28024-001
Description: G4MW053(0.5-1.0)
Matrix: Solid
Date Sampled: 04/27/2011 1020
% Solids: 93.4 04/28/2011 2313
Date Received: 04/28/2011

Run	Prep Method	Analytical Method	Dilution	Analysis Date	Analyst	Prep Date	Batch
1	3550C	8270D	1	05/04/2011 2327	JGH	04/29/2011 2030	58656

Parameter	CAS Number	Analytical Method	Result	Q	PQL	MDL	Units	Run
Hexachloroethane	67-72-1	8270D	ND		69	9.2	ug/kg	1
Indeno(1,2,3-c,d)pyrene	193-39-5	8270D	ND		69	10	ug/kg	1
Isophorone	78-59-1	8270D	ND		69	7.6	ug/kg	1
2-Methylnaphthalene	91-57-6	8270D	ND		69	10	ug/kg	1
2-Methylphenol	95-48-7	8270D	ND		69	6.2	ug/kg	1
3 & 4-Methylphenol	106-44-5	8270D	ND		130	12	ug/kg	1
Naphthalene	91-20-3	8270D	ND		69	11	ug/kg	1
2-Nitroaniline	88-74-4	8270D	ND		130	24	ug/kg	1
3-Nitroaniline	99-09-2	8270D	ND		130	40	ug/kg	1
4-Nitroaniline	100-01-6	8270D	ND		130	20	ug/kg	1
Nitrobenzene	98-95-3	8270D	ND		69	5.6	ug/kg	1
2-Nitrophenol	88-75-5	8270D	ND		130	19	ug/kg	1
4-Nitrophenol	100-02-7	8270D	ND		340	100	ug/kg	1
N-Nitrosodi-n-propylamine	621-64-7	8270D	ND		69	13	ug/kg	1
N-Nitrosodiphenylamine (Diphenylamine)	86-30-6	8270D	ND		69	8.6	ug/kg	1
Pentachlorophenol	87-86-5	8270D	ND		340	140	ug/kg	1
Phenanthrene	85-01-8	8270D	ND		69	9.3	ug/kg	1
Phenol	108-95-2	8270D	ND		69	9.4	ug/kg	1
Pyrene	129-00-0	8270D	ND		69	14	ug/kg	1
2,4,5-Trichlorophenol	95-95-4	8270D	ND		69	9.7	ug/kg	1
2,4,6-Trichlorophenol	88-06-2	8270D	ND		69	10	ug/kg	1

Surrogate	Q	Run 1 % Recovery	Acceptance Limits
2-Fluorobiphenyl		59	33-102
2-Fluorophenol		59	28-104
Nitrobenzene-d5		55	22-109
Phenol-d5		60	27-103
Terphenyl-d14		58	41-120
2,4,6-Tribromophenol		59	30-117

PQL = Practical quantitation limit
B = Detected in the method blank
E = Quantitation of compound exceeded the calibration range
ND = Not detected at or above the MDL
J = Estimated result < PQL and ≥ MDL
P = The RPD between two GC columns exceeds 40%
Where applicable, all soil sample analysis are reported on a dry weight basis unless flagged with a "W"
N = Recovery is out of criteria
H = Out of holding time

Semivolatile Organic Compounds by GC/MS

Client: ARCADIS U.S., Inc.
Laboratory ID: MD28024-002
Description: G4MW053(3.0-3.5)
Matrix: Solid
Date Sampled: 04/27/2011 1025
% Solids: 92.3 04/28/2011 2313
Date Received: 04/28/2011

Run	Prep Method	Analytical Method	Dilution	Analysis Date	Analyst	Prep Date	Batch
1	3550C	8270D	1	05/05/2011 0023	JGH	04/29/2011 2030	58656

Parameter	CAS Number	Analytical Method	Result	Q	PQL	MDL	Units	Run
Acenaphthene	83-32-9	8270D	ND		70	11	ug/kg	1
Acenaphthylene	208-96-8	8270D	ND		70	11	ug/kg	1
Acetophenone	98-86-2	8270D	ND		70	19	ug/kg	1
Anthracene	120-12-7	8270D	ND		70	7.7	ug/kg	1
Atrazine	1912-24-9	8270D	ND		70	18	ug/kg	1
Benzaldehyde	100-52-7	8270D	ND		70	18	ug/kg	1
Benzo(a)anthracene	56-55-3	8270D	ND		70	9.2	ug/kg	1
Benzo(a)pyrene	50-32-8	8270D	ND		70	9.7	ug/kg	1
Benzo(b)fluoranthene	205-99-2	8270D	ND		70	9.9	ug/kg	1
Benzo(g,h,i)perylene	191-24-2	8270D	ND		70	12	ug/kg	1
Benzo(k)fluoranthene	207-08-9	8270D	ND		70	9.9	ug/kg	1
1,1'-Biphenyl	92-52-4	8270D	ND		70	10	ug/kg	1
4-Bromophenyl phenyl ether	101-55-3	8270D	ND		70	10	ug/kg	1
Butyl benzyl phthalate	85-68-7	8270D	ND		130	46	ug/kg	1
Caprolactam	105-60-2	8270D	ND		70	18	ug/kg	1
Carbazole	86-74-8	8270D	ND		70	15	ug/kg	1
4-Chloro-3-methyl phenol	59-50-7	8270D	ND		70	8.7	ug/kg	1
4-Chloroaniline	106-47-8	8270D	ND		70	7.0	ug/kg	1
bis(2-Chloroethoxy)methane	111-91-1	8270D	ND		70	11	ug/kg	1
bis(2-Chloroethyl)ether	111-44-4	8270D	ND		70	9.5	ug/kg	1
bis(2-Chloroisopropyl)ether	108-60-1	8270D	ND		70	11	ug/kg	1
2-Chloronaphthalene	91-58-7	8270D	ND		70	11	ug/kg	1
2-Chlorophenol	95-57-8	8270D	ND		70	9.6	ug/kg	1
4-Chlorophenyl phenyl ether	7005-72-3	8270D	ND		70	12	ug/kg	1
Chrysene	218-01-9	8270D	ND		70	11	ug/kg	1
Dibenzo(a,h)anthracene	53-70-3	8270D	ND		70	9.4	ug/kg	1
Dibenzofuran	132-64-9	8270D	ND		70	11	ug/kg	1
3,3'-Dichlorobenzidine	91-94-1	8270D	ND		340	38	ug/kg	1
2,4-Dichlorophenol	120-83-2	8270D	ND		70	11	ug/kg	1
Diethylphthalate	84-66-2	8270D	ND		70	23	ug/kg	1
Dimethyl phthalate	131-11-3	8270D	ND		70	23	ug/kg	1
2,4-Dimethylphenol	105-67-9	8270D	ND		70	13	ug/kg	1
Di-n-butyl phthalate	84-74-2	8270D	ND		70	23	ug/kg	1
4,6-Dinitro-2-methylphenol	534-52-1	8270D	ND		340	130	ug/kg	1
2,4-Dinitrophenol	51-28-5	8270D	ND		340	120	ug/kg	1
2,4-Dinitrotoluene	121-14-2	8270D	ND		130	19	ug/kg	1
2,6-Dinitrotoluene	606-20-2	8270D	ND		130	18	ug/kg	1
Di-n-octylphthalate	117-84-0	8270D	ND		70	33	ug/kg	1
bis(2-Ethylhexyl)phthalate	117-81-7	8270D	ND		70	23	ug/kg	1
Fluoranthene	206-44-0	8270D	ND		70	11	ug/kg	1
Fluorene	86-73-7	8270D	ND		70	9.3	ug/kg	1
Hexachlorobenzene	118-74-1	8270D	ND		70	15	ug/kg	1
Hexachlorobutadiene	87-68-3	8270D	ND		70	11	ug/kg	1
Hexachlorocyclopentadiene	77-47-4	8270D	ND		340	25	ug/kg	1

PQL = Practical quantitation limit
B = Detected in the method blank
E = Quantitation of compound exceeded the calibration range
ND = Not detected at or above the MDL
J = Estimated result < PQL and ≥ MDL
P = The RPD between two GC columns exceeds 40%
Where applicable, all soil sample analysis are reported on a dry weight basis unless flagged with a "W"
N = Recovery is out of criteria
H = Out of holding time

Semivolatile Organic Compounds by GC/MS

Client: ARCADIS U.S., Inc.
Laboratory ID: MD28024-002
Description: G4MW053(3.0-3.5)
Matrix: Solid
Date Sampled: 04/27/2011 1025
% Solids: 92.3 04/28/2011 2313
Date Received: 04/28/2011

Run	Prep Method	Analytical Method	Dilution	Analysis Date	Analyst	Prep Date	Batch
1	3550C	8270D	1	05/05/2011 0023	JGH	04/29/2011 2030	58656

Parameter	CAS Number	Analytical Method	Result	Q	PQL	MDL	Units	Run
Hexachloroethane	67-72-1	8270D	ND		70	9.2	ug/kg	1
Indeno(1,2,3-c,d)pyrene	193-39-5	8270D	ND		70	10	ug/kg	1
Isophorone	78-59-1	8270D	ND		70	7.6	ug/kg	1
2-Methylnaphthalene	91-57-6	8270D	ND		70	10	ug/kg	1
2-Methylphenol	95-48-7	8270D	ND		70	6.3	ug/kg	1
3 & 4-Methylphenol	106-44-5	8270D	ND		130	12	ug/kg	1
Naphthalene	91-20-3	8270D	ND		70	11	ug/kg	1
2-Nitroaniline	88-74-4	8270D	ND		130	24	ug/kg	1
3-Nitroaniline	99-09-2	8270D	ND		130	40	ug/kg	1
4-Nitroaniline	100-01-6	8270D	ND		130	20	ug/kg	1
Nitrobenzene	98-95-3	8270D	ND		70	5.6	ug/kg	1
2-Nitrophenol	88-75-5	8270D	ND		130	19	ug/kg	1
4-Nitrophenol	100-02-7	8270D	ND		340	100	ug/kg	1
N-Nitrosodi-n-propylamine	621-64-7	8270D	ND		70	13	ug/kg	1
N-Nitrosodiphenylamine (Diphenylamine)	86-30-6	8270D	ND		70	8.6	ug/kg	1
Pentachlorophenol	87-86-5	8270D	ND		340	140	ug/kg	1
Phenanthrene	85-01-8	8270D	ND		70	9.3	ug/kg	1
Phenol	108-95-2	8270D	ND		70	9.4	ug/kg	1
Pyrene	129-00-0	8270D	ND		70	14	ug/kg	1
2,4,5-Trichlorophenol	95-95-4	8270D	ND		70	9.7	ug/kg	1
2,4,6-Trichlorophenol	88-06-2	8270D	ND		70	10	ug/kg	1

Surrogate	Q	Run 1 % Recovery	Acceptance Limits
2-Fluorobiphenyl		63	33-102
2-Fluorophenol		70	28-104
Nitrobenzene-d5		64	22-109
Phenol-d5		74	27-103
Terphenyl-d14		69	41-120
2,4,6-Tribromophenol		72	30-117

PQL = Practical quantitation limit
B = Detected in the method blank
E = Quantitation of compound exceeded the calibration range
ND = Not detected at or above the MDL
J = Estimated result < PQL and ≥ MDL
P = The RPD between two GC columns exceeds 40%
Where applicable, all soil sample analysis are reported on a dry weight basis unless flagged with a "W"
N = Recovery is out of criteria
H = Out of holding time

Semivolatile Organic Compounds by GC/MS

Client: ARCADIS U.S., Inc.
Laboratory ID: MD28024-003
Description: F39-SB-013(0.5-1.0)
Matrix: Solid
Date Sampled: 04/27/2011 0945
% Solids: 90.9 04/28/2011 2313
Date Received: 04/28/2011

Run	Prep Method	Analytical Method	Dilution	Analysis Date	Analyst	Prep Date	Batch
1	3550C	8270D	1	05/05/2011 0042	JGH	04/29/2011 2030	58656

Parameter	CAS Number	Analytical Method	Result	Q	PQL	MDL	Units	Run
Acenaphthene	83-32-9	8270D	20	J	73	12	ug/kg	1
Acenaphthylene	208-96-8	8270D	120		73	11	ug/kg	1
Acetophenone	98-86-2	8270D	ND		73	20	ug/kg	1
Anthracene	120-12-7	8270D	71	J	73	8.1	ug/kg	1
Atrazine	1912-24-9	8270D	ND		73	19	ug/kg	1
Benzaldehyde	100-52-7	8270D	ND		73	19	ug/kg	1
Benzo(a)anthracene	56-55-3	8270D	250		73	9.6	ug/kg	1
Benzo(a)pyrene	50-32-8	8270D	420		73	10	ug/kg	1
Benzo(b)fluoranthene	205-99-2	8270D	500		73	10	ug/kg	1
Benzo(g,h,i)perylene	191-24-2	8270D	250		73	13	ug/kg	1
Benzo(k)fluoranthene	207-08-9	8270D	270		73	10	ug/kg	1
1,1'-Biphenyl	92-52-4	8270D	ND		73	11	ug/kg	1
4-Bromophenyl phenyl ether	101-55-3	8270D	ND		73	11	ug/kg	1
Butyl benzyl phthalate	85-68-7	8270D	ND		140	48	ug/kg	1
Caprolactam	105-60-2	8270D	ND		73	19	ug/kg	1
Carbazole	86-74-8	8270D	ND		73	16	ug/kg	1
4-Chloro-3-methyl phenol	59-50-7	8270D	ND		73	9.2	ug/kg	1
4-Chloroaniline	106-47-8	8270D	ND		73	7.4	ug/kg	1
bis(2-Chloroethoxy)methane	111-91-1	8270D	ND		73	11	ug/kg	1
bis(2-Chloroethyl)ether	111-44-4	8270D	ND		73	10	ug/kg	1
bis(2-Chloroisopropyl)ether	108-60-1	8270D	ND		73	12	ug/kg	1
2-Chloronaphthalene	91-58-7	8270D	ND		73	12	ug/kg	1
2-Chlorophenol	95-57-8	8270D	ND		73	10	ug/kg	1
4-Chlorophenyl phenyl ether	7005-72-3	8270D	ND		73	12	ug/kg	1
Chrysene	218-01-9	8270D	310		73	12	ug/kg	1
Dibenzo(a,h)anthracene	53-70-3	8270D	68	J	73	9.9	ug/kg	1
Dibenzofuran	132-64-9	8270D	ND		73	11	ug/kg	1
3,3'-Dichlorobenzidine	91-94-1	8270D	ND		360	40	ug/kg	1
2,4-Dichlorophenol	120-83-2	8270D	ND		73	11	ug/kg	1
Diethylphthalate	84-66-2	8270D	ND		73	24	ug/kg	1
Dimethyl phthalate	131-11-3	8270D	ND		73	24	ug/kg	1
2,4-Dimethylphenol	105-67-9	8270D	ND		73	14	ug/kg	1
Di-n-butyl phthalate	84-74-2	8270D	ND		73	24	ug/kg	1
4,6-Dinitro-2-methylphenol	534-52-1	8270D	ND		360	140	ug/kg	1
2,4-Dinitrophenol	51-28-5	8270D	ND		360	120	ug/kg	1
2,4-Dinitrotoluene	121-14-2	8270D	ND		140	20	ug/kg	1
2,6-Dinitrotoluene	606-20-2	8270D	ND		140	19	ug/kg	1
Di-n-octylphthalate	117-84-0	8270D	ND		73	35	ug/kg	1
bis(2-Ethylhexyl)phthalate	117-81-7	8270D	ND		73	24	ug/kg	1
Fluoranthene	206-44-0	8270D	150		73	12	ug/kg	1
Fluorene	86-73-7	8270D	110		73	9.8	ug/kg	1
Hexachlorobenzene	118-74-1	8270D	ND		73	16	ug/kg	1
Hexachlorobutadiene	87-68-3	8270D	ND		73	12	ug/kg	1
Hexachlorocyclopentadiene	77-47-4	8270D	ND		360	27	ug/kg	1

PQL = Practical quantitation limit
B = Detected in the method blank
E = Quantitation of compound exceeded the calibration range
ND = Not detected at or above the MDL
J = Estimated result < PQL and ≥ MDL
P = The RPD between two GC columns exceeds 40%
Where applicable, all soil sample analysis are reported on a dry weight basis unless flagged with a "W"
N = Recovery is out of criteria
H = Out of holding time

Semivolatile Organic Compounds by GC/MS

Client: ARCADIS U.S., Inc.
Laboratory ID: MD28024-003
Description: F39-SB-013(0.5-1.0)
Matrix: Solid
Date Sampled: 04/27/2011 0945
% Solids: 90.9 04/28/2011 2313
Date Received: 04/28/2011

Run	Prep Method	Analytical Method	Dilution	Analysis Date	Analyst	Prep Date	Batch
1	3550C	8270D	1	05/05/2011 0042	JGH	04/29/2011 2030	58656

Parameter	CAS Number	Analytical Method	Result	Q	PQL	MDL	Units	Run
Hexachloroethane	67-72-1	8270D	ND		73	9.7	ug/kg	1
Indeno(1,2,3-c,d)pyrene	193-39-5	8270D	220		73	11	ug/kg	1
Isophorone	78-59-1	8270D	ND		73	8.0	ug/kg	1
2-Methylnaphthalene	91-57-6	8270D	ND		73	11	ug/kg	1
2-Methylphenol	95-48-7	8270D	ND		73	6.6	ug/kg	1
3 & 4-Methylphenol	106-44-5	8270D	ND		140	13	ug/kg	1
Naphthalene	91-20-3	8270D	ND		73	11	ug/kg	1
2-Nitroaniline	88-74-4	8270D	ND		140	25	ug/kg	1
3-Nitroaniline	99-09-2	8270D	ND		140	42	ug/kg	1
4-Nitroaniline	100-01-6	8270D	ND		140	21	ug/kg	1
Nitrobenzene	98-95-3	8270D	ND		73	5.9	ug/kg	1
2-Nitrophenol	88-75-5	8270D	ND		140	20	ug/kg	1
4-Nitrophenol	100-02-7	8270D	ND		360	110	ug/kg	1
N-Nitrosodi-n-propylamine	621-64-7	8270D	ND		73	14	ug/kg	1
N-Nitrosodiphenylamine (Diphenylamine)	86-30-6	8270D	ND		73	9.0	ug/kg	1
Pentachlorophenol	87-86-5	8270D	ND		360	150	ug/kg	1
Phenanthrene	85-01-8	8270D	210		73	9.8	ug/kg	1
Phenol	108-95-2	8270D	ND		73	9.9	ug/kg	1
Pyrene	129-00-0	8270D	350		73	14	ug/kg	1
2,4,5-Trichlorophenol	95-95-4	8270D	ND		73	10	ug/kg	1
2,4,6-Trichlorophenol	88-06-2	8270D	ND		73	11	ug/kg	1

Surrogate	Q	Run 1 % Recovery	Acceptance Limits
2-Fluorobiphenyl		66	33-102
2-Fluorophenol		65	28-104
Nitrobenzene-d5		61	22-109
Phenol-d5		68	27-103
Terphenyl-d14		66	41-120
2,4,6-Tribromophenol		75	30-117

PQL = Practical quantitation limit
B = Detected in the method blank
E = Quantitation of compound exceeded the calibration range
ND = Not detected at or above the MDL
J = Estimated result < PQL and ≥ MDL
P = The RPD between two GC columns exceeds 40%
Where applicable, all soil sample analysis are reported on a dry weight basis unless flagged with a "W"
N = Recovery is out of criteria
H = Out of holding time

Semivolatile Organic Compounds by GC/MS

Client: ARCADIS U.S., Inc.
Laboratory ID: MD28024-004
Description: F39-SB-013(3.0-3.5)
Matrix: Solid
Date Sampled: 04/27/2011 1000
% Solids: 87.8 04/28/2011 2313
Date Received: 04/28/2011

Run	Prep Method	Analytical Method	Dilution	Analysis Date	Analyst	Prep Date	Batch
1	3550C	8270D	1	05/05/2011 0101	JGH	04/29/2011 2030	58656

Parameter	CAS Number	Analytical Method	Result	Q	PQL	MDL	Units	Run
Acenaphthene	83-32-9	8270D	ND		75	12	ug/kg	1
Acenaphthylene	208-96-8	8270D	200		75	12	ug/kg	1
Acetophenone	98-86-2	8270D	ND		75	20	ug/kg	1
Anthracene	120-12-7	8270D	89		75	8.2	ug/kg	1
Atrazine	1912-24-9	8270D	ND		75	19	ug/kg	1
Benzaldehyde	100-52-7	8270D	ND		75	19	ug/kg	1
Benzo(a)anthracene	56-55-3	8270D	430		75	9.8	ug/kg	1
Benzo(a)pyrene	50-32-8	8270D	680		75	10	ug/kg	1
Benzo(b)fluoranthene	205-99-2	8270D	790		75	11	ug/kg	1
Benzo(g,h,i)perylene	191-24-2	8270D	370		75	13	ug/kg	1
Benzo(k)fluoranthene	207-08-9	8270D	440		75	11	ug/kg	1
1,1'-Biphenyl	92-52-4	8270D	ND		75	11	ug/kg	1
4-Bromophenyl phenyl ether	101-55-3	8270D	ND		75	11	ug/kg	1
Butyl benzyl phthalate	85-68-7	8270D	ND		140	49	ug/kg	1
Caprolactam	105-60-2	8270D	ND		75	19	ug/kg	1
Carbazole	86-74-8	8270D	ND		75	16	ug/kg	1
4-Chloro-3-methyl phenol	59-50-7	8270D	ND		75	9.4	ug/kg	1
4-Chloroaniline	106-47-8	8270D	ND		75	7.5	ug/kg	1
bis(2-Chloroethoxy)methane	111-91-1	8270D	ND		75	11	ug/kg	1
bis(2-Chloroethyl)ether	111-44-4	8270D	ND		75	10	ug/kg	1
bis(2-Chloroisopropyl)ether	108-60-1	8270D	ND		75	12	ug/kg	1
2-Chloronaphthalene	91-58-7	8270D	ND		75	12	ug/kg	1
2-Chlorophenol	95-57-8	8270D	ND		75	10	ug/kg	1
4-Chlorophenyl phenyl ether	7005-72-3	8270D	ND		75	13	ug/kg	1
Chrysene	218-01-9	8270D	570		75	12	ug/kg	1
Dibenzo(a,h)anthracene	53-70-3	8270D	100		75	10	ug/kg	1
Dibenzofuran	132-64-9	8270D	ND		75	12	ug/kg	1
3,3'-Dichlorobenzidine	91-94-1	8270D	ND		370	40	ug/kg	1
2,4-Dichlorophenol	120-83-2	8270D	ND		75	11	ug/kg	1
Diethylphthalate	84-66-2	8270D	ND		75	24	ug/kg	1
Dimethyl phthalate	131-11-3	8270D	ND		75	24	ug/kg	1
2,4-Dimethylphenol	105-67-9	8270D	ND		75	14	ug/kg	1
Di-n-butyl phthalate	84-74-2	8270D	ND		75	24	ug/kg	1
4,6-Dinitro-2-methylphenol	534-52-1	8270D	ND		370	140	ug/kg	1
2,4-Dinitrophenol	51-28-5	8270D	ND		370	130	ug/kg	1
2,4-Dinitrotoluene	121-14-2	8270D	ND		140	20	ug/kg	1
2,6-Dinitrotoluene	606-20-2	8270D	ND		140	19	ug/kg	1
Di-n-octylphthalate	117-84-0	8270D	ND		75	36	ug/kg	1
bis(2-Ethylhexyl)phthalate	117-81-7	8270D	ND		75	24	ug/kg	1
Fluoranthene	206-44-0	8270D	230		75	12	ug/kg	1
Fluorene	86-73-7	8270D	11	J	75	10	ug/kg	1
Hexachlorobenzene	118-74-1	8270D	ND		75	16	ug/kg	1
Hexachlorobutadiene	87-68-3	8270D	ND		75	12	ug/kg	1
Hexachlorocyclopentadiene	77-47-4	8270D	ND		370	27	ug/kg	1

PQL = Practical quantitation limit
B = Detected in the method blank
E = Quantitation of compound exceeded the calibration range
ND = Not detected at or above the MDL
J = Estimated result < PQL and ≥ MDL
P = The RPD between two GC columns exceeds 40%
Where applicable, all soil sample analysis are reported on a dry weight basis unless flagged with a "W"
N = Recovery is out of criteria
H = Out of holding time

Semivolatile Organic Compounds by GC/MS

Client: ARCADIS U.S., Inc.
Laboratory ID: MD28024-004
Description: F39-SB-013(3.0-3.5)
Matrix: Solid
Date Sampled: 04/27/2011 1000
% Solids: 87.8 04/28/2011 2313
Date Received: 04/28/2011

Run	Prep Method	Analytical Method	Dilution	Analysis Date	Analyst	Prep Date	Batch
1	3550C	8270D	1	05/05/2011 0101	JGH	04/29/2011 2030	58656

Parameter	CAS Number	Analytical Method	Result	Q	PQL	MDL	Units	Run
Hexachloroethane	67-72-1	8270D	ND		75	9.9	ug/kg	1
Indeno(1,2,3-c,d)pyrene	193-39-5	8270D	330		75	11	ug/kg	1
Isophorone	78-59-1	8270D	ND		75	8.2	ug/kg	1
2-Methylnaphthalene	91-57-6	8270D	ND		75	11	ug/kg	1
2-Methylphenol	95-48-7	8270D	ND		75	6.7	ug/kg	1
3 & 4-Methylphenol	106-44-5	8270D	ND		140	13	ug/kg	1
Naphthalene	91-20-3	8270D	ND		75	11	ug/kg	1
2-Nitroaniline	88-74-4	8270D	ND		140	25	ug/kg	1
3-Nitroaniline	99-09-2	8270D	ND		140	43	ug/kg	1
4-Nitroaniline	100-01-6	8270D	ND		140	21	ug/kg	1
Nitrobenzene	98-95-3	8270D	ND		75	6.0	ug/kg	1
2-Nitrophenol	88-75-5	8270D	ND		140	20	ug/kg	1
4-Nitrophenol	100-02-7	8270D	ND		370	110	ug/kg	1
N-Nitrosodi-n-propylamine	621-64-7	8270D	ND		75	14	ug/kg	1
N-Nitrosodiphenylamine (Diphenylamine)	86-30-6	8270D	ND		75	9.2	ug/kg	1
Pentachlorophenol	87-86-5	8270D	ND		370	150	ug/kg	1
Phenanthrene	85-01-8	8270D	ND		75	10	ug/kg	1
Phenol	108-95-2	8270D	ND		75	10	ug/kg	1
Pyrene	129-00-0	8270D	610		75	15	ug/kg	1
2,4,5-Trichlorophenol	95-95-4	8270D	ND		75	10	ug/kg	1
2,4,6-Trichlorophenol	88-06-2	8270D	ND		75	11	ug/kg	1

Surrogate	Q	Run 1 % Recovery	Acceptance Limits
2-Fluorobiphenyl		51	33-102
2-Fluorophenol		49	28-104
Nitrobenzene-d5		46	22-109
Phenol-d5		54	27-103
Terphenyl-d14		54	41-120
2,4,6-Tribromophenol		60	30-117

PQL = Practical quantitation limit
B = Detected in the method blank
E = Quantitation of compound exceeded the calibration range
ND = Not detected at or above the MDL
J = Estimated result < PQL and ≥ MDL
P = The RPD between two GC columns exceeds 40%
Where applicable, all soil sample analysis are reported on a dry weight basis unless flagged with a "W"
N = Recovery is out of criteria
H = Out of holding time

Semivolatile Organic Compounds by GC/MS

Client: ARCADIS U.S., Inc.
Laboratory ID: MD28024-005
Description: F39-SB-014(0.5-1.0)
Matrix: Solid
Date Sampled: 04/27/2011 1005
% Solids: 91.1 04/28/2011 2313
Date Received: 04/28/2011

Run	Prep Method	Analytical Method	Dilution	Analysis Date	Analyst	Prep Date	Batch
1	3550C	8270D	1	05/05/2011 0119	JGH	04/29/2011 2030	58656

Parameter	CAS Number	Analytical Method	Result	Q	PQL	MDL	Units	Run
Acenaphthene	83-32-9	8270D	ND		73	12	ug/kg	1
Acenaphthylene	208-96-8	8270D	29	J	73	11	ug/kg	1
Acetophenone	98-86-2	8270D	ND		73	20	ug/kg	1
Anthracene	120-12-7	8270D	15	J	73	8.0	ug/kg	1
Atrazine	1912-24-9	8270D	ND		73	18	ug/kg	1
Benzaldehyde	100-52-7	8270D	ND		73	18	ug/kg	1
Benzo(a)anthracene	56-55-3	8270D	88		73	9.6	ug/kg	1
Benzo(a)pyrene	50-32-8	8270D	73		73	10	ug/kg	1
Benzo(b)fluoranthene	205-99-2	8270D	97		73	10	ug/kg	1
Benzo(g,h,i)perylene	191-24-2	8270D	41	J	73	13	ug/kg	1
Benzo(k)fluoranthene	207-08-9	8270D	46	J	73	10	ug/kg	1
1,1'-Biphenyl	92-52-4	8270D	ND		73	11	ug/kg	1
4-Bromophenyl phenyl ether	101-55-3	8270D	ND		73	11	ug/kg	1
Butyl benzyl phthalate	85-68-7	8270D	ND		140	48	ug/kg	1
Caprolactam	105-60-2	8270D	ND		73	18	ug/kg	1
Carbazole	86-74-8	8270D	ND		73	16	ug/kg	1
4-Chloro-3-methyl phenol	59-50-7	8270D	ND		73	9.2	ug/kg	1
4-Chloroaniline	106-47-8	8270D	ND		73	7.4	ug/kg	1
bis(2-Chloroethoxy)methane	111-91-1	8270D	ND		73	11	ug/kg	1
bis(2-Chloroethyl)ether	111-44-4	8270D	ND		73	10	ug/kg	1
bis(2-Chloroisopropyl)ether	108-60-1	8270D	ND		73	12	ug/kg	1
2-Chloronaphthalene	91-58-7	8270D	ND		73	12	ug/kg	1
2-Chlorophenol	95-57-8	8270D	ND		73	10	ug/kg	1
4-Chlorophenyl phenyl ether	7005-72-3	8270D	ND		73	12	ug/kg	1
Chrysene	218-01-9	8270D	94		73	12	ug/kg	1
Dibenzo(a,h)anthracene	53-70-3	8270D	12	J	73	9.9	ug/kg	1
Dibenzofuran	132-64-9	8270D	ND		73	11	ug/kg	1
3,3'-Dichlorobenzidine	91-94-1	8270D	ND		360	39	ug/kg	1
2,4-Dichlorophenol	120-83-2	8270D	ND		73	11	ug/kg	1
Diethylphthalate	84-66-2	8270D	ND		73	24	ug/kg	1
Dimethyl phthalate	131-11-3	8270D	ND		73	24	ug/kg	1
2,4-Dimethylphenol	105-67-9	8270D	ND		73	14	ug/kg	1
Di-n-butyl phthalate	84-74-2	8270D	ND		73	24	ug/kg	1
4,6-Dinitro-2-methylphenol	534-52-1	8270D	ND		360	140	ug/kg	1
2,4-Dinitrophenol	51-28-5	8270D	ND		360	120	ug/kg	1
2,4-Dinitrotoluene	121-14-2	8270D	ND		140	20	ug/kg	1
2,6-Dinitrotoluene	606-20-2	8270D	ND		140	19	ug/kg	1
Di-n-octylphthalate	117-84-0	8270D	ND		73	35	ug/kg	1
bis(2-Ethylhexyl)phthalate	117-81-7	8270D	ND		73	24	ug/kg	1
Fluoranthene	206-44-0	8270D	79		73	11	ug/kg	1
Fluorene	86-73-7	8270D	ND		73	9.8	ug/kg	1
Hexachlorobenzene	118-74-1	8270D	ND		73	16	ug/kg	1
Hexachlorobutadiene	87-68-3	8270D	ND		73	12	ug/kg	1
Hexachlorocyclopentadiene	77-47-4	8270D	ND		360	27	ug/kg	1

PQL = Practical quantitation limit
B = Detected in the method blank
E = Quantitation of compound exceeded the calibration range
ND = Not detected at or above the MDL
J = Estimated result < PQL and ≥ MDL
P = The RPD between two GC columns exceeds 40%
Where applicable, all soil sample analysis are reported on a dry weight basis unless flagged with a "W"
N = Recovery is out of criteria
H = Out of holding time

Semivolatile Organic Compounds by GC/MS

Client: ARCADIS U.S., Inc.
Laboratory ID: MD28024-005
Description: F39-SB-014(0.5-1.0)
Matrix: Solid
Date Sampled: 04/27/2011 1005
% Solids: 91.1 04/28/2011 2313
Date Received: 04/28/2011

Run	Prep Method	Analytical Method	Dilution	Analysis Date	Analyst	Prep Date	Batch
1	3550C	8270D	1	05/05/2011 0119	JGH	04/29/2011 2030	58656

Parameter	CAS Number	Analytical Method	Result	Q	PQL	MDL	Units	Run
Hexachloroethane	67-72-1	8270D	ND		73	9.6	ug/kg	1
Indeno(1,2,3-c,d)pyrene	193-39-5	8270D	36	J	73	11	ug/kg	1
Isophorone	78-59-1	8270D	ND		73	8.0	ug/kg	1
2-Methylnaphthalene	91-57-6	8270D	ND		73	11	ug/kg	1
2-Methylphenol	95-48-7	8270D	ND		73	6.6	ug/kg	1
3 & 4-Methylphenol	106-44-5	8270D	ND		140	13	ug/kg	1
Naphthalene	91-20-3	8270D	ND		73	11	ug/kg	1
2-Nitroaniline	88-74-4	8270D	ND		140	25	ug/kg	1
3-Nitroaniline	99-09-2	8270D	ND		140	42	ug/kg	1
4-Nitroaniline	100-01-6	8270D	ND		140	21	ug/kg	1
Nitrobenzene	98-95-3	8270D	ND		73	5.8	ug/kg	1
2-Nitrophenol	88-75-5	8270D	ND		140	20	ug/kg	1
4-Nitrophenol	100-02-7	8270D	ND		360	100	ug/kg	1
N-Nitrosodi-n-propylamine	621-64-7	8270D	ND		73	14	ug/kg	1
N-Nitrosodiphenylamine (Diphenylamine)	86-30-6	8270D	ND		73	9.0	ug/kg	1
Pentachlorophenol	87-86-5	8270D	ND		360	150	ug/kg	1
Phenanthrene	85-01-8	8270D	ND		73	9.7	ug/kg	1
Phenol	108-95-2	8270D	ND		73	9.8	ug/kg	1
Pyrene	129-00-0	8270D	140		73	14	ug/kg	1
2,4,5-Trichlorophenol	95-95-4	8270D	ND		73	10	ug/kg	1
2,4,6-Trichlorophenol	88-06-2	8270D	ND		73	11	ug/kg	1

Surrogate	Q	Run 1 % Recovery	Acceptance Limits
2-Fluorobiphenyl		58	33-102
2-Fluorophenol		56	28-104
Nitrobenzene-d5		54	22-109
Phenol-d5		61	27-103
Terphenyl-d14		57	41-120
2,4,6-Tribromophenol		66	30-117

PQL = Practical quantitation limit
B = Detected in the method blank
E = Quantitation of compound exceeded the calibration range
ND = Not detected at or above the MDL
J = Estimated result < PQL and ≥ MDL
P = The RPD between two GC columns exceeds 40%
Where applicable, all soil sample analysis are reported on a dry weight basis unless flagged with a "W"
N = Recovery is out of criteria
H = Out of holding time

Semivolatile Organic Compounds by GC/MS

Client: ARCADIS U.S., Inc.
Laboratory ID: MD28024-006
Description: F39-SB-014(3.0-3.5)
Matrix: Solid
Date Sampled: 04/27/2011 1010
% Solids: 89.9 04/28/2011 2313
Date Received: 04/28/2011

Run	Prep Method	Analytical Method	Dilution	Analysis Date	Analyst	Prep Date	Batch
1	3550C	8270D	1	05/05/2011 0138	JGH	04/29/2011 2030	58656

Parameter	CAS Number	Analytical Method	Result	Q	PQL	MDL	Units	Run
Acenaphthene	83-32-9	8270D	ND		73	12	ug/kg	1
Acenaphthylene	208-96-8	8270D	ND		73	11	ug/kg	1
Acetophenone	98-86-2	8270D	ND		73	20	ug/kg	1
Anthracene	120-12-7	8270D	ND		73	8.1	ug/kg	1
Atrazine	1912-24-9	8270D	ND		73	19	ug/kg	1
Benzaldehyde	100-52-7	8270D	ND		73	19	ug/kg	1
Benzo(a)anthracene	56-55-3	8270D	ND		73	9.6	ug/kg	1
Benzo(a)pyrene	50-32-8	8270D	13	J	73	10	ug/kg	1
Benzo(b)fluoranthene	205-99-2	8270D	14	J	73	10	ug/kg	1
Benzo(g,h,i)perylene	191-24-2	8270D	ND		73	13	ug/kg	1
Benzo(k)fluoranthene	207-08-9	8270D	11	J	73	10	ug/kg	1
1,1'-Biphenyl	92-52-4	8270D	ND		73	11	ug/kg	1
4-Bromophenyl phenyl ether	101-55-3	8270D	ND		73	11	ug/kg	1
Butyl benzyl phthalate	85-68-7	8270D	ND		140	48	ug/kg	1
Caprolactam	105-60-2	8270D	ND		73	19	ug/kg	1
Carbazole	86-74-8	8270D	ND		73	16	ug/kg	1
4-Chloro-3-methyl phenol	59-50-7	8270D	ND		73	9.2	ug/kg	1
4-Chloroaniline	106-47-8	8270D	ND		73	7.4	ug/kg	1
bis(2-Chloroethoxy)methane	111-91-1	8270D	ND		73	11	ug/kg	1
bis(2-Chloroethyl)ether	111-44-4	8270D	ND		73	10	ug/kg	1
bis(2-Chloroisopropyl)ether	108-60-1	8270D	ND		73	12	ug/kg	1
2-Chloronaphthalene	91-58-7	8270D	ND		73	12	ug/kg	1
2-Chlorophenol	95-57-8	8270D	ND		73	10	ug/kg	1
4-Chlorophenyl phenyl ether	7005-72-3	8270D	ND		73	12	ug/kg	1
Chrysene	218-01-9	8270D	ND		73	12	ug/kg	1
Dibenzo(a,h)anthracene	53-70-3	8270D	ND		73	9.9	ug/kg	1
Dibenzofuran	132-64-9	8270D	ND		73	11	ug/kg	1
3,3'-Dichlorobenzidine	91-94-1	8270D	ND		360	40	ug/kg	1
2,4-Dichlorophenol	120-83-2	8270D	ND		73	11	ug/kg	1
Diethylphthalate	84-66-2	8270D	ND		73	24	ug/kg	1
Dimethyl phthalate	131-11-3	8270D	ND		73	24	ug/kg	1
2,4-Dimethylphenol	105-67-9	8270D	ND		73	14	ug/kg	1
Di-n-butyl phthalate	84-74-2	8270D	ND		73	24	ug/kg	1
4,6-Dinitro-2-methylphenol	534-52-1	8270D	ND		360	140	ug/kg	1
2,4-Dinitrophenol	51-28-5	8270D	ND		360	120	ug/kg	1
2,4-Dinitrotoluene	121-14-2	8270D	ND		140	20	ug/kg	1
2,6-Dinitrotoluene	606-20-2	8270D	ND		140	19	ug/kg	1
Di-n-octylphthalate	117-84-0	8270D	ND		73	35	ug/kg	1
bis(2-Ethylhexyl)phthalate	117-81-7	8270D	ND		73	24	ug/kg	1
Fluoranthene	206-44-0	8270D	ND		73	12	ug/kg	1
Fluorene	86-73-7	8270D	ND		73	9.8	ug/kg	1
Hexachlorobenzene	118-74-1	8270D	ND		73	16	ug/kg	1
Hexachlorobutadiene	87-68-3	8270D	ND		73	12	ug/kg	1
Hexachlorocyclopentadiene	77-47-4	8270D	ND		360	27	ug/kg	1

PQL = Practical quantitation limit
B = Detected in the method blank
E = Quantitation of compound exceeded the calibration range
ND = Not detected at or above the MDL
J = Estimated result < PQL and ≥ MDL
P = The RPD between two GC columns exceeds 40%
Where applicable, all soil sample analysis are reported on a dry weight basis unless flagged with a "W"
N = Recovery is out of criteria
H = Out of holding time

Semivolatile Organic Compounds by GC/MS

Client: ARCADIS U.S., Inc.
Laboratory ID: MD28024-006
Description: F39-SB-014(3.0-3.5)
Matrix: Solid
Date Sampled: 04/27/2011 1010
% Solids: 89.9 04/28/2011 2313
Date Received: 04/28/2011

Run	Prep Method	Analytical Method	Dilution	Analysis Date	Analyst	Prep Date	Batch
1	3550C	8270D	1	05/05/2011 0138	JGH	04/29/2011 2030	58656

Parameter	CAS Number	Analytical Method	Result	Q	PQL	MDL	Units	Run
Hexachloroethane	67-72-1	8270D	ND		73	9.7	ug/kg	1
Indeno(1,2,3-c,d)pyrene	193-39-5	8270D	ND		73	11	ug/kg	1
Isophorone	78-59-1	8270D	ND		73	8.0	ug/kg	1
2-Methylnaphthalene	91-57-6	8270D	ND		73	11	ug/kg	1
2-Methylphenol	95-48-7	8270D	ND		73	6.6	ug/kg	1
3 & 4-Methylphenol	106-44-5	8270D	ND		140	13	ug/kg	1
Naphthalene	91-20-3	8270D	ND		73	11	ug/kg	1
2-Nitroaniline	88-74-4	8270D	ND		140	25	ug/kg	1
3-Nitroaniline	99-09-2	8270D	ND		140	42	ug/kg	1
4-Nitroaniline	100-01-6	8270D	ND		140	21	ug/kg	1
Nitrobenzene	98-95-3	8270D	ND		73	5.9	ug/kg	1
2-Nitrophenol	88-75-5	8270D	ND		140	20	ug/kg	1
4-Nitrophenol	100-02-7	8270D	ND		360	110	ug/kg	1
N-Nitrosodi-n-propylamine	621-64-7	8270D	ND		73	14	ug/kg	1
N-Nitrosodiphenylamine (Diphenylamine)	86-30-6	8270D	ND		73	9.0	ug/kg	1
Pentachlorophenol	87-86-5	8270D	ND		360	150	ug/kg	1
Phenanthrene	85-01-8	8270D	ND		73	9.8	ug/kg	1
Phenol	108-95-2	8270D	ND		73	9.9	ug/kg	1
Pyrene	129-00-0	8270D	ND		73	14	ug/kg	1
2,4,5-Trichlorophenol	95-95-4	8270D	ND		73	10	ug/kg	1
2,4,6-Trichlorophenol	88-06-2	8270D	ND		73	11	ug/kg	1

Surrogate	Q	Run 1 % Recovery	Acceptance Limits
2-Fluorobiphenyl		64	33-102
2-Fluorophenol		65	28-104
Nitrobenzene-d5		60	22-109
Phenol-d5		68	27-103
Terphenyl-d14		63	41-120
2,4,6-Tribromophenol		72	30-117

PQL = Practical quantitation limit
B = Detected in the method blank
E = Quantitation of compound exceeded the calibration range
ND = Not detected at or above the MDL
J = Estimated result < PQL and ≥ MDL
P = The RPD between two GC columns exceeds 40%
Where applicable, all soil sample analysis are reported on a dry weight basis unless flagged with a "W"
N = Recovery is out of criteria
H = Out of holding time

QC Summary

Semivolatile Organic Compounds by GC/MS - MB

Sample ID: MQ58656-001
Batch: 58656
Analytical Method: 8270D

Matrix: Solid
Prep Method: 3550C
Prep Date: 04/29/2011 2030

Parameter	Result	Q	Dil	PQL	MDL	Units	Analysis Date
1,1'-Biphenyl	ND		1	67	10	ug/kg	05/04/2011 2212
2,4,5-Trichlorophenol	ND		1	67	9.3	ug/kg	05/04/2011 2212
2,4,6-Trichlorophenol	ND		1	67	9.8	ug/kg	05/04/2011 2212
2,4-Dichlorophenol	ND		1	67	10	ug/kg	05/04/2011 2212
2,4-Dimethylphenol	ND		1	67	12	ug/kg	05/04/2011 2212
2,4-Dinitrophenol	ND		1	330	110	ug/kg	05/04/2011 2212
2,4-Dinitrotoluene	ND		1	130	18	ug/kg	05/04/2011 2212
2,6-Dinitrotoluene	ND		1	130	17	ug/kg	05/04/2011 2212
2-Chloronaphthalene	ND		1	67	11	ug/kg	05/04/2011 2212
2-Chlorophenol	ND		1	67	9.2	ug/kg	05/04/2011 2212
2-Methylnaphthalene	ND		1	67	9.9	ug/kg	05/04/2011 2212
2-Methylphenol	ND		1	67	6.0	ug/kg	05/04/2011 2212
2-Nitroaniline	ND		1	130	23	ug/kg	05/04/2011 2212
2-Nitrophenol	ND		1	130	18	ug/kg	05/04/2011 2212
3 & 4-Methylphenol	ND		1	130	12	ug/kg	05/04/2011 2212
3,3'-Dichlorobenzidine	ND		1	330	36	ug/kg	05/04/2011 2212
3-Nitroaniline	ND		1	130	39	ug/kg	05/04/2011 2212
4,6-Dinitro-2-methylphenol	ND		1	330	130	ug/kg	05/04/2011 2212
4-Bromophenyl phenyl ether	ND		1	67	9.8	ug/kg	05/04/2011 2212
4-Chloro-3-methyl phenol	ND		1	67	8.4	ug/kg	05/04/2011 2212
4-Chloroaniline	ND		1	67	6.8	ug/kg	05/04/2011 2212
4-Chlorophenyl phenyl ether	ND		1	67	11	ug/kg	05/04/2011 2212
4-Nitroaniline	ND		1	130	19	ug/kg	05/04/2011 2212
4-Nitrophenol	ND		1	330	96	ug/kg	05/04/2011 2212
Acenaphthene	ND		1	67	11	ug/kg	05/04/2011 2212
Acenaphthylene	ND		1	67	10	ug/kg	05/04/2011 2212
Acetophenone	ND		1	67	18	ug/kg	05/04/2011 2212
Anthracene	ND		1	67	7.4	ug/kg	05/04/2011 2212
Atrazine	ND		1	67	17	ug/kg	05/04/2011 2212
Benzaldehyde	ND		1	67	17	ug/kg	05/04/2011 2212
Benzo(a)anthracene	ND		1	67	8.8	ug/kg	05/04/2011 2212
Benzo(a)pyrene	ND		1	67	9.3	ug/kg	05/04/2011 2212
Benzo(b)fluoranthene	ND		1	67	9.6	ug/kg	05/04/2011 2212
Benzo(g,h,i)perylene	ND		1	67	12	ug/kg	05/04/2011 2212
Benzo(k)fluoranthene	ND		1	67	9.5	ug/kg	05/04/2011 2212
bis(2-Chloroethoxy)methane	ND		1	67	10	ug/kg	05/04/2011 2212
bis(2-Chloroethyl)ether	ND		1	67	9.2	ug/kg	05/04/2011 2212
bis(2-Chloroisopropyl)ether	ND		1	67	11	ug/kg	05/04/2011 2212
bis(2-Ethylhexyl)phthalate	ND		1	67	22	ug/kg	05/04/2011 2212
Butyl benzyl phthalate	ND		1	130	44	ug/kg	05/04/2011 2212
Caprolactam	ND		1	67	17	ug/kg	05/04/2011 2212
Carbazole	ND		1	67	14	ug/kg	05/04/2011 2212
Chrysene	ND		1	67	11	ug/kg	05/04/2011 2212
Di-n-butyl phthalate	ND		1	67	22	ug/kg	05/04/2011 2212

PQL = Practical quantitation limit
ND = Not detected at or above the MDL
P = The RPD between two GC columns exceeds 40%
J = Estimated result < PQL and ≥ MDL
N - Recovery is out of criteria
+ - RPD is out of criteria

Where applicable, all soil sample analysis are reported on a dry weight basis unless flagged with a "W"

Note: Calculations are performed before rounding to avoid round-off errors in calculated results

Semivolatile Organic Compounds by GC/MS - MB

Sample ID: MQ58656-001
Batch: 58656
Analytical Method: 8270D

Matrix: Solid
Prep Method: 3550C
Prep Date: 04/29/2011 2030

Parameter	Result	Q	Dil	PQL	MDL	Units	Analysis Date
Di-n-octylphthalate	ND		1	67	32	ug/kg	05/04/2011 2212
Dibenzo(a,h)anthracene	ND		1	67	9.1	ug/kg	05/04/2011 2212
Dibenzofuran	ND		1	67	10	ug/kg	05/04/2011 2212
Diethylphthalate	ND		1	67	22	ug/kg	05/04/2011 2212
Dimethyl phthalate	ND		1	67	22	ug/kg	05/04/2011 2212
Fluoranthene	ND		1	67	11	ug/kg	05/04/2011 2212
Fluorene	ND		1	67	9.0	ug/kg	05/04/2011 2212
Hexachlorobenzene	ND		1	67	15	ug/kg	05/04/2011 2212
Hexachlorobutadiene	ND		1	67	11	ug/kg	05/04/2011 2212
Hexachlorocyclopentadiene	ND		1	330	25	ug/kg	05/04/2011 2212
Hexachloroethane	ND		1	67	8.9	ug/kg	05/04/2011 2212
Indeno(1,2,3-c,d)pyrene	ND		1	67	9.7	ug/kg	05/04/2011 2212
Isophorone	ND		1	67	7.4	ug/kg	05/04/2011 2212
N-Nitrosodi-n-propylamine	ND		1	67	13	ug/kg	05/04/2011 2212
N-Nitrosodiphenylamine (Diphenylamine)	ND		1	67	8.3	ug/kg	05/04/2011 2212
Naphthalene	ND		1	67	10	ug/kg	05/04/2011 2212
Nitrobenzene	ND		1	67	5.4	ug/kg	05/04/2011 2212
Pentachlorophenol	ND		1	330	140	ug/kg	05/04/2011 2212
Phenanthrene	ND		1	67	9.0	ug/kg	05/04/2011 2212
Phenol	ND		1	67	9.1	ug/kg	05/04/2011 2212
Pyrene	ND		1	67	13	ug/kg	05/04/2011 2212

Surrogate	Q	% Rec	Acceptance Limit
2,4,6-Tribromophenol		60	30-117
2-Fluorobiphenyl		61	33-102
2-Fluorophenol		61	28-104
Nitrobenzene-d5		57	22-109
Phenol-d5		64	27-103
Terphenyl-d14		65	41-120

PQL = Practical quantitation limit
ND = Not detected at or above the MDL
P = The RPD between two GC columns exceeds 40%
J = Estimated result < PQL and ≥ MDL
N - Recovery is out of criteria
+ - RPD is out of criteria

Where applicable, all soil sample analysis are reported on a dry weight basis unless flagged with a "W"

Note: Calculations are performed before rounding to avoid round-off errors in calculated results

Semivolatile Organic Compounds by GC/MS - LCS

Sample ID: MQ58656-002
Batch: 58656
Analytical Method: 8270D

Matrix: Solid
Prep Method: 3550C
Prep Date: 04/29/2011 2030

Parameter	Spike Amount (ug/kg)	Result (ug/kg)	Q	Dil	% Rec	% Rec Limit	Analysis Date
2,4,5-Trichlorophenol	1300	1000		1	76	30-130	05/04/2011 2230
2,4,6-Trichlorophenol	1300	770		1	58	30-130	05/04/2011 2230
2,4-Dichlorophenol	1300	900		1	67	30-130	05/04/2011 2230
2,4-Dimethylphenol	1300	1000		1	76	30-130	05/04/2011 2230
2,4-Dinitrophenol	6700	4000		1	60	30-130	05/04/2011 2230
2,4-Dinitrotoluene	2700	2000		1	74	30-130	05/04/2011 2230
2,6-Dinitrotoluene	2700	1900		1	72	30-130	05/04/2011 2230
2-Chloronaphthalene	1300	890		1	67	30-130	05/04/2011 2230
2-Chlorophenol	1300	920		1	69	30-130	05/04/2011 2230
2-Methylnaphthalene	1300	850		1	64	30-130	05/04/2011 2230
2-Methylphenol	1300	840		1	63	30-130	05/04/2011 2230
2-Nitroaniline	2700	1600		1	59	30-130	05/04/2011 2230
2-Nitrophenol	2700	1700		1	64	30-130	05/04/2011 2230
3 & 4-Methylphenol	2700	1900		1	72	30-130	05/04/2011 2230
3-Nitroaniline	2700	1900		1	71	30-130	05/04/2011 2230
4,6-Dinitro-2-methylphenol	6700	5100		1	76	30-130	05/04/2011 2230
4-Bromophenyl phenyl ether	1300	950		1	71	30-130	05/04/2011 2230
4-Chloro-3-methyl phenol	1300	970		1	73	30-130	05/04/2011 2230
4-Chloroaniline	1300	340		1	25	10-130	05/04/2011 2230
4-Chlorophenyl phenyl ether	1300	920		1	69	30-130	05/04/2011 2230
4-Nitroaniline	2700	2200		1	83	30-130	05/04/2011 2230
4-Nitrophenol	6700	4800		1	73	30-130	05/04/2011 2230
Acenaphthene	1300	900		1	68	30-130	05/04/2011 2230
Acenaphthylene	1300	960		1	72	30-130	05/04/2011 2230
Anthracene	1300	970		1	73	30-130	05/04/2011 2230
Benzo(a)anthracene	1300	1000		1	75	30-130	05/04/2011 2230
Benzo(a)pyrene	1300	1100		1	81	30-130	05/04/2011 2230
Benzo(b)fluoranthene	1300	810		1	61	30-130	05/04/2011 2230
Benzo(g,h,i)perylene	1300	930		1	70	30-130	05/04/2011 2230
Benzo(k)fluoranthene	1300	1200		1	87	30-130	05/04/2011 2230
bis(2-Chloroethoxy)methane	1300	870		1	65	30-130	05/04/2011 2230
bis(2-Chloroethyl)ether	1300	860		1	64	30-130	05/04/2011 2230
bis(2-Chloroisopropyl)ether	1300	840		1	63	30-130	05/04/2011 2230
bis(2-Ethylhexyl)phthalate	1300	1000		1	78	30-130	05/04/2011 2230
Butyl benzyl phthalate	1300	990		1	74	30-130	05/04/2011 2230
Carbazole	1300	1000		1	75	30-130	05/04/2011 2230
Chrysene	1300	990		1	74	30-130	05/04/2011 2230
Di-n-butyl phthalate	1300	1000		1	78	30-130	05/04/2011 2230
Di-n-octylphthalate	1300	1100		1	84	30-130	05/04/2011 2230
Dibenzo(a,h)anthracene	1300	980		1	74	30-130	05/04/2011 2230
Dibenzofuran	1300	910		1	68	30-130	05/04/2011 2230
Diethylphthalate	1300	960		1	72	30-130	05/04/2011 2230
Dimethyl phthalate	1300	960		1	72	30-130	05/04/2011 2230
Fluoranthene	1300	970		1	73	30-130	05/04/2011 2230

PQL = Practical quantitation limit
ND = Not detected at or above the MDL
P = The RPD between two GC columns exceeds 40%
J = Estimated result < PQL and ≥ MDL
N - Recovery is out of criteria
+ - RPD is out of criteria

Where applicable, all soil sample analysis are reported on a dry weight basis unless flagged with a "W"

Note: Calculations are performed before rounding to avoid round-off errors in calculated results

Semivolatile Organic Compounds by GC/MS - LCS

Sample ID: MQ58656-002
Batch: 58656
Analytical Method: 8270D

Matrix: Solid
Prep Method: 3550C
Prep Date: 04/29/2011 2030

Parameter	Spike Amount (ug/kg)	Result (ug/kg)	Q	Dil	% Rec	% Rec Limit	Analysis Date
Fluorene	1300	940		1	70	30-130	05/04/2011 2230
Hexachlorobenzene	1300	910		1	68	30-130	05/04/2011 2230
Hexachlorobutadiene	1300	770		1	57	30-130	05/04/2011 2230
Hexachlorocyclopentadiene	6700	4200		1	63	30-130	05/04/2011 2230
Hexachloroethane	1300	770		1	58	30-130	05/04/2011 2230
Indeno(1,2,3-c,d)pyrene	1300	990		1	74	30-130	05/04/2011 2230
N-Nitrosodiphenylamine (Diphenylamine)	1300	1100		1	83	30-130	05/04/2011 2230
Naphthalene	1300	820		1	62	30-130	05/04/2011 2230
Nitrobenzene	1300	880		1	66	30-130	05/04/2011 2230
Pentachlorophenol	6700	4400		1	66	30-130	05/04/2011 2230
Phenanthrene	1300	960		1	72	30-130	05/04/2011 2230
Phenol	1300	940		1	71	30-130	05/04/2011 2230
Pyrene	1300	1000		1	75	30-130	05/04/2011 2230

Surrogate	Q	% Rec	Acceptance Limit
2,4,6-Tribromophenol		67	30-117
2-Fluorobiphenyl		66	33-102
2-Fluorophenol		68	28-104
Nitrobenzene-d5		65	22-109
Phenol-d5		71	27-103
Terphenyl-d14		61	41-120

PQL = Practical quantitation limit
ND = Not detected at or above the MDL
P = The RPD between two GC columns exceeds 40%
J = Estimated result < PQL and ≥ MDL
N - Recovery is out of criteria
+ - RPD is out of criteria

Where applicable, all soil sample analysis are reported on a dry weight basis unless flagged with a "W"

Note: Calculations are performed before rounding to avoid round-off errors in calculated results

Semivolatile Organic Compounds by GC/MS - MS

Sample ID: MD28024-001MS
Batch: 58656
Analytical Method: 8270D

Matrix: Solid
Prep Method: 3550C
Prep Date: 04/29/2011 2030

Parameter	Sample Amount (ug/kg)	Spike Amount (ug/kg)	Result (ug/kg)	Q	Dil	% Rec	% Rec Limit	Analysis Date
Acenaphthene	ND	1400	890		1	63	30-130	05/04/2011 2346
Acenaphthylene	ND	1400	960		1	68	30-130	05/04/2011 2346
Anthracene	ND	1400	980		1	70	30-130	05/04/2011 2346
Benzo(a)anthracene	ND	1400	1000		1	74	30-130	05/04/2011 2346
Benzo(a)pyrene	ND	1400	1100		1	78	30-130	05/04/2011 2346
Benzo(b)fluoranthene	ND	1400	820		1	59	30-130	05/04/2011 2346
Benzo(g,h,i)perylene	ND	1400	970		1	69	30-130	05/04/2011 2346
Benzo(k)fluoranthene	ND	1400	1200		1	84	30-130	05/04/2011 2346
4-Bromophenyl phenyl ether	ND	1400	970		1	69	30-130	05/04/2011 2346
Butyl benzyl phthalate	ND	1400	1100		1	79	30-130	05/04/2011 2346
Carbazole	ND	1400	1000		1	73	30-130	05/04/2011 2346
4-Chloro-3-methyl phenol	ND	1400	980		1	70	30-130	05/04/2011 2346
4-Chloroaniline	ND	1400	310		1	22	10-130	05/04/2011 2346
bis(2-Chloroethoxy)methane	ND	1400	850		1	60	30-130	05/04/2011 2346
bis(2-Chloroethyl)ether	ND	1400	800		1	57	30-130	05/04/2011 2346
bis(2-Chloroisopropyl)ether	ND	1400	810		1	58	30-130	05/04/2011 2346
2-Chloronaphthalene	ND	1400	720		1	51	30-130	05/04/2011 2346
2-Chlorophenol	ND	1400	910		1	64	30-130	05/04/2011 2346
4-Chlorophenyl phenyl ether	ND	1400	940		1	67	30-130	05/04/2011 2346
Chrysene	ND	1400	1000		1	72	30-130	05/04/2011 2346
Dibenzo(a,h)anthracene	ND	1400	1000		1	72	30-130	05/04/2011 2346
Dibenzofuran	ND	1400	920		1	65	30-130	05/04/2011 2346
2,4-Dichlorophenol	ND	1400	890		1	63	30-130	05/04/2011 2346
Diethylphthalate	ND	1400	980		1	70	30-130	05/04/2011 2346
Dimethyl phthalate	ND	1400	950		1	67	30-130	05/04/2011 2346
2,4-Dimethylphenol	ND	1400	1000		1	71	30-130	05/04/2011 2346
Di-n-butyl phthalate	ND	1400	1100		1	76	30-130	05/04/2011 2346
4,6-Dinitro-2-methylphenol	ND	7000	4700		1	66	30-130	05/04/2011 2346
2,4-Dinitrophenol	ND	7000	3600		1	51	30-130	05/04/2011 2346
2,4-Dinitrotoluene	ND	2800	2000		1	69	30-130	05/04/2011 2346
2,6-Dinitrotoluene	ND	2800	1900		1	68	30-130	05/04/2011 2346
Di-n-octylphthalate	ND	1400	1200		1	85	30-130	05/04/2011 2346
bis(2-Ethylhexyl)phthalate	ND	1400	1100		1	80	30-130	05/04/2011 2346
Fluoranthene	ND	1400	990		1	70	30-130	05/04/2011 2346
Fluorene	ND	1400	940		1	67	30-130	05/04/2011 2346
Hexachlorobenzene	ND	1400	930		1	66	30-130	05/04/2011 2346
Hexachlorobutadiene	ND	1400	730		1	52	30-130	05/04/2011 2346
Hexachlorocyclopentadiene	ND	7000	3900		1	55	30-130	05/04/2011 2346
Hexachloroethane	ND	1400	690		1	49	30-130	05/04/2011 2346
Indeno(1,2,3-c,d)pyrene	ND	1400	1000		1	71	30-130	05/04/2011 2346
2-Methylnaphthalene	ND	1400	840		1	59	30-130	05/04/2011 2346
2-Methylphenol	ND	1400	830		1	59	30-130	05/04/2011 2346
3 & 4-Methylphenol	ND	2800	1900		1	66	30-130	05/04/2011 2346
Naphthalene	ND	1400	810		1	57	30-130	05/04/2011 2346

PQL = Practical quantitation limit
ND = Not detected at or above the MDL
P = The RPD between two GC columns exceeds 40%
J = Estimated result < PQL and ≥ MDL
N - Recovery is out of criteria
+ - RPD is out of criteria

Where applicable, all soil sample analysis are reported on a dry weight basis unless flagged with a "W"

Note: Calculations are performed before rounding to avoid round-off errors in calculated results

Semivolatile Organic Compounds by GC/MS - MS

Sample ID: MD28024-001MS
Batch: 58656
Analytical Method: 8270D

Matrix: Solid
Prep Method: 3550C
Prep Date: 04/29/2011 2030

Parameter	Sample Amount (ug/kg)	Spike Amount (ug/kg)	Result (ug/kg)	Q	Dil	% Rec	% Rec Limit	Analysis Date
2-Nitroaniline	ND	2800	1500		1	53	30-130	05/04/2011 2346
3-Nitroaniline	ND	2800	1800		1	64	30-130	05/04/2011 2346
4-Nitroaniline	ND	2800	2100		1	73	30-130	05/04/2011 2346
Nitrobenzene	ND	1400	870		1	62	30-130	05/04/2011 2346
2-Nitrophenol	ND	2800	1700		1	59	30-130	05/04/2011 2346
4-Nitrophenol	ND	7000	4800		1	68	30-130	05/04/2011 2346
N-Nitrosodiphenylamine (Diphenylamine)	ND	1400	1100		1	79	30-130	05/04/2011 2346
Pentachlorophenol	ND	7000	4800		1	69	30-130	05/04/2011 2346
Phenanthrene	ND	1400	980		1	69	30-130	05/04/2011 2346
Phenol	ND	1400	910		1	64	30-130	05/04/2011 2346
Pyrene	ND	1400	1000		1	74	30-130	05/04/2011 2346
2,4,5-Trichlorophenol	ND	1400	960		1	68	30-130	05/04/2011 2346
2,4,6-Trichlorophenol	ND	1400	870		1	62	30-130	05/04/2011 2346

Surrogate	Q	% Rec	Acceptance Limit
2-Fluorobiphenyl		60	33-102
2-Fluorophenol		61	28-104
Nitrobenzene-d5		59	22-109
Phenol-d5		64	27-103
Terphenyl-d14		60	41-120
2,4,6-Tribromophenol		64	30-117

PQL = Practical quantitation limit
ND = Not detected at or above the MDL
P = The RPD between two GC columns exceeds 40%
J = Estimated result < PQL and ≥ MDL
N - Recovery is out of criteria
+ - RPD is out of criteria

Where applicable, all soil sample analysis are reported on a dry weight basis unless flagged with a "W"

Note: Calculations are performed before rounding to avoid round-off errors in calculated results

Semivolatile Organic Compounds by GC/MS - MSD

Sample ID: MD28024-001MD
Batch: 58656
Analytical Method: 8270D

Matrix: Solid
Prep Method: 3550C
Prep Date: 04/29/2011 2030

Parameter	Sample Amount (ug/kg)	Spike Amount (ug/kg)	Result (ug/kg)	Q	Dil	% Rec	% RPD	% Rec Limit	% RPD Limit	Analysis Date
Acenaphthene	ND	1400	1000		1	73	14	30-130	20	05/05/2011 0005
Acenaphthylene	ND	1400	1100		1	79	15	30-130	20	05/05/2011 0005
Anthracene	ND	1400	1100		1	78	12	30-130	20	05/05/2011 0005
Benzo(a)anthracene	ND	1400	1100		1	81	9.5	30-130	20	05/05/2011 0005
Benzo(a)pyrene	ND	1400	1200		1	86	10	30-130	20	05/05/2011 0005
Benzo(b)fluoranthene	ND	1400	1000		1	71	19	30-130	20	05/05/2011 0005
Benzo(g,h,i)perylene	ND	1400	1100		1	75	8.4	30-130	20	05/05/2011 0005
Benzo(k)fluoranthene	ND	1400	1200		1	87	3.6	30-130	20	05/05/2011 0005
4-Bromophenyl phenyl ether	ND	1400	1100		1	78	13	30-130	20	05/05/2011 0005
Butyl benzyl phthalate	ND	1400	1200		1	85	7.8	30-130	20	05/05/2011 0005
Carbazole	ND	1400	1200		1	83	13	30-130	20	05/05/2011 0005
4-Chloro-3-methyl phenol	ND	1400	1100		1	81	16	30-130	20	05/05/2011 0005
4-Chloroaniline	ND	1400	370		1	26	18	10-130	40	05/05/2011 0005
bis(2-Chloroethoxy)methane	ND	1400	990		1	70	15	30-130	20	05/05/2011 0005
bis(2-Chloroethyl)ether	ND	1400	960		1	68	18	30-130	20	05/05/2011 0005
bis(2-Chloroisopropyl)ether	ND	1400	940		1	66	14	30-130	20	05/05/2011 0005
2-Chloronaphthalene	ND	1400	940	+	1	67	27	30-130	20	05/05/2011 0005
2-Chlorophenol	ND	1400	1100		1	75	15	30-130	20	05/05/2011 0005
4-Chlorophenyl phenyl ether	ND	1400	1100		1	77	15	30-130	20	05/05/2011 0005
Chrysene	ND	1400	1100		1	79	9.1	30-130	20	05/05/2011 0005
Dibenzo(a,h)anthracene	ND	1400	1100		1	79	10	30-130	20	05/05/2011 0005
Dibenzofuran	ND	1400	1100		1	75	14	30-130	20	05/05/2011 0005
2,4-Dichlorophenol	ND	1400	1000		1	74	16	30-130	20	05/05/2011 0005
Diethylphthalate	ND	1400	1100		1	78	12	30-130	20	05/05/2011 0005
Dimethyl phthalate	ND	1400	1100		1	79	16	30-130	20	05/05/2011 0005
2,4-Dimethylphenol	ND	1400	1200		1	81	14	30-130	20	05/05/2011 0005
Di-n-butyl phthalate	ND	1400	1200		1	84	10	30-130	20	05/05/2011 0005
4,6-Dinitro-2-methylphenol	ND	7100	5600		1	79	18	30-130	20	05/05/2011 0005
2,4-Dinitrophenol	ND	7100	4600	+	1	65	24	30-130	20	05/05/2011 0005
2,4-Dinitrotoluene	ND	2800	2200		1	80	14	30-130	20	05/05/2011 0005
2,6-Dinitrotoluene	ND	2800	2200		1	79	16	30-130	20	05/05/2011 0005
Di-n-octylphthalate	ND	1400	1300		1	93	9.4	30-130	20	05/05/2011 0005
bis(2-Ethylhexyl)phthalate	ND	1400	1200		1	83	4.3	30-130	20	05/05/2011 0005
Fluoranthene	ND	1400	1100		1	79	12	30-130	20	05/05/2011 0005
Fluorene	ND	1400	1100		1	78	15	30-130	20	05/05/2011 0005
Hexachlorobenzene	ND	1400	1100		1	75	13	30-130	20	05/05/2011 0005
Hexachlorobutadiene	ND	1400	880		1	62	18	30-130	20	05/05/2011 0005
Hexachlorocyclopentadiene	ND	7100	4400		1	62	12	30-130	20	05/05/2011 0005
Hexachloroethane	ND	1400	830		1	59	19	30-130	20	05/05/2011 0005
Indeno(1,2,3-c,d)pyrene	ND	1400	1100		1	79	10	30-130	20	05/05/2011 0005
2-Methylnaphthalene	ND	1400	990		1	70	17	30-130	20	05/05/2011 0005
2-Methylphenol	ND	1400	950		1	67	14	30-130	20	05/05/2011 0005
3 & 4-Methylphenol	ND	2800	2200		1	76	14	30-130	20	05/05/2011 0005
Naphthalene	ND	1400	930		1	66	15	30-130	20	05/05/2011 0005

PQL = Practical quantitation limit
ND = Not detected at or above the MDL
P = The RPD between two GC columns exceeds 40%
J = Estimated result < PQL and ≥ MDL
N - Recovery is out of criteria
+ - RPD is out of criteria

Where applicable, all soil sample analysis are reported on a dry weight basis unless flagged with a "W"

Note: Calculations are performed before rounding to avoid round-off errors in calculated results

Semivolatile Organic Compounds by GC/MS - MSD

Sample ID: MD28024-001MD
Batch: 58656
Analytical Method: 8270D

Matrix: Solid
Prep Method: 3550C
Prep Date: 04/29/2011 2030

Parameter	Sample Amount (ug/kg)	Spike Amount (ug/kg)	Result (ug/kg)	Q	Dil	% Rec	% RPD	% Rec Limit	% RPD Limit	Analysis Date
2-Nitroaniline	ND	2800	1700		1	61	14	30-130	20	05/05/2011 0005
3-Nitroaniline	ND	2800	2100		1	74	14	30-130	20	05/05/2011 0005
4-Nitroaniline	ND	2800	2300		1	81	11	30-130	20	05/05/2011 0005
Nitrobenzene	ND	1400	1000		1	71	15	30-130	20	05/05/2011 0005
2-Nitrophenol	ND	2800	2000		1	70	17	30-130	20	05/05/2011 0005
4-Nitrophenol	ND	7100	5600		1	79	15	30-130	20	05/05/2011 0005
N-Nitrosodiphenylamine (Diphenylamine)	ND	1400	1200		1	88	11	30-130	20	05/05/2011 0005
Pentachlorophenol	ND	7100	5600		1	79	15	30-130	20	05/05/2011 0005
Phenanthrene	ND	1400	1100		1	79	13	30-130	20	05/05/2011 0005
Phenol	ND	1400	1100		1	75	15	30-130	20	05/05/2011 0005
Pyrene	ND	1400	1200		1	82	11	30-130	20	05/05/2011 0005
2,4,5-Trichlorophenol	ND	1400	1100		1	79	15	30-130	20	05/05/2011 0005
2,4,6-Trichlorophenol	ND	1400	1100		1	75	19	30-130	20	05/05/2011 0005

Surrogate	Q	% Rec	Acceptance Limit
2-Fluorobiphenyl		67	33-102
2-Fluorophenol		71	28-104
Nitrobenzene-d5		67	22-109
Phenol-d5		73	27-103
Terphenyl-d14		64	41-120
2,4,6-Tribromophenol		74	30-117

PQL = Practical quantitation limit
ND = Not detected at or above the MDL
P = The RPD between two GC columns exceeds 40%
J = Estimated result < PQL and ≥ MDL
N - Recovery is out of criteria
+ - RPD is out of criteria

Where applicable, all soil sample analysis are reported on a dry weight basis unless flagged with a "W"

Note: Calculations are performed before rounding to avoid round-off errors in calculated results

Shealy Environmental Services, Inc.
106 Vantage Point Drive
West Columbia, South Carolina 29172
Telephone No. (803) 791-9700 Fax No. (803) 791-9111
www.shealylab.com

SHEALY

Chain of Custody Record

Number 01175

Client: Arcadis	Report to Contact: Shelley Gibbons	Sampler (Printed Name): Josh Frizzell	Quote No.: 14192
Address: 801 Corporate Center Dr. #300	Telephone No. / Fax No. / Email: Shelley.Gibbons@arcadis-us.com	Waybill No.	Page 1 of 1
City: Raleigh; State: NC; Zip Code: 27607	Preservative: 1. Unpres. 2. NaOH/ZnA 3. H2SO4 4. HNO3 5. HCL 6. Na Thio. 7. NaOH		
Project Name: FST-39			
Project Number: P08HAFS.F39A.DG0FI	P.O Number		

Sample ID / Description (Containers for each sample may be combined on one line)	Date	Time	G=Grab C=Composite	Matrix GW	DW	WW	S	Other	Analysis: SVOCs 8270	Remarks / Cooler ID
Number of Containers									1	
Bottle (See Instructions on back)									M	
Preservative									1	
Lot No.									MD28024	
G4MW053(0.5-1.0)	4-27-11	1020	G				X		X	No more samples expected for FST-39
G4MW053(3.0-3.5)	4-27-11	1025	G				X		X	
F39-SB-013(0.5-1.0)	4-27-11	0945	G				X		X	
F39-SB-013(3.0-3.5)	4-27-11	1000	G				X		X	
F39-SB-014(0.5-1.0)	4-27-11	1005	G				X		X	
F39-SB-014(3.0-3.5	4-27-11	1010	G				X		X	

4-27-2011

Turn Around Time Required (Prior lab approval required for expedited TAT)	Sample Disposal	QC Requirements (Specify)	Possible Hazard Identification
☒ Standard ☐ Rush (Please Specify)	☐ Return to Client ☒ Disposal by Lab		☐Non-Hazard ☐Flammable ☐Skin Irritant ☐Poison ☒Unknown

	Date	Time		Date	Time
1. Relinquished by / Sampler	4-27-11	1600	1. Received by		
2. Relinquished by			2. Received by		
3. Relinquished by			3. Received by		
4. Relinquished by: FedEx	4/28/11	1150	4. Laboratory Received by	4/28/11	1150

Note: All samples are retained for six weeks from receipt unless other arrangements are made.

LAB USE ONLY
Received on Ice (Check) ☒ Yes ☐ No ☐ Ice Pack Receipt Temp. 1.0 °C Temp. Blank ☐ Y / ☒ N

Shealy Environmental Services, Inc.
Document Number: F-AD-016
Revision Number: 7

Page 1 of 1
Replaces Date: 05/29/07
Effective Date: 02/23/11

Sample Receipt Checklist (SRC)

Client: Arcadis Cooler Inspected by/date: [illegible] / 4/28/11 Lot #: MD28024

Means of receipt: ☐ SESI ☐ Client ☐ UPS ☑ FedEx ☐ Airborne Exp ☐ Other

Yes ☑	No ☐		1. Were custody seals present on the cooler?
Yes ☑	No ☐		2. If custody seals were present, were they intact and unbroken?

Cooler ID/temperature upon receipt 1-0 °C / °C / °C / °C / °C / °C / °C / °C

Method: ☑ Temperature Blank ☐ Against Bottles
Method of coolant: ☑ Wet Ice ☐ Blue Ice ☐ Dry Ice ☐ None

If response is No (or Yes for 14, 15, 16), an explanation/resolution must be provided.

Yes ☐	No ☐	NA ☑	3. If temperature of any cooler exceeded 6.0°C, was Project Manager notified? PM notified by SRC, phone, note (circle one), other:_____. (For coolers received via commercial courier, PMs are to be notified immediately.
Yes ☑	No ☐	NA ☐	4. Is the commercial courier's packing slip attached to this form?
Yes ☑	No ☐		5. Were proper custody procedures (relinquished/received) followed?
Yes ☑	No ☐		6. Were sample IDs listed?
Yes ☑	No ☐		7. Was collection date & time listed?
Yes ☑	No ☐		8. Were tests to be performed listed on the COC?
Yes ☑	No ☐		9. Did all samples arrive in the proper containers for each test?
Yes ☑	No ☐		10. Did all container label information (ID, date, time) agree with COC?
Yes ☑	No ☐		11. Did all containers arrive in good condition (unbroken, lids on, etc.)?
Yes ☑	No ☐		12. Was adequate sample volume available?
Yes ☑	No ☐		13. Were all samples received within ½ the holding time or 48 hours, whichever comes first?
Yes ☐	No ☑		14. Were any samples containers missing?
Yes ☐	No ☑		15. Were there any excess samples not listed on COC?
Yes ☐	No ☐	NA ☑	16. Were bubbles present >"pea-size" (¼"or 6mm in diameter) in any VOA vials?
Yes ☐	No ☐	NA ☑	17. Were all metals/O&G/HEM/nutrient samples received at a pH of <2?
Yes ☐	No ☐	NA ☑	18. Were all cyanide and/or sulfide samples received at a pH >12?
Yes ☐	No ☐	NA ☑	19. Were all applicable NH3/TKN/cyanide/phenol/BNA/pest/PCB/herb (<0.2mg/L)samples free of residual chlorine?
Yes ☐	No ☑	NA ☐	20. Were collection temperatures documented on the COC for NC samples?

Sample Preservation (Must be completed for any sample(s) incorrectly preserved or with headspace.)

Sample(s)_____ were received incorrectly preserved and were adjusted accordingly in sample receiving with _____ (H_2SO_4,HNO_3,HCl,NaOH) with the SR # (number)

Sample(s)_____ were received with bubbles >6 mm in diameter.

Sample(s)_____ were received with TRC >0.2 mg/L for NH3/TKN/cyanide/BNA/pest/PCB/herb.

Corrective Action taken, if necessary:
Was client notified: Yes ☐ No ☐
SESI employee:_____
Comments:

This portion can be removed for recipient's records.
4-27-2011 FedEx Tracking Number 874197703096
Sender's Name X [illegible] Phone 919 854-1282
Company ARCADIS G & M OF NC INC
Address 801 CORPORATE CENTER DR
RALEIGH State NC ZIP 27607-5243
Your Internal Billing Reference

Report of Analysis

ARCADIS U.S., Inc.
30 Patewood Drive
Suite 155
Greenville, SC 29615
Attention: Allison Fang

Project Name: FST-39

Project Number: GP08HAFS.F39A.DGOFI

Lot Number: ME20017

Date Completed: 06/08/2011

Nisreen Saikaly
Project Manager

This report shall not be reproduced, except in its entirety, without the written approval of Shealy Environmental Services, Inc.

The following non-paginated documents are considered part of this report: Chain of Custody Record and Sample Receipt Checklist.

ME20017

Case Narrative
ARCADIS U.S., Inc.
Lot Number: ME20017

This Report of Analysis contains the analytical result(s) for the sample(s) listed on the Sample Summary following this Case Narrative. The sample receiving date is documented in the header information associated with each sample.

All results listed in this report relate only to the samples that are contained within this report.

Sample receipt, sample analysis, and data review have been performed in accordance with the most current approved NELAC standards, the Shealy Environmental Services, Inc. ("Shealy") Quality Assurance Management Plan (QAMP), standard operating procedures (SOPs), and Shealy policies. Any exceptions to the NELAC standards, the QAMP, SOPs or policies are qualified on the results page or discussed below.

Shealy is not NELAC certified for Phosphorus by 365.1 but is certified in SC and NC.

Shealy is not NELAC certified for VPH, but is certified for VPH in NC.

If you have any questions regarding this report please contact the Shealy Project Manager listed on the cover page.

Semivolatile Organic Compounds

The LCS recovery for Hexachloroethane was slightly outside method control limits in batch 60216. As per method, it is statistically likely that a few analytes will be outside control limits; up to five analytes may marginally exceed the control limits. Therefore the associated sample results were reported and no corrective action was required.

Sample Summary

ARCADIS U.S., Inc.

Lot Number: ME20017

Sample Number	Sample ID	Matrix	Date Sampled	Date Received
001	F39SB015(0-0.5)	Solid	05/19/2011 0915	05/20/2011
002	F39SB015(3-3.5)	Solid	05/19/2011 0930	05/20/2011
003	F39SB016(0-0.5)	Solid	05/19/2011 1000	05/20/2011
004	F39SB016(3-3.5)	Solid	05/19/2011 1005	05/20/2011
005	F39SB017(0-0.5)	Solid	05/19/2011 1020	05/20/2011
006	F39SB017(3-3.5)	Solid	05/19/2011 1026	05/20/2011

(6 samples)

Executive Summary
ARCADIS U.S., Inc.
Lot Number: ME20017

Sample	Sample ID	Matrix	Parameter	Method	Result	Q	Units	Page
001	F39SB015(0-0.5)	Solid	4-Chloroaniline	8270D	68	BJ	ug/kg	5
002	F39SB015(3-3.5)	Solid	4-Chloroaniline	8270D	23	BJ	ug/kg	7
003	F39SB016(0-0.5)	Solid	Benzo(a)pyrene	8270D	11	J	ug/kg	9
003	F39SB016(0-0.5)	Solid	Benzo(b)fluoranthene	8270D	15	J	ug/kg	9
003	F39SB016(0-0.5)	Solid	4-Chloroaniline	8270D	15	BJ	ug/kg	9
003	F39SB016(0-0.5)	Solid	Fluoranthene	8270D	13	J	ug/kg	9
003	F39SB016(0-0.5)	Solid	Pyrene	8270D	19	J	ug/kg	10
005	F39SB017(0-0.5)	Solid	Acenaphthylene	8270D	66	J	ug/kg	13
005	F39SB017(0-0.5)	Solid	Anthracene	8270D	31	J	ug/kg	13
005	F39SB017(0-0.5)	Solid	Benzo(a)anthracene	8270D	70		ug/kg	13
005	F39SB017(0-0.5)	Solid	Benzo(a)pyrene	8270D	91		ug/kg	13
005	F39SB017(0-0.5)	Solid	Benzo(b)fluoranthene	8270D	140		ug/kg	13
005	F39SB017(0-0.5)	Solid	Benzo(g,h,i)perylene	8270D	89		ug/kg	13
005	F39SB017(0-0.5)	Solid	Benzo(k)fluoranthene	8270D	50	J	ug/kg	13
005	F39SB017(0-0.5)	Solid	1,1'-Biphenyl	8270D	12	J	ug/kg	13
005	F39SB017(0-0.5)	Solid	Chrysene	8270D	100		ug/kg	13
005	F39SB017(0-0.5)	Solid	Dibenzo(a,h)anthracene	8270D	19	J	ug/kg	13
005	F39SB017(0-0.5)	Solid	Fluoranthene	8270D	120		ug/kg	13
005	F39SB017(0-0.5)	Solid	Indeno(1,2,3-c,d)pyrene	8270D	62	J	ug/kg	14
005	F39SB017(0-0.5)	Solid	2-Methylnaphthalene	8270D	15	J	ug/kg	14
005	F39SB017(0-0.5)	Solid	Phenanthrene	8270D	52	J	ug/kg	14
005	F39SB017(0-0.5)	Solid	Pyrene	8270D	140		ug/kg	14
006	F39SB017(3-3.5)	Solid	Acenaphthylene	8270D	200		ug/kg	15
006	F39SB017(3-3.5)	Solid	Anthracene	8270D	69	J	ug/kg	15
006	F39SB017(3-3.5)	Solid	Benzo(a)anthracene	8270D	320		ug/kg	15
006	F39SB017(3-3.5)	Solid	Benzo(a)pyrene	8270D	430		ug/kg	15
006	F39SB017(3-3.5)	Solid	Benzo(b)fluoranthene	8270D	480		ug/kg	15
006	F39SB017(3-3.5)	Solid	Benzo(g,h,i)perylene	8270D	200		ug/kg	15
006	F39SB017(3-3.5)	Solid	Benzo(k)fluoranthene	8270D	250		ug/kg	15
006	F39SB017(3-3.5)	Solid	Chrysene	8270D	410		ug/kg	15
006	F39SB017(3-3.5)	Solid	Dibenzo(a,h)anthracene	8270D	50	J	ug/kg	15
006	F39SB017(3-3.5)	Solid	Fluoranthene	8270D	130		ug/kg	15
006	F39SB017(3-3.5)	Solid	Indeno(1,2,3-c,d)pyrene	8270D	160		ug/kg	16
006	F39SB017(3-3.5)	Solid	2-Methylnaphthalene	8270D	18	J	ug/kg	16
006	F39SB017(3-3.5)	Solid	Naphthalene	8270D	11	J	ug/kg	16
006	F39SB017(3-3.5)	Solid	Phenanthrene	8270D	31	J	ug/kg	16
006	F39SB017(3-3.5)	Solid	Pyrene	8270D	260		ug/kg	16

(37 detections)

Semivolatile Organic Compounds by GC/MS

Client: ARCADIS U.S., Inc.
Laboratory ID: ME20017-001
Description: F39SB015(0-0.5)
Matrix: Solid
Date Sampled: 05/19/2011 0915
% Solids: 91.3 05/20/2011 1618
Date Received: 05/20/2011

Run	Prep Method	Analytical Method	Dilution	Analysis Date	Analyst	Prep Date	Batch
1	3550C	8270D	1	05/27/2011 2302	JGH	05/23/2011 1751	60216
2	3550C	8270D	1	05/30/2011 2235	JGH	05/23/2011 1751	60216

Parameter	CAS Number	Analytical Method	Result	Q	PQL	MDL	Units	Run
Acenaphthene	83-32-9	8270D	ND		72	11	ug/kg	1
Acenaphthylene	208-96-8	8270D	ND		72	11	ug/kg	1
Acetophenone	98-86-2	8270D	ND		72	19	ug/kg	1
Anthracene	120-12-7	8270D	ND		72	7.9	ug/kg	1
Atrazine	1912-24-9	8270D	ND		72	18	ug/kg	2
Benzaldehyde	100-52-7	8270D	ND		72	18	ug/kg	1
Benzo(a)anthracene	56-55-3	8270D	ND		72	9.4	ug/kg	1
Benzo(a)pyrene	50-32-8	8270D	ND		72	10	ug/kg	1
Benzo(b)fluoranthene	205-99-2	8270D	ND		72	10	ug/kg	1
Benzo(g,h,i)perylene	191-24-2	8270D	ND		72	12	ug/kg	1
Benzo(k)fluoranthene	207-08-9	8270D	ND		72	10	ug/kg	1
1,1'-Biphenyl	92-52-4	8270D	ND		72	11	ug/kg	1
4-Bromophenyl phenyl ether	101-55-3	8270D	ND		72	10	ug/kg	1
Butyl benzyl phthalate	85-68-7	8270D	ND		140	47	ug/kg	1
Caprolactam	105-60-2	8270D	ND		72	18	ug/kg	1
Carbazole	86-74-8	8270D	ND		72	15	ug/kg	1
4-Chloro-3-methyl phenol	59-50-7	8270D	ND		72	9.0	ug/kg	1
4-Chloroaniline	106-47-8	8270D	68	BJ	72	7.2	ug/kg	1
bis(2-Chloroethoxy)methane	111-91-1	8270D	ND		72	11	ug/kg	1
bis(2-Chloroethyl)ether	111-44-4	8270D	ND		72	9.9	ug/kg	1
bis(2-Chloroisopropyl)ether	108-60-1	8270D	ND		72	12	ug/kg	1
2-Chloronaphthalene	91-58-7	8270D	ND		72	12	ug/kg	1
2-Chlorophenol	95-57-8	8270D	ND		72	9.9	ug/kg	1
4-Chlorophenyl phenyl ether	7005-72-3	8270D	ND		72	12	ug/kg	1
Chrysene	218-01-9	8270D	ND		72	12	ug/kg	1
Dibenzo(a,h)anthracene	53-70-3	8270D	ND		72	9.7	ug/kg	1
Dibenzofuran	132-64-9	8270D	ND		72	11	ug/kg	1
3,3'-Dichlorobenzidine	91-94-1	8270D	ND		350	39	ug/kg	1
2,4-Dichlorophenol	120-83-2	8270D	ND		72	11	ug/kg	1
Diethylphthalate	84-66-2	8270D	ND		72	24	ug/kg	1
Dimethyl phthalate	131-11-3	8270D	ND		72	24	ug/kg	1
2,4-Dimethylphenol	105-67-9	8270D	ND		72	13	ug/kg	1
Di-n-butyl phthalate	84-74-2	8270D	ND		72	24	ug/kg	1
4,6-Dinitro-2-methylphenol	534-52-1	8270D	ND		350	140	ug/kg	1
2,4-Dinitrophenol	51-28-5	8270D	ND		350	120	ug/kg	1
2,4-Dinitrotoluene	121-14-2	8270D	ND		140	19	ug/kg	1
2,6-Dinitrotoluene	606-20-2	8270D	ND		140	19	ug/kg	1
Di-n-octylphthalate	117-84-0	8270D	ND		72	34	ug/kg	1
bis(2-Ethylhexyl)phthalate	117-81-7	8270D	ND		72	24	ug/kg	1
Fluoranthene	206-44-0	8270D	ND		72	11	ug/kg	1
Fluorene	86-73-7	8270D	ND		72	9.6	ug/kg	1
Hexachlorobenzene	118-74-1	8270D	ND		72	16	ug/kg	1
Hexachlorobutadiene	87-68-3	8270D	ND		72	12	ug/kg	1

PQL = Practical quantitation limit
B = Detected in the method blank
E = Quantitation of compound exceeded the calibration range
ND = Not detected at or above the MDL
J = Estimated result < PQL and ≥ MDL
P = The RPD between two GC columns exceeds 40%
Where applicable, all soil sample analysis are reported on a dry weight basis unless flagged with a "W"
N = Recovery is out of criteria
H = Out of holding time

Semivolatile Organic Compounds by GC/MS

Client: ARCADIS U.S., Inc.
Laboratory ID: ME20017-001
Description: F39SB015(0-0.5)
Matrix: Solid
Date Sampled: 05/19/2011 0915
% Solids: 91.3 05/20/2011 1618
Date Received: 05/20/2011

Run	Prep Method	Analytical Method	Dilution	Analysis Date	Analyst	Prep Date	Batch
1	3550C	8270D	1	05/27/2011 2302	JGH	05/23/2011 1751	60216
2	3550C	8270D	1	05/30/2011 2235	JGH	05/23/2011 1751	60216

Parameter	CAS Number	Analytical Method	Result	Q	PQL	MDL	Units	Run
Hexachlorocyclopentadiene	77-47-4	8270D	ND		350	26	ug/kg	1
Hexachloroethane	67-72-1	8270D	ND		72	9.5	ug/kg	1
Indeno(1,2,3-c,d)pyrene	193-39-5	8270D	ND		72	10	ug/kg	1
Isophorone	78-59-1	8270D	ND		72	7.9	ug/kg	1
2-Methylnaphthalene	91-57-6	8270D	ND		72	11	ug/kg	1
2-Methylphenol	95-48-7	8270D	ND		72	6.5	ug/kg	1
3 & 4-Methylphenol	106-44-5	8270D	ND		140	13	ug/kg	1
Naphthalene	91-20-3	8270D	ND		72	11	ug/kg	1
2-Nitroaniline	88-74-4	8270D	ND		140	24	ug/kg	1
3-Nitroaniline	99-09-2	8270D	ND		140	41	ug/kg	1
4-Nitroaniline	100-01-6	8270D	ND		140	20	ug/kg	1
Nitrobenzene	98-95-3	8270D	ND		72	5.7	ug/kg	1
2-Nitrophenol	88-75-5	8270D	ND		140	20	ug/kg	1
4-Nitrophenol	100-02-7	8270D	ND		350	100	ug/kg	1
N-Nitrosodi-n-propylamine	621-64-7	8270D	ND		72	14	ug/kg	1
N-Nitrosodiphenylamine (Diphenylamine)	86-30-6	8270D	ND		72	8.8	ug/kg	1
Pentachlorophenol	87-86-5	8270D	ND		350	150	ug/kg	1
Phenanthrene	85-01-8	8270D	ND		72	9.6	ug/kg	1
Phenol	108-95-2	8270D	ND		72	9.7	ug/kg	1
Pyrene	129-00-0	8270D	ND		72	14	ug/kg	1
2,4,5-Trichlorophenol	95-95-4	8270D	ND		72	10	ug/kg	1
2,4,6-Trichlorophenol	88-06-2	8270D	ND		72	11	ug/kg	1

Surrogate	Q	Run 1 % Recovery	Acceptance Limits	Q	Run 2 % Recovery	Acceptance Limits
2-Fluorobiphenyl		47	33-102		43	33-102
2-Fluorophenol		48	28-104		47	28-104
Nitrobenzene-d5		44	22-109		41	22-109
Phenol-d5		50	27-103		46	27-103
Terphenyl-d14		47	41-120		44	41-120
2,4,6-Tribromophenol		47	30-117		44	30-117

PQL = Practical quantitation limit
B = Detected in the method blank
E = Quantitation of compound exceeded the calibration range
ND = Not detected at or above the MDL
J = Estimated result < PQL and ≥ MDL
P = The RPD between two GC columns exceeds 40%
Where applicable, all soil sample analysis are reported on a dry weight basis unless flagged with a "W"
N = Recovery is out of criteria
H = Out of holding time

Semivolatile Organic Compounds by GC/MS

Client: ARCADIS U.S., Inc.
Laboratory ID: ME20017-002
Description: F39SB015(3-3.5)
Matrix: Solid
Date Sampled: 05/19/2011 0930
% Solids: 88.9 05/20/2011 1618
Date Received: 05/20/2011

Run	Prep Method	Analytical Method	Dilution	Analysis Date	Analyst	Prep Date	Batch
1	3550C	8270D	1	05/27/2011 2359	JGH	05/23/2011 1751	60216
2	3550C	8270D	1	05/30/2011 2333	JGH	05/23/2011 1751	60216

Parameter	CAS Number	Analytical Method	Result	Q	PQL	MDL	Units	Run
Acenaphthene	83-32-9	8270D	ND		75	12	ug/kg	1
Acenaphthylene	208-96-8	8270D	ND		75	12	ug/kg	1
Acetophenone	98-86-2	8270D	ND		75	20	ug/kg	1
Anthracene	120-12-7	8270D	ND		75	8.3	ug/kg	1
Atrazine	1912-24-9	8270D	ND		75	19	ug/kg	2
Benzaldehyde	100-52-7	8270D	ND		75	19	ug/kg	1
Benzo(a)anthracene	56-55-3	8270D	ND		75	9.9	ug/kg	1
Benzo(a)pyrene	50-32-8	8270D	ND		75	10	ug/kg	1
Benzo(b)fluoranthene	205-99-2	8270D	ND		75	11	ug/kg	1
Benzo(g,h,i)perylene	191-24-2	8270D	ND		75	13	ug/kg	1
Benzo(k)fluoranthene	207-08-9	8270D	ND		75	11	ug/kg	1
1,1'-Biphenyl	92-52-4	8270D	ND		75	11	ug/kg	1
4-Bromophenyl phenyl ether	101-55-3	8270D	ND		75	11	ug/kg	1
Butyl benzyl phthalate	85-68-7	8270D	ND		150	49	ug/kg	1
Caprolactam	105-60-2	8270D	ND		75	19	ug/kg	1
Carbazole	86-74-8	8270D	ND		75	16	ug/kg	1
4-Chloro-3-methyl phenol	59-50-7	8270D	ND		75	9.4	ug/kg	1
4-Chloroaniline	106-47-8	8270D	23	BJ	75	7.6	ug/kg	1
bis(2-Chloroethoxy)methane	111-91-1	8270D	ND		75	11	ug/kg	1
bis(2-Chloroethyl)ether	111-44-4	8270D	ND		75	10	ug/kg	1
bis(2-Chloroisopropyl)ether	108-60-1	8270D	ND		75	12	ug/kg	1
2-Chloronaphthalene	91-58-7	8270D	ND		75	12	ug/kg	1
2-Chlorophenol	95-57-8	8270D	ND		75	10	ug/kg	1
4-Chlorophenyl phenyl ether	7005-72-3	8270D	ND		75	13	ug/kg	1
Chrysene	218-01-9	8270D	ND		75	12	ug/kg	1
Dibenzo(a,h)anthracene	53-70-3	8270D	ND		75	10	ug/kg	1
Dibenzofuran	132-64-9	8270D	ND		75	12	ug/kg	1
3,3'-Dichlorobenzidine	91-94-1	8270D	ND		370	41	ug/kg	1
2,4-Dichlorophenol	120-83-2	8270D	ND		75	12	ug/kg	1
Diethylphthalate	84-66-2	8270D	ND		75	25	ug/kg	1
Dimethyl phthalate	131-11-3	8270D	ND		75	25	ug/kg	1
2,4-Dimethylphenol	105-67-9	8270D	ND		75	14	ug/kg	1
Di-n-butyl phthalate	84-74-2	8270D	ND		75	25	ug/kg	1
4,6-Dinitro-2-methylphenol	534-52-1	8270D	ND		370	140	ug/kg	1
2,4-Dinitrophenol	51-28-5	8270D	ND		370	130	ug/kg	1
2,4-Dinitrotoluene	121-14-2	8270D	ND		150	20	ug/kg	1
2,6-Dinitrotoluene	606-20-2	8270D	ND		150	19	ug/kg	1
Di-n-octylphthalate	117-84-0	8270D	ND		75	36	ug/kg	1
bis(2-Ethylhexyl)phthalate	117-81-7	8270D	ND		75	25	ug/kg	1
Fluoranthene	206-44-0	8270D	ND		75	12	ug/kg	1
Fluorene	86-73-7	8270D	ND		75	10	ug/kg	1
Hexachlorobenzene	118-74-1	8270D	ND		75	16	ug/kg	1
Hexachlorobutadiene	87-68-3	8270D	ND		75	12	ug/kg	1

PQL = Practical quantitation limit
B = Detected in the method blank
E = Quantitation of compound exceeded the calibration range
ND = Not detected at or above the MDL
J = Estimated result < PQL and ≥ MDL
P = The RPD between two GC columns exceeds 40%
Where applicable, all soil sample analysis are reported on a dry weight basis unless flagged with a "W"
N = Recovery is out of criteria
H = Out of holding time

Semivolatile Organic Compounds by GC/MS

Client: ARCADIS U.S., Inc.
Laboratory ID: ME20017-002
Description: F39SB015(3-3.5)
Matrix: Solid
Date Sampled: 05/19/2011 0930
% Solids: 88.9 05/20/2011 1618
Date Received: 05/20/2011

Run	Prep Method	Analytical Method	Dilution	Analysis Date	Analyst	Prep Date	Batch
1	3550C	8270D	1	05/27/2011 2359	JGH	05/23/2011 1751	60216
2	3550C	8270D	1	05/30/2011 2333	JGH	05/23/2011 1751	60216

Parameter	CAS Number	Analytical Method	Result	Q	PQL	MDL	Units	Run
Hexachlorocyclopentadiene	77-47-4	8270D	ND		370	28	ug/kg	1
Hexachloroethane	67-72-1	8270D	ND		75	9.9	ug/kg	1
Indeno(1,2,3-c,d)pyrene	193-39-5	8270D	ND		75	11	ug/kg	1
Isophorone	78-59-1	8270D	ND		75	8.2	ug/kg	1
2-Methylnaphthalene	91-57-6	8270D	ND		75	11	ug/kg	1
2-Methylphenol	95-48-7	8270D	ND		75	6.8	ug/kg	1
3 & 4-Methylphenol	106-44-5	8270D	ND		150	13	ug/kg	1
Naphthalene	91-20-3	8270D	ND		75	11	ug/kg	1
2-Nitroaniline	88-74-4	8270D	ND		150	26	ug/kg	1
3-Nitroaniline	99-09-2	8270D	ND		150	43	ug/kg	1
4-Nitroaniline	100-01-6	8270D	ND		150	21	ug/kg	1
Nitrobenzene	98-95-3	8270D	ND		75	6.0	ug/kg	1
2-Nitrophenol	88-75-5	8270D	ND		150	21	ug/kg	1
4-Nitrophenol	100-02-7	8270D	ND		370	110	ug/kg	1
N-Nitrosodi-n-propylamine	621-64-7	8270D	ND		75	14	ug/kg	1
N-Nitrosodiphenylamine (Diphenylamine)	86-30-6	8270D	ND		75	9.3	ug/kg	1
Pentachlorophenol	87-86-5	8270D	ND		370	150	ug/kg	1
Phenanthrene	85-01-8	8270D	ND		75	10	ug/kg	1
Phenol	108-95-2	8270D	ND		75	10	ug/kg	1
Pyrene	129-00-0	8270D	ND		75	15	ug/kg	1
2,4,5-Trichlorophenol	95-95-4	8270D	ND		75	10	ug/kg	1
2,4,6-Trichlorophenol	88-06-2	8270D	ND		75	11	ug/kg	1

Surrogate	Q	Run 1 % Recovery	Acceptance Limits	Q	Run 2 % Recovery	Acceptance Limits
2-Fluorobiphenyl		38	33-102		34	33-102
2-Fluorophenol		37	28-104		34	28-104
Nitrobenzene-d5		32	22-109		27	22-109
Phenol-d5		41	27-103		34	27-103
Terphenyl-d14		45	41-120		42	41-120
2,4,6-Tribromophenol		49	30-117		45	30-117

PQL = Practical quantitation limit
B = Detected in the method blank
E = Quantitation of compound exceeded the calibration range
ND = Not detected at or above the MDL
J = Estimated result < PQL and ≥ MDL
P = The RPD between two GC columns exceeds 40%
Where applicable, all soil sample analysis are reported on a dry weight basis unless flagged with a "W"
N = Recovery is out of criteria
H = Out of holding time

Semivolatile Organic Compounds by GC/MS

Client: ARCADIS U.S., Inc.
Laboratory ID: ME20017-003
Description: F39SB016(0-0.5)
Matrix: Solid
Date Sampled: 05/19/2011 1000
% Solids: 93.2 05/20/2011 1618
Date Received: 05/20/2011

Run	Prep Method	Analytical Method	Dilution	Analysis Date	Analyst	Prep Date	Batch
1	3550C	8270D	1	05/28/2011 0019	JGH	05/23/2011 1751	60216
2	3550C	8270D	1	06/03/2011 1524	WD	05/23/2011 1751	60216

Parameter	CAS Number	Analytical Method	Result	Q	PQL	MDL	Units	Run
Acenaphthene	83-32-9	8270D	ND		71	11	ug/kg	1
Acenaphthylene	208-96-8	8270D	ND		71	11	ug/kg	1
Acetophenone	98-86-2	8270D	ND		71	19	ug/kg	1
Anthracene	120-12-7	8270D	ND		71	7.8	ug/kg	1
Atrazine	1912-24-9	8270D	ND		71	18	ug/kg	2
Benzaldehyde	100-52-7	8270D	ND		71	18	ug/kg	1
Benzo(a)anthracene	56-55-3	8270D	ND		71	9.3	ug/kg	1
Benzo(a)pyrene	50-32-8	8270D	11	J	71	9.8	ug/kg	1
Benzo(b)fluoranthene	205-99-2	8270D	15	J	71	10	ug/kg	1
Benzo(g,h,i)perylene	191-24-2	8270D	ND		71	12	ug/kg	1
Benzo(k)fluoranthene	207-08-9	8270D	ND		71	10	ug/kg	1
1,1'-Biphenyl	92-52-4	8270D	ND		71	11	ug/kg	1
4-Bromophenyl phenyl ether	101-55-3	8270D	ND		71	10	ug/kg	1
Butyl benzyl phthalate	85-68-7	8270D	ND		140	46	ug/kg	1
Caprolactam	105-60-2	8270D	ND		71	18	ug/kg	1
Carbazole	86-74-8	8270D	ND		71	15	ug/kg	1
4-Chloro-3-methyl phenol	59-50-7	8270D	ND		71	8.9	ug/kg	1
4-Chloroaniline	106-47-8	8270D	15	BJ	71	7.1	ug/kg	1
bis(2-Chloroethoxy)methane	111-91-1	8270D	ND		71	11	ug/kg	1
bis(2-Chloroethyl)ether	111-44-4	8270D	ND		71	9.7	ug/kg	1
bis(2-Chloroisopropyl)ether	108-60-1	8270D	ND		71	12	ug/kg	1
2-Chloronaphthalene	91-58-7	8270D	ND		71	12	ug/kg	1
2-Chlorophenol	95-57-8	8270D	ND		71	9.7	ug/kg	1
4-Chlorophenyl phenyl ether	7005-72-3	8270D	ND		71	12	ug/kg	1
Chrysene	218-01-9	8270D	ND		71	12	ug/kg	1
Dibenzo(a,h)anthracene	53-70-3	8270D	ND		71	9.6	ug/kg	1
Dibenzofuran	132-64-9	8270D	ND		71	11	ug/kg	1
3,3'-Dichlorobenzidine	91-94-1	8270D	ND		350	38	ug/kg	1
2,4-Dichlorophenol	120-83-2	8270D	ND		71	11	ug/kg	1
Diethylphthalate	84-66-2	8270D	ND		71	23	ug/kg	1
Dimethyl phthalate	131-11-3	8270D	ND		71	23	ug/kg	1
2,4-Dimethylphenol	105-67-9	8270D	ND		71	13	ug/kg	1
Di-n-butyl phthalate	84-74-2	8270D	ND		71	23	ug/kg	1
4,6-Dinitro-2-methylphenol	534-52-1	8270D	ND		350	140	ug/kg	1
2,4-Dinitrophenol	51-28-5	8270D	ND		350	120	ug/kg	1
2,4-Dinitrotoluene	121-14-2	8270D	ND		140	19	ug/kg	1
2,6-Dinitrotoluene	606-20-2	8270D	ND		140	18	ug/kg	1
Di-n-octylphthalate	117-84-0	8270D	ND		71	34	ug/kg	1
bis(2-Ethylhexyl)phthalate	117-81-7	8270D	ND		71	23	ug/kg	1
Fluoranthene	206-44-0	8270D	13	J	71	11	ug/kg	1
Fluorene	86-73-7	8270D	ND		71	9.5	ug/kg	1
Hexachlorobenzene	118-74-1	8270D	ND		71	15	ug/kg	1
Hexachlorobutadiene	87-68-3	8270D	ND		71	12	ug/kg	1

PQL = Practical quantitation limit
B = Detected in the method blank
E = Quantitation of compound exceeded the calibration range
ND = Not detected at or above the MDL
J = Estimated result < PQL and ≥ MDL
P = The RPD between two GC columns exceeds 40%
Where applicable, all soil sample analysis are reported on a dry weight basis unless flagged with a "W"
N = Recovery is out of criteria
H = Out of holding time

Semivolatile Organic Compounds by GC/MS

Client: ARCADIS U.S., Inc.
Laboratory ID: ME20017-003
Description: F39SB016(0-0.5)
Matrix: Solid
Date Sampled: 05/19/2011 1000
% Solids: 93.2 05/20/2011 1618
Date Received: 05/20/2011

Run	Prep Method	Analytical Method	Dilution	Analysis Date	Analyst	Prep Date	Batch
1	3550C	8270D	1	05/28/2011 0019	JGH	05/23/2011 1751	60216
2	3550C	8270D	1	06/03/2011 1524	WD	05/23/2011 1751	60216

Parameter	CAS Number	Analytical Method	Result	Q	PQL	MDL	Units	Run
Hexachlorocyclopentadiene	77-47-4	8270D	ND		350	26	ug/kg	1
Hexachloroethane	67-72-1	8270D	ND		71	9.3	ug/kg	1
Indeno(1,2,3-c,d)pyrene	193-39-5	8270D	ND		71	10	ug/kg	1
Isophorone	78-59-1	8270D	ND		71	7.8	ug/kg	1
2-Methylnaphthalene	91-57-6	8270D	ND		71	10	ug/kg	1
2-Methylphenol	95-48-7	8270D	ND		71	6.4	ug/kg	1
3 & 4-Methylphenol	106-44-5	8270D	ND		140	13	ug/kg	1
Naphthalene	91-20-3	8270D	ND		71	11	ug/kg	1
2-Nitroaniline	88-74-4	8270D	ND		140	24	ug/kg	1
3-Nitroaniline	99-09-2	8270D	ND		140	41	ug/kg	1
4-Nitroaniline	100-01-6	8270D	ND		140	20	ug/kg	1
Nitrobenzene	98-95-3	8270D	ND		71	5.7	ug/kg	1
2-Nitrophenol	88-75-5	8270D	ND		140	19	ug/kg	1
4-Nitrophenol	100-02-7	8270D	ND		350	100	ug/kg	1
N-Nitrosodi-n-propylamine	621-64-7	8270D	ND		71	13	ug/kg	1
N-Nitrosodiphenylamine (Diphenylamine)	86-30-6	8270D	ND		71	8.7	ug/kg	1
Pentachlorophenol	87-86-5	8270D	ND		350	150	ug/kg	1
Phenanthrene	85-01-8	8270D	ND		71	9.5	ug/kg	1
Phenol	108-95-2	8270D	ND		71	9.5	ug/kg	1
Pyrene	129-00-0	8270D	19	J	71	14	ug/kg	1
2,4,5-Trichlorophenol	95-95-4	8270D	ND		71	9.8	ug/kg	1
2,4,6-Trichlorophenol	88-06-2	8270D	ND		71	10	ug/kg	1

Surrogate	Q	Run 1 % Recovery	Acceptance Limits	Q	Run 2 % Recovery	Acceptance Limits
2-Fluorobiphenyl		48	33-102		47	33-102
2-Fluorophenol		54	28-104		49	28-104
Nitrobenzene-d5		48	22-109		44	22-109
Phenol-d5		53	27-103		49	27-103
Terphenyl-d14		45	41-120		47	41-120
2,4,6-Tribromophenol		50	30-117		55	30-117

PQL = Practical quantitation limit
B = Detected in the method blank
E = Quantitation of compound exceeded the calibration range
ND = Not detected at or above the MDL
J = Estimated result < PQL and ≥ MDL
P = The RPD between two GC columns exceeds 40%
Where applicable, all soil sample analysis are reported on a dry weight basis unless flagged with a "W"
N = Recovery is out of criteria
H = Out of holding time

Semivolatile Organic Compounds by GC/MS

Client: ARCADIS U.S., Inc.
Laboratory ID: ME20017-004
Description: F39SB016(3-3.5)
Matrix: Solid
Date Sampled: 05/19/2011 1005
% Solids: 92.2 05/20/2011 1618
Date Received: 05/20/2011

Run	Prep Method	Analytical Method	Dilution	Analysis Date	Analyst	Prep Date	Batch
1	3550C	8270D	1	05/28/2011 0038	JGH	05/23/2011 1751	60216
2	3550C	8270D	1	06/03/2011 1620	WD	05/23/2011 1751	60216

Parameter	CAS Number	Analytical Method	Result	Q	PQL	MDL	Units	Run
Acenaphthene	83-32-9	8270D	ND		71	11	ug/kg	1
Acenaphthylene	208-96-8	8270D	ND		71	11	ug/kg	1
Acetophenone	98-86-2	8270D	ND		71	19	ug/kg	1
Anthracene	120-12-7	8270D	ND		71	7.8	ug/kg	1
Atrazine	1912-24-9	8270D	ND		71	18	ug/kg	2
Benzaldehyde	100-52-7	8270D	ND		71	18	ug/kg	1
Benzo(a)anthracene	56-55-3	8270D	ND		71	9.3	ug/kg	1
Benzo(a)pyrene	50-32-8	8270D	ND		71	9.9	ug/kg	1
Benzo(b)fluoranthene	205-99-2	8270D	ND		71	10	ug/kg	1
Benzo(g,h,i)perylene	191-24-2	8270D	ND		71	12	ug/kg	1
Benzo(k)fluoranthene	207-08-9	8270D	ND		71	10	ug/kg	1
1,1'-Biphenyl	92-52-4	8270D	ND		71	11	ug/kg	1
4-Bromophenyl phenyl ether	101-55-3	8270D	ND		71	10	ug/kg	1
Butyl benzyl phthalate	85-68-7	8270D	ND		140	47	ug/kg	1
Caprolactam	105-60-2	8270D	ND		71	18	ug/kg	1
Carbazole	86-74-8	8270D	ND		71	15	ug/kg	1
4-Chloro-3-methyl phenol	59-50-7	8270D	ND		71	8.9	ug/kg	1
4-Chloroaniline	106-47-8	8270D	ND		71	7.2	ug/kg	1
bis(2-Chloroethoxy)methane	111-91-1	8270D	ND		71	11	ug/kg	1
bis(2-Chloroethyl)ether	111-44-4	8270D	ND		71	9.8	ug/kg	1
bis(2-Chloroisopropyl)ether	108-60-1	8270D	ND		71	12	ug/kg	1
2-Chloronaphthalene	91-58-7	8270D	ND		71	12	ug/kg	1
2-Chlorophenol	95-57-8	8270D	ND		71	9.8	ug/kg	1
4-Chlorophenyl phenyl ether	7005-72-3	8270D	ND		71	12	ug/kg	1
Chrysene	218-01-9	8270D	ND		71	12	ug/kg	1
Dibenzo(a,h)anthracene	53-70-3	8270D	ND		71	9.6	ug/kg	1
Dibenzofuran	132-64-9	8270D	ND		71	11	ug/kg	1
3,3'-Dichlorobenzidine	91-94-1	8270D	ND		350	38	ug/kg	1
2,4-Dichlorophenol	120-83-2	8270D	ND		71	11	ug/kg	1
Diethylphthalate	84-66-2	8270D	ND		71	23	ug/kg	1
Dimethyl phthalate	131-11-3	8270D	ND		71	23	ug/kg	1
2,4-Dimethylphenol	105-67-9	8270D	ND		71	13	ug/kg	1
Di-n-butyl phthalate	84-74-2	8270D	ND		71	23	ug/kg	1
4,6-Dinitro-2-methylphenol	534-52-1	8270D	ND		350	140	ug/kg	1
2,4-Dinitrophenol	51-28-5	8270D	ND		350	120	ug/kg	1
2,4-Dinitrotoluene	121-14-2	8270D	ND		140	19	ug/kg	1
2,6-Dinitrotoluene	606-20-2	8270D	ND		140	18	ug/kg	1
Di-n-octylphthalate	117-84-0	8270D	ND		71	34	ug/kg	1
bis(2-Ethylhexyl)phthalate	117-81-7	8270D	ND		71	23	ug/kg	1
Fluoranthene	206-44-0	8270D	ND		71	11	ug/kg	1
Fluorene	86-73-7	8270D	ND		71	9.5	ug/kg	1
Hexachlorobenzene	118-74-1	8270D	ND		71	16	ug/kg	1
Hexachlorobutadiene	87-68-3	8270D	ND		71	12	ug/kg	1

PQL = Practical quantitation limit
B = Detected in the method blank
E = Quantitation of compound exceeded the calibration range
ND = Not detected at or above the MDL
J = Estimated result < PQL and ≥ MDL
P = The RPD between two GC columns exceeds 40%
Where applicable, all soil sample analysis are reported on a dry weight basis unless flagged with a "W"
N = Recovery is out of criteria
H = Out of holding time

Semivolatile Organic Compounds by GC/MS

Client: ARCADIS U.S., Inc.
Laboratory ID: ME20017-004
Description: F39SB016(3-3.5)
Matrix: Solid
Date Sampled: 05/19/2011 1005
% Solids: 92.2 05/20/2011 1618
Date Received: 05/20/2011

Run	Prep Method	Analytical Method	Dilution	Analysis Date	Analyst	Prep Date	Batch
1	3550C	8270D	1	05/28/2011 0038	JGH	05/23/2011 1751	60216
2	3550C	8270D	1	06/03/2011 1620	WD	05/23/2011 1751	60216

Parameter	CAS Number	Analytical Method	Result	Q	PQL	MDL	Units	Run
Hexachlorocyclopentadiene	77-47-4	8270D	ND		350	26	ug/kg	1
Hexachloroethane	67-72-1	8270D	ND		71	9.4	ug/kg	1
Indeno(1,2,3-c,d)pyrene	193-39-5	8270D	ND		71	10	ug/kg	1
Isophorone	78-59-1	8270D	ND		71	7.8	ug/kg	1
2-Methylnaphthalene	91-57-6	8270D	ND		71	11	ug/kg	1
2-Methylphenol	95-48-7	8270D	ND		71	6.4	ug/kg	1
3 & 4-Methylphenol	106-44-5	8270D	ND		140	13	ug/kg	1
Naphthalene	91-20-3	8270D	ND		71	11	ug/kg	1
2-Nitroaniline	88-74-4	8270D	ND		140	24	ug/kg	1
3-Nitroaniline	99-09-2	8270D	ND		140	41	ug/kg	1
4-Nitroaniline	100-01-6	8270D	ND		140	20	ug/kg	1
Nitrobenzene	98-95-3	8270D	ND		71	5.7	ug/kg	1
2-Nitrophenol	88-75-5	8270D	ND		140	19	ug/kg	1
4-Nitrophenol	100-02-7	8270D	ND		350	100	ug/kg	1
N-Nitrosodi-n-propylamine	621-64-7	8270D	ND		71	14	ug/kg	1
N-Nitrosodiphenylamine (Diphenylamine)	86-30-6	8270D	ND		71	8.7	ug/kg	1
Pentachlorophenol	87-86-5	8270D	ND		350	150	ug/kg	1
Phenanthrene	85-01-8	8270D	ND		71	9.5	ug/kg	1
Phenol	108-95-2	8270D	ND		71	9.6	ug/kg	1
Pyrene	129-00-0	8270D	ND		71	14	ug/kg	1
2,4,5-Trichlorophenol	95-95-4	8270D	ND		71	9.9	ug/kg	1
2,4,6-Trichlorophenol	88-06-2	8270D	ND		71	10	ug/kg	1

Surrogate	Q	Run 1 % Recovery	Acceptance Limits	Q	Run 2 % Recovery	Acceptance Limits
2-Fluorobiphenyl		48	33-102		44	33-102
2-Fluorophenol		45	28-104		41	28-104
Nitrobenzene-d5		40	22-109		37	22-109
Phenol-d5		49	27-103		45	27-103
Terphenyl-d14		44	41-120		47	41-120
2,4,6-Tribromophenol		53	30-117		53	30-117

PQL = Practical quantitation limit
B = Detected in the method blank
E = Quantitation of compound exceeded the calibration range
ND = Not detected at or above the MDL
J = Estimated result < PQL and ≥ MDL
P = The RPD between two GC columns exceeds 40%
Where applicable, all soil sample analysis are reported on a dry weight basis unless flagged with a "W"
N = Recovery is out of criteria
H = Out of holding time

Semivolatile Organic Compounds by GC/MS

Client: ARCADIS U.S., Inc.
Laboratory ID: ME20017-005
Description: F39SB017(0-0.5)
Matrix: Solid
Date Sampled: 05/19/2011 1020
% Solids: 92.5 05/20/2011 1618
Date Received: 05/20/2011

Run	Prep Method	Analytical Method	Dilution	Analysis Date	Analyst	Prep Date	Batch
1	3550C	8270D	1	06/06/2011 1949	JGH	06/02/2011 1717	60960

Parameter	CAS Number	Analytical Method	Result	Q	PQL	MDL	Units	Run
Acenaphthene	83-32-9	8270D	ND		70	11	ug/kg	1
Acenaphthylene	208-96-8	8270D	66	J	70	11	ug/kg	1
Acetophenone	98-86-2	8270D	ND		70	19	ug/kg	1
Anthracene	120-12-7	8270D	31	J	70	7.7	ug/kg	1
Atrazine	1912-24-9	8270D	ND		70	18	ug/kg	1
Benzaldehyde	100-52-7	8270D	ND		70	18	ug/kg	1
Benzo(a)anthracene	56-55-3	8270D	70		70	9.2	ug/kg	1
Benzo(a)pyrene	50-32-8	8270D	91		70	9.8	ug/kg	1
Benzo(b)fluoranthene	205-99-2	8270D	140		70	10	ug/kg	1
Benzo(g,h,i)perylene	191-24-2	8270D	89		70	12	ug/kg	1
Benzo(k)fluoranthene	207-08-9	8270D	50	J	70	9.9	ug/kg	1
1,1'-Biphenyl	92-52-4	8270D	12	J	70	10	ug/kg	1
4-Bromophenyl phenyl ether	101-55-3	8270D	ND		70	10	ug/kg	1
Butyl benzyl phthalate	85-68-7	8270D	ND		140	46	ug/kg	1
Caprolactam	105-60-2	8270D	ND		70	18	ug/kg	1
Carbazole	86-74-8	8270D	ND		70	15	ug/kg	1
4-Chloro-3-methyl phenol	59-50-7	8270D	ND		70	8.8	ug/kg	1
4-Chloroaniline	106-47-8	8270D	ND		70	7.1	ug/kg	1
bis(2-Chloroethoxy)methane	111-91-1	8270D	ND		70	11	ug/kg	1
bis(2-Chloroethyl)ether	111-44-4	8270D	ND		70	9.6	ug/kg	1
bis(2-Chloroisopropyl)ether	108-60-1	8270D	ND		70	12	ug/kg	1
2-Chloronaphthalene	91-58-7	8270D	ND		70	11	ug/kg	1
2-Chlorophenol	95-57-8	8270D	ND		70	9.6	ug/kg	1
4-Chlorophenyl phenyl ether	7005-72-3	8270D	ND		70	12	ug/kg	1
Chrysene	218-01-9	8270D	100		70	12	ug/kg	1
Dibenzo(a,h)anthracene	53-70-3	8270D	19	J	70	9.5	ug/kg	1
Dibenzofuran	132-64-9	8270D	ND		70	11	ug/kg	1
3,3'-Dichlorobenzidine	91-94-1	8270D	ND		350	38	ug/kg	1
2,4-Dichlorophenol	120-83-2	8270D	ND		70	11	ug/kg	1
Diethylphthalate	84-66-2	8270D	ND		70	23	ug/kg	1
Dimethyl phthalate	131-11-3	8270D	ND		70	23	ug/kg	1
2,4-Dimethylphenol	105-67-9	8270D	ND		70	13	ug/kg	1
Di-n-butyl phthalate	84-74-2	8270D	ND		70	23	ug/kg	1
4,6-Dinitro-2-methylphenol	534-52-1	8270D	ND		350	140	ug/kg	1
2,4-Dinitrophenol	51-28-5	8270D	ND		350	120	ug/kg	1
2,4-Dinitrotoluene	121-14-2	8270D	ND		140	19	ug/kg	1
2,6-Dinitrotoluene	606-20-2	8270D	ND		140	18	ug/kg	1
Di-n-octylphthalate	117-84-0	8270D	ND		70	33	ug/kg	1
bis(2-Ethylhexyl)phthalate	117-81-7	8270D	ND		70	23	ug/kg	1
Fluoranthene	206-44-0	8270D	120		70	11	ug/kg	1
Fluorene	86-73-7	8270D	ND		70	9.4	ug/kg	1
Hexachlorobenzene	118-74-1	8270D	ND		70	15	ug/kg	1
Hexachlorobutadiene	87-68-3	8270D	ND		70	11	ug/kg	1
Hexachlorocyclopentadiene	77-47-4	8270D	ND		350	26	ug/kg	1

PQL = Practical quantitation limit
B = Detected in the method blank
E = Quantitation of compound exceeded the calibration range
ND = Not detected at or above the MDL
J = Estimated result < PQL and ≥ MDL
P = The RPD between two GC columns exceeds 40%
Where applicable, all soil sample analysis are reported on a dry weight basis unless flagged with a "W"
N = Recovery is out of criteria
H = Out of holding time

Semivolatile Organic Compounds by GC/MS

Client: ARCADIS U.S., Inc.
Laboratory ID: ME20017-005
Description: F39SB017(0-0.5)
Matrix: Solid
Date Sampled: 05/19/2011 1020
% Solids: 92.5 05/20/2011 1618
Date Received: 05/20/2011

Run	Prep Method	Analytical Method	Dilution	Analysis Date	Analyst	Prep Date	Batch
1	3550C	8270D	1	06/06/2011 1949	JGH	06/02/2011 1717	60960

Parameter	CAS Number	Analytical Method	Result	Q	PQL	MDL	Units	Run
Hexachloroethane	67-72-1	8270D	ND		70	9.3	ug/kg	1
Indeno(1,2,3-c,d)pyrene	193-39-5	8270D	62	J	70	10	ug/kg	1
Isophorone	78-59-1	8270D	ND		70	7.7	ug/kg	1
2-Methylnaphthalene	91-57-6	8270D	15	J	70	10	ug/kg	1
2-Methylphenol	95-48-7	8270D	ND		70	6.3	ug/kg	1
3 & 4-Methylphenol	106-44-5	8270D	ND		140	12	ug/kg	1
Naphthalene	91-20-3	8270D	ND		70	11	ug/kg	1
2-Nitroaniline	88-74-4	8270D	ND		140	24	ug/kg	1
3-Nitroaniline	99-09-2	8270D	ND		140	40	ug/kg	1
4-Nitroaniline	100-01-6	8270D	ND		140	20	ug/kg	1
Nitrobenzene	98-95-3	8270D	ND		70	5.6	ug/kg	1
2-Nitrophenol	88-75-5	8270D	ND		140	19	ug/kg	1
4-Nitrophenol	100-02-7	8270D	ND		350	100	ug/kg	1
N-Nitrosodi-n-propylamine	621-64-7	8270D	ND		70	13	ug/kg	1
N-Nitrosodiphenylamine (Diphenylamine)	86-30-6	8270D	ND		70	8.6	ug/kg	1
Pentachlorophenol	87-86-5	8270D	ND		350	140	ug/kg	1
Phenanthrene	85-01-8	8270D	52	J	70	9.4	ug/kg	1
Phenol	108-95-2	8270D	ND		70	9.5	ug/kg	1
Pyrene	129-00-0	8270D	140		70	14	ug/kg	1
2,4,5-Trichlorophenol	95-95-4	8270D	ND		70	9.8	ug/kg	1
2,4,6-Trichlorophenol	88-06-2	8270D	ND		70	10	ug/kg	1

Surrogate	Q	Run 1 % Recovery	Acceptance Limits
2-Fluorobiphenyl		56	33-102
2-Fluorophenol		76	28-104
Nitrobenzene-d5		50	22-109
Phenol-d5		66	27-103
Terphenyl-d14		72	41-120
2,4,6-Tribromophenol		66	30-117

PQL = Practical quantitation limit
B = Detected in the method blank
E = Quantitation of compound exceeded the calibration range
ND = Not detected at or above the MDL
J = Estimated result < PQL and ≥ MDL
P = The RPD between two GC columns exceeds 40%
Where applicable, all soil sample analysis are reported on a dry weight basis unless flagged with a "W"
N = Recovery is out of criteria
H = Out of holding time

Semivolatile Organic Compounds by GC/MS

Client: ARCADIS U.S., Inc.
Laboratory ID: ME20017-006
Description: F39SB017(3-3.5)
Matrix: Solid
Date Sampled: 05/19/2011 1026
% Solids: 90.3 05/20/2011 1618
Date Received: 05/20/2011

Run	Prep Method	Analytical Method	Dilution	Analysis Date	Analyst	Prep Date	Batch
1	3550C	8270D	1	06/06/2011 2049	JGH	06/02/2011 1717	60960

Parameter	CAS Number	Analytical Method	Result	Q	PQL	MDL	Units	Run
Acenaphthene	83-32-9	8270D	ND		72	11	ug/kg	1
Acenaphthylene	208-96-8	8270D	200		72	11	ug/kg	1
Acetophenone	98-86-2	8270D	ND		72	19	ug/kg	1
Anthracene	120-12-7	8270D	69	J	72	7.9	ug/kg	1
Atrazine	1912-24-9	8270D	ND		72	18	ug/kg	1
Benzaldehyde	100-52-7	8270D	ND		72	18	ug/kg	1
Benzo(a)anthracene	56-55-3	8270D	320		72	9.4	ug/kg	1
Benzo(a)pyrene	50-32-8	8270D	430		72	10	ug/kg	1
Benzo(b)fluoranthene	205-99-2	8270D	480		72	10	ug/kg	1
Benzo(g,h,i)perylene	191-24-2	8270D	200		72	12	ug/kg	1
Benzo(k)fluoranthene	207-08-9	8270D	250		72	10	ug/kg	1
1,1'-Biphenyl	92-52-4	8270D	ND		72	11	ug/kg	1
4-Bromophenyl phenyl ether	101-55-3	8270D	ND		72	10	ug/kg	1
Butyl benzyl phthalate	85-68-7	8270D	ND		140	47	ug/kg	1
Caprolactam	105-60-2	8270D	ND		72	18	ug/kg	1
Carbazole	86-74-8	8270D	ND		72	15	ug/kg	1
4-Chloro-3-methyl phenol	59-50-7	8270D	ND		72	9.0	ug/kg	1
4-Chloroaniline	106-47-8	8270D	ND		72	7.2	ug/kg	1
bis(2-Chloroethoxy)methane	111-91-1	8270D	ND		72	11	ug/kg	1
bis(2-Chloroethyl)ether	111-44-4	8270D	ND		72	9.8	ug/kg	1
bis(2-Chloroisopropyl)ether	108-60-1	8270D	ND		72	12	ug/kg	1
2-Chloronaphthalene	91-58-7	8270D	ND		72	12	ug/kg	1
2-Chlorophenol	95-57-8	8270D	ND		72	9.8	ug/kg	1
4-Chlorophenyl phenyl ether	7005-72-3	8270D	ND		72	12	ug/kg	1
Chrysene	218-01-9	8270D	410		72	12	ug/kg	1
Dibenzo(a,h)anthracene	53-70-3	8270D	50	J	72	9.7	ug/kg	1
Dibenzofuran	132-64-9	8270D	ND		72	11	ug/kg	1
3,3'-Dichlorobenzidine	91-94-1	8270D	ND		350	39	ug/kg	1
2,4-Dichlorophenol	120-83-2	8270D	ND		72	11	ug/kg	1
Diethylphthalate	84-66-2	8270D	ND		72	23	ug/kg	1
Dimethyl phthalate	131-11-3	8270D	ND		72	23	ug/kg	1
2,4-Dimethylphenol	105-67-9	8270D	ND		72	13	ug/kg	1
Di-n-butyl phthalate	84-74-2	8270D	ND		72	23	ug/kg	1
4,6-Dinitro-2-methylphenol	534-52-1	8270D	ND		350	140	ug/kg	1
2,4-Dinitrophenol	51-28-5	8270D	ND		350	120	ug/kg	1
2,4-Dinitrotoluene	121-14-2	8270D	ND		140	19	ug/kg	1
2,6-Dinitrotoluene	606-20-2	8270D	ND		140	18	ug/kg	1
Di-n-octylphthalate	117-84-0	8270D	ND		72	34	ug/kg	1
bis(2-Ethylhexyl)phthalate	117-81-7	8270D	ND		72	23	ug/kg	1
Fluoranthene	206-44-0	8270D	130		72	11	ug/kg	1
Fluorene	86-73-7	8270D	ND		72	9.6	ug/kg	1
Hexachlorobenzene	118-74-1	8270D	ND		72	16	ug/kg	1
Hexachlorobutadiene	87-68-3	8270D	ND		72	12	ug/kg	1
Hexachlorocyclopentadiene	77-47-4	8270D	ND		350	26	ug/kg	1

PQL = Practical quantitation limit
B = Detected in the method blank
E = Quantitation of compound exceeded the calibration range
ND = Not detected at or above the MDL
J = Estimated result < PQL and ≥ MDL
P = The RPD between two GC columns exceeds 40%
Where applicable, all soil sample analysis are reported on a dry weight basis unless flagged with a "W"
N = Recovery is out of criteria
H = Out of holding time

Semivolatile Organic Compounds by GC/MS

Client: ARCADIS U.S., Inc.
Laboratory ID: ME20017-006
Description: F39SB017(3-3.5)
Matrix: Solid
Date Sampled: 05/19/2011 1026
% Solids: 90.3 05/20/2011 1618
Date Received: 05/20/2011

Run	Prep Method	Analytical Method	Dilution	Analysis Date	Analyst	Prep Date	Batch
1	3550C	8270D	1	06/06/2011 2049	JGH	06/02/2011 1717	60960

Parameter	CAS Number	Analytical Method	Result	Q	PQL	MDL	Units	Run
Hexachloroethane	67-72-1	8270D	ND		72	9.5	ug/kg	1
Indeno(1,2,3-c,d)pyrene	193-39-5	8270D	160		72	10	ug/kg	1
Isophorone	78-59-1	8270D	ND		72	7.9	ug/kg	1
2-Methylnaphthalene	91-57-6	8270D	18	J	72	11	ug/kg	1
2-Methylphenol	95-48-7	8270D	ND		72	6.4	ug/kg	1
3 & 4-Methylphenol	106-44-5	8270D	ND		140	13	ug/kg	1
Naphthalene	91-20-3	8270D	11	J	72	11	ug/kg	1
2-Nitroaniline	88-74-4	8270D	ND		140	24	ug/kg	1
3-Nitroaniline	99-09-2	8270D	ND		140	41	ug/kg	1
4-Nitroaniline	100-01-6	8270D	ND		140	20	ug/kg	1
Nitrobenzene	98-95-3	8270D	ND		72	5.7	ug/kg	1
2-Nitrophenol	88-75-5	8270D	ND		140	20	ug/kg	1
4-Nitrophenol	100-02-7	8270D	ND		350	100	ug/kg	1
N-Nitrosodi-n-propylamine	621-64-7	8270D	ND		72	14	ug/kg	1
N-Nitrosodiphenylamine (Diphenylamine)	86-30-6	8270D	ND		72	8.8	ug/kg	1
Pentachlorophenol	87-86-5	8270D	ND		350	150	ug/kg	1
Phenanthrene	85-01-8	8270D	31	J	72	9.6	ug/kg	1
Phenol	108-95-2	8270D	ND		72	9.7	ug/kg	1
Pyrene	129-00-0	8270D	260		72	14	ug/kg	1
2,4,5-Trichlorophenol	95-95-4	8270D	ND		72	10	ug/kg	1
2,4,6-Trichlorophenol	88-06-2	8270D	ND		72	11	ug/kg	1

Surrogate	Q	Run 1 % Recovery	Acceptance Limits
2-Fluorobiphenyl		62	33-102
2-Fluorophenol		83	28-104
Nitrobenzene-d5		56	22-109
Phenol-d5		71	27-103
Terphenyl-d14		66	41-120
2,4,6-Tribromophenol		70	30-117

PQL = Practical quantitation limit
B = Detected in the method blank
E = Quantitation of compound exceeded the calibration range
ND = Not detected at or above the MDL
J = Estimated result < PQL and ≥ MDL
P = The RPD between two GC columns exceeds 40%
Where applicable, all soil sample analysis are reported on a dry weight basis unless flagged with a "W"
N = Recovery is out of criteria
H = Out of holding time

QC Summary

Semivolatile Organic Compounds by GC/MS - MB

Sample ID: MQ60216-001
Batch: 60216
Analytical Method: 8270D

Matrix: Solid
Prep Method: 3550C
Prep Date: 05/23/2011 1751

Parameter	Result	Q	Dil	PQL	MDL	Units	Analysis Date
1,1'-Biphenyl	ND		1	67	10	ug/kg	05/27/2011 2145
2,4,5-Trichlorophenol	ND		1	67	9.3	ug/kg	05/27/2011 2145
2,4,6-Trichlorophenol	ND		1	67	9.8	ug/kg	05/27/2011 2145
2,4-Dichlorophenol	ND		1	67	10	ug/kg	05/27/2011 2145
2,4-Dimethylphenol	ND		1	67	12	ug/kg	05/27/2011 2145
2,4-Dinitrophenol	ND		1	330	110	ug/kg	05/27/2011 2145
2,4-Dinitrotoluene	ND		1	130	18	ug/kg	05/27/2011 2145
2,6-Dinitrotoluene	ND		1	130	17	ug/kg	05/27/2011 2145
2-Chloronaphthalene	ND		1	67	11	ug/kg	05/27/2011 2145
2-Chlorophenol	ND		1	67	9.2	ug/kg	05/27/2011 2145
2-Methylnaphthalene	ND		1	67	9.9	ug/kg	05/27/2011 2145
2-Methylphenol	ND		1	67	6.0	ug/kg	05/27/2011 2145
2-Nitroaniline	ND		1	130	23	ug/kg	05/27/2011 2145
2-Nitrophenol	ND		1	130	18	ug/kg	05/27/2011 2145
3 & 4-Methylphenol	ND		1	130	12	ug/kg	05/27/2011 2145
3,3'-Dichlorobenzidine	ND		1	330	36	ug/kg	05/27/2011 2145
3-Nitroaniline	ND		1	130	39	ug/kg	05/27/2011 2145
4,6-Dinitro-2-methylphenol	ND		1	330	130	ug/kg	05/27/2011 2145
4-Bromophenyl phenyl ether	ND		1	67	9.8	ug/kg	05/27/2011 2145
4-Chloro-3-methyl phenol	ND		1	67	8.4	ug/kg	05/27/2011 2145
4-Chloroaniline	140		1	67	6.8	ug/kg	05/27/2011 2145
4-Chlorophenyl phenyl ether	ND		1	67	11	ug/kg	05/27/2011 2145
4-Nitroaniline	ND		1	130	19	ug/kg	05/27/2011 2145
4-Nitrophenol	ND		1	330	96	ug/kg	05/27/2011 2145
Acenaphthene	ND		1	67	11	ug/kg	05/27/2011 2145
Acenaphthylene	ND		1	67	10	ug/kg	05/27/2011 2145
Acetophenone	ND		1	67	18	ug/kg	05/27/2011 2145
Anthracene	ND		1	67	7.4	ug/kg	05/27/2011 2145
Atrazine	ND		1	67	17	ug/kg	05/30/2011 2039
Benzaldehyde	ND		1	67	17	ug/kg	05/27/2011 2145
Benzo(a)anthracene	ND		1	67	8.8	ug/kg	05/27/2011 2145
Benzo(a)pyrene	ND		1	67	9.3	ug/kg	05/27/2011 2145
Benzo(b)fluoranthene	ND		1	67	9.6	ug/kg	05/27/2011 2145
Benzo(g,h,i)perylene	ND		1	67	12	ug/kg	05/27/2011 2145
Benzo(k)fluoranthene	ND		1	67	9.5	ug/kg	05/27/2011 2145
bis(2-Chloroethoxy)methane	ND		1	67	10	ug/kg	05/27/2011 2145
bis(2-Chloroethyl)ether	ND		1	67	9.2	ug/kg	05/27/2011 2145
bis(2-Chloroisopropyl)ether	ND		1	67	11	ug/kg	05/27/2011 2145
bis(2-Ethylhexyl)phthalate	ND		1	67	22	ug/kg	05/27/2011 2145
Butyl benzyl phthalate	ND		1	130	44	ug/kg	05/27/2011 2145
Caprolactam	ND		1	67	17	ug/kg	05/27/2011 2145
Carbazole	ND		1	67	14	ug/kg	05/27/2011 2145
Chrysene	ND		1	67	11	ug/kg	05/27/2011 2145
Di-n-butyl phthalate	ND		1	67	22	ug/kg	05/27/2011 2145

PQL = Practical quantitation limit
ND = Not detected at or above the MDL
P = The RPD between two GC columns exceeds 40%
J = Estimated result < PQL and ≥ MDL
N - Recovery is out of criteria
+ - RPD is out of criteria

Where applicable, all soil sample analysis are reported on a dry weight basis unless flagged with a "W"

Note: Calculations are performed before rounding to avoid round-off errors in calculated results

Semivolatile Organic Compounds by GC/MS - MB

Sample ID: MQ60216-001
Batch: 60216
Analytical Method: 8270D

Matrix: Solid
Prep Method: 3550C
Prep Date: 05/23/2011 1751

Parameter	Result	Q	Dil	PQL	MDL	Units	Analysis Date
Di-n-octylphthalate	ND		1	67	32	ug/kg	05/27/2011 2145
Dibenzo(a,h)anthracene	ND		1	67	9.1	ug/kg	05/27/2011 2145
Dibenzofuran	ND		1	67	10	ug/kg	05/27/2011 2145
Diethylphthalate	ND		1	67	22	ug/kg	05/27/2011 2145
Dimethyl phthalate	ND		1	67	22	ug/kg	05/27/2011 2145
Fluoranthene	ND		1	67	11	ug/kg	05/27/2011 2145
Fluorene	ND		1	67	9.0	ug/kg	05/27/2011 2145
Hexachlorobenzene	ND		1	67	15	ug/kg	05/27/2011 2145
Hexachlorobutadiene	ND		1	67	11	ug/kg	05/27/2011 2145
Hexachlorocyclopentadiene	ND		1	330	25	ug/kg	05/27/2011 2145
Hexachloroethane	ND		1	67	8.9	ug/kg	05/27/2011 2145
Indeno(1,2,3-c,d)pyrene	ND		1	67	9.7	ug/kg	05/27/2011 2145
Isophorone	ND		1	67	7.4	ug/kg	05/27/2011 2145
N-Nitrosodi-n-propylamine	ND		1	67	13	ug/kg	05/27/2011 2145
N-Nitrosodiphenylamine (Diphenylamine)	ND		1	67	8.3	ug/kg	05/27/2011 2145
Naphthalene	ND		1	67	10	ug/kg	05/27/2011 2145
Nitrobenzene	ND		1	67	5.4	ug/kg	05/27/2011 2145
Pentachlorophenol	ND		1	330	140	ug/kg	05/27/2011 2145
Phenanthrene	ND		1	67	9.0	ug/kg	05/27/2011 2145
Phenol	ND		1	67	9.1	ug/kg	05/27/2011 2145
Pyrene	ND		1	67	13	ug/kg	05/27/2011 2145

Surrogate	Q	% Rec	Acceptance Limit
2,4,6-Tribromophenol		52	30-117
2-Fluorobiphenyl		51	33-102
2-Fluorophenol		54	28-104
Nitrobenzene-d5		48	22-109
Phenol-d5		54	27-103
Terphenyl-d14		52	41-120

PQL = Practical quantitation limit
ND = Not detected at or above the MDL
P = The RPD between two GC columns exceeds 40%
J = Estimated result < PQL and ≥ MDL
N - Recovery is out of criteria
+ - RPD is out of criteria

Where applicable, all soil sample analysis are reported on a dry weight basis unless flagged with a "W"

Note: Calculations are performed before rounding to avoid round-off errors in calculated results

Semivolatile Organic Compounds by GC/MS - LCS

Sample ID: MQ60216-002
Batch: 60216
Analytical Method: 8270D

Matrix: Solid
Prep Method: 3550C
Prep Date: 05/23/2011 1751

Parameter	Spike Amount (ug/kg)	Result (ug/kg)	Q	Dil	% Rec	% Rec Limit	Analysis Date
2,4,5-Trichlorophenol	1300	610		1	45	30-130	05/27/2011 2205
2,4,6-Trichlorophenol	1300	570		1	43	30-130	05/27/2011 2205
2,4-Dichlorophenol	1300	570		1	43	30-130	05/27/2011 2205
2,4-Dimethylphenol	1300	670		1	50	30-130	05/27/2011 2205
2,4-Dinitrophenol	6700	2800		1	42	30-130	05/27/2011 2205
2,4-Dinitrotoluene	2700	1300		1	47	30-130	05/27/2011 2205
2,6-Dinitrotoluene	2700	1300		1	47	30-130	05/27/2011 2205
2-Chloronaphthalene	1300	520		1	39	30-130	05/27/2011 2205
2-Chlorophenol	1300	500		1	38	30-130	05/27/2011 2205
2-Methylnaphthalene	1300	500		1	38	30-130	05/27/2011 2205
2-Methylphenol	1300	490		1	37	30-130	05/27/2011 2205
2-Nitroaniline	2700	1200		1	46	30-130	05/27/2011 2205
2-Nitrophenol	2700	950		1	36	30-130	05/27/2011 2205
3 & 4-Methylphenol	2700	1100		1	42	30-130	05/27/2011 2205
3-Nitroaniline	2700	1200		1	44	30-130	05/27/2011 2205
4,6-Dinitro-2-methylphenol	6700	3000		1	45	30-130	05/27/2011 2205
4-Bromophenyl phenyl ether	1300	560		1	42	30-130	05/27/2011 2205
4-Chloro-3-methyl phenol	1300	620		1	47	30-130	05/27/2011 2205
4-Chloroaniline	1300	220		1	16	10-130	05/27/2011 2205
4-Chlorophenyl phenyl ether	1300	580		1	43	30-130	05/27/2011 2205
4-Nitroaniline	2700	1300		1	48	30-130	05/27/2011 2205
4-Nitrophenol	6700	3200		1	48	30-130	05/27/2011 2205
Acenaphthene	1300	570		1	43	30-130	05/27/2011 2205
Acenaphthylene	1300	630		1	48	30-130	05/27/2011 2205
Anthracene	1300	600		1	45	30-130	05/27/2011 2205
Benzo(a)anthracene	1300	640		1	48	30-130	05/27/2011 2205
Benzo(a)pyrene	1300	680		1	51	30-130	05/27/2011 2205
Benzo(b)fluoranthene	1300	610		1	46	30-130	05/27/2011 2205
Benzo(g,h,i)perylene	1300	620		1	47	30-130	05/27/2011 2205
Benzo(k)fluoranthene	1300	610		1	46	30-130	05/27/2011 2205
bis(2-Chloroethoxy)methane	1300	540		1	40	30-130	05/27/2011 2205
bis(2-Chloroethyl)ether	1300	460		1	35	30-130	05/27/2011 2205
bis(2-Chloroisopropyl)ether	1300	450		1	34	30-130	05/27/2011 2205
bis(2-Ethylhexyl)phthalate	1300	670		1	51	30-130	05/27/2011 2205
Butyl benzyl phthalate	1300	660		1	49	30-130	05/27/2011 2205
Carbazole	1300	620		1	47	30-130	05/27/2011 2205
Chrysene	1300	640		1	48	30-130	05/27/2011 2205
Di-n-butyl phthalate	1300	650		1	49	30-130	05/27/2011 2205
Di-n-octylphthalate	1300	660		1	50	30-130	05/27/2011 2205
Dibenzo(a,h)anthracene	1300	610		1	46	30-130	05/27/2011 2205
Dibenzofuran	1300	560		1	42	30-130	05/27/2011 2205
Diethylphthalate	1300	640		1	48	30-130	05/27/2011 2205
Dimethyl phthalate	1300	620		1	46	30-130	05/27/2011 2205
Fluoranthene	1300	620		1	46	30-130	05/27/2011 2205

PQL = Practical quantitation limit
ND = Not detected at or above the MDL
P = The RPD between two GC columns exceeds 40%
J = Estimated result < PQL and ≥ MDL
N - Recovery is out of criteria
+ - RPD is out of criteria

Where applicable, all soil sample analysis are reported on a dry weight basis unless flagged with a "W"

Note: Calculations are performed before rounding to avoid round-off errors in calculated results

Semivolatile Organic Compounds by GC/MS - LCS

Sample ID: MQ60216-002
Batch: 60216
Analytical Method: 8270D

Matrix: Solid
Prep Method: 3550C
Prep Date: 05/23/2011 1751

Parameter	Spike Amount (ug/kg)	Result (ug/kg)	Q	Dil	% Rec	% Rec Limit	Analysis Date
Fluorene	1300	590		1	44	30-130	05/27/2011 2205
Hexachlorobenzene	1300	580		1	43	30-130	05/27/2011 2205
Hexachlorobutadiene	1300	420		1	32	30-130	05/27/2011 2205
Hexachlorocyclopentadiene	6700	2300		1	35	30-130	05/27/2011 2205
Hexachloroethane	1300	390	N	1	29	30-130	05/27/2011 2205
Indeno(1,2,3-c,d)pyrene	1300	610		1	45	30-130	05/27/2011 2205
N-Nitrosodiphenylamine (Diphenylamine)	1300	680		1	51	30-130	05/27/2011 2205
Naphthalene	1300	490		1	37	30-130	05/27/2011 2205
Nitrobenzene	1300	480		1	36	30-130	05/27/2011 2205
Pentachlorophenol	6700	3000		1	44	30-130	05/27/2011 2205
Phenanthrene	1300	590		1	44	30-130	05/27/2011 2205
Phenol	1300	530		1	40	30-130	05/27/2011 2205
Pyrene	1300	620		1	47	30-130	05/27/2011 2205

Surrogate	Q	% Rec	Acceptance Limit
2,4,6-Tribromophenol		48	30-117
2-Fluorobiphenyl		44	33-102
2-Fluorophenol		43	28-104
Nitrobenzene-d5		39	22-109
Phenol-d5		46	27-103
Terphenyl-d14		44	41-120

PQL = Practical quantitation limit
ND = Not detected at or above the MDL
P = The RPD between two GC columns exceeds 40%
J = Estimated result < PQL and ≥ MDL
N - Recovery is out of criteria
+ - RPD is out of criteria

Where applicable, all soil sample analysis are reported on a dry weight basis unless flagged with a "W"

Note: Calculations are performed before rounding to avoid round-off errors in calculated results

Semivolatile Organic Compounds by GC/MS - MS

Sample ID: ME20017-001MS
Batch: 60216
Analytical Method: 8270D

Matrix: Solid
Prep Method: 3550C
Prep Date: 05/23/2011 1751

Parameter	Sample Amount (ug/kg)	Spike Amount (ug/kg)	Result (ug/kg)	Q	Dil	% Rec	% Rec Limit	Analysis Date
Acenaphthene	ND	1400	710		1	50	30-130	05/27/2011 2321
Acenaphthylene	ND	1400	790		1	56	30-130	05/27/2011 2321
Anthracene	ND	1400	730		1	51	30-130	05/27/2011 2321
Benzo(a)anthracene	ND	1400	770		1	54	30-130	05/27/2011 2321
Benzo(a)pyrene	ND	1400	830		1	58	30-130	05/27/2011 2321
Benzo(b)fluoranthene	ND	1400	770		1	54	30-130	05/27/2011 2321
Benzo(g,h,i)perylene	ND	1400	780		1	55	30-130	05/27/2011 2321
Benzo(k)fluoranthene	ND	1400	720		1	51	30-130	05/27/2011 2321
4-Bromophenyl phenyl ether	ND	1400	710		1	50	30-130	05/27/2011 2321
Butyl benzyl phthalate	ND	1400	790		1	55	30-130	05/27/2011 2321
Carbazole	ND	1400	760		1	53	30-130	05/27/2011 2321
4-Chloro-3-methyl phenol	ND	1400	780		1	55	30-130	05/27/2011 2321
4-Chloroaniline	68	1400	270		1	14	10-130	05/27/2011 2321
bis(2-Chloroethoxy)methane	ND	1400	720		1	51	30-130	05/27/2011 2321
bis(2-Chloroethyl)ether	ND	1400	650		1	46	30-130	05/27/2011 2321
bis(2-Chloroisopropyl)ether	ND	1400	630		1	44	30-130	05/27/2011 2321
2-Chloronaphthalene	ND	1400	720		1	51	30-130	05/27/2011 2321
2-Chlorophenol	ND	1400	700		1	49	30-130	05/27/2011 2321
4-Chlorophenyl phenyl ether	ND	1400	720		1	51	30-130	05/27/2011 2321
Chrysene	ND	1400	760		1	53	30-130	05/27/2011 2321
Dibenzo(a,h)anthracene	ND	1400	760		1	53	30-130	05/27/2011 2321
Dibenzofuran	ND	1400	690		1	49	30-130	05/27/2011 2321
2,4-Dichlorophenol	ND	1400	740		1	52	30-130	05/27/2011 2321
Diethylphthalate	ND	1400	770		1	54	30-130	05/27/2011 2321
Dimethyl phthalate	ND	1400	750		1	53	30-130	05/27/2011 2321
2,4-Dimethylphenol	ND	1400	870		1	62	30-130	05/27/2011 2321
Di-n-butyl phthalate	ND	1400	770		1	55	30-130	05/27/2011 2321
4,6-Dinitro-2-methylphenol	ND	7100	3000		1	42	30-130	05/27/2011 2321
2,4-Dinitrophenol	ND	7100	1900	N	1	26	30-130	05/27/2011 2321
2,4-Dinitrotoluene	ND	2800	1500		1	53	30-130	05/27/2011 2321
2,6-Dinitrotoluene	ND	2800	1500		1	54	30-130	05/27/2011 2321
Di-n-octylphthalate	ND	1400	860		1	60	30-130	05/27/2011 2321
bis(2-Ethylhexyl)phthalate	ND	1400	820		1	58	30-130	05/27/2011 2321
Fluoranthene	ND	1400	750		1	53	30-130	05/27/2011 2321
Fluorene	ND	1400	730		1	52	30-130	05/27/2011 2321
Hexachlorobenzene	ND	1400	710		1	50	30-130	05/27/2011 2321
Hexachlorobutadiene	ND	1400	600		1	42	30-130	05/27/2011 2321
Hexachlorocyclopentadiene	ND	7100	2900		1	41	30-130	05/27/2011 2321
Hexachloroethane	ND	1400	510		1	36	30-130	05/27/2011 2321
Indeno(1,2,3-c,d)pyrene	ND	1400	750		1	53	30-130	05/27/2011 2321
2-Methylnaphthalene	ND	1400	660		1	47	30-130	05/27/2011 2321
2-Methylphenol	ND	1400	660		1	46	30-130	05/27/2011 2321
3 & 4-Methylphenol	ND	2800	1500		1	51	30-130	05/27/2011 2321
Naphthalene	ND	1400	660		1	46	30-130	05/27/2011 2321

PQL = Practical quantitation limit
ND = Not detected at or above the MDL
P = The RPD between two GC columns exceeds 40%
J = Estimated result < PQL and ≥ MDL
N - Recovery is out of criteria
+ - RPD is out of criteria

Where applicable, all soil sample analysis are reported on a dry weight basis unless flagged with a "W"

Note: Calculations are performed before rounding to avoid round-off errors in calculated results

Semivolatile Organic Compounds by GC/MS - MS

Sample ID: ME20017-001MS
Batch: 60216
Analytical Method: 8270D

Matrix: Solid
Prep Method: 3550C
Prep Date: 05/23/2011 1751

Parameter	Sample Amount (ug/kg)	Spike Amount (ug/kg)	Result (ug/kg)	Q	Dil	% Rec	% Rec Limit	Analysis Date
2-Nitroaniline	ND	2800	1500		1	53	30-130	05/27/2011 2321
3-Nitroaniline	ND	2800	1400		1	48	30-130	05/27/2011 2321
4-Nitroaniline	ND	2800	1500		1	51	30-130	05/27/2011 2321
Nitrobenzene	ND	1400	660		1	47	30-130	05/27/2011 2321
2-Nitrophenol	ND	2800	1300		1	47	30-130	05/27/2011 2321
4-Nitrophenol	ND	7100	3900		1	55	30-130	05/27/2011 2321
N-Nitrosodiphenylamine (Diphenylamine)	ND	1400	830		1	59	30-130	05/27/2011 2321
Pentachlorophenol	ND	7100	3600		1	51	30-130	05/27/2011 2321
Phenanthrene	ND	1400	720		1	51	30-130	05/27/2011 2321
Phenol	ND	1400	700		1	49	30-130	05/27/2011 2321
Pyrene	ND	1400	740		1	52	30-130	05/27/2011 2321
2,4,5-Trichlorophenol	ND	1400	770		1	54	30-130	05/27/2011 2321
2,4,6-Trichlorophenol	ND	1400	750		1	53	30-130	05/27/2011 2321

Surrogate	Q	% Rec	Acceptance Limit
2-Fluorobiphenyl		50	33-102
2-Fluorophenol		53	28-104
Nitrobenzene-d5		48	22-109
Phenol-d5		54	27-103
Terphenyl-d14		47	41-120
2,4,6-Tribromophenol		56	30-117

PQL = Practical quantitation limit
ND = Not detected at or above the MDL
P = The RPD between two GC columns exceeds 40%
J = Estimated result < PQL and ≥ MDL
N - Recovery is out of criteria
+ - RPD is out of criteria

Where applicable, all soil sample analysis are reported on a dry weight basis unless flagged with a "W"

Note: Calculations are performed before rounding to avoid round-off errors in calculated results

Semivolatile Organic Compounds by GC/MS - MSD

Sample ID: ME20017-001MD
Batch: 60216
Analytical Method: 8270D

Matrix: Solid
Prep Method: 3550C
Prep Date: 05/23/2011 1751

Parameter	Sample Amount (ug/kg)	Spike Amount (ug/kg)	Result (ug/kg)	Q	Dil	% Rec	% RPD	% Rec Limit	% RPD Limit	Analysis Date
Acenaphthene	ND	1400	730		1	52	3.3	30-130	20	05/27/2011 2340
Acenaphthylene	ND	1400	810		1	58	3.3	30-130	20	05/27/2011 2340
Anthracene	ND	1400	770		1	55	6.2	30-130	20	05/27/2011 2340
Benzo(a)anthracene	ND	1400	820		1	58	6.4	30-130	20	05/27/2011 2340
Benzo(a)pyrene	ND	1400	890		1	63	7.2	30-130	20	05/27/2011 2340
Benzo(b)fluoranthene	ND	1400	800		1	57	3.6	30-130	20	05/27/2011 2340
Benzo(g,h,i)perylene	ND	1400	830		1	59	6.5	30-130	20	05/27/2011 2340
Benzo(k)fluoranthene	ND	1400	780		1	55	7.8	30-130	20	05/27/2011 2340
4-Bromophenyl phenyl ether	ND	1400	760		1	53	6.6	30-130	20	05/27/2011 2340
Butyl benzyl phthalate	ND	1400	820		1	58	4.2	30-130	20	05/27/2011 2340
Carbazole	ND	1400	800		1	56	5.4	30-130	20	05/27/2011 2340
4-Chloro-3-methyl phenol	ND	1400	800		1	57	2.1	30-130	20	05/27/2011 2340
4-Chloroaniline	68	1400	270		1	15	2.2	10-130	40	05/27/2011 2340
bis(2-Chloroethoxy)methane	ND	1400	700		1	50	2.8	30-130	20	05/27/2011 2340
bis(2-Chloroethyl)ether	ND	1400	630		1	45	2.7	30-130	20	05/27/2011 2340
bis(2-Chloroisopropyl)ether	ND	1400	610		1	43	2.5	30-130	20	05/27/2011 2340
2-Chloronaphthalene	ND	1400	740		1	52	2.2	30-130	20	05/27/2011 2340
2-Chlorophenol	ND	1400	710		1	50	1.5	30-130	20	05/27/2011 2340
4-Chlorophenyl phenyl ether	ND	1400	750		1	53	3.4	30-130	20	05/27/2011 2340
Chrysene	ND	1400	770		1	55	1.8	30-130	20	05/27/2011 2340
Dibenzo(a,h)anthracene	ND	1400	790		1	56	4.6	30-130	20	05/27/2011 2340
Dibenzofuran	ND	1400	710		1	50	3.4	30-130	20	05/27/2011 2340
2,4-Dichlorophenol	ND	1400	750		1	53	1.3	30-130	20	05/27/2011 2340
Diethylphthalate	ND	1400	800		1	56	3.6	30-130	20	05/27/2011 2340
Dimethyl phthalate	ND	1400	780		1	55	3.3	30-130	20	05/27/2011 2340
2,4-Dimethylphenol	ND	1400	870		1	62	0.33	30-130	20	05/27/2011 2340
Di-n-butyl phthalate	ND	1400	820		1	58	5.5	30-130	20	05/27/2011 2340
4,6-Dinitro-2-methylphenol	ND	7100	3400		1	48	13	30-130	20	05/27/2011 2340
2,4-Dinitrophenol	ND	7100	2300	+	1	33	23	30-130	20	05/27/2011 2340
2,4-Dinitrotoluene	ND	2800	1600		1	56	4.3	30-130	20	05/27/2011 2340
2,6-Dinitrotoluene	ND	2800	1600		1	57	4.1	30-130	20	05/27/2011 2340
Di-n-octylphthalate	ND	1400	880		1	63	3.2	30-130	20	05/27/2011 2340
bis(2-Ethylhexyl)phthalate	ND	1400	840		1	60	3.1	30-130	20	05/27/2011 2340
Fluoranthene	ND	1400	810		1	57	7.0	30-130	20	05/27/2011 2340
Fluorene	ND	1400	760		1	54	3.5	30-130	20	05/27/2011 2340
Hexachlorobenzene	ND	1400	760		1	54	7.0	30-130	20	05/27/2011 2340
Hexachlorobutadiene	ND	1400	580		1	41	3.1	30-130	20	05/27/2011 2340
Hexachlorocyclopentadiene	ND	7100	3000		1	43	4.6	30-130	20	05/27/2011 2340
Hexachloroethane	ND	1400	500		1	35	1.5	30-130	20	05/27/2011 2340
Indeno(1,2,3-c,d)pyrene	ND	1400	790		1	56	5.3	30-130	20	05/27/2011 2340
2-Methylnaphthalene	ND	1400	660		1	47	0.64	30-130	20	05/27/2011 2340
2-Methylphenol	ND	1400	670		1	47	1.2	30-130	20	05/27/2011 2340
3 & 4-Methylphenol	ND	2800	1500		1	52	1.7	30-130	20	05/27/2011 2340
Naphthalene	ND	1400	660		1	46	0.56	30-130	20	05/27/2011 2340

PQL = Practical quantitation limit
ND = Not detected at or above the MDL
P = The RPD between two GC columns exceeds 40%
J = Estimated result < PQL and ≥ MDL
N - Recovery is out of criteria
+ - RPD is out of criteria

Where applicable, all soil sample analysis are reported on a dry weight basis unless flagged with a "W"

Note: Calculations are performed before rounding to avoid round-off errors in calculated results

Semivolatile Organic Compounds by GC/MS - MSD

Sample ID: ME20017-001MD
Batch: 60216
Analytical Method: 8270D

Matrix: Solid
Prep Method: 3550C
Prep Date: 05/23/2011 1751

Parameter	Sample Amount (ug/kg)	Spike Amount (ug/kg)	Result (ug/kg)	Q	Dil	% Rec	% RPD	% Rec Limit	% RPD Limit	Analysis Date
2-Nitroaniline	ND	2800	1600		1	56	5.0	30-130	20	05/27/2011 2340
3-Nitroaniline	ND	2800	1500		1	52	7.5	30-130	20	05/27/2011 2340
4-Nitroaniline	ND	2800	1600		1	55	6.4	30-130	20	05/27/2011 2340
Nitrobenzene	ND	1400	660		1	47	0.47	30-130	20	05/27/2011 2340
2-Nitrophenol	ND	2800	1300		1	47	1.0	30-130	20	05/27/2011 2340
4-Nitrophenol	ND	7100	4000		1	57	2.5	30-130	20	05/27/2011 2340
N-Nitrosodiphenylamine (Diphenylamine)	ND	1400	880		1	63	5.7	30-130	20	05/27/2011 2340
Pentachlorophenol	ND	7100	3900		1	55	6.9	30-130	20	05/27/2011 2340
Phenanthrene	ND	1400	760		1	54	5.1	30-130	20	05/27/2011 2340
Phenol	ND	1400	720		1	51	2.3	30-130	20	05/27/2011 2340
Pyrene	ND	1400	780		1	55	5.6	30-130	20	05/27/2011 2340
2,4,5-Trichlorophenol	ND	1400	820		1	58	6.3	30-130	20	05/27/2011 2340
2,4,6-Trichlorophenol	ND	1400	770		1	55	3.3	30-130	20	05/27/2011 2340

Surrogate	Q	% Rec	Acceptance Limit
2-Fluorobiphenyl		47	33-102
2-Fluorophenol		51	28-104
Nitrobenzene-d5		45	22-109
Phenol-d5		52	27-103
Terphenyl-d14		46	41-120
2,4,6-Tribromophenol		57	30-117

PQL = Practical quantitation limit
ND = Not detected at or above the MDL
P = The RPD between two GC columns exceeds 40%
J = Estimated result < PQL and ≥ MDL
N - Recovery is out of criteria
+ - RPD is out of criteria

Where applicable, all soil sample analysis are reported on a dry weight basis unless flagged with a "W"

Note: Calculations are performed before rounding to avoid round-off errors in calculated results

Semivolatile Organic Compounds by GC/MS - MB

Sample ID: MQ60960-001
Batch: 60960
Analytical Method: 8270D

Matrix: Solid
Prep Method: 3550C
Prep Date: 06/02/2011 1717

Parameter	Result	Q	Dil	PQL	MDL	Units	Analysis Date
1,1'-Biphenyl	ND		1	67	10	ug/kg	06/06/2011 1508
2,4,5-Trichlorophenol	ND		1	67	9.3	ug/kg	06/06/2011 1508
2,4,6-Trichlorophenol	ND		1	67	9.8	ug/kg	06/06/2011 1508
2,4-Dichlorophenol	ND		1	67	10	ug/kg	06/06/2011 1508
2,4-Dimethylphenol	ND		1	67	12	ug/kg	06/06/2011 1508
2,4-Dinitrophenol	ND		1	330	110	ug/kg	06/06/2011 1508
2,4-Dinitrotoluene	ND		1	130	18	ug/kg	06/06/2011 1508
2,6-Dinitrotoluene	ND		1	130	17	ug/kg	06/06/2011 1508
2-Chloronaphthalene	ND		1	67	11	ug/kg	06/06/2011 1508
2-Chlorophenol	ND		1	67	9.2	ug/kg	06/06/2011 1508
2-Methylnaphthalene	ND		1	67	9.9	ug/kg	06/06/2011 1508
2-Methylphenol	ND		1	67	6.0	ug/kg	06/06/2011 1508
2-Nitroaniline	ND		1	130	23	ug/kg	06/06/2011 1508
2-Nitrophenol	ND		1	130	18	ug/kg	06/06/2011 1508
3 & 4-Methylphenol	ND		1	130	12	ug/kg	06/06/2011 1508
3,3'-Dichlorobenzidine	ND		1	330	36	ug/kg	06/06/2011 1508
3-Nitroaniline	ND		1	130	39	ug/kg	06/06/2011 1508
4,6-Dinitro-2-methylphenol	ND		1	330	130	ug/kg	06/06/2011 1508
4-Bromophenyl phenyl ether	ND		1	67	9.8	ug/kg	06/06/2011 1508
4-Chloro-3-methyl phenol	ND		1	67	8.4	ug/kg	06/06/2011 1508
4-Chloroaniline	ND		1	67	6.8	ug/kg	06/06/2011 1508
4-Chlorophenyl phenyl ether	ND		1	67	11	ug/kg	06/06/2011 1508
4-Nitroaniline	ND		1	130	19	ug/kg	06/06/2011 1508
4-Nitrophenol	ND		1	330	96	ug/kg	06/06/2011 1508
Acenaphthene	ND		1	67	11	ug/kg	06/06/2011 1508
Acenaphthylene	ND		1	67	10	ug/kg	06/06/2011 1508
Acetophenone	ND		1	67	18	ug/kg	06/06/2011 1508
Anthracene	ND		1	67	7.4	ug/kg	06/06/2011 1508
Atrazine	ND		1	67	17	ug/kg	06/06/2011 1508
Benzaldehyde	ND		1	67	17	ug/kg	06/06/2011 1508
Benzo(a)anthracene	ND		1	67	8.8	ug/kg	06/06/2011 1508
Benzo(a)pyrene	ND		1	67	9.3	ug/kg	06/06/2011 1508
Benzo(b)fluoranthene	ND		1	67	9.6	ug/kg	06/06/2011 1508
Benzo(g,h,i)perylene	ND		1	67	12	ug/kg	06/06/2011 1508
Benzo(k)fluoranthene	ND		1	67	9.5	ug/kg	06/06/2011 1508
bis(2-Chloroethoxy)methane	ND		1	67	10	ug/kg	06/06/2011 1508
bis(2-Chloroethyl)ether	ND		1	67	9.2	ug/kg	06/06/2011 1508
bis(2-Chloroisopropyl)ether	ND		1	67	11	ug/kg	06/06/2011 1508
bis(2-Ethylhexyl)phthalate	ND		1	67	22	ug/kg	06/06/2011 1508
Butyl benzyl phthalate	ND		1	130	44	ug/kg	06/06/2011 1508
Caprolactam	ND		1	67	17	ug/kg	06/06/2011 1508
Carbazole	ND		1	67	14	ug/kg	06/06/2011 1508
Chrysene	ND		1	67	11	ug/kg	06/06/2011 1508
Di-n-butyl phthalate	ND		1	67	22	ug/kg	06/06/2011 1508

PQL = Practical quantitation limit
ND = Not detected at or above the MDL
P = The RPD between two GC columns exceeds 40%
J = Estimated result < PQL and ≥ MDL
N - Recovery is out of criteria
+ - RPD is out of criteria

Where applicable, all soil sample analysis are reported on a dry weight basis unless flagged with a "W"

Note: Calculations are performed before rounding to avoid round-off errors in calculated results

Semivolatile Organic Compounds by GC/MS - MB

Sample ID: MQ60960-001
Batch: 60960
Analytical Method: 8270D

Matrix: Solid
Prep Method: 3550C
Prep Date: 06/02/2011 1717

Parameter	Result	Q	Dil	PQL	MDL	Units	Analysis Date
Di-n-octylphthalate	ND		1	67	32	ug/kg	06/06/2011 1508
Dibenzo(a,h)anthracene	ND		1	67	9.1	ug/kg	06/06/2011 1508
Dibenzofuran	ND		1	67	10	ug/kg	06/06/2011 1508
Diethylphthalate	ND		1	67	22	ug/kg	06/06/2011 1508
Dimethyl phthalate	ND		1	67	22	ug/kg	06/06/2011 1508
Fluoranthene	ND		1	67	11	ug/kg	06/06/2011 1508
Fluorene	ND		1	67	9.0	ug/kg	06/06/2011 1508
Hexachlorobenzene	ND		1	67	15	ug/kg	06/06/2011 1508
Hexachlorobutadiene	ND		1	67	11	ug/kg	06/06/2011 1508
Hexachlorocyclopentadiene	ND		1	330	25	ug/kg	06/06/2011 1508
Hexachloroethane	ND		1	67	8.9	ug/kg	06/06/2011 1508
Indeno(1,2,3-c,d)pyrene	ND		1	67	9.7	ug/kg	06/06/2011 1508
Isophorone	ND		1	67	7.4	ug/kg	06/06/2011 1508
N-Nitrosodi-n-propylamine	ND		1	67	13	ug/kg	06/06/2011 1508
N-Nitrosodiphenylamine (Diphenylamine)	ND		1	67	8.3	ug/kg	06/06/2011 1508
Naphthalene	ND		1	67	10	ug/kg	06/06/2011 1508
Nitrobenzene	ND		1	67	5.4	ug/kg	06/06/2011 1508
Pentachlorophenol	ND		1	330	140	ug/kg	06/06/2011 1508
Phenanthrene	ND		1	67	9.0	ug/kg	06/06/2011 1508
Phenol	ND		1	67	9.1	ug/kg	06/06/2011 1508
Pyrene	ND		1	67	13	ug/kg	06/06/2011 1508

Surrogate	Q	% Rec	Acceptance Limit
2,4,6-Tribromophenol		64	30-117
2-Fluorobiphenyl		62	33-102
2-Fluorophenol		81	28-104
Nitrobenzene-d5		54	22-109
Phenol-d5		80	27-103
Terphenyl-d14		85	41-120

PQL = Practical quantitation limit
ND = Not detected at or above the MDL
P = The RPD between two GC columns exceeds 40%
J = Estimated result < PQL and ≥ MDL
N - Recovery is out of criteria
+ - RPD is out of criteria

Where applicable, all soil sample analysis are reported on a dry weight basis unless flagged with a "W"

Note: Calculations are performed before rounding to avoid round-off errors in calculated results

Semivolatile Organic Compounds by GC/MS - LCS

Sample ID: MQ60960-002
Batch: 60960
Analytical Method: 8270D

Matrix: Solid
Prep Method: 3550C
Prep Date: 06/02/2011 1717

Parameter	Spike Amount (ug/kg)	Result (ug/kg)	Q	Dil	% Rec	% Rec Limit	Analysis Date
2,4,5-Trichlorophenol	1300	960		1	72	30-130	06/06/2011 1528
2,4,6-Trichlorophenol	1300	910		1	68	30-130	06/06/2011 1528
2,4-Dichlorophenol	1300	790		1	59	30-130	06/06/2011 1528
2,4-Dimethylphenol	1300	880		1	66	30-130	06/06/2011 1528
2,4-Dinitrophenol	6700	5000		1	75	30-130	06/06/2011 1528
2,4-Dinitrotoluene	2700	2300		1	86	30-130	06/06/2011 1528
2,6-Dinitrotoluene	2700	2200		1	83	30-130	06/06/2011 1528
2-Chloronaphthalene	1300	660		1	49	30-130	06/06/2011 1528
2-Chlorophenol	1300	720		1	54	30-130	06/06/2011 1528
2-Methylnaphthalene	1300	480		1	36	30-130	06/06/2011 1528
2-Methylphenol	1300	720		1	54	30-130	06/06/2011 1528
2-Nitroaniline	2700	2300		1	85	30-130	06/06/2011 1528
2-Nitrophenol	2700	1300		1	48	30-130	06/06/2011 1528
3 & 4-Methylphenol	2700	1700		1	62	30-130	06/06/2011 1528
3-Nitroaniline	2700	2300		1	85	30-130	06/06/2011 1528
4,6-Dinitro-2-methylphenol	6700	6000		1	89	30-130	06/06/2011 1528
4-Bromophenyl phenyl ether	1300	1000		1	76	30-130	06/06/2011 1528
4-Chloro-3-methyl phenol	1300	1000		1	75	30-130	06/06/2011 1528
4-Chloroaniline	1300	440		1	33	10-130	06/06/2011 1528
4-Chlorophenyl phenyl ether	1300	900		1	68	30-130	06/06/2011 1528
4-Nitroaniline	2700	2400		1	90	30-130	06/06/2011 1528
4-Nitrophenol	6700	5300		1	80	30-130	06/06/2011 1528
Acenaphthene	1300	810		1	60	30-130	06/06/2011 1528
Acenaphthylene	1300	920		1	69	30-130	06/06/2011 1528
Anthracene	1300	1100		1	86	30-130	06/06/2011 1528
Benzo(a)anthracene	1300	1200		1	93	30-130	06/06/2011 1528
Benzo(a)pyrene	1300	1400		1	102	30-130	06/06/2011 1528
Benzo(b)fluoranthene	1300	1200		1	88	30-130	06/06/2011 1528
Benzo(g,h,i)perylene	1300	1300		1	96	30-130	06/06/2011 1528
Benzo(k)fluoranthene	1300	1200		1	94	30-130	06/06/2011 1528
bis(2-Chloroethoxy)methane	1300	780		1	58	30-130	06/06/2011 1528
bis(2-Chloroethyl)ether	1300	590		1	44	30-130	06/06/2011 1528
bis(2-Chloroisopropyl)ether	1300	430		1	32	30-130	06/06/2011 1528
bis(2-Ethylhexyl)phthalate	1300	1400		1	103	30-130	06/06/2011 1528
Butyl benzyl phthalate	1300	1300		1	101	30-130	06/06/2011 1528
Carbazole	1300	1300		1	94	30-130	06/06/2011 1528
Chrysene	1300	1200		1	93	30-130	06/06/2011 1528
Di-n-butyl phthalate	1300	1300		1	98	30-130	06/06/2011 1528
Di-n-octylphthalate	1300	1200		1	90	30-130	06/06/2011 1528
Dibenzo(a,h)anthracene	1300	1200		1	90	30-130	06/06/2011 1528
Dibenzofuran	1300	830		1	62	30-130	06/06/2011 1528
Diethylphthalate	1300	1200		1	89	30-130	06/06/2011 1528
Dimethyl phthalate	1300	1200		1	87	30-130	06/06/2011 1528
Fluoranthene	1300	1200		1	92	30-130	06/06/2011 1528

PQL = Practical quantitation limit
ND = Not detected at or above the MDL
P = The RPD between two GC columns exceeds 40%
J = Estimated result < PQL and ≥ MDL
N - Recovery is out of criteria
+ - RPD is out of criteria

Where applicable, all soil sample analysis are reported on a dry weight basis unless flagged with a "W"

Note: Calculations are performed before rounding to avoid round-off errors in calculated results

Semivolatile Organic Compounds by GC/MS - LCS

Sample ID: MQ60960-002
Batch: 60960
Analytical Method: 8270D

Matrix: Solid
Prep Method: 3550C
Prep Date: 06/02/2011 1717

Parameter	Spike Amount (ug/kg)	Result (ug/kg)	Q	Dil	% Rec	% Rec Limit	Analysis Date
Fluorene	1300	930		1	70	30-130	06/06/2011 1528
Hexachlorobenzene	1300	1100		1	79	30-130	06/06/2011 1528
Hexachlorobutadiene	1300	310	N	1	23	30-130	06/06/2011 1528
Hexachlorocyclopentadiene	6700	1800	N	1	27	30-130	06/06/2011 1528
Hexachloroethane	1300	280	N	1	21	30-130	06/06/2011 1528
Indeno(1,2,3-c,d)pyrene	1300	1200		1	93	30-130	06/06/2011 1528
N-Nitrosodiphenylamine (Diphenylamine)	1300	1300		1	98	30-130	06/06/2011 1528
Naphthalene	1300	430		1	32	30-130	06/06/2011 1528
Nitrobenzene	1300	570		1	43	30-130	06/06/2011 1528
Pentachlorophenol	6700	5200		1	78	30-130	06/06/2011 1528
Phenanthrene	1300	1100		1	84	30-130	06/06/2011 1528
Phenol	1300	870		1	65	30-130	06/06/2011 1528
Pyrene	1300	1200		1	92	30-130	06/06/2011 1528

Surrogate	Q	% Rec	Acceptance Limit
2,4,6-Tribromophenol		82	30-117
2-Fluorobiphenyl		46	33-102
2-Fluorophenol		62	28-104
Nitrobenzene-d5		40	22-109
Phenol-d5		68	27-103
Terphenyl-d14		85	41-120

PQL = Practical quantitation limit
ND = Not detected at or above the MDL
P = The RPD between two GC columns exceeds 40%
J = Estimated result < PQL and ≥ MDL
N - Recovery is out of criteria
+ - RPD is out of criteria

Where applicable, all soil sample analysis are reported on a dry weight basis unless flagged with a "W"

Note: Calculations are performed before rounding to avoid round-off errors in calculated results

Semivolatile Organic Compounds by GC/MS - MS

Sample ID: ME20017-005MS
Batch: 60960
Analytical Method: 8270D

Matrix: Solid
Prep Method: 3550C
Prep Date: 06/02/2011 1717

Parameter	Sample Amount (ug/kg)	Spike Amount (ug/kg)	Result (ug/kg)	Q	Dil	% Rec	% Rec Limit	Analysis Date
Acenaphthene	ND	1400	970		1	68	30-130	06/06/2011 2009
Acenaphthylene	66	1400	1200		1	80	30-130	06/06/2011 2009
Anthracene	31	1400	1200		1	81	30-130	06/06/2011 2009
Benzo(a)anthracene	70	1400	1300		1	84	30-130	06/06/2011 2009
Benzo(a)pyrene	91	1400	1400		1	91	30-130	06/06/2011 2009
Benzo(b)fluoranthene	140	1400	1300		1	79	30-130	06/06/2011 2009
Benzo(g,h,i)perylene	89	1400	1300		1	82	30-130	06/06/2011 2009
Benzo(k)fluoranthene	50	1400	1200		1	83	30-130	06/06/2011 2009
4-Bromophenyl phenyl ether	ND	1400	1100		1	75	30-130	06/06/2011 2009
Butyl benzyl phthalate	ND	1400	1300		1	91	30-130	06/06/2011 2009
Carbazole	ND	1400	1300		1	87	30-130	06/06/2011 2009
4-Chloro-3-methyl phenol	ND	1400	1200		1	80	30-130	06/06/2011 2009
4-Chloroaniline	ND	1400	290		1	20	10-130	06/06/2011 2009
bis(2-Chloroethoxy)methane	ND	1400	980		1	68	30-130	06/06/2011 2009
bis(2-Chloroethyl)ether	ND	1400	930		1	64	30-130	06/06/2011 2009
bis(2-Chloroisopropyl)ether	ND	1400	820		1	57	30-130	06/06/2011 2009
2-Chloronaphthalene	ND	1400	890		1	62	30-130	06/06/2011 2009
2-Chlorophenol	ND	1400	1000		1	72	30-130	06/06/2011 2009
4-Chlorophenyl phenyl ether	ND	1400	1100		1	76	30-130	06/06/2011 2009
Chrysene	100	1400	1200		1	78	30-130	06/06/2011 2009
Dibenzo(a,h)anthracene	19	1400	1200		1	85	30-130	06/06/2011 2009
Dibenzofuran	ND	1400	1000		1	70	30-130	06/06/2011 2009
2,4-Dichlorophenol	ND	1400	1000		1	69	30-130	06/06/2011 2009
Diethylphthalate	ND	1400	1200		1	83	30-130	06/06/2011 2009
Dimethyl phthalate	ND	1400	1100		1	78	30-130	06/06/2011 2009
2,4-Dimethylphenol	ND	1400	1000		1	72	30-130	06/06/2011 2009
Di-n-butyl phthalate	ND	1400	1300		1	91	30-130	06/06/2011 2009
4,6-Dinitro-2-methylphenol	ND	7200	1700	N	1	24	30-130	06/06/2011 2009
2,4-Dinitrophenol	ND	7200	590	N	1	8.2	30-130	06/06/2011 2009
2,4-Dinitrotoluene	ND	2900	2300		1	79	30-130	06/06/2011 2009
2,6-Dinitrotoluene	ND	2900	2300		1	78	30-130	06/06/2011 2009
Di-n-octylphthalate	ND	1400	1300		1	90	30-130	06/06/2011 2009
bis(2-Ethylhexyl)phthalate	ND	1400	1400		1	98	30-130	06/06/2011 2009
Fluoranthene	120	1400	1300		1	83	30-130	06/06/2011 2009
Fluorene	ND	1400	1100		1	77	30-130	06/06/2011 2009
Hexachlorobenzene	ND	1400	1100		1	76	30-130	06/06/2011 2009
Hexachlorobutadiene	ND	1400	690		1	48	30-130	06/06/2011 2009
Hexachlorocyclopentadiene	ND	7200	1900	N	1	26	30-130	06/06/2011 2009
Hexachloroethane	ND	1400	540		1	37	30-130	06/06/2011 2009
Indeno(1,2,3-c,d)pyrene	62	1400	1300		1	85	30-130	06/06/2011 2009
2-Methylnaphthalene	15	1400	860		1	59	30-130	06/06/2011 2009
2-Methylphenol	ND	1400	900		1	62	30-130	06/06/2011 2009
3 & 4-Methylphenol	ND	2900	1900		1	66	30-130	06/06/2011 2009
Naphthalene	ND	1400	780		1	54	30-130	06/06/2011 2009

PQL = Practical quantitation limit
ND = Not detected at or above the MDL
P = The RPD between two GC columns exceeds 40%
J = Estimated result < PQL and ≥ MDL
N - Recovery is out of criteria
+ - RPD is out of criteria

Where applicable, all soil sample analysis are reported on a dry weight basis unless flagged with a "W"

Note: Calculations are performed before rounding to avoid round-off errors in calculated results

Semivolatile Organic Compounds by GC/MS - MS

Sample ID: ME20017-005MS
Batch: 60960
Analytical Method: 8270D

Matrix: Solid
Prep Method: 3550C
Prep Date: 06/02/2011 1717

Parameter	Sample Amount (ug/kg)	Spike Amount (ug/kg)	Result (ug/kg)	Q	Dil	% Rec	% Rec Limit	Analysis Date
2-Nitroaniline	ND	2900	2200		1	78	30-130	06/06/2011 2009
3-Nitroaniline	ND	2900	2100		1	73	30-130	06/06/2011 2009
4-Nitroaniline	ND	2900	2100		1	74	30-130	06/06/2011 2009
Nitrobenzene	ND	1400	900		1	62	30-130	06/06/2011 2009
2-Nitrophenol	ND	2900	1800		1	63	30-130	06/06/2011 2009
4-Nitrophenol	ND	7200	4900		1	69	30-130	06/06/2011 2009
N-Nitrosodiphenylamine (Diphenylamine)	ND	1400	1300		1	91	30-130	06/06/2011 2009
Pentachlorophenol	ND	7200	4300		1	60	30-130	06/06/2011 2009
Phenanthrene	52	1400	1200		1	80	30-130	06/06/2011 2009
Phenol	ND	1400	1100		1	74	30-130	06/06/2011 2009
Pyrene	140	1400	1300		1	78	30-130	06/06/2011 2009
2,4,5-Trichlorophenol	ND	1400	1100		1	77	30-130	06/06/2011 2009
2,4,6-Trichlorophenol	ND	1400	1100		1	74	30-130	06/06/2011 2009

Surrogate	Q	% Rec	Acceptance Limit
2-Fluorobiphenyl		62	33-102
2-Fluorophenol		84	28-104
Nitrobenzene-d5		58	22-109
Phenol-d5		77	27-103
Terphenyl-d14		74	41-120
2,4,6-Tribromophenol		76	30-117

PQL = Practical quantitation limit
ND = Not detected at or above the MDL
P = The RPD between two GC columns exceeds 40%
J = Estimated result < PQL and ≥ MDL
N - Recovery is out of criteria
+ - RPD is out of criteria

Where applicable, all soil sample analysis are reported on a dry weight basis unless flagged with a "W"

Note: Calculations are performed before rounding to avoid round-off errors in calculated results

Semivolatile Organic Compounds by GC/MS - MSD

Sample ID: ME20017-005MD
Batch: 60960
Analytical Method: 8270D

Matrix: Solid
Prep Method: 3550C
Prep Date: 06/02/2011 1717

Parameter	Sample Amount (ug/kg)	Spike Amount (ug/kg)	Result (ug/kg)	Q	Dil	% Rec	% RPD	% Rec Limit	% RPD Limit	Analysis Date
Acenaphthene	ND	1400	1000		1	72	4.9	30-130	20	06/06/2011 2029
Acenaphthylene	66	1400	1200		1	82	0.44	30-130	20	06/06/2011 2029
Anthracene	31	1400	1200		1	84	1.8	30-130	20	06/06/2011 2029
Benzo(a)anthracene	70	1400	1300		1	88	2.2	30-130	20	06/06/2011 2029
Benzo(a)pyrene	91	1400	1400		1	93	0.20	30-130	20	06/06/2011 2029
Benzo(b)fluoranthene	140	1400	1300		1	82	1.4	30-130	20	06/06/2011 2029
Benzo(g,h,i)perylene	89	1400	1300		1	84	0.32	30-130	20	06/06/2011 2029
Benzo(k)fluoranthene	50	1400	1200		1	84	0.58	30-130	20	06/06/2011 2029
4-Bromophenyl phenyl ether	ND	1400	1100		1	80	3.5	30-130	20	06/06/2011 2029
Butyl benzyl phthalate	ND	1400	1300		1	94	1.5	30-130	20	06/06/2011 2029
Carbazole	ND	1400	1300		1	90	1.2	30-130	20	06/06/2011 2029
4-Chloro-3-methyl phenol	ND	1400	1200		1	82	1.0	30-130	20	06/06/2011 2029
4-Chloroaniline	ND	1400	350		1	25	18	10-130	40	06/06/2011 2029
bis(2-Chloroethoxy)methane	ND	1400	990		1	70	1.1	30-130	20	06/06/2011 2029
bis(2-Chloroethyl)ether	ND	1400	890		1	63	4.0	30-130	20	06/06/2011 2029
bis(2-Chloroisopropyl)ether	ND	1400	810		1	57	1.6	30-130	20	06/06/2011 2029
2-Chloronaphthalene	ND	1400	1000		1	73	15	30-130	20	06/06/2011 2029
2-Chlorophenol	ND	1400	1100		1	75	2.0	30-130	20	06/06/2011 2029
4-Chlorophenyl phenyl ether	ND	1400	1100		1	77	1.1	30-130	20	06/06/2011 2029
Chrysene	100	1400	1300		1	83	3.7	30-130	20	06/06/2011 2029
Dibenzo(a,h)anthracene	19	1400	1300		1	89	1.8	30-130	20	06/06/2011 2029
Dibenzofuran	ND	1400	1000		1	73	1.5	30-130	20	06/06/2011 2029
2,4-Dichlorophenol	ND	1400	1000		1	74	4.5	30-130	20	06/06/2011 2029
Diethylphthalate	ND	1400	1200		1	82	2.5	30-130	20	06/06/2011 2029
Dimethyl phthalate	ND	1400	1100		1	79	0.36	30-130	20	06/06/2011 2029
2,4-Dimethylphenol	ND	1400	1100		1	75	2.9	30-130	20	06/06/2011 2029
Di-n-butyl phthalate	ND	1400	1300		1	92	0.94	30-130	20	06/06/2011 2029
4,6-Dinitro-2-methylphenol	ND	7100	2800	+	1	39	45	30-130	20	06/06/2011 2029
2,4-Dinitrophenol	ND	7100	770	N,+	1	11	26	30-130	20	06/06/2011 2029
2,4-Dinitrotoluene	ND	2800	2300		1	80	0.18	30-130	20	06/06/2011 2029
2,6-Dinitrotoluene	ND	2800	2300		1	81	0.97	30-130	20	06/06/2011 2029
Di-n-octylphthalate	ND	1400	1300		1	91	0.62	30-130	20	06/06/2011 2029
bis(2-Ethylhexyl)phthalate	ND	1400	1400		1	98	1.5	30-130	20	06/06/2011 2029
Fluoranthene	120	1400	1300		1	83	1.7	30-130	20	06/06/2011 2029
Fluorene	ND	1400	1100		1	80	1.0	30-130	20	06/06/2011 2029
Hexachlorobenzene	ND	1400	1100		1	80	2.1	30-130	20	06/06/2011 2029
Hexachlorobutadiene	ND	1400	740		1	52	6.1	30-130	20	06/06/2011 2029
Hexachlorocyclopentadiene	ND	7100	2800	+	1	40	40	30-130	20	06/06/2011 2029
Hexachloroethane	ND	1400	570		1	40	6.1	30-130	20	06/06/2011 2029
Indeno(1,2,3-c,d)pyrene	62	1400	1300		1	87	0.10	30-130	20	06/06/2011 2029
2-Methylnaphthalene	15	1400	910		1	63	5.3	30-130	20	06/06/2011 2029
2-Methylphenol	ND	1400	920		1	65	2.4	30-130	20	06/06/2011 2029
3 & 4-Methylphenol	ND	2800	2000		1	71	5.2	30-130	20	06/06/2011 2029
Naphthalene	ND	1400	860		1	61	8.7	30-130	20	06/06/2011 2029

PQL = Practical quantitation limit
ND = Not detected at or above the MDL
P = The RPD between two GC columns exceeds 40%
J = Estimated result < PQL and ≥ MDL
N - Recovery is out of criteria
+ - RPD is out of criteria

Where applicable, all soil sample analysis are reported on a dry weight basis unless flagged with a "W"

Note: Calculations are performed before rounding to avoid round-off errors in calculated results

Semivolatile Organic Compounds by GC/MS - MSD

Sample ID: ME20017-005MD
Batch: 60960
Analytical Method: 8270D

Matrix: Solid
Prep Method: 3550C
Prep Date: 06/02/2011 1717

Parameter	Sample Amount (ug/kg)	Spike Amount (ug/kg)	Result (ug/kg)	Q	Dil	% Rec	% RPD	% Rec Limit	% RPD Limit	Analysis Date
2-Nitroaniline	ND	2800	2300		1	81	2.6	30-130	20	06/06/2011 2029
3-Nitroaniline	ND	2800	2200		1	76	2.2	30-130	20	06/06/2011 2029
4-Nitroaniline	ND	2800	2200		1	76	0.66	30-130	20	06/06/2011 2029
Nitrobenzene	ND	1400	930		1	66	3.2	30-130	20	06/06/2011 2029
2-Nitrophenol	ND	2800	1900		1	67	4.1	30-130	20	06/06/2011 2029
4-Nitrophenol	ND	7100	5100		1	72	3.3	30-130	20	06/06/2011 2029
N-Nitrosodiphenylamine (Diphenylamine)	ND	1400	1400		1	98	4.7	30-130	20	06/06/2011 2029
Pentachlorophenol	ND	7100	4700		1	66	7.3	30-130	20	06/06/2011 2029
Phenanthrene	52	1400	1200		1	82	0.21	30-130	20	06/06/2011 2029
Phenol	ND	1400	1100		1	78	3.4	30-130	20	06/06/2011 2029
Pyrene	140	1400	1300		1	81	2.3	30-130	20	06/06/2011 2029
2,4,5-Trichlorophenol	ND	1400	1100		1	81	3.1	30-130	20	06/06/2011 2029
2,4,6-Trichlorophenol	ND	1400	1100		1	76	0.064	30-130	20	06/06/2011 2029

Surrogate	Q	% Rec	Acceptance Limit
2-Fluorobiphenyl		66	33-102
2-Fluorophenol		83	28-104
Nitrobenzene-d5		60	22-109
Phenol-d5		80	27-103
Terphenyl-d14		76	41-120
2,4,6-Tribromophenol		81	30-117

PQL = Practical quantitation limit
ND = Not detected at or above the MDL
P = The RPD between two GC columns exceeds 40%
J = Estimated result < PQL and ≥ MDL
N - Recovery is out of criteria
+ - RPD is out of criteria

Where applicable, all soil sample analysis are reported on a dry weight basis unless flagged with a "W"

Note: Calculations are performed before rounding to avoid round-off errors in calculated results

SHEALY ENVIRONMENTAL SERVICES, INC.

SHEALY Chain of Custody Record

SHEALY ENVIRONMENTAL SERVICES, INC.
106 Vantage Point Drive
West Columbia, South Carolina 29172
Telephone No. (803) 791-9700 Fax No. (803) 791-9111

Number 107030

Client	ARCADIS
Address	801 Corporate Center Dr. Suite 300
City	Raleigh
State	NC
Zip Code	27607
Project Name	FST-39
Project No.	GP08HAFS.F39A.DG0FI
P.O. No.	
Report to Contact	Allison Fang
Sampler's Signature	X
Printed Name	Jared Fino
Telephone No. / Fax No. / E-mail	919 854 1282
Waybill No.	
Quote No.	
Page	1 of 1
Lot No.	MT20017

Analysis (Attach list if more space is needed.): SVOCs 8270

Sample ID / Description (Containers for each sample may be combined on one line.)	Date	Time	G=Grab C=Composite	Matrix: Aqueous	Solid	Non-Aqueous	No. of Containers by Preservative Type: Unpres.	H2SO4	HNO3	HCl	NaOH	ZnAc Kit		SVOCs 8270	Remarks / Cooler I.D.
F39SB015 (0-0.5)	5-19-11	0915	G		X		X							X	
F39SB015 (3-3.5)	5-19-11	0930	G		X		X							X	
F39SB016 (0-0.5)	5-19-11	1000	G		X		X							X	
F39SB016 (3-3.5)	5-19-11	1005	G		X		X							X	
F39SB017 (0-0.5)	5-19-11	1020	G		X		X							X	HOLD PENDING ARCADIS APPROVAL
F39SB017 (3-3.5)	5-19-11	1026	G		X		X							X	HOLD PENDING ARCADIS APPROVAL

Possible Hazard Identification: ☐ Non-Hazard ☐ Flammable ☐ Skin Irritant ☐ Poison ☒ Unknown

Sample Disposal: ☐ Return to Client ☒ Disposal by Lab

Note: All samples are retained for six weeks from receipt unless other arrangements are made.

Turn Around Time Required (Prior lab approval required for expedited TAT.): ☒ Standard ☐ Rush (Specify)

QC Requirements (Specify):

	Date	Time		Date	Time
1. Relinquished by: Jared Fino	5/19/11	1620	1. Received by		
2. Relinquished by			2. Received by		
3. Relinquished by: FedEx	5/20/11	0900	3. Laboratory received by	5/20/11	0900

Comments:

LAB USE ONLY: Received on Ice (Circle) Yes No Ice Pack

Receipt Temp. 2.0 °C

DISTRIBUTION: WHITE & YELLOW-Return to laboratory with Sample(s); PINK-Field/Client Copy

Document Number: F-AD-012 Effective Date: 08-04-02

SHEALY ENVIRONMENTAL SERVICES, INC.

Shealy Environmental Services, Inc.
Document Number: F-AD-016
Revision Number: 8

Page 1 of 1
Replaces Date: 02/23/11
Effective Date: 05/06/11

Sample Receipt Checklist (SRC)

Client: Arcadis Cooler Inspected by/date: [illegible] / 5/20/11 Lot #: ME2007

Means of receipt: ☐ SESI ☐ Client ☐ UPS ☑ FedEx ☐ Airborne Exp ☐ Other

Yes ☑	No ☐		1. Were custody seals present on the cooler?
Yes ☑	No ☐		2. If custody seals were present, were they intact and unbroken?

Cooler ID/temperature upon receipt 2.0 °C / °C / °C / °C / °C / °C / °C / °C

Method: ☐ Temperature Blank ☑ Against Bottles
Method of coolant: ☑ Wet Ice ☐ Blue Ice ☐ Dry Ice ☐ None

If response is No (or Yes for 14, 15, 16), an explanation/resolution must be provided.

Yes ☐	No ☐	NA ☑	3. If temperature of any cooler exceeded 6.0°C, was Project Manager notified? PM notified by SRC, phone, note (circle one), other:_____. (For coolers received via commercial courier, PMs are to be notified immediately.
Yes ☑	No ☐	NA ☐	4. Is the commercial courier's packing slip attached to this form?
Yes ☐	No ☑		5. Were proper custody procedures (relinquished/received) followed?
Yes ☐	No ☑	NA ☐	5a Were samples relinquished by client to commercial courier?
Yes ☑	No ☐		6. Were sample IDs listed?
Yes ☑	No ☐		7. Was collection date & time listed?
Yes ☑	No ☐		8. Were tests to be performed listed on the COC?
Yes ☑	No ☐		9. Did all samples arrive in the proper containers for each test?
Yes ☑	No ☐		10. Did all container label information (ID, date, time) agree with COC?
Yes ☑	No ☐		11. Did all containers arrive in good condition (unbroken, lids on, etc.)?
Yes ☑	No ☐		12. Was adequate sample volume available?
Yes ☑	No ☐		13. Were all samples received within ½ the holding time or 48 hours, whichever comes first?
Yes ☐	No ☑		14. Were any samples containers missing?
Yes ☐	No ☑		15. Were there any excess samples not listed on COC?
Yes ☐	No ☐	NA ☑	16. Were bubbles present >"pea-size" (¼"or 6mm in diameter) in any VOA vials?
Yes ☐	No ☐	NA ☑	17. Were all metals/O&G/HEM/nutrient samples received at a pH of <2?
Yes ☐	No ☐	NA ☑	18. Were all cyanide and/or sulfide samples received at a pH >12?
Yes ☐	No ☐	NA ☑	19. Were all applicable NH3/TKN/cyanide/phenol/BNA/pest/PCB/herb (<0.2mg/L)samples free of residual chlorine?
Yes ☐	No ☑	NA ☐	20. Were collection temperatures documented on the COC for NC samples?

Sample Preservation (Must be completed for any sample(s) incorrectly preserved or with headspace.)

Sample(s)_____ were received incorrectly preserved and were adjusted accordingly in sample receiving with _____ (H_2SO_4,HNO_3,HCl,NaOH) with the SR # (number) _____.

Sample(s)_____ were received with bubbles >6 mm in diameter.

Sample(s)_____ were received with TRC >0.2 mg/L for NH3/TKN/cyanide/BNA/pest/PCB/herb.

Corrective Action taken, if necessary:
Was client notified: Yes ☐ No ☐
SESI employee:_____
Comments:_____

This portion can be removed for Recipient's records.
5-19-11 FedEx Tracking Number 874197703328
Sender's Name X Javed Fico Phone 919 854-1282
Did client respond: Yes ☐ No ☐
Company ARCADIS G & M OF NC INC
Address 801 CORPORATE CENTER DR
Dept/Floor/Suite/Room
RALEIGH State NC ZIP 27607-5243
Your Internal Billing Reference

Report of Analysis

ARCADIS U.S., Inc.
30 Patewood Drive
Suite 155
Greenville, SC 29615
Attention: Allison Fang

Project Name: FST-39

Project Number: GP09HAFS.F39A.DGOFI

Lot Number: MG16005

Date Completed: 07/21/2011

Nisreen Saikaly
Project Manager

This report shall not be reproduced, except in its entirety, without the written approval of Shealy Environmental Services, Inc.

The following non-paginated documents are considered part of this report: Chain of Custody Record and Sample Receipt Checklist.

* MG 1 6 0 0 5 *

Case Narrative
ARCADIS U.S., Inc.
Lot Number: MG16005

This Report of Analysis contains the analytical result(s) for the sample(s) listed on the Sample Summary following this Case Narrative. The sample receiving date is documented in the header information associated with each sample.

All results listed in this report relate only to the samples that are contained within this report.

Sample receipt, sample analysis, and data review have been performed in accordance with the most current approved NELAC standards, the Shealy Environmental Services, Inc. ("Shealy") Quality Assurance Management Plan (QAMP), standard operating procedures (SOPs), and Shealy policies. Any exceptions to the NELAC standards, the QAMP, SOPs or policies are qualified on the results page or discussed below.

Shealy is not NELAC certified for Phosphorus by 365.1 but is certified in SC and NC.

Shealy is not NELAC certified for VPH, but is certified for VPH in NC.

If you have any questions regarding this report please contact the Shealy Project Manager listed on the cover page.

Sample Summary

ARCADIS U.S., Inc.

Lot Number: MG16005

Sample Number	Sample ID	Matrix	Date Sampled	Date Received
001	G4MW-052	Aqueous	07/12/2011 1920	07/16/2011
002	TRIP BLANK	Aqueous	07/12/2011	07/16/2011

(2 samples)

Executive Summary

ARCADIS U.S., Inc.

Lot Number: MG16005

Sample	Sample ID	Matrix	Parameter	Method	Result	Q	Units	Page
001	G4MW-052	Aqueous	Acetone	8260B	11	J	ug/L	5
001	G4MW-052	Aqueous	Benzene	8260B	0.13	J	ug/L	5
001	G4MW-052	Aqueous	1,1-Dichloroethane	8260B	1.7		ug/L	5
001	G4MW-052	Aqueous	cis-1,2-Dichloroethene	8260B	2.0		ug/L	5
001	G4MW-052	Aqueous	1,1-Dichloroethene	8260B	3.0		ug/L	5
001	G4MW-052	Aqueous	Trichloroethene	8260B	8.7		ug/L	5
002	TRIP BLANK	Aqueous	Toluene	8260B	0.84	J	ug/L	7

(7 detections)

Volatile Organic Compounds by GC/MS

Client: ARCADIS U.S., Inc.
Laboratory ID: MG16005-001
Description: G4MW-052
Matrix: Aqueous
Date Sampled: 07/12/2011 1920
Date Received: 07/16/2011

Run	Prep Method	Analytical Method	Dilution	Analysis Date	Analyst	Prep Date	Batch
1	5030B	8260B	1	07/20/2011 1703	BM		64090

Parameter	CAS Number	Analytical Method	Result	Q	PQL	MDL	Units	Run
Acetone	67-64-1	8260B	11	J	20	6.7	ug/L	1
Benzene	71-43-2	8260B	0.13	J	1.0	0.13	ug/L	1
Bromodichloromethane	75-27-4	8260B	ND		1.0	0.33	ug/L	1
Bromoform	75-25-2	8260B	ND		1.0	0.66	ug/L	1
Bromomethane (Methyl bromide)	74-83-9	8260B	ND		2.0	0.80	ug/L	1
2-Butanone (MEK)	78-93-3	8260B	ND		10	2.0	ug/L	1
Carbon disulfide	75-15-0	8260B	ND		1.0	0.097	ug/L	1
Carbon tetrachloride	56-23-5	8260B	ND		1.0	0.14	ug/L	1
Chlorobenzene	108-90-7	8260B	ND		2.0	0.33	ug/L	1
Chloroethane	75-00-3	8260B	ND		2.0	0.47	ug/L	1
Chloroform	67-66-3	8260B	ND		1.0	0.33	ug/L	1
Chloromethane (Methyl chloride)	74-87-3	8260B	ND		1.0	0.35	ug/L	1
Dibromochloromethane	124-48-1	8260B	ND		1.0	0.33	ug/L	1
1,4-Dichlorobenzene	106-46-7	8260B	ND		1.0	0.33	ug/L	1
1,3-Dichlorobenzene	541-73-1	8260B	ND		1.0	0.33	ug/L	1
1,2-Dichlorobenzene	95-50-1	8260B	ND		1.0	0.33	ug/L	1
1,2-Dichloroethane	107-06-2	8260B	ND		1.0	0.15	ug/L	1
1,1-Dichloroethane	75-34-3	8260B	1.7		1.0	0.13	ug/L	1
trans-1,2-Dichloroethene	156-60-5	8260B	ND		1.0	0.21	ug/L	1
cis-1,2-Dichloroethene	156-59-2	8260B	2.0		1.0	0.12	ug/L	1
1,1-Dichloroethene	75-35-4	8260B	3.0		1.0	0.16	ug/L	1
1,2-Dichloropropane	78-87-5	8260B	ND		1.0	0.19	ug/L	1
trans-1,3-Dichloropropene	10061-02-6	8260B	ND		1.0	0.11	ug/L	1
cis-1,3-Dichloropropene	10061-01-5	8260B	ND		1.0	0.092	ug/L	1
Ethylbenzene	100-41-4	8260B	ND		1.0	0.33	ug/L	1
2-Hexanone	591-78-6	8260B	ND		10	0.27	ug/L	1
Methyl tertiary butyl ether (MTBE)	1634-04-4	8260B	ND		1.0	0.40	ug/L	1
4-Methyl-2-pentanone	108-10-1	8260B	ND		10	0.31	ug/L	1
Methylene chloride	75-09-2	8260B	ND		1.0	0.33	ug/L	1
Styrene	100-42-5	8260B	ND		1.0	0.12	ug/L	1
1,1,2,2-Tetrachloroethane	79-34-5	8260B	ND		1.0	0.16	ug/L	1
Tetrachloroethene	127-18-4	8260B	ND		1.0	0.13	ug/L	1
Toluene	108-88-3	8260B	ND		1.0	0.33	ug/L	1
1,2,4-Trichlorobenzene	120-82-1	8260B	ND		1.0	0.51	ug/L	1
1,1,2-Trichloroethane	79-00-5	8260B	ND		1.0	0.21	ug/L	1
1,1,1-Trichloroethane	71-55-6	8260B	ND		1.0	0.074	ug/L	1
Trichloroethene	79-01-6	8260B	8.7		1.0	0.18	ug/L	1
Vinyl chloride	75-01-4	8260B	ND		1.0	0.054	ug/L	1
Xylenes (total)	1330-20-7	8260B	ND		1.0	0.33	ug/L	1

PQL = Practical quantitation limit
B = Detected in the method blank
E = Quantitation of compound exceeded the calibration range
ND = Not detected at or above the MDL
J = Estimated result < PQL and ≥ MDL
P = The RPD between two GC columns exceeds 40%
Where applicable, all soil sample analysis are reported on a dry weight basis unless flagged with a "W"
N = Recovery is out of criteria
H = Out of holding time

Volatile Organic Compounds by GC/MS

Client: ARCADIS U.S., Inc.
Laboratory ID: MG16005-001
Description: G4MW-052
Matrix: Aqueous
Date Sampled: 07/12/2011 1920
Date Received: 07/16/2011

Surrogate	Q	Run 1 % Recovery	Acceptance Limits
1,2-Dichloroethane-d4		95	70-130
Bromofluorobenzene		118	70-130
Toluene-d8		98	70-130

PQL = Practical quantitation limit
B = Detected in the method blank
E = Quantitation of compound exceeded the calibration range
ND = Not detected at or above the MDL
J = Estimated result < PQL and ≥ MDL
P = The RPD between two GC columns exceeds 40%
Where applicable, all soil sample analysis are reported on a dry weight basis unless flagged with a "W"
N = Recovery is out of criteria
H = Out of holding time

Volatile Organic Compounds by GC/MS

Client: ARCADIS U.S., Inc.
Laboratory ID: MG16005-002
Description: TRIP BLANK
Matrix: Aqueous
Date Sampled: 07/12/2011
Date Received: 07/16/2011

Run	Prep Method	Analytical Method	Dilution	Analysis Date	Analyst	Prep Date	Batch
1	5030B	8260B	1	07/20/2011 1724	BM		64090

Parameter	CAS Number	Analytical Method	Result	Q	PQL	MDL	Units	Run
Acetone	67-64-1	8260B	ND		20	6.7	ug/L	1
Benzene	71-43-2	8260B	ND		1.0	0.13	ug/L	1
Bromodichloromethane	75-27-4	8260B	ND		1.0	0.33	ug/L	1
Bromoform	75-25-2	8260B	ND		1.0	0.66	ug/L	1
Bromomethane (Methyl bromide)	74-83-9	8260B	ND		2.0	0.80	ug/L	1
2-Butanone (MEK)	78-93-3	8260B	ND		10	2.0	ug/L	1
Carbon disulfide	75-15-0	8260B	ND		1.0	0.097	ug/L	1
Carbon tetrachloride	56-23-5	8260B	ND		1.0	0.14	ug/L	1
Chlorobenzene	108-90-7	8260B	ND		2.0	0.33	ug/L	1
Chloroethane	75-00-3	8260B	ND		2.0	0.47	ug/L	1
Chloroform	67-66-3	8260B	ND		1.0	0.33	ug/L	1
Chloromethane (Methyl chloride)	74-87-3	8260B	ND		1.0	0.35	ug/L	1
Dibromochloromethane	124-48-1	8260B	ND		1.0	0.33	ug/L	1
1,4-Dichlorobenzene	106-46-7	8260B	ND		1.0	0.33	ug/L	1
1,3-Dichlorobenzene	541-73-1	8260B	ND		1.0	0.33	ug/L	1
1,2-Dichlorobenzene	95-50-1	8260B	ND		1.0	0.33	ug/L	1
1,2-Dichloroethane	107-06-2	8260B	ND		1.0	0.15	ug/L	1
1,1-Dichloroethane	75-34-3	8260B	ND		1.0	0.13	ug/L	1
trans-1,2-Dichloroethene	156-60-5	8260B	ND		1.0	0.21	ug/L	1
cis-1,2-Dichloroethene	156-59-2	8260B	ND		1.0	0.12	ug/L	1
1,1-Dichloroethene	75-35-4	8260B	ND		1.0	0.16	ug/L	1
1,2-Dichloropropane	78-87-5	8260B	ND		1.0	0.19	ug/L	1
trans-1,3-Dichloropropene	10061-02-6	8260B	ND		1.0	0.11	ug/L	1
cis-1,3-Dichloropropene	10061-01-5	8260B	ND		1.0	0.092	ug/L	1
Ethylbenzene	100-41-4	8260B	ND		1.0	0.33	ug/L	1
2-Hexanone	591-78-6	8260B	ND		10	0.27	ug/L	1
Methyl tertiary butyl ether (MTBE)	1634-04-4	8260B	ND		1.0	0.40	ug/L	1
4-Methyl-2-pentanone	108-10-1	8260B	ND		10	0.31	ug/L	1
Methylene chloride	75-09-2	8260B	ND		1.0	0.33	ug/L	1
Styrene	100-42-5	8260B	ND		1.0	0.12	ug/L	1
1,1,2,2-Tetrachloroethane	79-34-5	8260B	ND		1.0	0.16	ug/L	1
Tetrachloroethene	127-18-4	8260B	ND		1.0	0.13	ug/L	1
Toluene	108-88-3	8260B	0.84	J	1.0	0.33	ug/L	1
1,2,4-Trichlorobenzene	120-82-1	8260B	ND		1.0	0.51	ug/L	1
1,1,2-Trichloroethane	79-00-5	8260B	ND		1.0	0.21	ug/L	1
1,1,1-Trichloroethane	71-55-6	8260B	ND		1.0	0.074	ug/L	1
Trichloroethene	79-01-6	8260B	ND		1.0	0.18	ug/L	1
Vinyl chloride	75-01-4	8260B	ND		1.0	0.054	ug/L	1
Xylenes (total)	1330-20-7	8260B	ND		1.0	0.33	ug/L	1

PQL = Practical quantitation limit
ND = Not detected at or above the MDL
B = Detected in the method blank
J = Estimated result < PQL and ≥ MDL
E = Quantitation of compound exceeded the calibration range
P = The RPD between two GC columns exceeds 40%
Where applicable, all soil sample analysis are reported on a dry weight basis unless flagged with a "W"
N = Recovery is out of criteria
H = Out of holding time

Volatile Organic Compounds by GC/MS

Client: ARCADIS U.S., Inc.	Laboratory ID: MG16005-002
Description: TRIP BLANK	Matrix: Aqueous
Date Sampled: 07/12/2011	
Date Received: 07/16/2011	

Surrogate	Q	Run 1 % Recovery	Acceptance Limits
1,2-Dichloroethane-d4		98	70-130
Bromofluorobenzene		118	70-130
Toluene-d8		97	70-130

PQL = Practical quantitation limit
ND = Not detected at or above the MDL
Where applicable, all soil sample analysis are reported on a dry weight basis unless flagged with a "W"
B = Detected in the method blank
J = Estimated result < PQL and ≥ MDL
E = Quantitation of compound exceeded the calibration range
P = The RPD between two GC columns exceeds 40%
N = Recovery is out of criteria
H = Out of holding time

QC Summary

Volatile Organic Compounds by GC/MS - MB

Sample ID: MQ64090-001
Batch: 64090
Analytical Method: 8260B

Matrix: Aqueous
Prep Method: 5030B

Parameter	Result	Q	Dil	PQL	MDL	Units	Analysis Date
Acetone	ND		1	20	6.7	ug/L	07/20/2011 1105
Benzene	ND		1	1.0	0.13	ug/L	07/20/2011 1105
Bromodichloromethane	ND		1	1.0	0.33	ug/L	07/20/2011 1105
Bromoform	ND		1	1.0	0.66	ug/L	07/20/2011 1105
Bromomethane (Methyl bromide)	ND		1	2.0	0.80	ug/L	07/20/2011 1105
2-Butanone (MEK)	ND		1	10	2.0	ug/L	07/20/2011 1105
Carbon disulfide	ND		1	1.0	0.097	ug/L	07/20/2011 1105
Carbon tetrachloride	ND		1	1.0	0.14	ug/L	07/20/2011 1105
Chlorobenzene	ND		1	2.0	0.33	ug/L	07/20/2011 1105
Chloroethane	ND		1	2.0	0.47	ug/L	07/20/2011 1105
Chloroform	ND		1	1.0	0.33	ug/L	07/20/2011 1105
Chloromethane (Methyl chloride)	ND		1	1.0	0.35	ug/L	07/20/2011 1105
Dibromochloromethane	ND		1	1.0	0.33	ug/L	07/20/2011 1105
1,3-Dichlorobenzene	ND		1	1.0	0.33	ug/L	07/20/2011 1105
1,4-Dichlorobenzene	ND		1	1.0	0.33	ug/L	07/20/2011 1105
1,2-Dichlorobenzene	ND		1	1.0	0.33	ug/L	07/20/2011 1105
1,2-Dichloroethane	ND		1	1.0	0.15	ug/L	07/20/2011 1105
1,1-Dichloroethane	ND		1	1.0	0.13	ug/L	07/20/2011 1105
cis-1,2-Dichloroethene	ND		1	1.0	0.12	ug/L	07/20/2011 1105
trans-1,2-Dichloroethene	ND		1	1.0	0.21	ug/L	07/20/2011 1105
1,1-Dichloroethene	ND		1	1.0	0.16	ug/L	07/20/2011 1105
1,2-Dichloropropane	ND		1	1.0	0.19	ug/L	07/20/2011 1105
trans-1,3-Dichloropropene	ND		1	1.0	0.11	ug/L	07/20/2011 1105
cis-1,3-Dichloropropene	ND		1	1.0	0.092	ug/L	07/20/2011 1105
Ethylbenzene	ND		1	1.0	0.33	ug/L	07/20/2011 1105
2-Hexanone	ND		1	10	0.27	ug/L	07/20/2011 1105
Methyl tertiary butyl ether (MTBE)	ND		1	1.0	0.40	ug/L	07/20/2011 1105
4-Methyl-2-pentanone	ND		1	10	0.31	ug/L	07/20/2011 1105
Methylene chloride	ND		1	1.0	0.33	ug/L	07/20/2011 1105
Styrene	ND		1	1.0	0.12	ug/L	07/20/2011 1105
1,1,2,2-Tetrachloroethane	ND		1	1.0	0.16	ug/L	07/20/2011 1105
Tetrachloroethene	ND		1	1.0	0.13	ug/L	07/20/2011 1105
Toluene	ND		1	1.0	0.33	ug/L	07/20/2011 1105
1,2,4-Trichlorobenzene	ND		1	1.0	0.51	ug/L	07/20/2011 1105
1,1,1-Trichloroethane	ND		1	1.0	0.074	ug/L	07/20/2011 1105
1,1,2-Trichloroethane	ND		1	1.0	0.21	ug/L	07/20/2011 1105
Trichloroethene	ND		1	1.0	0.18	ug/L	07/20/2011 1105
Vinyl chloride	ND		1	1.0	0.054	ug/L	07/20/2011 1105
Xylenes (total)	ND		1	1.0	0.33	ug/L	07/20/2011 1105

Surrogate	Q	% Rec	Acceptance Limit
Bromofluorobenzene		96	70-130
1,2-Dichloroethane-d4		98	70-130
Toluene-d8		97	70-130

PQL = Practical quantitation limit
ND = Not detected at or above the MDL
P = The RPD between two GC columns exceeds 40%
J = Estimated result < PQL and ≥ MDL
N - Recovery is out of criteria
+ - RPD is out of criteria

Where applicable, all soil sample analysis are reported on a dry weight basis unless flagged with a "W"

Note: Calculations are performed before rounding to avoid round-off errors in calculated results

Volatile Organic Compounds by GC/MS - LCS

Sample ID: MQ64090-002
Batch: 64090
Analytical Method: 8260B

Matrix: Aqueous
Prep Method: 5030B

Parameter	Spike Amount (ug/L)	Result (ug/L)	Q	Dil	% Rec	% Rec Limit	Analysis Date
Acetone	100	110		1	107	70-130	07/20/2011 0919
Benzene	50	55		1	111	70-130	07/20/2011 0919
Bromodichloromethane	50	59		1	117	70-130	07/20/2011 0919
Bromoform	50	53		1	105	70-130	07/20/2011 0919
Bromomethane (Methyl bromide)	50	54		1	108	60-140	07/20/2011 0919
2-Butanone (MEK)	100	110		1	113	60-140	07/20/2011 0919
Carbon disulfide	50	46		1	93	60-140	07/20/2011 0919
Carbon tetrachloride	50	58		1	117	70-130	07/20/2011 0919
Chlorobenzene	50	53		1	107	70-130	07/20/2011 0919
Chloroethane	50	62		1	123	42-163	07/20/2011 0919
Chloroform	50	55		1	111	70-130	07/20/2011 0919
Chloromethane (Methyl chloride)	50	62		1	124	70-130	07/20/2011 0919
Dibromochloromethane	50	52		1	103	70-130	07/20/2011 0919
1,3-Dichlorobenzene	50	54		1	108	70-130	07/20/2011 0919
1,4-Dichlorobenzene	50	53		1	106	70-130	07/20/2011 0919
1,2-Dichlorobenzene	50	54		1	108	70-130	07/20/2011 0919
1,2-Dichloroethane	50	57		1	114	70-130	07/20/2011 0919
1,1-Dichloroethane	50	57		1	114	70-130	07/20/2011 0919
cis-1,2-Dichloroethene	50	56		1	112	70-130	07/20/2011 0919
trans-1,2-Dichloroethene	50	54		1	109	70-130	07/20/2011 0919
1,1-Dichloroethene	50	56		1	111	70-130	07/20/2011 0919
1,2-Dichloropropane	50	57		1	113	70-130	07/20/2011 0919
trans-1,3-Dichloropropene	50	60		1	121	70-130	07/20/2011 0919
cis-1,3-Dichloropropene	50	57		1	113	70-130	07/20/2011 0919
Ethylbenzene	50	56		1	113	70-130	07/20/2011 0919
2-Hexanone	100	110		1	112	60-140	07/20/2011 0919
Methyl tertiary butyl ether (MTBE)	50	60		1	119	60-140	07/20/2011 0919
4-Methyl-2-pentanone	100	110		1	114	60-140	07/20/2011 0919
Methylene chloride	50	54		1	109	70-130	07/20/2011 0919
Styrene	50	61		1	121	70-130	07/20/2011 0919
1,1,2,2-Tetrachloroethane	50	57		1	114	60-140	07/20/2011 0919
Tetrachloroethene	50	53		1	106	70-130	07/20/2011 0919
Toluene	50	56		1	112	70-130	07/20/2011 0919
1,2,4-Trichlorobenzene	50	55		1	109	70-130	07/20/2011 0919
1,1,1-Trichloroethane	50	57		1	114	70-130	07/20/2011 0919
1,1,2-Trichloroethane	50	55		1	110	70-130	07/20/2011 0919
Trichloroethene	50	57		1	113	70-130	07/20/2011 0919
Vinyl chloride	50	57		1	113	70-130	07/20/2011 0919
Xylenes (total)	100	120		1	115	70-130	07/20/2011 0919

Surrogate	Q	% Rec	Acceptance Limit
Bromofluorobenzene		101	70-130
1,2-Dichloroethane-d4		105	70-130
Toluene-d8		102	70-130

PQL = Practical quantitation limit
ND = Not detected at or above the MDL
P = The RPD between two GC columns exceeds 40%
J = Estimated result < PQL and ≥ MDL
N - Recovery is out of criteria
+ - RPD is out of criteria

Where applicable, all soil sample analysis are reported on a dry weight basis unless flagged with a "W"

Note: Calculations are performed before rounding to avoid round-off errors in calculated results

Volatile Organic Compounds by GC/MS - LCSD

Sample ID: MQ64090-003
Batch: 64090
Analytical Method: 8260B

Matrix: Aqueous
Prep Method: 5030B

Parameter	Spike Amount (ug/L)	Result (ug/L)	Q	Dil	% Rec	% RPD	% Rec Limit	% RPD Limit	Analysis Date
Acetone	100	110		1	109	1.7	70-130	20	07/20/2011 0941
Benzene	50	54		1	108	2.9	70-130	20	07/20/2011 0941
Bromodichloromethane	50	58		1	115	1.8	70-130	20	07/20/2011 0941
Bromoform	50	51		1	102	3.5	70-130	20	07/20/2011 0941
Bromomethane (Methyl bromide)	50	60		1	121	11	60-140	20	07/20/2011 0941
2-Butanone (MEK)	100	110		1	109	4.2	60-140	20	07/20/2011 0941
Carbon disulfide	50	45		1	91	2.5	60-140	20	07/20/2011 0941
Carbon tetrachloride	50	56		1	112	4.1	70-130	20	07/20/2011 0941
Chlorobenzene	50	52		1	105	2.0	70-130	20	07/20/2011 0941
Chloroethane	50	60		1	120	2.9	42-163	20	07/20/2011 0941
Chloroform	50	54		1	108	2.3	70-130	20	07/20/2011 0941
Chloromethane (Methyl chloride)	50	61		1	122	2.3	70-130	20	07/20/2011 0941
Dibromochloromethane	50	52		1	103	0.33	70-130	20	07/20/2011 0941
1,3-Dichlorobenzene	50	53		1	105	2.7	70-130	20	07/20/2011 0941
1,4-Dichlorobenzene	50	52		1	104	1.6	70-130	20	07/20/2011 0941
1,2-Dichlorobenzene	50	52		1	104	4.4	70-130	20	07/20/2011 0941
1,2-Dichloroethane	50	56		1	112	2.5	70-130	20	07/20/2011 0941
1,1-Dichloroethane	50	57		1	113	0.95	70-130	20	07/20/2011 0941
cis-1,2-Dichloroethene	50	55		1	109	2.7	70-130	20	07/20/2011 0941
trans-1,2-Dichloroethene	50	53		1	106	2.6	70-130	20	07/20/2011 0941
1,1-Dichloroethene	50	54		1	108	3.1	70-130	20	07/20/2011 0941
1,2-Dichloropropane	50	56		1	111	1.5	70-130	20	07/20/2011 0941
trans-1,3-Dichloropropene	50	60		1	119	1.5	70-130	20	07/20/2011 0941
cis-1,3-Dichloropropene	50	55		1	110	3.1	70-130	20	07/20/2011 0941
Ethylbenzene	50	55		1	109	3.4	70-130	20	07/20/2011 0941
2-Hexanone	100	110		1	110	2.1	60-140	20	07/20/2011 0941
Methyl tertiary butyl ether (MTBE)	50	59		1	117	1.6	60-140	20	07/20/2011 0941
4-Methyl-2-pentanone	100	110		1	112	1.9	60-140	20	07/20/2011 0941
Methylene chloride	50	53		1	107	1.9	70-130	20	07/20/2011 0941
Styrene	50	60		1	120	1.5	70-130	20	07/20/2011 0941
1,1,2,2-Tetrachloroethane	50	56		1	112	1.5	60-140	20	07/20/2011 0941
Tetrachloroethene	50	52		1	104	1.4	70-130	20	07/20/2011 0941
Toluene	50	55		1	109	2.5	70-130	20	07/20/2011 0941
1,2,4-Trichlorobenzene	50	52		1	103	5.5	70-130	20	07/20/2011 0941
1,1,1-Trichloroethane	50	55		1	110	2.9	70-130	20	07/20/2011 0941
1,1,2-Trichloroethane	50	54		1	107	2.8	70-130	20	07/20/2011 0941
Trichloroethene	50	55		1	109	3.5	70-130	20	07/20/2011 0941
Vinyl chloride	50	54		1	108	5.3	70-130	20	07/20/2011 0941
Xylenes (total)	100	110		1	114	1.2	70-130	20	07/20/2011 0941

Surrogate	Q	% Rec	Acceptance Limit
Bromofluorobenzene		98	70-130
1,2-Dichloroethane-d4		103	70-130
Toluene-d8		100	70-130

PQL = Practical quantitation limit
ND = Not detected at or above the MDL
P = The RPD between two GC columns exceeds 40%
J = Estimated result < PQL and ≥ MDL
N - Recovery is out of criteria
+ - RPD is out of criteria

Where applicable, all soil sample analysis are reported on a dry weight basis unless flagged with a "W"

Note: Calculations are performed before rounding to avoid round-off errors in calculated results

ARCADIS

Laboratory Task Order No./P.O. No. _____

CHAIN-OF-CUSTODY RECORD

Page 1 of 1

Project Number/Name FST-39(GP09HAFS. F39A. DGOFI

Project Location Ft. Stewart, GA

Laboratory Shealy

Project Manager Shelley Gibbons

Sampler(s)/Affiliation Josh Frizzell/Arcadis

MC, 16 005

ANALYSIS / METHOD / SIZE

Sample ID/Location	Matrix	Date/Time Sampled	Lab ID	VOCs 8260						Remarks	Total
~~G4MW-048~~	~~L~~			~~3~~						Not Sampled	3
G4MW-052	L	7-12-2011/1920		3							3
Trip Blank	L	—		2							2
Temp Blank	L	—	—	—							1

JDF 7-12-2011

Sample Matrix: L = Liquid; S = Solid; A = Air

Total No. of Bottles/Containers 9/6

Relinquished by: [signature]	Organization:	Date 7/15/2011	Time 1200	Seal Intact?
Received by:	Organization:	Date / /	Time	Yes No N/A
Relinquished by: FedEx	Organization:	Date 7/16/11	Time 0850	Seal Intact?
Received by: [signature]	Organization: Shealy	Date 7/16/11	Time 0850	~~Yes~~ No N/A

Special Instructions/Remarks:

Results to Sgibbons@arcadis-us.com, jfrizzell@arcadis-us.com, and afang@arcadis-us.com

Delivery Method: ☐ In Person ☒ Common Carrier Fed EX (SPECIFY) ☐ Lab Courier ☐ Other Temp 1.0 (SPECIFY)

AG 05-12/01

Shealy Environmental Services, Inc.
Document Number: F-AD-016
Revision Number: 8

Page 1 of 1
Replaces Date: 02/23/11
Effective Date: 05/06/11

Sample Receipt Checklist (SRC)

Client: Arcadis Cooler Inspected by/date: [illegible] / 7/16/11 Lot #: MG16005

Means of receipt: ☐ SESI ☐ Client ☐ UPS ☒ FedEx ☐ Airborne Exp ☐ Other

Yes ☒	No ☐		1. Were custody seals present on the cooler?
Yes ☒	No ☐		2. If custody seals were present, were they intact and unbroken?

Cooler ID/temperature upon receipt 1.0 °C / °C / °C / °C / °C / °C / °C / °C

Method: ☐ Temperature Blank ☒ Against Bottles

Method of coolant: ☒ Wet Ice ☐ Blue Ice ☐ Dry Ice ☐ None

If response is No (or Yes for 14, 15, 16), an explanation/resolution must be provided.

Yes ☐	No ☐	NA ☒	3. If temperature of any cooler exceeded 6.0°C, was Project Manager notified? PM notified by SRC, phone, note (circle one), other:_____. (For coolers received via commercial courier, PMs are to be notified immediately.
Yes ☒	No ☐	NA ☐	4. Is the commercial courier's packing slip attached to this form?
Yes ☐	No ☒		5. Were proper custody procedures (relinquished/received) followed?
Yes ☐	No ☒	NA ☐	5a Were samples relinquished by client to commercial courier?
Yes ☒	No ☐		6. Were sample IDs listed?
Yes ☒	No ☐		7. Was collection date & time listed?
Yes ☒	No ☐		8. Were tests to be performed listed on the COC?
Yes ☒	No ☐		9. Did all samples arrive in the proper containers for each test?
Yes ☒	No ☐		10. Did all container label information (ID, date, time) agree with COC?
Yes ☒	No ☐		11. Did all containers arrive in good condition (unbroken, lids on, etc.)?
Yes ☒	No ☐		12. Was adequate sample volume available?
Yes ☐	No ☒		13. Were all samples received within ½ the holding time or 48 hours, whichever comes first?
Yes ☐	No ☒		14. Were any samples containers missing?
Yes ☐	No ☒		15. Were there any excess samples not listed on COC?
Yes ☐	No ☒	NA ☐	16. Were bubbles present >"pea-size" (¼"or 6mm in diameter) in any VOA vials?
Yes ☐	No ☐	NA ☒	17. Were all metals/O&G/HEM/nutrient samples received at a pH of <2?
Yes ☐	No ☐	NA ☒	18. Were all cyanide and/or sulfide samples received at a pH >12?
Yes ☐	No ☐	NA ☒	19. Were all applicable NH3/TKN/cyanide/phenol/BNA/pest/PCB/herb (<0.2mg/L)samples free of residual chlorine?
Yes ☐	No ☐	NA ☒	20. Were collection temperatures documented on the COC for NC samples?

Sample Preservation (Must be completed for any sample(s) incorrectly preserved or with headspace.)

Sample(s)_____were received incorrectly preserved and were adjusted accordingly in sample receiving with _____(H_2SO_4,HNO_3,HCl,NaOH) with the SR # (number) _____.

Sample(s)_____were received with bubbles >6 mm in diameter.

Sample(s)_____were received with TRC >0.2 mg/L for NH3/TKN/cyanide/BNA/pest/PCB/herb.

This portion can be removed for recipient's records.

e 7-15-2011 FedEx Tracking Number 874197703486

ider's me x Josh Frizzell Phone 919 854-1282

Company ARCADIS G & M OF NC INC

Address 801 CORPORATE CENTER DR

Dept/Floor/Suite/Room

RALEIGH State NC ZIP 27607-5243

ur Internal Billing Reference

Corrective Action taken, if necessary:

Was client notified: Yes ☐ No ☐

SESI employee:_____

Comments:_____

Report of Analysis

ARCADIS U.S., Inc.
30 Patewood Drive
Suite 155
Greenville, SC 29615
Attention: Allison Fang

Project Name: Hunter Stewart FST 39

Project Number: GP09HAF.F39A

Lot Number: MI01005

Date Completed: 09/07/2011

Nisreen Saikaly
Project Manager

This report shall not be reproduced, except in its entirety, without the written approval of Shealy Environmental Services, Inc.

The following non-paginated documents are considered part of this report: Chain of Custody Record and Sample Receipt Checklist.

MI01005

Case Narrative
ARCADIS U.S., Inc.
Lot Number: MI01005

This Report of Analysis contains the analytical result(s) for the sample(s) listed on the Sample Summary following this Case Narrative. The sample receiving date is documented in the header information associated with each sample.

All results listed in this report relate only to the samples that are contained within this report.

Sample receipt, sample analysis, and data review have been performed in accordance with the most current approved NELAC standards, the Shealy Environmental Services, Inc. ("Shealy") Quality Assurance Management Plan (QAMP), standard operating procedures (SOPs), and Shealy policies. Any exceptions to the NELAC standards, the QAMP, SOPs or policies are qualified on the results page or discussed below.

Shealy is not NELAC certified for Phosphorus by 365.1 but is certified in SC and NC.

Shealy is not NELAC certified for VPH, but is certified for VPH in NC.

If you have any questions regarding this report please contact the Shealy Project Manager listed on the cover page.

Sample Summary

ARCADIS U.S., Inc.

Lot Number: MI01005

Sample Number	Sample ID	Matrix	Date Sampled	Date Received
001	G4MW055(083011)	Aqueous	08/30/2011 1650	09/01/2011
002	G4MW057(083011)	Aqueous	08/30/2011 1855	09/01/2011
003	G4MW056(083111)	Aqueous	08/31/2011 1150	09/01/2011
004	Trip Blank(083111)	Aqueous	08/31/2011 1150	09/01/2011

(4 samples)

Executive Summary

ARCADIS U.S., Inc.

Lot Number: MI01005

Sample	Sample ID	Matrix	Parameter	Method	Result	Q	Units	Page
001	G4MW055(083011)	Aqueous	Acetone	8260B	10	J	ug/L	5
001	G4MW055(083011)	Aqueous	Carbon disulfide	8260B	0.54	J	ug/L	5
001	G4MW055(083011)	Aqueous	Chloroform	8260B	0.72	J	ug/L	5
001	G4MW055(083011)	Aqueous	cis-1,2-Dichloroethene	8260B	0.13	J	ug/L	5
001	G4MW055(083011)	Aqueous	Tetrachloroethene	8260B	0.25	J	ug/L	5
001	G4MW055(083011)	Aqueous	Trichloroethene	8260B	0.54	J	ug/L	5
002	G4MW057(083011)	Aqueous	cis-1,2-Dichloroethene	8260B	3.2		ug/L	7
002	G4MW057(083011)	Aqueous	Tetrachloroethene	8260B	7.1		ug/L	7
002	G4MW057(083011)	Aqueous	Trichloroethene	8260B	16		ug/L	7
003	G4MW056(083111)	Aqueous	trans-1,2-Dichloroethene	8260B	0.29	J	ug/L	9
003	G4MW056(083111)	Aqueous	cis-1,2-Dichloroethene	8260B	5.8		ug/L	9
003	G4MW056(083111)	Aqueous	1,1-Dichloroethene	8260B	0.21	J	ug/L	9
003	G4MW056(083111)	Aqueous	Tetrachloroethene	8260B	1.0		ug/L	9
003	G4MW056(083111)	Aqueous	Trichloroethene	8260B	21		ug/L	9

(14 detections)

Volatile Organic Compounds by GC/MS

Client: ARCADIS U.S., Inc.
Laboratory ID: MI01005-001
Description: G4MW055(083011)
Matrix: Aqueous
Date Sampled: 08/30/2011 1650
Date Received: 09/01/2011

Run	Prep Method	Analytical Method	Dilution	Analysis Date	Analyst	Prep Date	Batch
1	5030B	8260B	1	09/02/2011 2318	LBS		67034

Parameter	CAS Number	Analytical Method	Result	Q	PQL	MDL	Units	Run
Acetone	67-64-1	8260B	10	J	20	6.7	ug/L	1
Benzene	71-43-2	8260B	ND		1.0	0.13	ug/L	1
Bromodichloromethane	75-27-4	8260B	ND		1.0	0.33	ug/L	1
Bromoform	75-25-2	8260B	ND		1.0	0.66	ug/L	1
Bromomethane (Methyl bromide)	74-83-9	8260B	ND		2.0	0.80	ug/L	1
2-Butanone (MEK)	78-93-3	8260B	ND		10	2.0	ug/L	1
Carbon disulfide	75-15-0	8260B	0.54	J	1.0	0.097	ug/L	1
Carbon tetrachloride	56-23-5	8260B	ND		1.0	0.14	ug/L	1
Chlorobenzene	108-90-7	8260B	ND		2.0	0.33	ug/L	1
Chloroethane	75-00-3	8260B	ND		2.0	0.47	ug/L	1
Chloroform	67-66-3	8260B	0.72	J	1.0	0.33	ug/L	1
Chloromethane (Methyl chloride)	74-87-3	8260B	ND		1.0	0.35	ug/L	1
Dibromochloromethane	124-48-1	8260B	ND		1.0	0.33	ug/L	1
1,4-Dichlorobenzene	106-46-7	8260B	ND		1.0	0.33	ug/L	1
1,3-Dichlorobenzene	541-73-1	8260B	ND		1.0	0.33	ug/L	1
1,2-Dichlorobenzene	95-50-1	8260B	ND		1.0	0.33	ug/L	1
1,2-Dichloroethane	107-06-2	8260B	ND		1.0	0.15	ug/L	1
1,1-Dichloroethane	75-34-3	8260B	ND		1.0	0.13	ug/L	1
trans-1,2-Dichloroethene	156-60-5	8260B	ND		1.0	0.21	ug/L	1
cis-1,2-Dichloroethene	156-59-2	8260B	0.13	J	1.0	0.12	ug/L	1
1,1-Dichloroethene	75-35-4	8260B	ND		1.0	0.16	ug/L	1
1,2-Dichloropropane	78-87-5	8260B	ND		1.0	0.19	ug/L	1
trans-1,3-Dichloropropene	10061-02-6	8260B	ND		1.0	0.11	ug/L	1
cis-1,3-Dichloropropene	10061-01-5	8260B	ND		1.0	0.092	ug/L	1
Ethylbenzene	100-41-4	8260B	ND		1.0	0.33	ug/L	1
2-Hexanone	591-78-6	8260B	ND		10	0.27	ug/L	1
Methyl tertiary butyl ether (MTBE)	1634-04-4	8260B	ND		1.0	0.40	ug/L	1
4-Methyl-2-pentanone	108-10-1	8260B	ND		10	0.31	ug/L	1
Methylene chloride	75-09-2	8260B	ND		1.0	0.33	ug/L	1
Styrene	100-42-5	8260B	ND		1.0	0.12	ug/L	1
1,1,2,2-Tetrachloroethane	79-34-5	8260B	ND		1.0	0.16	ug/L	1
Tetrachloroethene	127-18-4	8260B	0.25	J	1.0	0.13	ug/L	1
Toluene	108-88-3	8260B	ND		1.0	0.33	ug/L	1
1,2,4-Trichlorobenzene	120-82-1	8260B	ND		1.0	0.51	ug/L	1
1,1,2-Trichloroethane	79-00-5	8260B	ND		1.0	0.21	ug/L	1
1,1,1-Trichloroethane	71-55-6	8260B	ND		1.0	0.074	ug/L	1
Trichloroethene	79-01-6	8260B	0.54	J	1.0	0.18	ug/L	1
Vinyl chloride	75-01-4	8260B	ND		1.0	0.054	ug/L	1
Xylenes (total)	1330-20-7	8260B	ND		1.0	0.33	ug/L	1

PQL = Practical quantitation limit
B = Detected in the method blank
E = Quantitation of compound exceeded the calibration range
ND = Not detected at or above the MDL
J = Estimated result < PQL and ≥ MDL
P = The RPD between two GC columns exceeds 40%
Where applicable, all soil sample analysis are reported on a dry weight basis unless flagged with a "W"
N = Recovery is out of criteria
H = Out of holding time

Volatile Organic Compounds by GC/MS

Client: ARCADIS U.S., Inc.
Laboratory ID: MI01005-001
Description: G4MW055(083011)
Matrix: Aqueous
Date Sampled: 08/30/2011 1650
Date Received: 09/01/2011

Surrogate	Q	Run 1 % Recovery	Acceptance Limits
1,2-Dichloroethane-d4		95	70-130
Bromofluorobenzene		103	70-130
Toluene-d8		90	70-130

PQL = Practical quantitation limit
B = Detected in the method blank
E = Quantitation of compound exceeded the calibration range
ND = Not detected at or above the MDL
J = Estimated result < PQL and ≥ MDL
P = The RPD between two GC columns exceeds 40%
Where applicable, all soil sample analysis are reported on a dry weight basis unless flagged with a "W"
N = Recovery is out of criteria
H = Out of holding time

Volatile Organic Compounds by GC/MS

Client: ARCADIS U.S., Inc.
Laboratory ID: MI01005-002
Description: G4MW057(083011)
Matrix: Aqueous
Date Sampled: 08/30/2011 1855
Date Received: 09/01/2011

Run	Prep Method	Analytical Method	Dilution	Analysis Date	Analyst	Prep Date	Batch
1	5030B	8260B	1	09/02/2011 2341	LBS		67034

Parameter	CAS Number	Analytical Method	Result	Q	PQL	MDL	Units	Run
Acetone	67-64-1	8260B	ND		20	6.7	ug/L	1
Benzene	71-43-2	8260B	ND		1.0	0.13	ug/L	1
Bromodichloromethane	75-27-4	8260B	ND		1.0	0.33	ug/L	1
Bromoform	75-25-2	8260B	ND		1.0	0.66	ug/L	1
Bromomethane (Methyl bromide)	74-83-9	8260B	ND		2.0	0.80	ug/L	1
2-Butanone (MEK)	78-93-3	8260B	ND		10	2.0	ug/L	1
Carbon disulfide	75-15-0	8260B	ND		1.0	0.097	ug/L	1
Carbon tetrachloride	56-23-5	8260B	ND		1.0	0.14	ug/L	1
Chlorobenzene	108-90-7	8260B	ND		2.0	0.33	ug/L	1
Chloroethane	75-00-3	8260B	ND		2.0	0.47	ug/L	1
Chloroform	67-66-3	8260B	ND		1.0	0.33	ug/L	1
Chloromethane (Methyl chloride)	74-87-3	8260B	ND		1.0	0.35	ug/L	1
Dibromochloromethane	124-48-1	8260B	ND		1.0	0.33	ug/L	1
1,4-Dichlorobenzene	106-46-7	8260B	ND		1.0	0.33	ug/L	1
1,3-Dichlorobenzene	541-73-1	8260B	ND		1.0	0.33	ug/L	1
1,2-Dichlorobenzene	95-50-1	8260B	ND		1.0	0.33	ug/L	1
1,2-Dichloroethane	107-06-2	8260B	ND		1.0	0.15	ug/L	1
1,1-Dichloroethane	75-34-3	8260B	ND		1.0	0.13	ug/L	1
trans-1,2-Dichloroethene	156-60-5	8260B	ND		1.0	0.21	ug/L	1
cis-1,2-Dichloroethene	156-59-2	8260B	3.2		1.0	0.12	ug/L	1
1,1-Dichloroethene	75-35-4	8260B	ND		1.0	0.16	ug/L	1
1,2-Dichloropropane	78-87-5	8260B	ND		1.0	0.19	ug/L	1
trans-1,3-Dichloropropene	10061-02-6	8260B	ND		1.0	0.11	ug/L	1
cis-1,3-Dichloropropene	10061-01-5	8260B	ND		1.0	0.092	ug/L	1
Ethylbenzene	100-41-4	8260B	ND		1.0	0.33	ug/L	1
2-Hexanone	591-78-6	8260B	ND		10	0.27	ug/L	1
Methyl tertiary butyl ether (MTBE)	1634-04-4	8260B	ND		1.0	0.40	ug/L	1
4-Methyl-2-pentanone	108-10-1	8260B	ND		10	0.31	ug/L	1
Methylene chloride	75-09-2	8260B	ND		1.0	0.33	ug/L	1
Styrene	100-42-5	8260B	ND		1.0	0.12	ug/L	1
1,1,2,2-Tetrachloroethane	79-34-5	8260B	ND		1.0	0.16	ug/L	1
Tetrachloroethene	127-18-4	8260B	7.1		1.0	0.13	ug/L	1
Toluene	108-88-3	8260B	ND		1.0	0.33	ug/L	1
1,2,4-Trichlorobenzene	120-82-1	8260B	ND		1.0	0.51	ug/L	1
1,1,2-Trichloroethane	79-00-5	8260B	ND		1.0	0.21	ug/L	1
1,1,1-Trichloroethane	71-55-6	8260B	ND		1.0	0.074	ug/L	1
Trichloroethene	79-01-6	8260B	16		1.0	0.18	ug/L	1
Vinyl chloride	75-01-4	8260B	ND		1.0	0.054	ug/L	1
Xylenes (total)	1330-20-7	8260B	ND		1.0	0.33	ug/L	1

PQL = Practical quantitation limit
B = Detected in the method blank
E = Quantitation of compound exceeded the calibration range
ND = Not detected at or above the MDL
J = Estimated result < PQL and ≥ MDL
P = The RPD between two GC columns exceeds 40%
Where applicable, all soil sample analysis are reported on a dry weight basis unless flagged with a "W"
N = Recovery is out of criteria
H = Out of holding time

Volatile Organic Compounds by GC/MS

Client: ARCADIS U.S., Inc.
Laboratory ID: MI01005-002
Description: G4MW057(083011)
Matrix: Aqueous
Date Sampled: 08/30/2011 1855
Date Received: 09/01/2011

Surrogate	Q	Run 1 % Recovery	Acceptance Limits
1,2-Dichloroethane-d4		96	70-130
Bromofluorobenzene		103	70-130
Toluene-d8		90	70-130

PQL = Practical quantitation limit
B = Detected in the method blank
E = Quantitation of compound exceeded the calibration range
ND = Not detected at or above the MDL
J = Estimated result < PQL and ≥ MDL
P = The RPD between two GC columns exceeds 40%
Where applicable, all soil sample analysis are reported on a dry weight basis unless flagged with a "W"
N = Recovery is out of criteria
H = Out of holding time

Volatile Organic Compounds by GC/MS

Client: ARCADIS U.S., Inc.
Laboratory ID: MI01005-003
Description: G4MW056(083111)
Matrix: Aqueous
Date Sampled: 08/31/2011 1150
Date Received: 09/01/2011

Run	Prep Method	Analytical Method	Dilution	Analysis Date	Analyst	Prep Date	Batch
1	5030B	8260B	1	09/02/2011 1408	BM		66978

Parameter	CAS Number	Analytical Method	Result	Q	PQL	MDL	Units	Run
Acetone	67-64-1	8260B	ND		20	6.7	ug/L	1
Benzene	71-43-2	8260B	ND		1.0	0.13	ug/L	1
Bromodichloromethane	75-27-4	8260B	ND		1.0	0.33	ug/L	1
Bromoform	75-25-2	8260B	ND		1.0	0.66	ug/L	1
Bromomethane (Methyl bromide)	74-83-9	8260B	ND		2.0	0.80	ug/L	1
2-Butanone (MEK)	78-93-3	8260B	ND		10	2.0	ug/L	1
Carbon disulfide	75-15-0	8260B	ND		1.0	0.097	ug/L	1
Carbon tetrachloride	56-23-5	8260B	ND		1.0	0.14	ug/L	1
Chlorobenzene	108-90-7	8260B	ND		2.0	0.33	ug/L	1
Chloroethane	75-00-3	8260B	ND		2.0	0.47	ug/L	1
Chloroform	67-66-3	8260B	ND		1.0	0.33	ug/L	1
Chloromethane (Methyl chloride)	74-87-3	8260B	ND		1.0	0.35	ug/L	1
Dibromochloromethane	124-48-1	8260B	ND		1.0	0.33	ug/L	1
1,4-Dichlorobenzene	106-46-7	8260B	ND		1.0	0.33	ug/L	1
1,3-Dichlorobenzene	541-73-1	8260B	ND		1.0	0.33	ug/L	1
1,2-Dichlorobenzene	95-50-1	8260B	ND		1.0	0.33	ug/L	1
1,2-Dichloroethane	107-06-2	8260B	ND		1.0	0.15	ug/L	1
1,1-Dichloroethane	75-34-3	8260B	ND		1.0	0.13	ug/L	1
trans-1,2-Dichloroethene	156-60-5	8260B	0.29	J	1.0	0.21	ug/L	1
cis-1,2-Dichloroethene	156-59-2	8260B	5.8		1.0	0.12	ug/L	1
1,1-Dichloroethene	75-35-4	8260B	0.21	J	1.0	0.16	ug/L	1
1,2-Dichloropropane	78-87-5	8260B	ND		1.0	0.19	ug/L	1
trans-1,3-Dichloropropene	10061-02-6	8260B	ND		1.0	0.11	ug/L	1
cis-1,3-Dichloropropene	10061-01-5	8260B	ND		1.0	0.092	ug/L	1
Ethylbenzene	100-41-4	8260B	ND		1.0	0.33	ug/L	1
2-Hexanone	591-78-6	8260B	ND		10	0.27	ug/L	1
Methyl tertiary butyl ether (MTBE)	1634-04-4	8260B	ND		1.0	0.40	ug/L	1
4-Methyl-2-pentanone	108-10-1	8260B	ND		10	0.31	ug/L	1
Methylene chloride	75-09-2	8260B	ND		1.0	0.33	ug/L	1
Styrene	100-42-5	8260B	ND		1.0	0.12	ug/L	1
1,1,2,2-Tetrachloroethane	79-34-5	8260B	ND		1.0	0.16	ug/L	1
Tetrachloroethene	127-18-4	8260B	1.0		1.0	0.13	ug/L	1
Toluene	108-88-3	8260B	ND		1.0	0.33	ug/L	1
1,2,4-Trichlorobenzene	120-82-1	8260B	ND		1.0	0.51	ug/L	1
1,1,2-Trichloroethane	79-00-5	8260B	ND		1.0	0.21	ug/L	1
1,1,1-Trichloroethane	71-55-6	8260B	ND		1.0	0.074	ug/L	1
Trichloroethene	79-01-6	8260B	21		1.0	0.18	ug/L	1
Vinyl chloride	75-01-4	8260B	ND		1.0	0.054	ug/L	1
Xylenes (total)	1330-20-7	8260B	ND		1.0	0.33	ug/L	1

PQL = Practical quantitation limit
B = Detected in the method blank
E = Quantitation of compound exceeded the calibration range
ND = Not detected at or above the MDL
J = Estimated result < PQL and ≥ MDL
P = The RPD between two GC columns exceeds 40%
Where applicable, all soil sample analysis are reported on a dry weight basis unless flagged with a "W"
N = Recovery is out of criteria
H = Out of holding time

Volatile Organic Compounds by GC/MS

Client: ARCADIS U.S., Inc.
Laboratory ID: MI01005-003
Description: G4MW056(083111)
Matrix: Aqueous
Date Sampled: 08/31/2011 1150
Date Received: 09/01/2011

Surrogate	Q	Run 1 % Recovery	Acceptance Limits
1,2-Dichloroethane-d4		106	70-130
Bromofluorobenzene		96	70-130
Toluene-d8		104	70-130

PQL = Practical quantitation limit
B = Detected in the method blank
E = Quantitation of compound exceeded the calibration range
ND = Not detected at or above the MDL
J = Estimated result < PQL and ≥ MDL
P = The RPD between two GC columns exceeds 40%
Where applicable, all soil sample analysis are reported on a dry weight basis unless flagged with a "W"
N = Recovery is out of criteria
H = Out of holding time

Volatile Organic Compounds by GC/MS

Client: ARCADIS U.S., Inc.
Laboratory ID: MI01005-004
Description: Trip Blank(083111)
Matrix: Aqueous
Date Sampled: 08/31/2011 1150
Date Received: 09/01/2011

Run	Prep Method	Analytical Method	Dilution	Analysis Date	Analyst	Prep Date	Batch
1	5030B	8260B	1	09/02/2011 1429	BM		66978

Parameter	CAS Number	Analytical Method	Result	Q	PQL	MDL	Units	Run
Acetone	67-64-1	8260B	ND		20	6.7	ug/L	1
Benzene	71-43-2	8260B	ND		1.0	0.13	ug/L	1
Bromodichloromethane	75-27-4	8260B	ND		1.0	0.33	ug/L	1
Bromoform	75-25-2	8260B	ND		1.0	0.66	ug/L	1
Bromomethane (Methyl bromide)	74-83-9	8260B	ND		2.0	0.80	ug/L	1
2-Butanone (MEK)	78-93-3	8260B	ND		10	2.0	ug/L	1
Carbon disulfide	75-15-0	8260B	ND		1.0	0.097	ug/L	1
Carbon tetrachloride	56-23-5	8260B	ND		1.0	0.14	ug/L	1
Chlorobenzene	108-90-7	8260B	ND		2.0	0.33	ug/L	1
Chloroethane	75-00-3	8260B	ND		2.0	0.47	ug/L	1
Chloroform	67-66-3	8260B	ND		1.0	0.33	ug/L	1
Chloromethane (Methyl chloride)	74-87-3	8260B	ND		1.0	0.35	ug/L	1
Dibromochloromethane	124-48-1	8260B	ND		1.0	0.33	ug/L	1
1,4-Dichlorobenzene	106-46-7	8260B	ND		1.0	0.33	ug/L	1
1,3-Dichlorobenzene	541-73-1	8260B	ND		1.0	0.33	ug/L	1
1,2-Dichlorobenzene	95-50-1	8260B	ND		1.0	0.33	ug/L	1
1,2-Dichloroethane	107-06-2	8260B	ND		1.0	0.15	ug/L	1
1,1-Dichloroethane	75-34-3	8260B	ND		1.0	0.13	ug/L	1
trans-1,2-Dichloroethene	156-60-5	8260B	ND		1.0	0.21	ug/L	1
cis-1,2-Dichloroethene	156-59-2	8260B	ND		1.0	0.12	ug/L	1
1,1-Dichloroethene	75-35-4	8260B	ND		1.0	0.16	ug/L	1
1,2-Dichloropropane	78-87-5	8260B	ND		1.0	0.19	ug/L	1
trans-1,3-Dichloropropene	10061-02-6	8260B	ND		1.0	0.11	ug/L	1
cis-1,3-Dichloropropene	10061-01-5	8260B	ND		1.0	0.092	ug/L	1
Ethylbenzene	100-41-4	8260B	ND		1.0	0.33	ug/L	1
2-Hexanone	591-78-6	8260B	ND		10	0.27	ug/L	1
Methyl tertiary butyl ether (MTBE)	1634-04-4	8260B	ND		1.0	0.40	ug/L	1
4-Methyl-2-pentanone	108-10-1	8260B	ND		10	0.31	ug/L	1
Methylene chloride	75-09-2	8260B	ND		1.0	0.33	ug/L	1
Styrene	100-42-5	8260B	ND		1.0	0.12	ug/L	1
1,1,2,2-Tetrachloroethane	79-34-5	8260B	ND		1.0	0.16	ug/L	1
Tetrachloroethene	127-18-4	8260B	ND		1.0	0.13	ug/L	1
Toluene	108-88-3	8260B	ND		1.0	0.33	ug/L	1
1,2,4-Trichlorobenzene	120-82-1	8260B	ND		1.0	0.51	ug/L	1
1,1,2-Trichloroethane	79-00-5	8260B	ND		1.0	0.21	ug/L	1
1,1,1-Trichloroethane	71-55-6	8260B	ND		1.0	0.074	ug/L	1
Trichloroethene	79-01-6	8260B	ND		1.0	0.18	ug/L	1
Vinyl chloride	75-01-4	8260B	ND		1.0	0.054	ug/L	1
Xylenes (total)	1330-20-7	8260B	ND		1.0	0.33	ug/L	1

PQL = Practical quantitation limit
B = Detected in the method blank
E = Quantitation of compound exceeded the calibration range
ND = Not detected at or above the MDL
J = Estimated result < PQL and ≥ MDL
P = The RPD between two GC columns exceeds 40%
Where applicable, all soil sample analysis are reported on a dry weight basis unless flagged with a "W"
N = Recovery is out of criteria
H = Out of holding time

Volatile Organic Compounds by GC/MS

Client: ARCADIS U.S., Inc.
Laboratory ID: MI01005-004
Description: Trip Blank(083111)
Matrix: Aqueous
Date Sampled: 08/31/2011 1150
Date Received: 09/01/2011

Surrogate	Q	Run 1 % Recovery	Acceptance Limits
1,2-Dichloroethane-d4		109	70-130
Bromofluorobenzene		97	70-130
Toluene-d8		106	70-130

PQL = Practical quantitation limit
B = Detected in the method blank
E = Quantitation of compound exceeded the calibration range
ND = Not detected at or above the MDL
J = Estimated result < PQL and ≥ MDL
P = The RPD between two GC columns exceeds 40%
Where applicable, all soil sample analysis are reported on a dry weight basis unless flagged with a "W"
N = Recovery is out of criteria
H = Out of holding time

QC Summary

Volatile Organic Compounds by GC/MS - MB

Sample ID: MQ66978-001
Batch: 66978
Analytical Method: 8260B

Matrix: Aqueous
Prep Method: 5030B

Parameter	Result	Q	Dil	PQL	MDL	Units	Analysis Date
Acetone	ND		1	20	6.7	ug/L	09/02/2011 1013
Benzene	ND		1	1.0	0.13	ug/L	09/02/2011 1013
Bromodichloromethane	ND		1	1.0	0.33	ug/L	09/02/2011 1013
Bromoform	ND		1	1.0	0.66	ug/L	09/02/2011 1013
Bromomethane (Methyl bromide)	ND		1	2.0	0.80	ug/L	09/02/2011 1013
2-Butanone (MEK)	ND		1	10	2.0	ug/L	09/02/2011 1013
Carbon disulfide	ND		1	1.0	0.097	ug/L	09/02/2011 1013
Carbon tetrachloride	ND		1	1.0	0.14	ug/L	09/02/2011 1013
Chlorobenzene	ND		1	2.0	0.33	ug/L	09/02/2011 1013
Chloroethane	ND		1	2.0	0.47	ug/L	09/02/2011 1013
Chloroform	ND		1	1.0	0.33	ug/L	09/02/2011 1013
Chloromethane (Methyl chloride)	ND		1	1.0	0.35	ug/L	09/02/2011 1013
Dibromochloromethane	ND		1	1.0	0.33	ug/L	09/02/2011 1013
1,3-Dichlorobenzene	ND		1	1.0	0.33	ug/L	09/02/2011 1013
1,2-Dichlorobenzene	ND		1	1.0	0.33	ug/L	09/02/2011 1013
1,4-Dichlorobenzene	ND		1	1.0	0.33	ug/L	09/02/2011 1013
1,2-Dichloroethane	ND		1	1.0	0.15	ug/L	09/02/2011 1013
1,1-Dichloroethane	ND		1	1.0	0.13	ug/L	09/02/2011 1013
trans-1,2-Dichloroethene	ND		1	1.0	0.21	ug/L	09/02/2011 1013
1,1-Dichloroethene	ND		1	1.0	0.16	ug/L	09/02/2011 1013
cis-1,2-Dichloroethene	ND		1	1.0	0.12	ug/L	09/02/2011 1013
1,2-Dichloropropane	ND		1	1.0	0.19	ug/L	09/02/2011 1013
cis-1,3-Dichloropropene	ND		1	1.0	0.092	ug/L	09/02/2011 1013
trans-1,3-Dichloropropene	ND		1	1.0	0.11	ug/L	09/02/2011 1013
Ethylbenzene	ND		1	1.0	0.33	ug/L	09/02/2011 1013
2-Hexanone	ND		1	10	0.27	ug/L	09/02/2011 1013
Methyl tertiary butyl ether (MTBE)	ND		1	1.0	0.40	ug/L	09/02/2011 1013
4-Methyl-2-pentanone	ND		1	10	0.31	ug/L	09/02/2011 1013
Methylene chloride	ND		1	1.0	0.33	ug/L	09/02/2011 1013
Styrene	ND		1	1.0	0.12	ug/L	09/02/2011 1013
1,1,2,2-Tetrachloroethane	ND		1	1.0	0.16	ug/L	09/02/2011 1013
Tetrachloroethene	ND		1	1.0	0.13	ug/L	09/02/2011 1013
Toluene	ND		1	1.0	0.33	ug/L	09/02/2011 1013
1,2,4-Trichlorobenzene	ND		1	1.0	0.51	ug/L	09/02/2011 1013
1,1,2-Trichloroethane	ND		1	1.0	0.21	ug/L	09/02/2011 1013
1,1,1-Trichloroethane	ND		1	1.0	0.074	ug/L	09/02/2011 1013
Trichloroethene	ND		1	1.0	0.18	ug/L	09/02/2011 1013
Vinyl chloride	ND		1	1.0	0.054	ug/L	09/02/2011 1013
Xylenes (total)	ND		1	1.0	0.33	ug/L	09/02/2011 1013

Surrogate	Q	% Rec	Acceptance Limit
Bromofluorobenzene		97	70-130
1,2-Dichloroethane-d4		108	70-130
Toluene-d8		105	70-130

PQL = Practical quantitation limit
ND = Not detected at or above the MDL
P = The RPD between two GC columns exceeds 40%
J = Estimated result < PQL and ≥ MDL
N - Recovery is out of criteria
+ - RPD is out of criteria

Where applicable, all soil sample analysis are reported on a dry weight basis unless flagged with a "W"

Note: Calculations are performed before rounding to avoid round-off errors in calculated results

Volatile Organic Compounds by GC/MS - LCS

Sample ID: MQ66978-002
Batch: 66978
Analytical Method: 8260B

Matrix: Aqueous
Prep Method: 5030B

Parameter	Spike Amount (ug/L)	Result (ug/L)	Q	Dil	% Rec	% Rec Limit	Analysis Date
Acetone	100	120		1	117	70-130	09/02/2011 0848
Benzene	50	52		1	104	70-130	09/02/2011 0848
Bromodichloromethane	50	56		1	111	70-130	09/02/2011 0848
Bromoform	50	43		1	86	70-130	09/02/2011 0848
Bromomethane (Methyl bromide)	50	55		1	109	60-140	09/02/2011 0848
2-Butanone (MEK)	100	120		1	123	60-140	09/02/2011 0848
Carbon disulfide	50	53		1	105	60-140	09/02/2011 0848
Carbon tetrachloride	50	60		1	121	70-130	09/02/2011 0848
Chlorobenzene	50	46		1	93	70-130	09/02/2011 0848
Chloroethane	50	54		1	108	42-163	09/02/2011 0848
Chloroform	50	54		1	109	70-130	09/02/2011 0848
Chloromethane (Methyl chloride)	50	59		1	118	70-130	09/02/2011 0848
Dibromochloromethane	50	45		1	89	70-130	09/02/2011 0848
1,3-Dichlorobenzene	50	46		1	93	70-130	09/02/2011 0848
1,2-Dichlorobenzene	50	47		1	95	70-130	09/02/2011 0848
1,4-Dichlorobenzene	50	45		1	91	70-130	09/02/2011 0848
1,2-Dichloroethane	50	56		1	112	70-130	09/02/2011 0848
1,1-Dichloroethane	50	54		1	107	70-130	09/02/2011 0848
trans-1,2-Dichloroethene	50	53		1	106	70-130	09/02/2011 0848
1,1-Dichloroethene	50	52		1	103	70-130	09/02/2011 0848
cis-1,2-Dichloroethene	50	54		1	109	70-130	09/02/2011 0848
1,2-Dichloropropane	50	52		1	105	70-130	09/02/2011 0848
cis-1,3-Dichloropropene	50	51		1	101	70-130	09/02/2011 0848
trans-1,3-Dichloropropene	50	46		1	92	70-130	09/02/2011 0848
Ethylbenzene	50	49		1	98	70-130	09/02/2011 0848
2-Hexanone	100	110		1	112	60-140	09/02/2011 0848
Methyl tertiary butyl ether (MTBE)	50	57		1	113	70-130	09/02/2011 0848
4-Methyl-2-pentanone	100	120		1	125	60-140	09/02/2011 0848
Methylene chloride	50	51		1	101	70-130	09/02/2011 0848
Styrene	50	48		1	97	70-130	09/02/2011 0848
1,1,2,2-Tetrachloroethane	50	50		1	99	60-140	09/02/2011 0848
Tetrachloroethene	50	47		1	94	70-130	09/02/2011 0848
Toluene	50	52		1	103	70-130	09/02/2011 0848
1,2,4-Trichlorobenzene	50	49		1	98	70-130	09/02/2011 0848
1,1,2-Trichloroethane	50	47		1	95	70-130	09/02/2011 0848
1,1,1-Trichloroethane	50	58		1	116	70-130	09/02/2011 0848
Trichloroethene	50	52		1	104	70-130	09/02/2011 0848
Vinyl chloride	50	60		1	120	70-130	09/02/2011 0848
Xylenes (total)	100	100		1	100	70-130	09/02/2011 0848

Surrogate	Q	% Rec	Acceptance Limit
Bromofluorobenzene		98	70-130
1,2-Dichloroethane-d4		108	70-130
Toluene-d8		106	70-130

PQL = Practical quantitation limit
ND = Not detected at or above the MDL
P = The RPD between two GC columns exceeds 40%
J = Estimated result < PQL and ≥ MDL
N - Recovery is out of criteria
+ - RPD is out of criteria

Where applicable, all soil sample analysis are reported on a dry weight basis unless flagged with a "W"

Note: Calculations are performed before rounding to avoid round-off errors in calculated results

Volatile Organic Compounds by GC/MS - LCSD

Sample ID: MQ66978-003
Batch: 66978
Analytical Method: 8260B

Matrix: Aqueous
Prep Method: 5030B

Parameter	Spike Amount (ug/L)	Result (ug/L)	Q	Dil	% Rec	% RPD	% Rec Limit	% RPD Limit	Analysis Date
Acetone	100	120		1	120	2.3	70-130	20	09/02/2011 0909
Benzene	50	51		1	101	2.5	70-130	20	09/02/2011 0909
Bromodichloromethane	50	55		1	110	1.2	70-130	20	09/02/2011 0909
Bromoform	50	42		1	84	2.0	70-130	20	09/02/2011 0909
Bromomethane (Methyl bromide)	50	54		1	108	0.78	60-140	20	09/02/2011 0909
2-Butanone (MEK)	100	120		1	124	0.53	60-140	20	09/02/2011 0909
Carbon disulfide	50	51		1	102	2.6	60-140	20	09/02/2011 0909
Carbon tetrachloride	50	59		1	119	1.7	70-130	20	09/02/2011 0909
Chlorobenzene	50	45		1	91	2.4	70-130	20	09/02/2011 0909
Chloroethane	50	53		1	107	0.93	42-163	20	09/02/2011 0909
Chloroform	50	53		1	107	2.3	70-130	20	09/02/2011 0909
Chloromethane (Methyl chloride)	50	57		1	114	3.4	70-130	20	09/02/2011 0909
Dibromochloromethane	50	44		1	87	2.0	70-130	20	09/02/2011 0909
1,3-Dichlorobenzene	50	45		1	91	2.0	70-130	20	09/02/2011 0909
1,2-Dichlorobenzene	50	46		1	93	2.4	70-130	20	09/02/2011 0909
1,4-Dichlorobenzene	50	45		1	89	1.7	70-130	20	09/02/2011 0909
1,2-Dichloroethane	50	55		1	110	1.5	70-130	20	09/02/2011 0909
1,1-Dichloroethane	50	53		1	106	1.6	70-130	20	09/02/2011 0909
trans-1,2-Dichloroethene	50	52		1	104	1.2	70-130	20	09/02/2011 0909
1,1-Dichloroethene	50	51		1	102	1.0	70-130	20	09/02/2011 0909
cis-1,2-Dichloroethene	50	54		1	107	1.5	70-130	20	09/02/2011 0909
1,2-Dichloropropane	50	51		1	102	2.4	70-130	20	09/02/2011 0909
cis-1,3-Dichloropropene	50	50		1	100	1.5	70-130	20	09/02/2011 0909
trans-1,3-Dichloropropene	50	46		1	93	0.22	70-130	20	09/02/2011 0909
Ethylbenzene	50	47		1	95	2.9	70-130	20	09/02/2011 0909
2-Hexanone	100	110		1	112	0.63	60-140	20	09/02/2011 0909
Methyl tertiary butyl ether (MTBE)	50	57		1	114	0.29	70-130	20	09/02/2011 0909
4-Methyl-2-pentanone	100	120		1	124	0.49	60-140	20	09/02/2011 0909
Methylene chloride	50	50		1	99	2.2	70-130	20	09/02/2011 0909
Styrene	50	47		1	95	2.3	70-130	20	09/02/2011 0909
1,1,2,2-Tetrachloroethane	50	49		1	99	0.38	60-140	20	09/02/2011 0909
Tetrachloroethene	50	45		1	91	3.3	70-130	20	09/02/2011 0909
Toluene	50	50		1	101	2.5	70-130	20	09/02/2011 0909
1,2,4-Trichlorobenzene	50	48		1	95	2.5	70-130	20	09/02/2011 0909
1,1,2-Trichloroethane	50	46		1	93	2.5	70-130	20	09/02/2011 0909
1,1,1-Trichloroethane	50	57		1	115	1.5	70-130	20	09/02/2011 0909
Trichloroethene	50	51		1	102	1.6	70-130	20	09/02/2011 0909
Vinyl chloride	50	58		1	115	4.4	70-130	20	09/02/2011 0909
Xylenes (total)	100	97		1	97	3.5	70-130	20	09/02/2011 0909

Surrogate	Q	% Rec	Acceptance Limit
Bromofluorobenzene		98	70-130
1,2-Dichloroethane-d4		109	70-130
Toluene-d8		106	70-130

PQL = Practical quantitation limit
ND = Not detected at or above the MDL
P = The RPD between two GC columns exceeds 40%
J = Estimated result < PQL and ≥ MDL
N - Recovery is out of criteria
+ - RPD is out of criteria

Where applicable, all soil sample analysis are reported on a dry weight basis unless flagged with a "W"

Note: Calculations are performed before rounding to avoid round-off errors in calculated results

Volatile Organic Compounds by GC/MS - MB

Sample ID: MQ67034-001
Batch: 67034
Analytical Method: 8260B

Matrix: Aqueous
Prep Method: 5030B

Parameter	Result	Q	Dil	PQL	MDL	Units	Analysis Date
Acetone	ND		1	20	6.7	ug/L	09/02/2011 2206
Benzene	ND		1	1.0	0.13	ug/L	09/02/2011 2206
Bromodichloromethane	ND		1	1.0	0.33	ug/L	09/02/2011 2206
Bromoform	ND		1	1.0	0.66	ug/L	09/02/2011 2206
Bromomethane (Methyl bromide)	ND		1	2.0	0.80	ug/L	09/02/2011 2206
2-Butanone (MEK)	ND		1	10	2.0	ug/L	09/02/2011 2206
Carbon disulfide	ND		1	1.0	0.097	ug/L	09/02/2011 2206
Carbon tetrachloride	ND		1	1.0	0.14	ug/L	09/02/2011 2206
Chlorobenzene	ND		1	2.0	0.33	ug/L	09/02/2011 2206
Chloroethane	ND		1	2.0	0.47	ug/L	09/02/2011 2206
Chloroform	ND		1	1.0	0.33	ug/L	09/02/2011 2206
Chloromethane (Methyl chloride)	ND		1	1.0	0.35	ug/L	09/02/2011 2206
Dibromochloromethane	ND		1	1.0	0.33	ug/L	09/02/2011 2206
1,3-Dichlorobenzene	ND		1	1.0	0.33	ug/L	09/02/2011 2206
1,2-Dichlorobenzene	ND		1	1.0	0.33	ug/L	09/02/2011 2206
1,4-Dichlorobenzene	ND		1	1.0	0.33	ug/L	09/02/2011 2206
1,1-Dichloroethane	ND		1	1.0	0.13	ug/L	09/02/2011 2206
1,2-Dichloroethane	ND		1	1.0	0.15	ug/L	09/02/2011 2206
1,1-Dichloroethene	ND		1	1.0	0.16	ug/L	09/02/2011 2206
cis-1,2-Dichloroethene	ND		1	1.0	0.12	ug/L	09/02/2011 2206
trans-1,2-Dichloroethene	ND		1	1.0	0.21	ug/L	09/02/2011 2206
1,2-Dichloropropane	ND		1	1.0	0.19	ug/L	09/02/2011 2206
cis-1,3-Dichloropropene	ND		1	1.0	0.092	ug/L	09/02/2011 2206
trans-1,3-Dichloropropene	ND		1	1.0	0.11	ug/L	09/02/2011 2206
Ethylbenzene	ND		1	1.0	0.33	ug/L	09/02/2011 2206
2-Hexanone	ND		1	10	0.27	ug/L	09/02/2011 2206
Methyl tertiary butyl ether (MTBE)	ND		1	1.0	0.40	ug/L	09/02/2011 2206
4-Methyl-2-pentanone	ND		1	10	0.31	ug/L	09/02/2011 2206
Methylene chloride	ND		1	1.0	0.33	ug/L	09/02/2011 2206
Styrene	ND		1	1.0	0.12	ug/L	09/02/2011 2206
1,1,2,2-Tetrachloroethane	ND		1	1.0	0.16	ug/L	09/02/2011 2206
Tetrachloroethene	ND		1	1.0	0.13	ug/L	09/02/2011 2206
Toluene	ND		1	1.0	0.33	ug/L	09/02/2011 2206
1,2,4-Trichlorobenzene	ND		1	1.0	0.51	ug/L	09/02/2011 2206
1,1,2-Trichloroethane	ND		1	1.0	0.21	ug/L	09/02/2011 2206
1,1,1-Trichloroethane	ND		1	1.0	0.074	ug/L	09/02/2011 2206
Trichloroethene	ND		1	1.0	0.18	ug/L	09/02/2011 2206
Vinyl chloride	ND		1	1.0	0.054	ug/L	09/02/2011 2206
Xylenes (total)	ND		1	1.0	0.33	ug/L	09/02/2011 2206

Surrogate	Q	% Rec	Acceptance Limit
Bromofluorobenzene		101	70-130
1,2-Dichloroethane-d4		96	70-130
Toluene-d8		93	70-130

PQL = Practical quantitation limit
ND = Not detected at or above the MDL
P = The RPD between two GC columns exceeds 40%
J = Estimated result < PQL and ≥ MDL
N - Recovery is out of criteria
+ - RPD is out of criteria

Where applicable, all soil sample analysis are reported on a dry weight basis unless flagged with a "W"

Note: Calculations are performed before rounding to avoid round-off errors in calculated results

Volatile Organic Compounds by GC/MS - LCS

Sample ID: MQ67034-002
Batch: 67034
Analytical Method: 8260B

Matrix: Aqueous
Prep Method: 5030B

Parameter	Spike Amount (ug/L)	Result (ug/L)	Q	Dil	% Rec	% Rec Limit	Analysis Date
Acetone	100	94		1	94	70-130	09/02/2011 2010
Benzene	50	47		1	93	70-130	09/02/2011 2010
Bromodichloromethane	50	52		1	103	70-130	09/02/2011 2010
Bromoform	50	50		1	100	70-130	09/02/2011 2010
Bromomethane (Methyl bromide)	50	49		1	97	60-140	09/02/2011 2010
2-Butanone (MEK)	100	98		1	98	60-140	09/02/2011 2010
Carbon disulfide	50	44		1	87	60-140	09/02/2011 2010
Carbon tetrachloride	50	50		1	100	70-130	09/02/2011 2010
Chlorobenzene	50	53		1	106	70-130	09/02/2011 2010
Chloroethane	50	50		1	99	42-163	09/02/2011 2010
Chloroform	50	46		1	92	70-130	09/02/2011 2010
Chloromethane (Methyl chloride)	50	51		1	102	70-130	09/02/2011 2010
Dibromochloromethane	50	57		1	115	70-130	09/02/2011 2010
1,3-Dichlorobenzene	50	55		1	109	70-130	09/02/2011 2010
1,2-Dichlorobenzene	50	54		1	108	70-130	09/02/2011 2010
1,4-Dichlorobenzene	50	54		1	108	70-130	09/02/2011 2010
1,1-Dichloroethane	50	46		1	93	70-130	09/02/2011 2010
1,2-Dichloroethane	50	48		1	96	70-130	09/02/2011 2010
1,1-Dichloroethene	50	48		1	97	70-130	09/02/2011 2010
cis-1,2-Dichloroethene	50	47		1	94	70-130	09/02/2011 2010
trans-1,2-Dichloroethene	50	47		1	95	70-130	09/02/2011 2010
1,2-Dichloropropane	50	51		1	101	70-130	09/02/2011 2010
cis-1,3-Dichloropropene	50	53		1	105	70-130	09/02/2011 2010
trans-1,3-Dichloropropene	50	56		1	111	70-130	09/02/2011 2010
Ethylbenzene	50	54		1	109	70-130	09/02/2011 2010
2-Hexanone	100	120		1	119	60-140	09/02/2011 2010
Methyl tertiary butyl ether (MTBE)	50	48		1	96	70-130	09/02/2011 2010
4-Methyl-2-pentanone	100	110		1	110	60-140	09/02/2011 2010
Methylene chloride	50	49		1	98	70-130	09/02/2011 2010
Styrene	50	58		1	116	70-130	09/02/2011 2010
1,1,2,2-Tetrachloroethane	50	56		1	112	60-140	09/02/2011 2010
Tetrachloroethene	50	54		1	107	70-130	09/02/2011 2010
Toluene	50	49		1	98	70-130	09/02/2011 2010
1,2,4-Trichlorobenzene	50	56		1	112	70-130	09/02/2011 2010
1,1,2-Trichloroethane	50	54		1	108	70-130	09/02/2011 2010
1,1,1-Trichloroethane	50	48		1	96	70-130	09/02/2011 2010
Trichloroethene	50	51		1	101	70-130	09/02/2011 2010
Vinyl chloride	50	47		1	95	70-130	09/02/2011 2010
Xylenes (total)	100	110		1	110	70-130	09/02/2011 2010

Surrogate	Q	% Rec	Acceptance Limit
Bromofluorobenzene		101	70-130
1,2-Dichloroethane-d4		94	70-130
Toluene-d8		95	70-130

PQL = Practical quantitation limit
ND = Not detected at or above the MDL
P = The RPD between two GC columns exceeds 40%
J = Estimated result < PQL and ≥ MDL
N - Recovery is out of criteria
+ - RPD is out of criteria

Where applicable, all soil sample analysis are reported on a dry weight basis unless flagged with a "W"

Note: Calculations are performed before rounding to avoid round-off errors in calculated results

Volatile Organic Compounds by GC/MS - LCSD

Sample ID: MQ67034-003
Batch: 67034
Analytical Method: 8260B

Matrix: Aqueous
Prep Method: 5030B

Parameter	Spike Amount (ug/L)	Result (ug/L)	Q	Dil	% Rec	% RPD	% Rec Limit	% RPD Limit	Analysis Date
Acetone	100	92		1	92	1.7	70-130	20	09/02/2011 2033
Benzene	50	46		1	92	1.3	70-130	20	09/02/2011 2033
Bromodichloromethane	50	51		1	102	1.0	70-130	20	09/02/2011 2033
Bromoform	50	49		1	99	1.4	70-130	20	09/02/2011 2033
Bromomethane (Methyl bromide)	50	49		1	98	0.58	60-140	20	09/02/2011 2033
2-Butanone (MEK)	100	96		1	96	2.7	60-140	20	09/02/2011 2033
Carbon disulfide	50	44		1	88	0.42	60-140	20	09/02/2011 2033
Carbon tetrachloride	50	51		1	102	2.1	70-130	20	09/02/2011 2033
Chlorobenzene	50	52		1	105	1.5	70-130	20	09/02/2011 2033
Chloroethane	50	59		1	118	17	42-163	20	09/02/2011 2033
Chloroform	50	46		1	91	1.2	70-130	20	09/02/2011 2033
Chloromethane (Methyl chloride)	50	50		1	100	2.2	70-130	20	09/02/2011 2033
Dibromochloromethane	50	56		1	112	2.9	70-130	20	09/02/2011 2033
1,3-Dichlorobenzene	50	53		1	107	2.1	70-130	20	09/02/2011 2033
1,2-Dichlorobenzene	50	53		1	106	1.8	70-130	20	09/02/2011 2033
1,4-Dichlorobenzene	50	53		1	106	1.9	70-130	20	09/02/2011 2033
1,1-Dichloroethane	50	46		1	92	1.0	70-130	20	09/02/2011 2033
1,2-Dichloroethane	50	47		1	93	3.0	70-130	20	09/02/2011 2033
1,1-Dichloroethene	50	47		1	94	2.8	70-130	20	09/02/2011 2033
cis-1,2-Dichloroethene	50	46		1	93	1.0	70-130	20	09/02/2011 2033
trans-1,2-Dichloroethene	50	47		1	94	1.4	70-130	20	09/02/2011 2033
1,2-Dichloropropane	50	49		1	98	2.9	70-130	20	09/02/2011 2033
cis-1,3-Dichloropropene	50	52		1	104	1.2	70-130	20	09/02/2011 2033
trans-1,3-Dichloropropene	50	55		1	110	0.85	70-130	20	09/02/2011 2033
Ethylbenzene	50	54		1	108	0.83	70-130	20	09/02/2011 2033
2-Hexanone	100	110		1	114	4.6	60-140	20	09/02/2011 2033
Methyl tertiary butyl ether (MTBE)	50	47		1	94	1.9	70-130	20	09/02/2011 2033
4-Methyl-2-pentanone	100	110		1	106	3.6	60-140	20	09/02/2011 2033
Methylene chloride	50	48		1	95	2.9	70-130	20	09/02/2011 2033
Styrene	50	57		1	115	0.95	70-130	20	09/02/2011 2033
1,1,2,2-Tetrachloroethane	50	55		1	109	2.5	60-140	20	09/02/2011 2033
Tetrachloroethene	50	53		1	106	0.97	70-130	20	09/02/2011 2033
Toluene	50	48		1	97	1.0	70-130	20	09/02/2011 2033
1,2,4-Trichlorobenzene	50	55		1	109	2.8	70-130	20	09/02/2011 2033
1,1,2-Trichloroethane	50	53		1	106	2.1	70-130	20	09/02/2011 2033
1,1,1-Trichloroethane	50	48		1	97	0.96	70-130	20	09/02/2011 2033
Trichloroethene	50	50		1	100	1.3	70-130	20	09/02/2011 2033
Vinyl chloride	50	47		1	94	0.91	70-130	20	09/02/2011 2033
Xylenes (total)	100	110		1	109	1.1	70-130	20	09/02/2011 2033

Surrogate	Q	% Rec	Acceptance Limit
Bromofluorobenzene		102	70-130
1,2-Dichloroethane-d4		93	70-130
Toluene-d8		95	70-130

PQL = Practical quantitation limit
ND = Not detected at or above the MDL
P = The RPD between two GC columns exceeds 40%
J = Estimated result < PQL and ≥ MDL
N - Recovery is out of criteria
+ - RPD is out of criteria

Where applicable, all soil sample analysis are reported on a dry weight basis unless flagged with a "W"

Note: Calculations are performed before rounding to avoid round-off errors in calculated results

Shealy Environmental Services, Inc.
106 Vantage Point Drive
West Columbia, South Carolina 29172
Telephone No. (803) 791-9700 Fax No. (803) 791-9111
www.shealylab.com

SHEALY

Chain of Custody Record

Number 03762

Client: Arcadis	Report to Contact: Shelley.Gibbons@arcadis-us.com	Sampler (Printed Name): Chris Tisdale	Quote No.: 14192
Address: 1000 Cobb Place Blvd. Bldg 500A	Telephone No. / Fax No. / Email: 770-428-9009	Waybill No.	Page 1 of 1
City: Kennesaw; State: GA; Zip Code: 30144	Preservative: 1. Unpres. 2. NaOH/ZnA 3. H2SO4 4. HNO3 5. HCL 6. Na Thio. 7. NaOH		
Project Name: Ft. Stewart			
Project Number: GP09HAFS.F39A	P.O Number		

Sample ID / Description (Containers for each sample may be combined on one line)	Date	Time	G=Grab C=Composite	GW	DW	WW	S	Other	Analysis	VOC's	pH/Ignitability	Temp	Remarks / Cooler ID
Number of Containers										3	1		
Bottle (See Instructions on back)										A			
Preservative										5			
Lot No.										MI01005			
G4MW055(083011)	8/30/11	1650	G	X						X			
G4MW057(083011)	8/30/11	1855	G	X						X			
G4MW056(083111)	8/31/11	1150	G	X						X			Sample Event Complete - 8/31/ C.T
~~T.~~	~~8/31/11~~		~~C~~	~~X~~						~~X~~	~~X~~	~~C.T.~~	
Trip Blank (083111)	8/31/11	—				X				X			
Temp. Blank (083111)	8/31/11	—				X						X	

Turn Around Time Required (Prior lab approval required for expedited TAT): X Standard ☐ Rush (Please Specify)

Sample Disposal: ☐ Return to Client X Disposal by Lab

QC Requirements (Specify):

Possible Hazard Identification: ☐Non-Hazard ☐Flammable ☐Skin Irritant ☐Poison X Unknown

1. Relinquished by / Sampler: Chris Tisdale	Date: 8/31/11	Time: 1730	1. Received by	Date	Time
2. Relinquished by	Date	Time	2. Received by	Date	Time
3. Relinquished by	Date	Time	3. Received by	Date	Time
4. Relinquished by: FEDex	Date: 9.1.11	Time: 0940	4. Laboratory Received by:	Date: 9.1.11	Time: 0940

Note: All samples are retained for six weeks from receipt unless other arrangements are made.

LAB USE ONLY
Received on Ice (Check) ☐ Yes ☐ No ☐ Ice Pack Receipt Temp. 3-5 °C Temp. Blank ☐ Y ☐ N
9/1/11

Shealy Environmental Services, Inc.
Document Number: F-AD-016
Revision Number: 8

Page 1 of 1
Replaces Date: 02/23/11
Effective Date: 05/06/11

Sample Receipt Checklist (SRC)

Client: Arcadis Cooler Inspected by/date: ECL 9/1/11 Lot #: MI01005

Means of receipt: ☐ SESI ☐ Client ☐ UPS ☑ FedEx ☐ Airborne Exp ☐ Other			
Yes ☑	No ☐		1. Were custody seals present on the cooler?
Yes ☑	No ☐		2. If custody seals were present, were they intact and unbroken?
Cooler ID/temperature upon receipt 3.5 °C / °C / °C / °C / °C / °C / °C / °C Method: ☑ Temperature Blank ☑ Against Bottles Method of coolant: ☑ Wet Ice ☐ Blue Ice ☐ Dry Ice ☐ None			
If response is No (or Yes for 14, 15, 16), an explanation/resolution must be provided.			
Yes ☐	No ☐	NA ☑	3. If temperature of any cooler exceeded 6.0°C, was Project Manager notified? PM notified by SRC, phone, note (circle one), other:_____. (For coolers received via commercial courier, PMs are to be notified immediately.
Yes ☑	No ☐	NA ☐	4. Is the commercial courier's packing slip attached to this form?
Yes ☑	No ☐		5. Were proper custody procedures (relinquished/received) followed?
Yes ☐	No ☑	NA ☐	5a Were samples relinquished by client to commercial courier?
Yes ☑	No ☐		6. Were sample IDs listed?
Yes ☑	No ☐		7. Was collection date & time listed?
Yes ☑	No ☐		8. Were tests to be performed listed on the COC?
Yes ☑	No ☐		9. Did all samples arrive in the proper containers for each test?
Yes ☑	No ☐		10. Did all container label information (ID, date, time) agree with COC?
Yes ☑	No ☐		11. Did all containers arrive in good condition (unbroken, lids on, etc.)?
Yes ☑	No ☐		12. Was adequate sample volume available?
Yes ☑	No ☐		13. Were all samples received within ½ the holding time or 48 hours, whichever comes first?
Yes ☐	No ☑		14. Were any samples containers missing?
Yes ☐	No ☑		15. Were there any excess samples not listed on COC?
Yes ☐	No ☑	NA ☐	16. Were bubbles present >"pea-size" (¼"or 6mm in diameter) in any VOA vials?
Yes ☐	No ☐	NA ☑	17. Were all metals/O&G/HEM/nutrient samples received at a pH of <2?
Yes ☐	No ☐	NA ☑	18. Were all cyanide and/or sulfide samples received at a pH >12?
Yes ☐	No ☐	NA ☑	19. Were all applicable NH3/TKN/cyanide/phenol/BNA/pest/PCB/herb (<0.2mg/L)samples free of residual chlorine?
Yes ☐	No ☐	NA ☑	20. Were collection temperatures documented on the COC for NC samples?
Sample Preservation (Must be completed for any sample(s) incorrectly preserved or with headspace.)			
Sample(s)_____were received incorrectly preserved and were adjusted accordingly in sample receiving with _____(H_2SO_4,HNO_3,HCl,NaOH) with the SR # (number) _____.			
Sample(s)_____were received with bubbles >6 mm in diameter.			
Sample(s)_____were received with TRC >0.2 mg/L for NH3/TKN/cyanide/BNA/pest/PCB/herb.			

Corrective Action taken, if necessary:

Was client notified: Yes ☐ No ☐ Did client respond: Yes ☐ No ☐

SESI employee:_____ Date of response: _____

Comments:

Report of Analysis

ARCADIS U.S., Inc.
30 Patewood Drive
Suite 155
Greenville, SC 29615
Attention: Allison Fang

Project Name: FST-39 DPT Investigation

Project Number: GP09HAFS.F39A.DG0FI

Lot Number: LI16010

Date Completed: 09/23/2010

Nisreen Saikaly
Project Manager

This report shall not be reproduced, except in its entirety, without the written approval of Shealy Environmental Services, Inc.

The following non-paginated documents are considered part of this report: Chain of Custody Record and Sample Receipt Checklist.

* L I 1 6 0 1 0 *

Case Narrative
ARCADIS U.S., Inc.
Lot Number: LI16010

This Report of Analysis contains the analytical result(s) for the sample(s) listed on the Sample Summary following this Case Narrative. The sample receiving date is documented in the header information associated with each sample.

Sample receipt, sample analysis, and data review have been performed in accordance with the most current approved NELAC standards, the Shealy Environmental Services, Inc. ("Shealy") Quality Assurance Management Plan (QAMP), standard operating procedures (SOPs), and Shealy policies. Any exceptions to the NELAC standards, the QAMP, SOPs or policies are qualified on the results page or discussed below.

If you have any questions regarding this report please contact the Shealy Project Manager listed on the cover page.

Volatile Organic Compounds

The surrogate recovery Toluene-d8 was above the acceptance limit in the LCSD of batch 42683. The LCSD results were within limits. Therefore the associated sample results were reported and no corrective action was required.

Sample Summary
ARCADIS U.S., Inc.
Lot Number: LI16010

Sample Number	Sample ID	Matrix	Date Sampled	Date Received
001	F39TWS13 (30-32)(091410)	Solid	09/14/2010 1555	09/16/2010
002	F39TWS13 (32-34)(091410)	Solid	09/14/2010 1600	09/16/2010
003	F39TWS13 (34-36)(091410)	Solid	09/14/2010 1605	09/16/2010
004	F39TWS13 (36-38)(091410)	Solid	09/14/2010 1610	09/16/2010
005	F39TWS13 (38-40)(091410)	Solid	09/14/2010 1620	09/16/2010
006	F39TWS13 (40-42)(091410)	Solid	09/14/2010 1630	09/16/2010
007	F39TWS13 (42-44)(091410)	Solid	09/14/2010 1640	09/16/2010
008	F39TWS13 (44-46)(091410)	Solid	09/14/2010 1645	09/16/2010
009	F39TWS13 (46-48)(091410)	Solid	09/14/2010 1715	09/16/2010
010	F39TWS13 (48-50)(091410)	Solid	09/14/2010 1720	09/16/2010
011	F39TWS13 (50-52)(091410)	Solid	09/14/2010 1755	09/16/2010
012	F39TWS13 (52-54)(091410)	Solid	09/14/2010 1805	09/16/2010
013	F39TWS13 (54-56)(091410)	Solid	09/14/2010 1825	09/16/2010
014	F39TWS13 (56-58)(091410)	Solid	09/14/2010 1830	09/16/2010
015	F39TWS13 (58-60)(091410)	Solid	09/14/2010 1855	09/16/2010
016	F39TWS13 (60-62)(091410)	Solid	09/14/2010 1900	09/16/2010
017	F39TWS13 (62-64)(091410)	Solid	09/14/2010 1910	09/16/2010
018	F39TWS13 (64-66)(091410)	Solid	09/14/2010 1920	09/16/2010
019	F39TWS13 (66-68)(091410)	Solid	09/14/2010 1925	09/16/2010
020	F39TWS13 (68-70)(091410)	Solid	09/14/2010 1935	09/16/2010

(20 samples)

Executive Summary
ARCADIS U.S., Inc.
Lot Number: LI16010

Sample	Sample ID	Matrix	Parameter	Method	Result	Q	Units	Page
001	F39TWS13 (30-	Solid	Acetone	8260B	55		ug/kg	6
001	F39TWS13 (30-	Solid	2-Butanone (MEK)	8260B	3.2	J	ug/kg	6
002	F39TWS13 (32-	Solid	Acetone	8260B	23		ug/kg	8
002	F39TWS13 (32-	Solid	Carbon disulfide	8260B	1.4	J	ug/kg	8
002	F39TWS13 (32-	Solid	cis-1,2-Dichloroethene	8260B	43		ug/kg	8
002	F39TWS13 (32-	Solid	trans-1,2-Dichloroethene	8260B	9.3		ug/kg	8
002	F39TWS13 (32-	Solid	Tetrachloroethene	8260B	98		ug/kg	8
002	F39TWS13 (32-	Solid	Trichloroethene	8260B	200		ug/kg	9
003	F39TWS13 (34-	Solid	Acetone	8260B	38		ug/kg	10
003	F39TWS13 (34-	Solid	cis-1,2-Dichloroethene	8260B	0.77	J	ug/kg	10
003	F39TWS13 (34-	Solid	Tetrachloroethene	8260B	3.8	J	ug/kg	10
003	F39TWS13 (34-	Solid	Trichloroethene	8260B	3.4	J	ug/kg	11
004	F39TWS13 (36-	Solid	Acetone	8260B	48		ug/kg	12
005	F39TWS13 (38-	Solid	Acetone	8260B	46		ug/kg	14
005	F39TWS13 (38-	Solid	Tetrachloroethene	8260B	2.3	J	ug/kg	14
006	F39TWS13 (40-	Solid	Acetone	8260B	38		ug/kg	16
007	F39TWS13 (42-	Solid	Acetone	8260B	33		ug/kg	18
007	F39TWS13 (42-	Solid	Tetrachloroethene	8260B	0.75	J	ug/kg	18
008	F39TWS13 (44-	Solid	Acetone	8260B	41		ug/kg	20
008	F39TWS13 (44-	Solid	Carbon disulfide	8260B	1.6	J	ug/kg	20
008	F39TWS13 (44-	Solid	cis-1,2-Dichloroethene	8260B	15		ug/kg	20
008	F39TWS13 (44-	Solid	Tetrachloroethene	8260B	16		ug/kg	20
008	F39TWS13 (44-	Solid	Trichloroethene	8260B	90		ug/kg	21
009	F39TWS13 (46-	Solid	Acetone	8260B	34		ug/kg	22
010	F39TWS13 (48-	Solid	Acetone	8260B	47		ug/kg	24
010	F39TWS13 (48-	Solid	Carbon disulfide	8260B	3.7	J	ug/kg	24
010	F39TWS13 (48-	Solid	cis-1,2-Dichloroethene	8260B	10		ug/kg	24
010	F39TWS13 (48-	Solid	trans-1,2-Dichloroethene	8260B	2.5	J	ug/kg	24
010	F39TWS13 (48-	Solid	Tetrachloroethene	8260B	14		ug/kg	24
010	F39TWS13 (48-	Solid	Trichloroethene	8260B	32		ug/kg	25
011	F39TWS13 (50-	Solid	Acetone	8260B	33		ug/kg	26
012	F39TWS13 (52-	Solid	Acetone	8260B	46		ug/kg	28
012	F39TWS13 (52-	Solid	Tetrachloroethene	8260B	1.4	J	ug/kg	28
012	F39TWS13 (52-	Solid	Trichloroethene	8260B	1.9	J	ug/kg	29
013	F39TWS13 (54-	Solid	Acetone	8260B	70		ug/kg	30
013	F39TWS13 (54-	Solid	Carbon disulfide	8260B	6.4		ug/kg	30
013	F39TWS13 (54-	Solid	cis-1,2-Dichloroethene	8260B	65		ug/kg	30
013	F39TWS13 (54-	Solid	Tetrachloroethene	8260B	170	J	ug/kg	30
013	F39TWS13 (54-	Solid	Trichloroethene	8260B	630		ug/kg	31
014	F39TWS13 (56-	Solid	Acetone	8260B	46		ug/kg	32
014	F39TWS13 (56-	Solid	Carbon disulfide	8260B	1.6	J	ug/kg	32
014	F39TWS13 (56-	Solid	cis-1,2-Dichloroethene	8260B	99		ug/kg	32
014	F39TWS13 (56-	Solid	Tetrachloroethene	8260B	180		ug/kg	32
014	F39TWS13 (56-	Solid	Trichloroethene	8260B	240	J	ug/kg	33
015	F39TWS13 (58-	Solid	Acetone	8260B	65		ug/kg	34

Executive Summary (Continued)

Lot Number: LI16010

Sample	Sample ID	Matrix	Parameter	Method	Result	Q	Units	Page
015	F39TWS13 (58-	Solid	Carbon disulfide	8260B	11		ug/kg	34
015	F39TWS13 (58-	Solid	cis-1,2-Dichloroethene	8260B	5.4		ug/kg	34
015	F39TWS13 (58-	Solid	Tetrachloroethene	8260B	2.3	J	ug/kg	34
015	F39TWS13 (58-	Solid	Trichloroethene	8260B	3.7	J	ug/kg	35
016	F39TWS13 (60-	Solid	Acetone	8260B	41		ug/kg	36
017	F39TWS13 (62-	Solid	Acetone	8260B	51		ug/kg	38
017	F39TWS13 (62-	Solid	Carbon disulfide	8260B	3.8	J	ug/kg	38
017	F39TWS13 (62-	Solid	cis-1,2-Dichloroethene	8260B	5.3		ug/kg	38
017	F39TWS13 (62-	Solid	Tetrachloroethene	8260B	41		ug/kg	38
017	F39TWS13 (62-	Solid	Trichloroethene	8260B	35		ug/kg	39
018	F39TWS13 (64-	Solid	Acetone	8260B	55		ug/kg	40
018	F39TWS13 (64-	Solid	Carbon disulfide	8260B	26		ug/kg	40
018	F39TWS13 (64-	Solid	cis-1,2-Dichloroethene	8260B	0.81	J	ug/kg	40
018	F39TWS13 (64-	Solid	Tetrachloroethene	8260B	0.90	J	ug/kg	40
019	F39TWS13 (66-	Solid	Acetone	8260B	41		ug/kg	42
019	F39TWS13 (66-	Solid	Carbon disulfide	8260B	1.7	J	ug/kg	42
020	F39TWS13 (68-	Solid	Acetone	8260B	67		ug/kg	44
020	F39TWS13 (68-	Solid	Carbon disulfide	8260B	7.0		ug/kg	44
020	F39TWS13 (68-	Solid	cis-1,2-Dichloroethene	8260B	12		ug/kg	44
020	F39TWS13 (68-	Solid	Tetrachloroethene	8260B	4.1	J	ug/kg	44
020	F39TWS13 (68-	Solid	Trichloroethene	8260B	37		ug/kg	45

(66 detections)

Volatile Organic Compounds by GC/MS

Client: ARCADIS U.S., Inc.
Laboratory ID: LI16010-001
Description: F39TWS13 (30-32)(091410)
Matrix: Solid
Date Sampled: 09/14/2010 1555
% Solids: 80.7 09/16/2010 1859
Date Received: 09/16/2010

Run	Prep Method	Analytical Method	Dilution	Analysis Date	Analyst	Prep Date	Batch	Sample Wt.(g)
1	5035	8260B	1	09/16/2010 1449	AAE		42544	5.45

Parameter	CAS Number	Analytical Method	Result	Q	PQL	MDL	Units	Run
Acetone	67-64-1	8260B	55		23	7.6	ug/kg	1
Benzene	71-43-2	8260B	ND		5.7	1.3	ug/kg	1
Bromodichloromethane	75-27-4	8260B	ND		5.7	1.9	ug/kg	1
Bromoform	75-25-2	8260B	ND		5.7	0.80	ug/kg	1
Bromomethane (Methyl bromide)	74-83-9	8260B	ND		5.7	2.0	ug/kg	1
2-Butanone (MEK)	78-93-3	8260B	3.2	J	11	2.7	ug/kg	1
Carbon disulfide	75-15-0	8260B	ND		5.7	1.5	ug/kg	1
Carbon tetrachloride	56-23-5	8260B	ND		5.7	2.0	ug/kg	1
Chlorobenzene	108-90-7	8260B	ND		5.7	1.9	ug/kg	1
Chloroethane	75-00-3	8260B	ND		5.7	1.5	ug/kg	1
Chloroform	67-66-3	8260B	ND		5.7	0.94	ug/kg	1
Chloromethane (Methyl chloride)	74-87-3	8260B	ND		5.7	1.1	ug/kg	1
Cyclohexane	110-82-7	8260B	ND		5.7	0.77	ug/kg	1
1,2-Dibromo-3-chloropropane (DBCP)	96-12-8	8260B	ND		5.7	1.7	ug/kg	1
Dibromochloromethane	124-48-1	8260B	ND		5.7	1.9	ug/kg	1
1,2-Dibromoethane (EDB)	106-93-4	8260B	ND		5.7	0.97	ug/kg	1
1,2-Dichlorobenzene	95-50-1	8260B	ND		5.7	1.9	ug/kg	1
1,3-Dichlorobenzene	541-73-1	8260B	ND		5.7	1.9	ug/kg	1
1,4-Dichlorobenzene	106-46-7	8260B	ND		5.7	1.9	ug/kg	1
Dichlorodifluoromethane	75-71-8	8260B	ND		5.7	1.8	ug/kg	1
1,1-Dichloroethane	75-34-3	8260B	ND		5.7	0.83	ug/kg	1
1,2-Dichloroethane	107-06-2	8260B	ND		5.7	1.1	ug/kg	1
1,1-Dichloroethene	75-35-4	8260B	ND		5.7	1.9	ug/kg	1
cis-1,2-Dichloroethene	156-59-2	8260B	ND		5.7	0.86	ug/kg	1
trans-1,2-Dichloroethene	156-60-5	8260B	ND		5.7	1.7	ug/kg	1
1,2-Dichloropropane	78-87-5	8260B	ND		5.7	1.0	ug/kg	1
cis-1,3-Dichloropropene	10061-01-5	8260B	ND		5.7	0.77	ug/kg	1
trans-1,3-Dichloropropene	10061-02-6	8260B	ND		5.7	0.93	ug/kg	1
Ethylbenzene	100-41-4	8260B	ND		5.7	1.9	ug/kg	1
2-Hexanone	591-78-6	8260B	ND		11	1.5	ug/kg	1
Isopropylbenzene	98-82-8	8260B	ND		5.7	0.91	ug/kg	1
Methyl acetate	79-20-9	8260B	ND		5.7	0.76	ug/kg	1
Methyl tertiary butyl ether (MTBE)	1634-04-4	8260B	ND		5.7	0.45	ug/kg	1
4-Methyl-2-pentanone	108-10-1	8260B	ND		11	1.7	ug/kg	1
Methylcyclohexane	108-87-2	8260B	ND		5.7	0.69	ug/kg	1
Methylene chloride	75-09-2	8260B	ND		5.7	3.0	ug/kg	1
Styrene	100-42-5	8260B	ND		5.7	1.3	ug/kg	1
1,1,2,2-Tetrachloroethane	79-34-5	8260B	ND		5.7	0.53	ug/kg	1
Tetrachloroethene	127-18-4	8260B	ND		5.7	0.57	ug/kg	1
Toluene	108-88-3	8260B	ND		5.7	1.9	ug/kg	1
1,1,2-Trichloro-1,2,2-Trifluoroethane	76-13-1	8260B	ND		5.7	2.4	ug/kg	1
1,2,4-Trichlorobenzene	120-82-1	8260B	ND		5.7	1.9	ug/kg	1
1,1,1-Trichloroethane	71-55-6	8260B	ND		5.7	0.97	ug/kg	1
1,1,2-Trichloroethane	79-00-5	8260B	ND		5.7	0.90	ug/kg	1

PQL = Practical quantitation limit
B = Detected in the method blank
E = Quantitation of compound exceeded the calibration range
ND = Not detected at or above the MDL
J = Estimated result < PQL and ≥ MDL
P = The RPD between two GC columns exceeds 40%
Where applicable, all soil sample analysis are reported on a dry weight basis unless flagged with a "W"
N = Recovery is out of criteria
H = Out of holding time

Volatile Organic Compounds by GC/MS

Client: ARCADIS U.S., Inc.	Laboratory ID: LI16010-001
Description: F39TWS13 (30-32)(091410)	Matrix: Solid
Date Sampled: 09/14/2010 1555	% Solids: 80.7 09/16/2010 1859
Date Received: 09/16/2010	

Run	Prep Method	Analytical Method	Dilution	Analysis Date	Analyst	Prep Date	Batch	Sample Wt.(g)
1	5035	8260B	1	09/16/2010 1449	AAE		42544	5.45

Parameter	CAS Number	Analytical Method	Result	Q	PQL	MDL	Units	Run
Trichloroethene	79-01-6	8260B	ND		5.7	2.2	ug/kg	1
Trichlorofluoromethane	75-69-4	8260B	ND		5.7	1.7	ug/kg	1
Vinyl chloride	75-01-4	8260B	ND		5.7	0.98	ug/kg	1
Xylenes (total)	1330-20-7	8260B	ND		5.7	3.3	ug/kg	1

Surrogate	Q	Run 1 % Recovery	Acceptance Limits
1,2-Dichloroethane-d4		81	53-142
Bromofluorobenzene		93	47-138
Toluene-d8		91	68-124

PQL = Practical quantitation limit
ND = Not detected at or above the MDL
Where applicable, all soil sample analysis are reported on a dry weight basis unless flagged with a "W"
B = Detected in the method blank
J = Estimated result < PQL and ≥ MDL
E = Quantitation of compound exceeded the calibration range
P = The RPD between two GC columns exceeds 40%
N = Recovery is out of criteria
H = Out of holding time

Volatile Organic Compounds by GC/MS

Client: ARCADIS U.S., Inc.
Laboratory ID: LI16010-002
Description: F39TWS13 (32-34)(091410)
Matrix: Solid
Date Sampled: 09/14/2010 1600
% Solids: 76.6 09/16/2010 1859
Date Received: 09/16/2010

Run	Prep Method	Analytical Method	Dilution	Analysis Date	Analyst	Prep Date	Batch	Sample Wt.(g)
1	5035	8260B	1	09/16/2010 1732	AAE		42544	6.46

Parameter	CAS Number	Analytical Method	Result	Q	PQL	MDL	Units	Run
Acetone	67-64-1	8260B	23		20	6.8	ug/kg	1
Benzene	71-43-2	8260B	ND		5.0	1.1	ug/kg	1
Bromodichloromethane	75-27-4	8260B	ND		5.0	1.7	ug/kg	1
Bromoform	75-25-2	8260B	ND		5.0	0.71	ug/kg	1
Bromomethane (Methyl bromide)	74-83-9	8260B	ND		5.0	1.8	ug/kg	1
2-Butanone (MEK)	78-93-3	8260B	ND		10	2.4	ug/kg	1
Carbon disulfide	75-15-0	8260B	1.4	J	5.0	1.3	ug/kg	1
Carbon tetrachloride	56-23-5	8260B	ND		5.0	1.8	ug/kg	1
Chlorobenzene	108-90-7	8260B	ND		5.0	1.7	ug/kg	1
Chloroethane	75-00-3	8260B	ND		5.0	1.3	ug/kg	1
Chloroform	67-66-3	8260B	ND		5.0	0.84	ug/kg	1
Chloromethane (Methyl chloride)	74-87-3	8260B	ND		5.0	1.0	ug/kg	1
Cyclohexane	110-82-7	8260B	ND		5.0	0.68	ug/kg	1
1,2-Dibromo-3-chloropropane (DBCP)	96-12-8	8260B	ND		5.0	1.5	ug/kg	1
Dibromochloromethane	124-48-1	8260B	ND		5.0	1.7	ug/kg	1
1,2-Dibromoethane (EDB)	106-93-4	8260B	ND		5.0	0.86	ug/kg	1
1,2-Dichlorobenzene	95-50-1	8260B	ND		5.0	1.7	ug/kg	1
1,3-Dichlorobenzene	541-73-1	8260B	ND		5.0	1.7	ug/kg	1
1,4-Dichlorobenzene	106-46-7	8260B	ND		5.0	1.7	ug/kg	1
Dichlorodifluoromethane	75-71-8	8260B	ND		5.0	1.6	ug/kg	1
1,1-Dichloroethane	75-34-3	8260B	ND		5.0	0.74	ug/kg	1
1,2-Dichloroethane	107-06-2	8260B	ND		5.0	1.0	ug/kg	1
1,1-Dichloroethene	75-35-4	8260B	ND		5.0	1.7	ug/kg	1
cis-1,2-Dichloroethene	156-59-2	8260B	43		5.0	0.77	ug/kg	1
trans-1,2-Dichloroethene	156-60-5	8260B	9.3		5.0	1.5	ug/kg	1
1,2-Dichloropropane	78-87-5	8260B	ND		5.0	0.92	ug/kg	1
cis-1,3-Dichloropropene	10061-01-5	8260B	ND		5.0	0.69	ug/kg	1
trans-1,3-Dichloropropene	10061-02-6	8260B	ND		5.0	0.83	ug/kg	1
Ethylbenzene	100-41-4	8260B	ND		5.0	1.7	ug/kg	1
2-Hexanone	591-78-6	8260B	ND		10	1.3	ug/kg	1
Isopropylbenzene	98-82-8	8260B	ND		5.0	0.81	ug/kg	1
Methyl acetate	79-20-9	8260B	ND		5.0	0.68	ug/kg	1
Methyl tertiary butyl ether (MTBE)	1634-04-4	8260B	ND		5.0	0.40	ug/kg	1
4-Methyl-2-pentanone	108-10-1	8260B	ND		10	1.5	ug/kg	1
Methylcyclohexane	108-87-2	8260B	ND		5.0	0.62	ug/kg	1
Methylene chloride	75-09-2	8260B	ND		5.0	2.6	ug/kg	1
Styrene	100-42-5	8260B	ND		5.0	1.1	ug/kg	1
1,1,2,2-Tetrachloroethane	79-34-5	8260B	ND		5.0	0.47	ug/kg	1
Tetrachloroethene	127-18-4	8260B	98		5.0	0.50	ug/kg	1
Toluene	108-88-3	8260B	ND		5.0	1.7	ug/kg	1
1,1,2-Trichloro-1,2,2-Trifluoroethane	76-13-1	8260B	ND		5.0	2.1	ug/kg	1
1,2,4-Trichlorobenzene	120-82-1	8260B	ND		5.0	1.7	ug/kg	1
1,1,1-Trichloroethane	71-55-6	8260B	ND		5.0	0.86	ug/kg	1
1,1,2-Trichloroethane	79-00-5	8260B	ND		5.0	0.80	ug/kg	1

PQL = Practical quantitation limit
B = Detected in the method blank
E = Quantitation of compound exceeded the calibration range
ND = Not detected at or above the MDL
J = Estimated result < PQL and ≥ MDL
P = The RPD between two GC columns exceeds 40%
Where applicable, all soil sample analysis are reported on a dry weight basis unless flagged with a "W"
N = Recovery is out of criteria
H = Out of holding time

Volatile Organic Compounds by GC/MS

Client: ARCADIS U.S., Inc.	Laboratory ID: LI16010-002
Description: F39TWS13 (32-34)(091410)	Matrix: Solid
Date Sampled: 09/14/2010 1600	% Solids: 76.6 09/16/2010 1859
Date Received: 09/16/2010	

Run	Prep Method	Analytical Method	Dilution	Analysis Date	Analyst	Prep Date	Batch	Sample Wt.(g)
1	5035	8260B	1	09/16/2010 1732	AAE		42544	6.46

Parameter	CAS Number	Analytical Method	Result	Q	PQL	MDL	Units	Run
Trichloroethene	79-01-6	8260B	200		5.0	1.9	ug/kg	1
Trichlorofluoromethane	75-69-4	8260B	ND		5.0	1.5	ug/kg	1
Vinyl chloride	75-01-4	8260B	ND		5.0	0.87	ug/kg	1
Xylenes (total)	1330-20-7	8260B	ND		5.0	2.9	ug/kg	1

Surrogate	Q	Run 1 % Recovery	Acceptance Limits
1,2-Dichloroethane-d4		82	53-142
Bromofluorobenzene		85	47-138
Toluene-d8		92	68-124

PQL = Practical quantitation limit
ND = Not detected at or above the MDL
Where applicable, all soil sample analysis are reported on a dry weight basis unless flagged with a "W"
B = Detected in the method blank
J = Estimated result < PQL and ≥ MDL
E = Quantitation of compound exceeded the calibration range
P = The RPD between two GC columns exceeds 40%
N = Recovery is out of criteria
H = Out of holding time

Volatile Organic Compounds by GC/MS

Client: ARCADIS U.S., Inc.
Laboratory ID: LI16010-003
Description: F39TWS13 (34-36)(091410)
Matrix: Solid
Date Sampled: 09/14/2010 1605
% Solids: 78.3 09/16/2010 1859
Date Received: 09/16/2010

Run	Prep Method	Analytical Method	Dilution	Analysis Date	Analyst	Prep Date	Batch	Sample Wt.(g)
1	5035	8260B	1	09/17/2010 1213	DLB		42596	7.34

Parameter	CAS Number	Analytical Method	Result	Q	PQL	MDL	Units	Run
Acetone	67-64-1	8260B	38		17	5.8	ug/kg	1
Benzene	71-43-2	8260B	ND		4.3	0.96	ug/kg	1
Bromodichloromethane	75-27-4	8260B	ND		4.3	1.5	ug/kg	1
Bromoform	75-25-2	8260B	ND		4.3	0.61	ug/kg	1
Bromomethane (Methyl bromide)	74-83-9	8260B	ND		4.3	1.6	ug/kg	1
2-Butanone (MEK)	78-93-3	8260B	ND		8.7	2.1	ug/kg	1
Carbon disulfide	75-15-0	8260B	ND		4.3	1.1	ug/kg	1
Carbon tetrachloride	56-23-5	8260B	ND		4.3	1.6	ug/kg	1
Chlorobenzene	108-90-7	8260B	ND		4.3	1.5	ug/kg	1
Chloroethane	75-00-3	8260B	ND		4.3	1.1	ug/kg	1
Chloroform	67-66-3	8260B	ND		4.3	0.72	ug/kg	1
Chloromethane (Methyl chloride)	74-87-3	8260B	ND		4.3	0.87	ug/kg	1
Cyclohexane	110-82-7	8260B	ND		4.3	0.59	ug/kg	1
1,2-Dibromo-3-chloropropane (DBCP)	96-12-8	8260B	ND		4.3	1.3	ug/kg	1
Dibromochloromethane	124-48-1	8260B	ND		4.3	1.5	ug/kg	1
1,2-Dibromoethane (EDB)	106-93-4	8260B	ND		4.3	0.74	ug/kg	1
1,2-Dichlorobenzene	95-50-1	8260B	ND		4.3	1.5	ug/kg	1
1,3-Dichlorobenzene	541-73-1	8260B	ND		4.3	1.5	ug/kg	1
1,4-Dichlorobenzene	106-46-7	8260B	ND		4.3	1.5	ug/kg	1
Dichlorodifluoromethane	75-71-8	8260B	ND		4.3	1.4	ug/kg	1
1,1-Dichloroethane	75-34-3	8260B	ND		4.3	0.64	ug/kg	1
1,2-Dichloroethane	107-06-2	8260B	ND		4.3	0.87	ug/kg	1
1,1-Dichloroethene	75-35-4	8260B	ND		4.3	1.5	ug/kg	1
cis-1,2-Dichloroethene	156-59-2	8260B	0.77	J	4.3	0.66	ug/kg	1
trans-1,2-Dichloroethene	156-60-5	8260B	ND		4.3	1.3	ug/kg	1
1,2-Dichloropropane	78-87-5	8260B	ND		4.3	0.79	ug/kg	1
cis-1,3-Dichloropropene	10061-01-5	8260B	ND		4.3	0.59	ug/kg	1
trans-1,3-Dichloropropene	10061-02-6	8260B	ND		4.3	0.71	ug/kg	1
Ethylbenzene	100-41-4	8260B	ND		4.3	1.5	ug/kg	1
2-Hexanone	591-78-6	8260B	ND		8.7	1.1	ug/kg	1
Isopropylbenzene	98-82-8	8260B	ND		4.3	0.70	ug/kg	1
Methyl acetate	79-20-9	8260B	ND		4.3	0.58	ug/kg	1
Methyl tertiary butyl ether (MTBE)	1634-04-4	8260B	ND		4.3	0.35	ug/kg	1
4-Methyl-2-pentanone	108-10-1	8260B	ND		8.7	1.3	ug/kg	1
Methylcyclohexane	108-87-2	8260B	ND		4.3	0.53	ug/kg	1
Methylene chloride	75-09-2	8260B	ND		4.3	2.3	ug/kg	1
Styrene	100-42-5	8260B	ND		4.3	0.96	ug/kg	1
1,1,2,2-Tetrachloroethane	79-34-5	8260B	ND		4.3	0.41	ug/kg	1
Tetrachloroethene	127-18-4	8260B	3.8	J	4.3	0.43	ug/kg	1
Toluene	108-88-3	8260B	ND		4.3	1.5	ug/kg	1
1,1,2-Trichloro-1,2,2-Trifluoroethane	76-13-1	8260B	ND		4.3	1.8	ug/kg	1
1,2,4-Trichlorobenzene	120-82-1	8260B	ND		4.3	1.5	ug/kg	1
1,1,1-Trichloroethane	71-55-6	8260B	ND		4.3	0.74	ug/kg	1
1,1,2-Trichloroethane	79-00-5	8260B	ND		4.3	0.69	ug/kg	1

PQL = Practical quantitation limit
B = Detected in the method blank
E = Quantitation of compound exceeded the calibration range
ND = Not detected at or above the MDL
J = Estimated result < PQL and ≥ MDL
P = The RPD between two GC columns exceeds 40%
Where applicable, all soil sample analysis are reported on a dry weight basis unless flagged with a "W"
N = Recovery is out of criteria
H = Out of holding time

Volatile Organic Compounds by GC/MS

Client: ARCADIS U.S., Inc.	Laboratory ID: LI16010-003
Description: F39TWS13 (34-36)(091410)	Matrix: Solid
Date Sampled: 09/14/2010 1605	% Solids: 78.3 09/16/2010 1859
Date Received: 09/16/2010	

Run	Prep Method	Analytical Method	Dilution	Analysis Date	Analyst	Prep Date	Batch	Sample Wt.(g)
1	5035	8260B	1	09/17/2010 1213	DLB		42596	7.34

Parameter	CAS Number	Analytical Method	Result	Q	PQL	MDL	Units	Run
Trichloroethene	79-01-6	8260B	3.4	J	4.3	1.7	ug/kg	1
Trichlorofluoromethane	75-69-4	8260B	ND		4.3	1.3	ug/kg	1
Vinyl chloride	75-01-4	8260B	ND		4.3	0.75	ug/kg	1
Xylenes (total)	1330-20-7	8260B	ND		4.3	2.5	ug/kg	1

Surrogate	Q	Run 1 % Recovery	Acceptance Limits
1,2-Dichloroethane-d4		77	53-142
Bromofluorobenzene		83	47-138
Toluene-d8		95	68-124

PQL = Practical quantitation limit
ND = Not detected at or above the MDL
Where applicable, all soil sample analysis are reported on a dry weight basis unless flagged with a "W"
B = Detected in the method blank
J = Estimated result < PQL and ≥ MDL
E = Quantitation of compound exceeded the calibration range
P = The RPD between two GC columns exceeds 40%
N = Recovery is out of criteria
H = Out of holding time

Volatile Organic Compounds by GC/MS

Client: ARCADIS U.S., Inc.
Laboratory ID: LI16010-004
Description: F39TWS13 (36-38)(091410)
Matrix: Solid
Date Sampled: 09/14/2010 1610
% Solids: 77.7 09/16/2010 1859
Date Received: 09/16/2010

Run	Prep Method	Analytical Method	Dilution	Analysis Date	Analyst	Prep Date	Batch	Sample Wt.(g)
1	5035	8260B	1	09/16/2010 1536	AAE		42544	4.72

Parameter	CAS Number	Analytical Method	Result	Q	PQL	MDL	Units	Run
Acetone	67-64-1	8260B	48		27	9.1	ug/kg	1
Benzene	71-43-2	8260B	ND		6.8	1.5	ug/kg	1
Bromodichloromethane	75-27-4	8260B	ND		6.8	2.3	ug/kg	1
Bromoform	75-25-2	8260B	ND		6.8	0.95	ug/kg	1
Bromomethane (Methyl bromide)	74-83-9	8260B	ND		6.8	2.5	ug/kg	1
2-Butanone (MEK)	78-93-3	8260B	ND		14	3.3	ug/kg	1
Carbon disulfide	75-15-0	8260B	ND		6.8	1.8	ug/kg	1
Carbon tetrachloride	56-23-5	8260B	ND		6.8	2.5	ug/kg	1
Chlorobenzene	108-90-7	8260B	ND		6.8	2.3	ug/kg	1
Chloroethane	75-00-3	8260B	ND		6.8	1.8	ug/kg	1
Chloroform	67-66-3	8260B	ND		6.8	1.1	ug/kg	1
Chloromethane (Methyl chloride)	74-87-3	8260B	ND		6.8	1.4	ug/kg	1
Cyclohexane	110-82-7	8260B	ND		6.8	0.92	ug/kg	1
1,2-Dibromo-3-chloropropane (DBCP)	96-12-8	8260B	ND		6.8	2.0	ug/kg	1
Dibromochloromethane	124-48-1	8260B	ND		6.8	2.3	ug/kg	1
1,2-Dibromoethane (EDB)	106-93-4	8260B	ND		6.8	1.2	ug/kg	1
1,2-Dichlorobenzene	95-50-1	8260B	ND		6.8	2.3	ug/kg	1
1,3-Dichlorobenzene	541-73-1	8260B	ND		6.8	2.3	ug/kg	1
1,4-Dichlorobenzene	106-46-7	8260B	ND		6.8	2.3	ug/kg	1
Dichlorodifluoromethane	75-71-8	8260B	ND		6.8	2.2	ug/kg	1
1,1-Dichloroethane	75-34-3	8260B	ND		6.8	1.0	ug/kg	1
1,2-Dichloroethane	107-06-2	8260B	ND		6.8	1.4	ug/kg	1
1,1-Dichloroethene	75-35-4	8260B	ND		6.8	2.3	ug/kg	1
cis-1,2-Dichloroethene	156-59-2	8260B	ND		6.8	1.0	ug/kg	1
trans-1,2-Dichloroethene	156-60-5	8260B	ND		6.8	2.0	ug/kg	1
1,2-Dichloropropane	78-87-5	8260B	ND		6.8	1.2	ug/kg	1
cis-1,3-Dichloropropene	10061-01-5	8260B	ND		6.8	0.93	ug/kg	1
trans-1,3-Dichloropropene	10061-02-6	8260B	ND		6.8	1.1	ug/kg	1
Ethylbenzene	100-41-4	8260B	ND		6.8	2.3	ug/kg	1
2-Hexanone	591-78-6	8260B	ND		14	1.8	ug/kg	1
Isopropylbenzene	98-82-8	8260B	ND		6.8	1.1	ug/kg	1
Methyl acetate	79-20-9	8260B	ND		6.8	0.91	ug/kg	1
Methyl tertiary butyl ether (MTBE)	1634-04-4	8260B	ND		6.8	0.55	ug/kg	1
4-Methyl-2-pentanone	108-10-1	8260B	ND		14	2.0	ug/kg	1
Methylcyclohexane	108-87-2	8260B	ND		6.8	0.83	ug/kg	1
Methylene chloride	75-09-2	8260B	ND		6.8	3.5	ug/kg	1
Styrene	100-42-5	8260B	ND		6.8	1.5	ug/kg	1
1,1,2,2-Tetrachloroethane	79-34-5	8260B	ND		6.8	0.64	ug/kg	1
Tetrachloroethene	127-18-4	8260B	ND		6.8	0.68	ug/kg	1
Toluene	108-88-3	8260B	ND		6.8	2.3	ug/kg	1
1,1,2-Trichloro-1,2,2-Trifluoroethane	76-13-1	8260B	ND		6.8	2.9	ug/kg	1
1,2,4-Trichlorobenzene	120-82-1	8260B	ND		6.8	2.3	ug/kg	1
1,1,1-Trichloroethane	71-55-6	8260B	ND		6.8	1.2	ug/kg	1
1,1,2-Trichloroethane	79-00-5	8260B	ND		6.8	1.1	ug/kg	1

PQL = Practical quantitation limit
B = Detected in the method blank
E = Quantitation of compound exceeded the calibration range
ND = Not detected at or above the MDL
J = Estimated result < PQL and ≥ MDL
P = The RPD between two GC columns exceeds 40%
Where applicable, all soil sample analysis are reported on a dry weight basis unless flagged with a "W"
N = Recovery is out of criteria
H = Out of holding time

Volatile Organic Compounds by GC/MS

Client: ARCADIS U.S., Inc.	Laboratory ID: LI16010-004
Description: F39TWS13 (36-38)(091410)	Matrix: Solid
Date Sampled: 09/14/2010 1610	% Solids: 77.7 09/16/2010 1859
Date Received: 09/16/2010	

Run	Prep Method	Analytical Method	Dilution	Analysis Date	Analyst	Prep Date	Batch	Sample Wt.(g)
1	5035	8260B	1	09/16/2010 1536	AAE		42544	4.72

Parameter	CAS Number	Analytical Method	Result	Q	PQL	MDL	Units	Run
Trichloroethene	79-01-6	8260B	ND		6.8	2.6	ug/kg	1
Trichlorofluoromethane	75-69-4	8260B	ND		6.8	2.0	ug/kg	1
Vinyl chloride	75-01-4	8260B	ND		6.8	1.2	ug/kg	1
Xylenes (total)	1330-20-7	8260B	ND		6.8	4.0	ug/kg	1

Surrogate	Q	Run 1 % Recovery	Acceptance Limits
1,2-Dichloroethane-d4		84	53-142
Bromofluorobenzene		92	47-138
Toluene-d8		92	68-124

PQL = Practical quantitation limit
ND = Not detected at or above the MDL
Where applicable, all soil sample analysis are reported on a dry weight basis unless flagged with a "W"
B = Detected in the method blank
J = Estimated result < PQL and ≥ MDL
E = Quantitation of compound exceeded the calibration range
P = The RPD between two GC columns exceeds 40%
N = Recovery is out of criteria
H = Out of holding time

Volatile Organic Compounds by GC/MS

Client: ARCADIS U.S., Inc.
Laboratory ID: LI16010-005
Description: F39TWS13 (38-40)(091410)
Matrix: Solid
Date Sampled: 09/14/2010 1620
% Solids: 76.7 09/16/2010 1859
Date Received: 09/16/2010

Run	Prep Method	Analytical Method	Dilution	Analysis Date	Analyst	Prep Date	Batch	Sample Wt.(g)
1	5035	8260B	1	09/17/2010 1457	DLB		42596	5.79

Parameter	CAS Number	Analytical Method	Result	Q	PQL	MDL	Units	Run
Acetone	67-64-1	8260B	46		23	7.5	ug/kg	1
Benzene	71-43-2	8260B	ND		5.6	1.2	ug/kg	1
Bromodichloromethane	75-27-4	8260B	ND		5.6	1.9	ug/kg	1
Bromoform	75-25-2	8260B	ND		5.6	0.79	ug/kg	1
Bromomethane (Methyl bromide)	74-83-9	8260B	ND		5.6	2.0	ug/kg	1
2-Butanone (MEK)	78-93-3	8260B	ND		11	2.7	ug/kg	1
Carbon disulfide	75-15-0	8260B	ND		5.6	1.5	ug/kg	1
Carbon tetrachloride	56-23-5	8260B	ND		5.6	2.0	ug/kg	1
Chlorobenzene	108-90-7	8260B	ND		5.6	1.9	ug/kg	1
Chloroethane	75-00-3	8260B	ND		5.6	1.5	ug/kg	1
Chloroform	67-66-3	8260B	ND		5.6	0.93	ug/kg	1
Chloromethane (Methyl chloride)	74-87-3	8260B	ND		5.6	1.1	ug/kg	1
Cyclohexane	110-82-7	8260B	ND		5.6	0.76	ug/kg	1
1,2-Dibromo-3-chloropropane (DBCP)	96-12-8	8260B	ND		5.6	1.7	ug/kg	1
Dibromochloromethane	124-48-1	8260B	ND		5.6	1.9	ug/kg	1
1,2-Dibromoethane (EDB)	106-93-4	8260B	ND		5.6	0.96	ug/kg	1
1,2-Dichlorobenzene	95-50-1	8260B	ND		5.6	1.9	ug/kg	1
1,3-Dichlorobenzene	541-73-1	8260B	ND		5.6	1.9	ug/kg	1
1,4-Dichlorobenzene	106-46-7	8260B	ND		5.6	1.9	ug/kg	1
Dichlorodifluoromethane	75-71-8	8260B	ND		5.6	1.8	ug/kg	1
1,1-Dichloroethane	75-34-3	8260B	ND		5.6	0.82	ug/kg	1
1,2-Dichloroethane	107-06-2	8260B	ND		5.6	1.1	ug/kg	1
1,1-Dichloroethene	75-35-4	8260B	ND		5.6	1.9	ug/kg	1
cis-1,2-Dichloroethene	156-59-2	8260B	ND		5.6	0.86	ug/kg	1
trans-1,2-Dichloroethene	156-60-5	8260B	ND		5.6	1.7	ug/kg	1
1,2-Dichloropropane	78-87-5	8260B	ND		5.6	1.0	ug/kg	1
cis-1,3-Dichloropropene	10061-01-5	8260B	ND		5.6	0.77	ug/kg	1
trans-1,3-Dichloropropene	10061-02-6	8260B	ND		5.6	0.92	ug/kg	1
Ethylbenzene	100-41-4	8260B	ND		5.6	1.9	ug/kg	1
2-Hexanone	591-78-6	8260B	ND		11	1.5	ug/kg	1
Isopropylbenzene	98-82-8	8260B	ND		5.6	0.90	ug/kg	1
Methyl acetate	79-20-9	8260B	ND		5.6	0.75	ug/kg	1
Methyl tertiary butyl ether (MTBE)	1634-04-4	8260B	ND		5.6	0.45	ug/kg	1
4-Methyl-2-pentanone	108-10-1	8260B	ND		11	1.7	ug/kg	1
Methylcyclohexane	108-87-2	8260B	ND		5.6	0.69	ug/kg	1
Methylene chloride	75-09-2	8260B	ND		5.6	2.9	ug/kg	1
Styrene	100-42-5	8260B	ND		5.6	1.2	ug/kg	1
1,1,2,2-Tetrachloroethane	79-34-5	8260B	ND		5.6	0.53	ug/kg	1
Tetrachloroethene	127-18-4	8260B	2.3	J	5.6	0.56	ug/kg	1
Toluene	108-88-3	8260B	ND		5.6	1.9	ug/kg	1
1,1,2-Trichloro-1,2,2-Trifluoroethane	76-13-1	8260B	ND		5.6	2.4	ug/kg	1
1,2,4-Trichlorobenzene	120-82-1	8260B	ND		5.6	1.9	ug/kg	1
1,1,1-Trichloroethane	71-55-6	8260B	ND		5.6	0.96	ug/kg	1
1,1,2-Trichloroethane	79-00-5	8260B	ND		5.6	0.89	ug/kg	1

PQL = Practical quantitation limit
B = Detected in the method blank
E = Quantitation of compound exceeded the calibration range
ND = Not detected at or above the MDL
J = Estimated result < PQL and ≥ MDL
P = The RPD between two GC columns exceeds 40%
Where applicable, all soil sample analysis are reported on a dry weight basis unless flagged with a "W"
N = Recovery is out of criteria
H = Out of holding time

Volatile Organic Compounds by GC/MS

Client: ARCADIS U.S., Inc.	Laboratory ID: LI16010-005
Description: F39TWS13 (38-40)(091410)	Matrix: Solid
Date Sampled: 09/14/2010 1620	% Solids: 76.7 09/16/2010 1859
Date Received: 09/16/2010	

Run	Prep Method	Analytical Method	Dilution	Analysis Date	Analyst	Prep Date	Batch	Sample Wt.(g)
1	5035	8260B	1	09/17/2010 1457	DLB		42596	5.79

Parameter	CAS Number	Analytical Method	Result	Q	PQL	MDL	Units	Run
Trichloroethene	79-01-6	8260B	ND		5.6	2.1	ug/kg	1
Trichlorofluoromethane	75-69-4	8260B	ND		5.6	1.7	ug/kg	1
Vinyl chloride	75-01-4	8260B	ND		5.6	0.97	ug/kg	1
Xylenes (total)	1330-20-7	8260B	ND		5.6	3.3	ug/kg	1

Surrogate	Q	Run 1 % Recovery	Acceptance Limits
1,2-Dichloroethane-d4		92	53-142
Bromofluorobenzene		84	47-138
Toluene-d8		93	68-124

PQL = Practical quantitation limit
ND = Not detected at or above the MDL
Where applicable, all soil sample analysis are reported on a dry weight basis unless flagged with a "W"
B = Detected in the method blank
J = Estimated result < PQL and ≥ MDL
E = Quantitation of compound exceeded the calibration range
P = The RPD between two GC columns exceeds 40%
N = Recovery is out of criteria
H = Out of holding time

Volatile Organic Compounds by GC/MS

Client: ARCADIS U.S., Inc.
Laboratory ID: LI16010-006
Description: F39TWS13 (40-42)(091410)
Matrix: Solid
Date Sampled: 09/14/2010 1630
% Solids: 77.5 09/16/2010 1859
Date Received: 09/16/2010

Run	Prep Method	Analytical Method	Dilution	Analysis Date	Analyst	Prep Date	Batch	Sample Wt.(g)
1	5035	8260B	1	09/16/2010 1559	AAE		42544	5.80

Parameter	CAS Number	Analytical Method	Result	Q	PQL	MDL	Units	Run
Acetone	67-64-1	8260B	38		22	7.5	ug/kg	1
Benzene	71-43-2	8260B	ND		5.6	1.2	ug/kg	1
Bromodichloromethane	75-27-4	8260B	ND		5.6	1.9	ug/kg	1
Bromoform	75-25-2	8260B	ND		5.6	0.78	ug/kg	1
Bromomethane (Methyl bromide)	74-83-9	8260B	ND		5.6	2.0	ug/kg	1
2-Butanone (MEK)	78-93-3	8260B	ND		11	2.7	ug/kg	1
Carbon disulfide	75-15-0	8260B	ND		5.6	1.4	ug/kg	1
Carbon tetrachloride	56-23-5	8260B	ND		5.6	2.0	ug/kg	1
Chlorobenzene	108-90-7	8260B	ND		5.6	1.9	ug/kg	1
Chloroethane	75-00-3	8260B	ND		5.6	1.4	ug/kg	1
Chloroform	67-66-3	8260B	ND		5.6	0.92	ug/kg	1
Chloromethane (Methyl chloride)	74-87-3	8260B	ND		5.6	1.1	ug/kg	1
Cyclohexane	110-82-7	8260B	ND		5.6	0.75	ug/kg	1
1,2-Dibromo-3-chloropropane (DBCP)	96-12-8	8260B	ND		5.6	1.7	ug/kg	1
Dibromochloromethane	124-48-1	8260B	ND		5.6	1.9	ug/kg	1
1,2-Dibromoethane (EDB)	106-93-4	8260B	ND		5.6	0.95	ug/kg	1
1,2-Dichlorobenzene	95-50-1	8260B	ND		5.6	1.9	ug/kg	1
1,3-Dichlorobenzene	541-73-1	8260B	ND		5.6	1.9	ug/kg	1
1,4-Dichlorobenzene	106-46-7	8260B	ND		5.6	1.9	ug/kg	1
Dichlorodifluoromethane	75-71-8	8260B	ND		5.6	1.8	ug/kg	1
1,1-Dichloroethane	75-34-3	8260B	ND		5.6	0.81	ug/kg	1
1,2-Dichloroethane	107-06-2	8260B	ND		5.6	1.1	ug/kg	1
1,1-Dichloroethene	75-35-4	8260B	ND		5.6	1.9	ug/kg	1
cis-1,2-Dichloroethene	156-59-2	8260B	ND		5.6	0.85	ug/kg	1
trans-1,2-Dichloroethene	156-60-5	8260B	ND		5.6	1.7	ug/kg	1
1,2-Dichloropropane	78-87-5	8260B	ND		5.6	1.0	ug/kg	1
cis-1,3-Dichloropropene	10061-01-5	8260B	ND		5.6	0.76	ug/kg	1
trans-1,3-Dichloropropene	10061-02-6	8260B	ND		5.6	0.91	ug/kg	1
Ethylbenzene	100-41-4	8260B	ND		5.6	1.9	ug/kg	1
2-Hexanone	591-78-6	8260B	ND		11	1.4	ug/kg	1
Isopropylbenzene	98-82-8	8260B	ND		5.6	0.89	ug/kg	1
Methyl acetate	79-20-9	8260B	ND		5.6	0.75	ug/kg	1
Methyl tertiary butyl ether (MTBE)	1634-04-4	8260B	ND		5.6	0.45	ug/kg	1
4-Methyl-2-pentanone	108-10-1	8260B	ND		11	1.7	ug/kg	1
Methylcyclohexane	108-87-2	8260B	ND		5.6	0.68	ug/kg	1
Methylene chloride	75-09-2	8260B	ND		5.6	2.9	ug/kg	1
Styrene	100-42-5	8260B	ND		5.6	1.2	ug/kg	1
1,1,2,2-Tetrachloroethane	79-34-5	8260B	ND		5.6	0.52	ug/kg	1
Tetrachloroethene	127-18-4	8260B	ND		5.6	0.56	ug/kg	1
Toluene	108-88-3	8260B	ND		5.6	1.9	ug/kg	1
1,1,2-Trichloro-1,2,2-Trifluoroethane	76-13-1	8260B	ND		5.6	2.3	ug/kg	1
1,2,4-Trichlorobenzene	120-82-1	8260B	ND		5.6	1.9	ug/kg	1
1,1,1-Trichloroethane	71-55-6	8260B	ND		5.6	0.95	ug/kg	1
1,1,2-Trichloroethane	79-00-5	8260B	ND		5.6	0.88	ug/kg	1

PQL = Practical quantitation limit
B = Detected in the method blank
E = Quantitation of compound exceeded the calibration range
ND = Not detected at or above the MDL
J = Estimated result < PQL and ≥ MDL
P = The RPD between two GC columns exceeds 40%
Where applicable, all soil sample analysis are reported on a dry weight basis unless flagged with a "W"
N = Recovery is out of criteria
H = Out of holding time

Volatile Organic Compounds by GC/MS

Client: ARCADIS U.S., Inc.	Laboratory ID: LI16010-006
Description: F39TWS13 (40-42)(091410)	Matrix: Solid
Date Sampled: 09/14/2010 1630	% Solids: 77.5 09/16/2010 1859
Date Received: 09/16/2010	

Run	Prep Method	Analytical Method	Dilution	Analysis Date	Analyst	Prep Date	Batch	Sample Wt.(g)
1	5035	8260B	1	09/16/2010 1559	AAE		42544	5.80

Parameter	CAS Number	Analytical Method	Result	Q	PQL	MDL	Units	Run
Trichloroethene	79-01-6	8260B	ND		5.6	2.1	ug/kg	1
Trichlorofluoromethane	75-69-4	8260B	ND		5.6	1.7	ug/kg	1
Vinyl chloride	75-01-4	8260B	ND		5.6	0.96	ug/kg	1
Xylenes (total)	1330-20-7	8260B	ND		5.6	3.2	ug/kg	1

Surrogate	Q	Run 1 % Recovery	Acceptance Limits
1,2-Dichloroethane-d4		86	53-142
Bromofluorobenzene		97	47-138
Toluene-d8		100	68-124

PQL = Practical quantitation limit
ND = Not detected at or above the MDL
Where applicable, all soil sample analysis are reported on a dry weight basis unless flagged with a "W"
B = Detected in the method blank
J = Estimated result < PQL and ≥ MDL
E = Quantitation of compound exceeded the calibration range
P = The RPD between two GC columns exceeds 40%
N = Recovery is out of criteria
H = Out of holding time

Volatile Organic Compounds by GC/MS

Client: ARCADIS U.S., Inc.
Laboratory ID: LI16010-007
Description: F39TWS13 (42-44)(091410)
Matrix: Solid
Date Sampled: 09/14/2010 1640
% Solids: 82.0 09/16/2010 1859
Date Received: 09/16/2010

Run	Prep Method	Analytical Method	Dilution	Analysis Date	Analyst	Prep Date	Batch	Sample Wt.(g)
1	5035	8260B	1	09/17/2010 1521	DLB		42596	10.02

Parameter	CAS Number	Analytical Method	Result	Q	PQL	MDL	Units	Run
Acetone	67-64-1	8260B	33		12	4.1	ug/kg	1
Benzene	71-43-2	8260B	ND		3.0	0.67	ug/kg	1
Bromodichloromethane	75-27-4	8260B	ND		3.0	1.0	ug/kg	1
Bromoform	75-25-2	8260B	ND		3.0	0.43	ug/kg	1
Bromomethane (Methyl bromide)	74-83-9	8260B	ND		3.0	1.1	ug/kg	1
2-Butanone (MEK)	78-93-3	8260B	ND		6.1	1.5	ug/kg	1
Carbon disulfide	75-15-0	8260B	ND		3.0	0.79	ug/kg	1
Carbon tetrachloride	56-23-5	8260B	ND		3.0	1.1	ug/kg	1
Chlorobenzene	108-90-7	8260B	ND		3.0	1.0	ug/kg	1
Chloroethane	75-00-3	8260B	ND		3.0	0.79	ug/kg	1
Chloroform	67-66-3	8260B	ND		3.0	0.51	ug/kg	1
Chloromethane (Methyl chloride)	74-87-3	8260B	ND		3.0	0.61	ug/kg	1
Cyclohexane	110-82-7	8260B	ND		3.0	0.41	ug/kg	1
1,2-Dibromo-3-chloropropane (DBCP)	96-12-8	8260B	ND		3.0	0.91	ug/kg	1
Dibromochloromethane	124-48-1	8260B	ND		3.0	1.0	ug/kg	1
1,2-Dibromoethane (EDB)	106-93-4	8260B	ND		3.0	0.52	ug/kg	1
1,2-Dichlorobenzene	95-50-1	8260B	ND		3.0	1.0	ug/kg	1
1,3-Dichlorobenzene	541-73-1	8260B	ND		3.0	1.0	ug/kg	1
1,4-Dichlorobenzene	106-46-7	8260B	ND		3.0	1.0	ug/kg	1
Dichlorodifluoromethane	75-71-8	8260B	ND		3.0	0.97	ug/kg	1
1,1-Dichloroethane	75-34-3	8260B	ND		3.0	0.44	ug/kg	1
1,2-Dichloroethane	107-06-2	8260B	ND		3.0	0.61	ug/kg	1
1,1-Dichloroethene	75-35-4	8260B	ND		3.0	1.0	ug/kg	1
cis-1,2-Dichloroethene	156-59-2	8260B	ND		3.0	0.46	ug/kg	1
trans-1,2-Dichloroethene	156-60-5	8260B	ND		3.0	0.91	ug/kg	1
1,2-Dichloropropane	78-87-5	8260B	ND		3.0	0.55	ug/kg	1
cis-1,3-Dichloropropene	10061-01-5	8260B	ND		3.0	0.41	ug/kg	1
trans-1,3-Dichloropropene	10061-02-6	8260B	ND		3.0	0.50	ug/kg	1
Ethylbenzene	100-41-4	8260B	ND		3.0	1.0	ug/kg	1
2-Hexanone	591-78-6	8260B	ND		6.1	0.79	ug/kg	1
Isopropylbenzene	98-82-8	8260B	ND		3.0	0.49	ug/kg	1
Methyl acetate	79-20-9	8260B	ND		3.0	0.41	ug/kg	1
Methyl tertiary butyl ether (MTBE)	1634-04-4	8260B	ND		3.0	0.24	ug/kg	1
4-Methyl-2-pentanone	108-10-1	8260B	ND		6.1	0.91	ug/kg	1
Methylcyclohexane	108-87-2	8260B	ND		3.0	0.37	ug/kg	1
Methylene chloride	75-09-2	8260B	ND		3.0	1.6	ug/kg	1
Styrene	100-42-5	8260B	ND		3.0	0.67	ug/kg	1
1,1,2,2-Tetrachloroethane	79-34-5	8260B	ND		3.0	0.29	ug/kg	1
Tetrachloroethene	127-18-4	8260B	0.75	J	3.0	0.30	ug/kg	1
Toluene	108-88-3	8260B	ND		3.0	1.0	ug/kg	1
1,1,2-Trichloro-1,2,2-Trifluoroethane	76-13-1	8260B	ND		3.0	1.3	ug/kg	1
1,2,4-Trichlorobenzene	120-82-1	8260B	ND		3.0	1.0	ug/kg	1
1,1,1-Trichloroethane	71-55-6	8260B	ND		3.0	0.52	ug/kg	1
1,1,2-Trichloroethane	79-00-5	8260B	ND		3.0	0.48	ug/kg	1

PQL = Practical quantitation limit
B = Detected in the method blank
E = Quantitation of compound exceeded the calibration range
ND = Not detected at or above the MDL
J = Estimated result < PQL and ≥ MDL
P = The RPD between two GC columns exceeds 40%
Where applicable, all soil sample analysis are reported on a dry weight basis unless flagged with a "W"
N = Recovery is out of criteria
H = Out of holding time

Volatile Organic Compounds by GC/MS

Client: ARCADIS U.S., Inc.	Laboratory ID: LI16010-007
Description: F39TWS13 (42-44)(091410)	Matrix: Solid
Date Sampled: 09/14/2010 1640	% Solids: 82.0 09/16/2010 1859
Date Received: 09/16/2010	

Run	Prep Method	Analytical Method	Dilution	Analysis Date	Analyst	Prep Date	Batch	Sample Wt.(g)
1	5035	8260B	1	09/17/2010 1521	DLB		42596	10.02

Parameter	CAS Number	Analytical Method	Result	Q	PQL	MDL	Units	Run
Trichloroethene	79-01-6	8260B	ND		3.0	1.2	ug/kg	1
Trichlorofluoromethane	75-69-4	8260B	ND		3.0	0.91	ug/kg	1
Vinyl chloride	75-01-4	8260B	ND		3.0	0.52	ug/kg	1
Xylenes (total)	1330-20-7	8260B	ND		3.0	1.8	ug/kg	1

Surrogate	Q	Run 1 % Recovery	Acceptance Limits
1,2-Dichloroethane-d4		79	53-142
Bromofluorobenzene		80	47-138
Toluene-d8		93	68-124

PQL = Practical quantitation limit
ND = Not detected at or above the MDL
Where applicable, all soil sample analysis are reported on a dry weight basis unless flagged with a "W"
B = Detected in the method blank
J = Estimated result < PQL and ≥ MDL
E = Quantitation of compound exceeded the calibration range
P = The RPD between two GC columns exceeds 40%
N = Recovery is out of criteria
H = Out of holding time

Volatile Organic Compounds by GC/MS

Client: ARCADIS U.S., Inc.
Laboratory ID: LI16010-008
Description: F39TWS13 (44-46)(091410)
Matrix: Solid
Date Sampled: 09/14/2010 1645
% Solids: 79.3 09/16/2010 1859
Date Received: 09/16/2010

Run	Prep Method	Analytical Method	Dilution	Analysis Date	Analyst	Prep Date	Batch	Sample Wt.(g)
1	5035	8260B	1	09/17/2010 1237	DLB		42596	7.37

Parameter	CAS Number	Analytical Method	Result	Q	PQL	MDL	Units	Run
Acetone	67-64-1	8260B	41		17	5.7	ug/kg	1
Benzene	71-43-2	8260B	ND		4.3	0.94	ug/kg	1
Bromodichloromethane	75-27-4	8260B	ND		4.3	1.5	ug/kg	1
Bromoform	75-25-2	8260B	ND		4.3	0.60	ug/kg	1
Bromomethane (Methyl bromide)	74-83-9	8260B	ND		4.3	1.5	ug/kg	1
2-Butanone (MEK)	78-93-3	8260B	ND		8.6	2.1	ug/kg	1
Carbon disulfide	75-15-0	8260B	1.6	J	4.3	1.1	ug/kg	1
Carbon tetrachloride	56-23-5	8260B	ND		4.3	1.5	ug/kg	1
Chlorobenzene	108-90-7	8260B	ND		4.3	1.5	ug/kg	1
Chloroethane	75-00-3	8260B	ND		4.3	1.1	ug/kg	1
Chloroform	67-66-3	8260B	ND		4.3	0.71	ug/kg	1
Chloromethane (Methyl chloride)	74-87-3	8260B	ND		4.3	0.86	ug/kg	1
Cyclohexane	110-82-7	8260B	ND		4.3	0.58	ug/kg	1
1,2-Dibromo-3-chloropropane (DBCP)	96-12-8	8260B	ND		4.3	1.3	ug/kg	1
Dibromochloromethane	124-48-1	8260B	ND		4.3	1.5	ug/kg	1
1,2-Dibromoethane (EDB)	106-93-4	8260B	ND		4.3	0.73	ug/kg	1
1,2-Dichlorobenzene	95-50-1	8260B	ND		4.3	1.5	ug/kg	1
1,3-Dichlorobenzene	541-73-1	8260B	ND		4.3	1.5	ug/kg	1
1,4-Dichlorobenzene	106-46-7	8260B	ND		4.3	1.5	ug/kg	1
Dichlorodifluoromethane	75-71-8	8260B	ND		4.3	1.4	ug/kg	1
1,1-Dichloroethane	75-34-3	8260B	ND		4.3	0.62	ug/kg	1
1,2-Dichloroethane	107-06-2	8260B	ND		4.3	0.86	ug/kg	1
1,1-Dichloroethene	75-35-4	8260B	ND		4.3	1.5	ug/kg	1
cis-1,2-Dichloroethene	156-59-2	8260B	15		4.3	0.65	ug/kg	1
trans-1,2-Dichloroethene	156-60-5	8260B	ND		4.3	1.3	ug/kg	1
1,2-Dichloropropane	78-87-5	8260B	ND		4.3	0.78	ug/kg	1
cis-1,3-Dichloropropene	10061-01-5	8260B	ND		4.3	0.58	ug/kg	1
trans-1,3-Dichloropropene	10061-02-6	8260B	ND		4.3	0.70	ug/kg	1
Ethylbenzene	100-41-4	8260B	ND		4.3	1.5	ug/kg	1
2-Hexanone	591-78-6	8260B	ND		8.6	1.1	ug/kg	1
Isopropylbenzene	98-82-8	8260B	ND		4.3	0.68	ug/kg	1
Methyl acetate	79-20-9	8260B	ND		4.3	0.57	ug/kg	1
Methyl tertiary butyl ether (MTBE)	1634-04-4	8260B	ND		4.3	0.34	ug/kg	1
4-Methyl-2-pentanone	108-10-1	8260B	ND		8.6	1.3	ug/kg	1
Methylcyclohexane	108-87-2	8260B	ND		4.3	0.52	ug/kg	1
Methylene chloride	75-09-2	8260B	ND		4.3	2.2	ug/kg	1
Styrene	100-42-5	8260B	ND		4.3	0.94	ug/kg	1
1,1,2,2-Tetrachloroethane	79-34-5	8260B	ND		4.3	0.40	ug/kg	1
Tetrachloroethene	127-18-4	8260B	16		4.3	0.43	ug/kg	1
Toluene	108-88-3	8260B	ND		4.3	1.5	ug/kg	1
1,1,2-Trichloro-1,2,2-Trifluoroethane	76-13-1	8260B	ND		4.3	1.8	ug/kg	1
1,2,4-Trichlorobenzene	120-82-1	8260B	ND		4.3	1.5	ug/kg	1
1,1,1-Trichloroethane	71-55-6	8260B	ND		4.3	0.73	ug/kg	1
1,1,2-Trichloroethane	79-00-5	8260B	ND		4.3	0.68	ug/kg	1

PQL = Practical quantitation limit
B = Detected in the method blank
E = Quantitation of compound exceeded the calibration range
ND = Not detected at or above the MDL
J = Estimated result < PQL and ≥ MDL
P = The RPD between two GC columns exceeds 40%
Where applicable, all soil sample analysis are reported on a dry weight basis unless flagged with a "W"
N = Recovery is out of criteria
H = Out of holding time

Volatile Organic Compounds by GC/MS

Client: ARCADIS U.S., Inc.	Laboratory ID: LI16010-008
Description: F39TWS13 (44-46)(091410)	Matrix: Solid
Date Sampled: 09/14/2010 1645	% Solids: 79.3 09/16/2010 1859
Date Received: 09/16/2010	

Run	Prep Method	Analytical Method	Dilution	Analysis Date	Analyst	Prep Date	Batch	Sample Wt.(g)
1	5035	8260B	1	09/17/2010 1237	DLB		42596	7.37

Parameter	CAS Number	Analytical Method	Result	Q	PQL	MDL	Units	Run
Trichloroethene	79-01-6	8260B	90		4.3	1.6	ug/kg	1
Trichlorofluoromethane	75-69-4	8260B	ND		4.3	1.3	ug/kg	1
Vinyl chloride	75-01-4	8260B	ND		4.3	0.74	ug/kg	1
Xylenes (total)	1330-20-7	8260B	ND		4.3	2.5	ug/kg	1

Surrogate	Q	Run 1 % Recovery	Acceptance Limits
1,2-Dichloroethane-d4		83	53-142
Bromofluorobenzene		83	47-138
Toluene-d8		93	68-124

PQL = Practical quantitation limit
ND = Not detected at or above the MDL
Where applicable, all soil sample analysis are reported on a dry weight basis unless flagged with a "W"
B = Detected in the method blank
J = Estimated result < PQL and ≥ MDL
E = Quantitation of compound exceeded the calibration range
P = The RPD between two GC columns exceeds 40%
N = Recovery is out of criteria
H = Out of holding time

Volatile Organic Compounds by GC/MS

Client: ARCADIS U.S., Inc.
Laboratory ID: LI16010-009
Description: F39TWS13 (46-48)(091410)
Matrix: Solid
Date Sampled: 09/14/2010 1715
% Solids: 76.1 09/16/2010 1859
Date Received: 09/16/2010

Run	Prep Method	Analytical Method	Dilution	Analysis Date	Analyst	Prep Date	Batch	Sample Wt.(g)
1	5035	8260B	1	09/17/2010 1300	DLB		42596	6.25

Parameter	CAS Number	Analytical Method	Result	Q	PQL	MDL	Units	Run
Acetone	67-64-1	8260B	34		21	7.0	ug/kg	1
Benzene	71-43-2	8260B	ND		5.3	1.2	ug/kg	1
Bromodichloromethane	75-27-4	8260B	ND		5.3	1.8	ug/kg	1
Bromoform	75-25-2	8260B	ND		5.3	0.74	ug/kg	1
Bromomethane (Methyl bromide)	74-83-9	8260B	ND		5.3	1.9	ug/kg	1
2-Butanone (MEK)	78-93-3	8260B	ND		11	2.5	ug/kg	1
Carbon disulfide	75-15-0	8260B	ND		5.3	1.4	ug/kg	1
Carbon tetrachloride	56-23-5	8260B	ND		5.3	1.9	ug/kg	1
Chlorobenzene	108-90-7	8260B	ND		5.3	1.8	ug/kg	1
Chloroethane	75-00-3	8260B	ND		5.3	1.4	ug/kg	1
Chloroform	67-66-3	8260B	ND		5.3	0.87	ug/kg	1
Chloromethane (Methyl chloride)	74-87-3	8260B	ND		5.3	1.1	ug/kg	1
Cyclohexane	110-82-7	8260B	ND		5.3	0.71	ug/kg	1
1,2-Dibromo-3-chloropropane (DBCP)	96-12-8	8260B	ND		5.3	1.6	ug/kg	1
Dibromochloromethane	124-48-1	8260B	ND		5.3	1.8	ug/kg	1
1,2-Dibromoethane (EDB)	106-93-4	8260B	ND		5.3	0.89	ug/kg	1
1,2-Dichlorobenzene	95-50-1	8260B	ND		5.3	1.8	ug/kg	1
1,3-Dichlorobenzene	541-73-1	8260B	ND		5.3	1.8	ug/kg	1
1,4-Dichlorobenzene	106-46-7	8260B	ND		5.3	1.8	ug/kg	1
Dichlorodifluoromethane	75-71-8	8260B	ND		5.3	1.7	ug/kg	1
1,1-Dichloroethane	75-34-3	8260B	ND		5.3	0.77	ug/kg	1
1,2-Dichloroethane	107-06-2	8260B	ND		5.3	1.1	ug/kg	1
1,1-Dichloroethene	75-35-4	8260B	ND		5.3	1.8	ug/kg	1
cis-1,2-Dichloroethene	156-59-2	8260B	ND		5.3	0.80	ug/kg	1
trans-1,2-Dichloroethene	156-60-5	8260B	ND		5.3	1.6	ug/kg	1
1,2-Dichloropropane	78-87-5	8260B	ND		5.3	0.96	ug/kg	1
cis-1,3-Dichloropropene	10061-01-5	8260B	ND		5.3	0.72	ug/kg	1
trans-1,3-Dichloropropene	10061-02-6	8260B	ND		5.3	0.86	ug/kg	1
Ethylbenzene	100-41-4	8260B	ND		5.3	1.8	ug/kg	1
2-Hexanone	591-78-6	8260B	ND		11	1.4	ug/kg	1
Isopropylbenzene	98-82-8	8260B	ND		5.3	0.84	ug/kg	1
Methyl acetate	79-20-9	8260B	ND		5.3	0.70	ug/kg	1
Methyl tertiary butyl ether (MTBE)	1634-04-4	8260B	ND		5.3	0.42	ug/kg	1
4-Methyl-2-pentanone	108-10-1	8260B	ND		11	1.6	ug/kg	1
Methylcyclohexane	108-87-2	8260B	ND		5.3	0.64	ug/kg	1
Methylene chloride	75-09-2	8260B	ND		5.3	2.7	ug/kg	1
Styrene	100-42-5	8260B	ND		5.3	1.2	ug/kg	1
1,1,2,2-Tetrachloroethane	79-34-5	8260B	ND		5.3	0.49	ug/kg	1
Tetrachloroethene	127-18-4	8260B	ND		5.3	0.53	ug/kg	1
Toluene	108-88-3	8260B	ND		5.3	1.8	ug/kg	1
1,1,2-Trichloro-1,2,2-Trifluoroethane	76-13-1	8260B	ND		5.3	2.2	ug/kg	1
1,2,4-Trichlorobenzene	120-82-1	8260B	ND		5.3	1.8	ug/kg	1
1,1,1-Trichloroethane	71-55-6	8260B	ND		5.3	0.89	ug/kg	1
1,1,2-Trichloroethane	79-00-5	8260B	ND		5.3	0.83	ug/kg	1

PQL = Practical quantitation limit
B = Detected in the method blank
E = Quantitation of compound exceeded the calibration range
ND = Not detected at or above the MDL
J = Estimated result < PQL and ≥ MDL
P = The RPD between two GC columns exceeds 40%
Where applicable, all soil sample analysis are reported on a dry weight basis unless flagged with a "W"
N = Recovery is out of criteria
H = Out of holding time

Volatile Organic Compounds by GC/MS

Client: ARCADIS U.S., Inc.	Laboratory ID: LI16010-009
Description: F39TWS13 (46-48)(091410)	Matrix: Solid
Date Sampled: 09/14/2010 1715	% Solids: 76.1 09/16/2010 1859
Date Received: 09/16/2010	

Run	Prep Method	Analytical Method	Dilution	Analysis Date	Analyst	Prep Date	Batch	Sample Wt.(g)
1	5035	8260B	1	09/17/2010 1300	DLB		42596	6.25

Parameter	CAS Number	Analytical Method	Result	Q	PQL	MDL	Units	Run
Trichloroethene	79-01-6	8260B	ND		5.3	2.0	ug/kg	1
Trichlorofluoromethane	75-69-4	8260B	ND		5.3	1.6	ug/kg	1
Vinyl chloride	75-01-4	8260B	ND		5.3	0.90	ug/kg	1
Xylenes (total)	1330-20-7	8260B	ND		5.3	3.0	ug/kg	1

Surrogate	Q	Run 1 % Recovery	Acceptance Limits
1,2-Dichloroethane-d4		89	53-142
Bromofluorobenzene		92	47-138
Toluene-d8		99	68-124

PQL = Practical quantitation limit
ND = Not detected at or above the MDL
Where applicable, all soil sample analysis are reported on a dry weight basis unless flagged with a "W"
B = Detected in the method blank
J = Estimated result < PQL and ≥ MDL
E = Quantitation of compound exceeded the calibration range
P = The RPD between two GC columns exceeds 40%
N = Recovery is out of criteria
H = Out of holding time

Volatile Organic Compounds by GC/MS

Client: ARCADIS U.S., Inc.
Laboratory ID: LI16010-010
Description: F39TWS13 (48-50)(091410)
Matrix: Solid
Date Sampled: 09/14/2010 1720
% Solids: 77.2 09/16/2010 1859
Date Received: 09/16/2010

Run	Prep Method	Analytical Method	Dilution	Analysis Date	Analyst	Prep Date	Batch	Sample Wt.(g)
1	5035	8260B	1	09/16/2010 1709	AAE		42544	6.71

Parameter	CAS Number	Analytical Method	Result	Q	PQL	MDL	Units	Run
Acetone	67-64-1	8260B	47		19	6.5	ug/kg	1
Benzene	71-43-2	8260B	ND		4.8	1.1	ug/kg	1
Bromodichloromethane	75-27-4	8260B	ND		4.8	1.6	ug/kg	1
Bromoform	75-25-2	8260B	ND		4.8	0.68	ug/kg	1
Bromomethane (Methyl bromide)	74-83-9	8260B	ND		4.8	1.7	ug/kg	1
2-Butanone (MEK)	78-93-3	8260B	ND		9.7	2.3	ug/kg	1
Carbon disulfide	75-15-0	8260B	3.7	J	4.8	1.3	ug/kg	1
Carbon tetrachloride	56-23-5	8260B	ND		4.8	1.7	ug/kg	1
Chlorobenzene	108-90-7	8260B	ND		4.8	1.6	ug/kg	1
Chloroethane	75-00-3	8260B	ND		4.8	1.3	ug/kg	1
Chloroform	67-66-3	8260B	ND		4.8	0.80	ug/kg	1
Chloromethane (Methyl chloride)	74-87-3	8260B	ND		4.8	0.97	ug/kg	1
Cyclohexane	110-82-7	8260B	ND		4.8	0.65	ug/kg	1
1,2-Dibromo-3-chloropropane (DBCP)	96-12-8	8260B	ND		4.8	1.4	ug/kg	1
Dibromochloromethane	124-48-1	8260B	ND		4.8	1.6	ug/kg	1
1,2-Dibromoethane (EDB)	106-93-4	8260B	ND		4.8	0.82	ug/kg	1
1,2-Dichlorobenzene	95-50-1	8260B	ND		4.8	1.6	ug/kg	1
1,3-Dichlorobenzene	541-73-1	8260B	ND		4.8	1.6	ug/kg	1
1,4-Dichlorobenzene	106-46-7	8260B	ND		4.8	1.6	ug/kg	1
Dichlorodifluoromethane	75-71-8	8260B	ND		4.8	1.5	ug/kg	1
1,1-Dichloroethane	75-34-3	8260B	ND		4.8	0.71	ug/kg	1
1,2-Dichloroethane	107-06-2	8260B	ND		4.8	0.97	ug/kg	1
1,1-Dichloroethene	75-35-4	8260B	ND		4.8	1.6	ug/kg	1
cis-1,2-Dichloroethene	156-59-2	8260B	10		4.8	0.73	ug/kg	1
trans-1,2-Dichloroethene	156-60-5	8260B	2.5	J	4.8	1.4	ug/kg	1
1,2-Dichloropropane	78-87-5	8260B	ND		4.8	0.88	ug/kg	1
cis-1,3-Dichloropropene	10061-01-5	8260B	ND		4.8	0.66	ug/kg	1
trans-1,3-Dichloropropene	10061-02-6	8260B	ND		4.8	0.79	ug/kg	1
Ethylbenzene	100-41-4	8260B	ND		4.8	1.6	ug/kg	1
2-Hexanone	591-78-6	8260B	ND		9.7	1.3	ug/kg	1
Isopropylbenzene	98-82-8	8260B	ND		4.8	0.77	ug/kg	1
Methyl acetate	79-20-9	8260B	ND		4.8	0.65	ug/kg	1
Methyl tertiary butyl ether (MTBE)	1634-04-4	8260B	ND		4.8	0.39	ug/kg	1
4-Methyl-2-pentanone	108-10-1	8260B	ND		9.7	1.4	ug/kg	1
Methylcyclohexane	108-87-2	8260B	ND		4.8	0.59	ug/kg	1
Methylene chloride	75-09-2	8260B	ND		4.8	2.5	ug/kg	1
Styrene	100-42-5	8260B	ND		4.8	1.1	ug/kg	1
1,1,2,2-Tetrachloroethane	79-34-5	8260B	ND		4.8	0.45	ug/kg	1
Tetrachloroethene	127-18-4	8260B	14		4.8	0.48	ug/kg	1
Toluene	108-88-3	8260B	ND		4.8	1.6	ug/kg	1
1,1,2-Trichloro-1,2,2-Trifluoroethane	76-13-1	8260B	ND		4.8	2.0	ug/kg	1
1,2,4-Trichlorobenzene	120-82-1	8260B	ND		4.8	1.6	ug/kg	1
1,1,1-Trichloroethane	71-55-6	8260B	ND		4.8	0.82	ug/kg	1
1,1,2-Trichloroethane	79-00-5	8260B	ND		4.8	0.76	ug/kg	1

PQL = Practical quantitation limit
B = Detected in the method blank
E = Quantitation of compound exceeded the calibration range
ND = Not detected at or above the MDL
J = Estimated result < PQL and ≥ MDL
P = The RPD between two GC columns exceeds 40%
Where applicable, all soil sample analysis are reported on a dry weight basis unless flagged with a "W"
N = Recovery is out of criteria
H = Out of holding time

Volatile Organic Compounds by GC/MS

Client: ARCADIS U.S., Inc.	Laboratory ID: LI16010-010
Description: F39TWS13 (48-50)(091410)	Matrix: Solid
Date Sampled: 09/14/2010 1720	% Solids: 77.2 09/16/2010 1859
Date Received: 09/16/2010	

Run	Prep Method	Analytical Method	Dilution	Analysis Date	Analyst	Prep Date	Batch	Sample Wt.(g)
1	5035	8260B	1	09/16/2010 1709	AAE		42544	6.71

Parameter	CAS Number	Analytical Method	Result	Q	PQL	MDL	Units	Run
Trichloroethene	79-01-6	8260B	32		4.8	1.8	ug/kg	1
Trichlorofluoromethane	75-69-4	8260B	ND		4.8	1.4	ug/kg	1
Vinyl chloride	75-01-4	8260B	ND		4.8	0.83	ug/kg	1
Xylenes (total)	1330-20-7	8260B	ND		4.8	2.8	ug/kg	1

Surrogate	Q	Run 1 % Recovery	Acceptance Limits
1,2-Dichloroethane-d4		88	53-142
Bromofluorobenzene		94	47-138
Toluene-d8		98	68-124

PQL = Practical quantitation limit
ND = Not detected at or above the MDL
Where applicable, all soil sample analysis are reported on a dry weight basis unless flagged with a "W"
B = Detected in the method blank
J = Estimated result < PQL and ≥ MDL
E = Quantitation of compound exceeded the calibration range
P = The RPD between two GC columns exceeds 40%
N = Recovery is out of criteria
H = Out of holding time

Volatile Organic Compounds by GC/MS

Client: ARCADIS U.S., Inc.
Laboratory ID: LI16010-011
Description: F39TWS13 (50-52)(091410)
Matrix: Solid
Date Sampled: 09/14/2010 1755
% Solids: 84.7 09/16/2010 1859
Date Received: 09/16/2010

Run	Prep Method	Analytical Method	Dilution	Analysis Date	Analyst	Prep Date	Batch	Sample Wt.(g)
1	5035	8260B	1	09/16/2010 1756	AAE		42544	6.03

Parameter	CAS Number	Analytical Method	Result	Q	PQL	MDL	Units	Run
Acetone	67-64-1	8260B	33		20	6.6	ug/kg	1
Benzene	71-43-2	8260B	ND		4.9	1.1	ug/kg	1
Bromodichloromethane	75-27-4	8260B	ND		4.9	1.7	ug/kg	1
Bromoform	75-25-2	8260B	ND		4.9	0.69	ug/kg	1
Bromomethane (Methyl bromide)	74-83-9	8260B	ND		4.9	1.8	ug/kg	1
2-Butanone (MEK)	78-93-3	8260B	ND		9.8	2.3	ug/kg	1
Carbon disulfide	75-15-0	8260B	ND		4.9	1.3	ug/kg	1
Carbon tetrachloride	56-23-5	8260B	ND		4.9	1.8	ug/kg	1
Chlorobenzene	108-90-7	8260B	ND		4.9	1.7	ug/kg	1
Chloroethane	75-00-3	8260B	ND		4.9	1.3	ug/kg	1
Chloroform	67-66-3	8260B	ND		4.9	0.81	ug/kg	1
Chloromethane (Methyl chloride)	74-87-3	8260B	ND		4.9	0.98	ug/kg	1
Cyclohexane	110-82-7	8260B	ND		4.9	0.66	ug/kg	1
1,2-Dibromo-3-chloropropane (DBCP)	96-12-8	8260B	ND		4.9	1.5	ug/kg	1
Dibromochloromethane	124-48-1	8260B	ND		4.9	1.7	ug/kg	1
1,2-Dibromoethane (EDB)	106-93-4	8260B	ND		4.9	0.83	ug/kg	1
1,2-Dichlorobenzene	95-50-1	8260B	ND		4.9	1.7	ug/kg	1
1,3-Dichlorobenzene	541-73-1	8260B	ND		4.9	1.7	ug/kg	1
1,4-Dichlorobenzene	106-46-7	8260B	ND		4.9	1.7	ug/kg	1
Dichlorodifluoromethane	75-71-8	8260B	ND		4.9	1.6	ug/kg	1
1,1-Dichloroethane	75-34-3	8260B	ND		4.9	0.71	ug/kg	1
1,2-Dichloroethane	107-06-2	8260B	ND		4.9	0.98	ug/kg	1
1,1-Dichloroethene	75-35-4	8260B	ND		4.9	1.7	ug/kg	1
cis-1,2-Dichloroethene	156-59-2	8260B	ND		4.9	0.74	ug/kg	1
trans-1,2-Dichloroethene	156-60-5	8260B	ND		4.9	1.5	ug/kg	1
1,2-Dichloropropane	78-87-5	8260B	ND		4.9	0.89	ug/kg	1
cis-1,3-Dichloropropene	10061-01-5	8260B	ND		4.9	0.67	ug/kg	1
trans-1,3-Dichloropropene	10061-02-6	8260B	ND		4.9	0.80	ug/kg	1
Ethylbenzene	100-41-4	8260B	ND		4.9	1.7	ug/kg	1
2-Hexanone	591-78-6	8260B	ND		9.8	1.3	ug/kg	1
Isopropylbenzene	98-82-8	8260B	ND		4.9	0.78	ug/kg	1
Methyl acetate	79-20-9	8260B	ND		4.9	0.66	ug/kg	1
Methyl tertiary butyl ether (MTBE)	1634-04-4	8260B	ND		4.9	0.39	ug/kg	1
4-Methyl-2-pentanone	108-10-1	8260B	ND		9.8	1.5	ug/kg	1
Methylcyclohexane	108-87-2	8260B	ND		4.9	0.60	ug/kg	1
Methylene chloride	75-09-2	8260B	ND		4.9	2.5	ug/kg	1
Styrene	100-42-5	8260B	ND		4.9	1.1	ug/kg	1
1,1,2,2-Tetrachloroethane	79-34-5	8260B	ND		4.9	0.46	ug/kg	1
Tetrachloroethene	127-18-4	8260B	ND		4.9	0.49	ug/kg	1
Toluene	108-88-3	8260B	ND		4.9	1.7	ug/kg	1
1,1,2-Trichloro-1,2,2-Trifluoroethane	76-13-1	8260B	ND		4.9	2.1	ug/kg	1
1,2,4-Trichlorobenzene	120-82-1	8260B	ND		4.9	1.7	ug/kg	1
1,1,1-Trichloroethane	71-55-6	8260B	ND		4.9	0.83	ug/kg	1
1,1,2-Trichloroethane	79-00-5	8260B	ND		4.9	0.77	ug/kg	1

PQL = Practical quantitation limit
B = Detected in the method blank
E = Quantitation of compound exceeded the calibration range
ND = Not detected at or above the MDL
J = Estimated result < PQL and ≥ MDL
P = The RPD between two GC columns exceeds 40%
Where applicable, all soil sample analysis are reported on a dry weight basis unless flagged with a "W"
N = Recovery is out of criteria
H = Out of holding time

Volatile Organic Compounds by GC/MS

Client: ARCADIS U.S., Inc.	Laboratory ID: LI16010-011
Description: F39TWS13 (50-52)(091410)	Matrix: Solid
Date Sampled: 09/14/2010 1755	% Solids: 84.7 09/16/2010 1859
Date Received: 09/16/2010	

Run	Prep Method	Analytical Method	Dilution	Analysis Date	Analyst	Prep Date	Batch	Sample Wt.(g)
1	5035	8260B	1	09/16/2010 1756	AAE		42544	6.03

Parameter	CAS Number	Analytical Method	Result	Q	PQL	MDL	Units	Run
Trichloroethene	79-01-6	8260B	ND		4.9	1.9	ug/kg	1
Trichlorofluoromethane	75-69-4	8260B	ND		4.9	1.5	ug/kg	1
Vinyl chloride	75-01-4	8260B	ND		4.9	0.84	ug/kg	1
Xylenes (total)	1330-20-7	8260B	ND		4.9	2.8	ug/kg	1

Surrogate	Q	Run 1 % Recovery	Acceptance Limits
1,2-Dichloroethane-d4		88	53-142
Bromofluorobenzene		91	47-138
Toluene-d8		96	68-124

PQL = Practical quantitation limit
ND = Not detected at or above the MDL
Where applicable, all soil sample analysis are reported on a dry weight basis unless flagged with a "W"
B = Detected in the method blank
J = Estimated result < PQL and ≥ MDL
E = Quantitation of compound exceeded the calibration range
P = The RPD between two GC columns exceeds 40%
N = Recovery is out of criteria
H = Out of holding time

Volatile Organic Compounds by GC/MS

Client: ARCADIS U.S., Inc.
Laboratory ID: LI16010-012
Description: F39TWS13 (52-54)(091410)
Matrix: Solid
Date Sampled: 09/14/2010 1805
% Solids: 78.4 09/16/2010 1859
Date Received: 09/16/2010

Run	Prep Method	Analytical Method	Dilution	Analysis Date	Analyst	Prep Date	Batch	Sample Wt.(g)
1	5035	8260B	1	09/17/2010 1544	DLB		42596	7.40

Parameter	CAS Number	Analytical Method	Result	Q	PQL	MDL	Units	Run
Acetone	67-64-1	8260B	46		17	5.8	ug/kg	1
Benzene	71-43-2	8260B	ND		4.3	0.95	ug/kg	1
Bromodichloromethane	75-27-4	8260B	ND		4.3	1.5	ug/kg	1
Bromoform	75-25-2	8260B	ND		4.3	0.60	ug/kg	1
Bromomethane (Methyl bromide)	74-83-9	8260B	ND		4.3	1.6	ug/kg	1
2-Butanone (MEK)	78-93-3	8260B	ND		8.6	2.1	ug/kg	1
Carbon disulfide	75-15-0	8260B	ND		4.3	1.1	ug/kg	1
Carbon tetrachloride	56-23-5	8260B	ND		4.3	1.6	ug/kg	1
Chlorobenzene	108-90-7	8260B	ND		4.3	1.5	ug/kg	1
Chloroethane	75-00-3	8260B	ND		4.3	1.1	ug/kg	1
Chloroform	67-66-3	8260B	ND		4.3	0.71	ug/kg	1
Chloromethane (Methyl chloride)	74-87-3	8260B	ND		4.3	0.86	ug/kg	1
Cyclohexane	110-82-7	8260B	ND		4.3	0.58	ug/kg	1
1,2-Dibromo-3-chloropropane (DBCP)	96-12-8	8260B	ND		4.3	1.3	ug/kg	1
Dibromochloromethane	124-48-1	8260B	ND		4.3	1.5	ug/kg	1
1,2-Dibromoethane (EDB)	106-93-4	8260B	ND		4.3	0.73	ug/kg	1
1,2-Dichlorobenzene	95-50-1	8260B	ND		4.3	1.5	ug/kg	1
1,3-Dichlorobenzene	541-73-1	8260B	ND		4.3	1.5	ug/kg	1
1,4-Dichlorobenzene	106-46-7	8260B	ND		4.3	1.5	ug/kg	1
Dichlorodifluoromethane	75-71-8	8260B	ND		4.3	1.4	ug/kg	1
1,1-Dichloroethane	75-34-3	8260B	ND		4.3	0.63	ug/kg	1
1,2-Dichloroethane	107-06-2	8260B	ND		4.3	0.86	ug/kg	1
1,1-Dichloroethene	75-35-4	8260B	ND		4.3	1.5	ug/kg	1
cis-1,2-Dichloroethene	156-59-2	8260B	ND		4.3	0.65	ug/kg	1
trans-1,2-Dichloroethene	156-60-5	8260B	ND		4.3	1.3	ug/kg	1
1,2-Dichloropropane	78-87-5	8260B	ND		4.3	0.78	ug/kg	1
cis-1,3-Dichloropropene	10061-01-5	8260B	ND		4.3	0.59	ug/kg	1
trans-1,3-Dichloropropene	10061-02-6	8260B	ND		4.3	0.71	ug/kg	1
Ethylbenzene	100-41-4	8260B	ND		4.3	1.5	ug/kg	1
2-Hexanone	591-78-6	8260B	ND		8.6	1.1	ug/kg	1
Isopropylbenzene	98-82-8	8260B	ND		4.3	0.69	ug/kg	1
Methyl acetate	79-20-9	8260B	ND		4.3	0.58	ug/kg	1
Methyl tertiary butyl ether (MTBE)	1634-04-4	8260B	ND		4.3	0.34	ug/kg	1
4-Methyl-2-pentanone	108-10-1	8260B	ND		8.6	1.3	ug/kg	1
Methylcyclohexane	108-87-2	8260B	ND		4.3	0.53	ug/kg	1
Methylene chloride	75-09-2	8260B	ND		4.3	2.2	ug/kg	1
Styrene	100-42-5	8260B	ND		4.3	0.95	ug/kg	1
1,1,2,2-Tetrachloroethane	79-34-5	8260B	ND		4.3	0.40	ug/kg	1
Tetrachloroethene	127-18-4	8260B	1.4	J	4.3	0.43	ug/kg	1
Toluene	108-88-3	8260B	ND		4.3	1.5	ug/kg	1
1,1,2-Trichloro-1,2,2-Trifluoroethane	76-13-1	8260B	ND		4.3	1.8	ug/kg	1
1,2,4-Trichlorobenzene	120-82-1	8260B	ND		4.3	1.5	ug/kg	1
1,1,1-Trichloroethane	71-55-6	8260B	ND		4.3	0.73	ug/kg	1
1,1,2-Trichloroethane	79-00-5	8260B	ND		4.3	0.68	ug/kg	1

PQL = Practical quantitation limit
B = Detected in the method blank
E = Quantitation of compound exceeded the calibration range
ND = Not detected at or above the MDL
J = Estimated result < PQL and ≥ MDL
P = The RPD between two GC columns exceeds 40%
Where applicable, all soil sample analysis are reported on a dry weight basis unless flagged with a "W"
N = Recovery is out of criteria
H = Out of holding time

Volatile Organic Compounds by GC/MS

Client: ARCADIS U.S., Inc.	Laboratory ID: LI16010-012
Description: F39TWS13 (52-54)(091410)	Matrix: Solid
Date Sampled: 09/14/2010 1805	% Solids: 78.4 09/16/2010 1859
Date Received: 09/16/2010	

Run	Prep Method	Analytical Method	Dilution	Analysis Date	Analyst	Prep Date	Batch	Sample Wt.(g)
1	5035	8260B	1	09/17/2010 1544	DLB		42596	7.40

Parameter	CAS Number	Analytical Method	Result	Q	PQL	MDL	Units	Run
Trichloroethene	79-01-6	8260B	1.9	J	4.3	1.6	ug/kg	1
Trichlorofluoromethane	75-69-4	8260B	ND		4.3	1.3	ug/kg	1
Vinyl chloride	75-01-4	8260B	ND		4.3	0.74	ug/kg	1
Xylenes (total)	1330-20-7	8260B	ND		4.3	2.5	ug/kg	1

Surrogate	Q	Run 1 % Recovery	Acceptance Limits
1,2-Dichloroethane-d4		93	53-142
Bromofluorobenzene		85	47-138
Toluene-d8		95	68-124

PQL = Practical quantitation limit
ND = Not detected at or above the MDL
Where applicable, all soil sample analysis are reported on a dry weight basis unless flagged with a "W"
B = Detected in the method blank
J = Estimated result < PQL and ≥ MDL
E = Quantitation of compound exceeded the calibration range
P = The RPD between two GC columns exceeds 40%
N = Recovery is out of criteria
H = Out of holding time

Volatile Organic Compounds by GC/MS

Client: ARCADIS U.S., Inc.
Laboratory ID: LI16010-013
Description: F39TWS13 (54-56)(091410)
Matrix: Solid
Date Sampled: 09/14/2010 1825
% Solids: 79.4 09/16/2010 1859
Date Received: 09/16/2010

Run	Prep Method	Analytical Method	Dilution	Analysis Date	Analyst	Prep Date	Batch	Sample Wt.(g)
1	5035	8260B	50	09/20/2010 1416	DLB		42683	6.17
2	5035	8260B	1	09/16/2010 1820	DLB		42758	6.99

Parameter	CAS Number	Analytical Method	Result	Q	PQL	MDL	Units	Run
Acetone	67-64-1	8260B	70		18	6.0	ug/kg	2
Benzene	71-43-2	8260B	ND		4.5	0.99	ug/kg	2
Bromodichloromethane	75-27-4	8260B	ND		4.5	1.5	ug/kg	2
Bromoform	75-25-2	8260B	ND		4.5	0.63	ug/kg	2
Bromomethane (Methyl bromide)	74-83-9	8260B	ND		4.5	1.6	ug/kg	2
2-Butanone (MEK)	78-93-3	8260B	ND		9.0	2.2	ug/kg	2
Carbon disulfide	75-15-0	8260B	6.4		4.5	1.2	ug/kg	2
Carbon tetrachloride	56-23-5	8260B	ND		4.5	1.6	ug/kg	2
Chlorobenzene	108-90-7	8260B	ND		4.5	1.5	ug/kg	2
Chloroethane	75-00-3	8260B	ND		4.5	1.2	ug/kg	2
Chloroform	67-66-3	8260B	ND		4.5	0.75	ug/kg	2
Chloromethane (Methyl chloride)	74-87-3	8260B	ND		4.5	0.90	ug/kg	2
Cyclohexane	110-82-7	8260B	ND		4.5	0.61	ug/kg	2
1,2-Dibromo-3-chloropropane (DBCP)	96-12-8	8260B	ND		4.5	1.4	ug/kg	2
Dibromochloromethane	124-48-1	8260B	ND		4.5	1.5	ug/kg	2
1,2-Dibromoethane (EDB)	106-93-4	8260B	ND		4.5	0.77	ug/kg	2
1,2-Dichlorobenzene	95-50-1	8260B	ND		4.5	1.5	ug/kg	2
1,3-Dichlorobenzene	541-73-1	8260B	ND		4.5	1.5	ug/kg	2
1,4-Dichlorobenzene	106-46-7	8260B	ND		4.5	1.5	ug/kg	2
Dichlorodifluoromethane	75-71-8	8260B	ND		4.5	1.4	ug/kg	2
1,1-Dichloroethane	75-34-3	8260B	ND		4.5	0.66	ug/kg	2
1,2-Dichloroethane	107-06-2	8260B	ND		4.5	0.90	ug/kg	2
1,1-Dichloroethene	75-35-4	8260B	ND		4.5	1.5	ug/kg	2
cis-1,2-Dichloroethene	156-59-2	8260B	65		4.5	0.68	ug/kg	2
trans-1,2-Dichloroethene	156-60-5	8260B	ND		4.5	1.4	ug/kg	2
1,2-Dichloropropane	78-87-5	8260B	ND		4.5	0.82	ug/kg	2
cis-1,3-Dichloropropene	10061-01-5	8260B	ND		4.5	0.61	ug/kg	2
trans-1,3-Dichloropropene	10061-02-6	8260B	ND		4.5	0.74	ug/kg	2
Ethylbenzene	100-41-4	8260B	ND		4.5	1.5	ug/kg	2
2-Hexanone	591-78-6	8260B	ND		9.0	1.2	ug/kg	2
Isopropylbenzene	98-82-8	8260B	ND		4.5	0.72	ug/kg	2
Methyl acetate	79-20-9	8260B	ND		4.5	0.60	ug/kg	2
Methyl tertiary butyl ether (MTBE)	1634-04-4	8260B	ND		4.5	0.36	ug/kg	2
4-Methyl-2-pentanone	108-10-1	8260B	ND		9.0	1.4	ug/kg	2
Methylcyclohexane	108-87-2	8260B	ND		4.5	0.55	ug/kg	2
Methylene chloride	75-09-2	8260B	ND		4.5	2.3	ug/kg	2
Styrene	100-42-5	8260B	ND		4.5	0.99	ug/kg	2
1,1,2,2-Tetrachloroethane	79-34-5	8260B	ND		4.5	0.42	ug/kg	2
Tetrachloroethene	127-18-4	8260B	170	J	260	26	ug/kg	1
Toluene	108-88-3	8260B	ND		4.5	1.5	ug/kg	2
1,1,2-Trichloro-1,2,2-Trifluoroethane	76-13-1	8260B	ND		4.5	1.9	ug/kg	2
1,2,4-Trichlorobenzene	120-82-1	8260B	ND		4.5	1.5	ug/kg	2
1,1,1-Trichloroethane	71-55-6	8260B	ND		4.5	0.77	ug/kg	2

PQL = Practical quantitation limit
B = Detected in the method blank
E = Quantitation of compound exceeded the calibration range
ND = Not detected at or above the MDL
J = Estimated result < PQL and ≥ MDL
P = The RPD between two GC columns exceeds 40%
Where applicable, all soil sample analysis are reported on a dry weight basis unless flagged with a "W"
N = Recovery is out of criteria
H = Out of holding time

Volatile Organic Compounds by GC/MS

Client: ARCADIS U.S., Inc.	Laboratory ID: LI16010-013
Description: F39TWS13 (54-56)(091410)	Matrix: Solid
Date Sampled: 09/14/2010 1825	% Solids: 79.4 09/16/2010 1859
Date Received: 09/16/2010	

Run	Prep Method	Analytical Method	Dilution	Analysis Date	Analyst	Prep Date	Batch	Sample Wt.(g)
1	5035	8260B	50	09/20/2010 1416	DLB		42683	6.17
2	5035	8260B	1	09/16/2010 1820	DLB		42758	6.99

Parameter	CAS Number	Analytical Method	Result	Q	PQL	MDL	Units	Run
1,1,2-Trichloroethane	79-00-5	8260B	ND		4.5	0.71	ug/kg	2
Trichloroethene	79-01-6	8260B	630		4.5	1.7	ug/kg	2
Trichlorofluoromethane	75-69-4	8260B	ND		4.5	1.4	ug/kg	2
Vinyl chloride	75-01-4	8260B	ND		4.5	0.77	ug/kg	2
Xylenes (total)	1330-20-7	8260B	ND		4.5	2.6	ug/kg	2

Surrogate	Q	Run 1 % Recovery	Acceptance Limits	Q	Run 2 % Recovery	Acceptance Limits
1,2-Dichloroethane-d4		88	53-142		88	53-142
Bromofluorobenzene		90	47-138		87	47-138
Toluene-d8		92	68-124		98	68-124

PQL = Practical quantitation limit
ND = Not detected at or above the MDL
Where applicable, all soil sample analysis are reported on a dry weight basis unless flagged with a "W"
B = Detected in the method blank
J = Estimated result < PQL and ≥ MDL
E = Quantitation of compound exceeded the calibration range
P = The RPD between two GC columns exceeds 40%
N = Recovery is out of criteria
H = Out of holding time

Volatile Organic Compounds by GC/MS

Client: ARCADIS U.S., Inc.
Laboratory ID: LI16010-014
Description: F39TWS13 (56-58)(091410)
Matrix: Solid
Date Sampled: 09/14/2010 1830
% Solids: 74.8 09/16/2010 1859
Date Received: 09/16/2010

Run	Prep Method	Analytical Method	Dilution	Analysis Date	Analyst	Prep Date	Batch	Sample Wt.(g)
1	5035	8260B	1	09/17/2010 1324	DLB		42596	6.46
2	5035	8260B	50	09/20/2010 1439	DLB		42683	6.59

Parameter	CAS Number	Analytical Method	Result	Q	PQL	MDL	Units	Run
Acetone	67-64-1	8260B	46		21	6.9	ug/kg	1
Benzene	71-43-2	8260B	ND		5.2	1.1	ug/kg	1
Bromodichloromethane	75-27-4	8260B	ND		5.2	1.8	ug/kg	1
Bromoform	75-25-2	8260B	ND		5.2	0.72	ug/kg	1
Bromomethane (Methyl bromide)	74-83-9	8260B	ND		5.2	1.9	ug/kg	1
2-Butanone (MEK)	78-93-3	8260B	ND		10	2.5	ug/kg	1
Carbon disulfide	75-15-0	8260B	1.6	J	5.2	1.3	ug/kg	1
Carbon tetrachloride	56-23-5	8260B	ND		5.2	1.9	ug/kg	1
Chlorobenzene	108-90-7	8260B	ND		5.2	1.8	ug/kg	1
Chloroethane	75-00-3	8260B	ND		5.2	1.3	ug/kg	1
Chloroform	67-66-3	8260B	ND		5.2	0.86	ug/kg	1
Chloromethane (Methyl chloride)	74-87-3	8260B	ND		5.2	1.0	ug/kg	1
Cyclohexane	110-82-7	8260B	ND		5.2	0.70	ug/kg	1
1,2-Dibromo-3-chloropropane (DBCP)	96-12-8	8260B	ND		5.2	1.6	ug/kg	1
Dibromochloromethane	124-48-1	8260B	ND		5.2	1.8	ug/kg	1
1,2-Dibromoethane (EDB)	106-93-4	8260B	ND		5.2	0.88	ug/kg	1
1,2-Dichlorobenzene	95-50-1	8260B	ND		5.2	1.8	ug/kg	1
1,3-Dichlorobenzene	541-73-1	8260B	ND		5.2	1.8	ug/kg	1
1,4-Dichlorobenzene	106-46-7	8260B	ND		5.2	1.8	ug/kg	1
Dichlorodifluoromethane	75-71-8	8260B	ND		5.2	1.7	ug/kg	1
1,1-Dichloroethane	75-34-3	8260B	ND		5.2	0.76	ug/kg	1
1,2-Dichloroethane	107-06-2	8260B	ND		5.2	1.0	ug/kg	1
1,1-Dichloroethene	75-35-4	8260B	ND		5.2	1.8	ug/kg	1
cis-1,2-Dichloroethene	156-59-2	8260B	99		5.2	0.79	ug/kg	1
trans-1,2-Dichloroethene	156-60-5	8260B	ND		5.2	1.6	ug/kg	1
1,2-Dichloropropane	78-87-5	8260B	ND		5.2	0.94	ug/kg	1
cis-1,3-Dichloropropene	10061-01-5	8260B	ND		5.2	0.70	ug/kg	1
trans-1,3-Dichloropropene	10061-02-6	8260B	ND		5.2	0.85	ug/kg	1
Ethylbenzene	100-41-4	8260B	ND		5.2	1.8	ug/kg	1
2-Hexanone	591-78-6	8260B	ND		10	1.3	ug/kg	1
Isopropylbenzene	98-82-8	8260B	ND		5.2	0.83	ug/kg	1
Methyl acetate	79-20-9	8260B	ND		5.2	0.69	ug/kg	1
Methyl tertiary butyl ether (MTBE)	1634-04-4	8260B	ND		5.2	0.41	ug/kg	1
4-Methyl-2-pentanone	108-10-1	8260B	ND		10	1.6	ug/kg	1
Methylcyclohexane	108-87-2	8260B	ND		5.2	0.63	ug/kg	1
Methylene chloride	75-09-2	8260B	ND		5.2	2.7	ug/kg	1
Styrene	100-42-5	8260B	ND		5.2	1.1	ug/kg	1
1,1,2,2-Tetrachloroethane	79-34-5	8260B	ND		5.2	0.49	ug/kg	1
Tetrachloroethene	127-18-4	8260B	180		5.2	0.52	ug/kg	1
Toluene	108-88-3	8260B	ND		5.2	1.8	ug/kg	1
1,1,2-Trichloro-1,2,2-Trifluoroethane	76-13-1	8260B	ND		5.2	2.2	ug/kg	1
1,2,4-Trichlorobenzene	120-82-1	8260B	ND		5.2	1.8	ug/kg	1
1,1,1-Trichloroethane	71-55-6	8260B	ND		5.2	0.88	ug/kg	1

PQL = Practical quantitation limit
B = Detected in the method blank
E = Quantitation of compound exceeded the calibration range
ND = Not detected at or above the MDL
J = Estimated result < PQL and ≥ MDL
P = The RPD between two GC columns exceeds 40%
Where applicable, all soil sample analysis are reported on a dry weight basis unless flagged with a "W"
N = Recovery is out of criteria
H = Out of holding time

Volatile Organic Compounds by GC/MS

Client: ARCADIS U.S., Inc.
Laboratory ID: LI16010-014
Description: F39TWS13 (56-58)(091410)
Matrix: Solid
Date Sampled: 09/14/2010 1830
% Solids: 74.8 09/16/2010 1859
Date Received: 09/16/2010

Run	Prep Method	Analytical Method	Dilution	Analysis Date	Analyst	Prep Date	Batch	Sample Wt.(g)
1	5035	8260B	1	09/17/2010 1324	DLB		42596	6.46
2	5035	8260B	50	09/20/2010 1439	DLB		42683	6.59

Parameter	CAS Number	Analytical Method	Result	Q	PQL	MDL	Units	Run
1,1,2-Trichloroethane	79-00-5	8260B	ND		5.2	0.82	ug/kg	1
Trichloroethene	79-01-6	8260B	240	J	250	96	ug/kg	2
Trichlorofluoromethane	75-69-4	8260B	ND		5.2	1.6	ug/kg	1
Vinyl chloride	75-01-4	8260B	ND		5.2	0.89	ug/kg	1
Xylenes (total)	1330-20-7	8260B	ND		5.2	3.0	ug/kg	1

Surrogate	Q	Run 1 % Recovery	Acceptance Limits	Q	Run 2 % Recovery	Acceptance Limits
1,2-Dichloroethane-d4		86	53-142		89	53-142
Bromofluorobenzene		82	47-138		88	47-138
Toluene-d8		95	68-124		93	68-124

PQL = Practical quantitation limit
B = Detected in the method blank
E = Quantitation of compound exceeded the calibration range
ND = Not detected at or above the MDL
J = Estimated result < PQL and ≥ MDL
P = The RPD between two GC columns exceeds 40%
Where applicable, all soil sample analysis are reported on a dry weight basis unless flagged with a "W"
N = Recovery is out of criteria
H = Out of holding time

Volatile Organic Compounds by GC/MS

Client: ARCADIS U.S., Inc.
Laboratory ID: LI16010-015
Description: F39TWS13 (58-60)(091410)
Matrix: Solid
Date Sampled: 09/14/2010 1855
% Solids: 83.4 09/16/2010 1859
Date Received: 09/16/2010

Run	Prep Method	Analytical Method	Dilution	Analysis Date	Analyst	Prep Date	Batch	Sample Wt.(g)
1	5035	8260B	1	09/17/2010 1347	DLB		42596	7.08
2	5035	8260B	1	09/17/2010 1903	DLB		42596	4.61

Parameter	CAS Number	Analytical Method	Result	Q	PQL	MDL	Units	Run
Acetone	67-64-1	8260B	65		17	5.7	ug/kg	1
Benzene	71-43-2	8260B	ND		4.2	0.93	ug/kg	1
Bromodichloromethane	75-27-4	8260B	ND		4.2	1.4	ug/kg	1
Bromoform	75-25-2	8260B	ND		4.2	0.59	ug/kg	1
Bromomethane (Methyl bromide)	74-83-9	8260B	ND		4.2	1.5	ug/kg	1
2-Butanone (MEK)	78-93-3	8260B	ND		8.5	2.0	ug/kg	1
Carbon disulfide	75-15-0	8260B	11		4.2	1.1	ug/kg	1
Carbon tetrachloride	56-23-5	8260B	ND		4.2	1.5	ug/kg	1
Chlorobenzene	108-90-7	8260B	ND		4.2	1.4	ug/kg	1
Chloroethane	75-00-3	8260B	ND		4.2	1.1	ug/kg	1
Chloroform	67-66-3	8260B	ND		4.2	0.70	ug/kg	1
Chloromethane (Methyl chloride)	74-87-3	8260B	ND		4.2	0.85	ug/kg	1
Cyclohexane	110-82-7	8260B	ND		4.2	0.57	ug/kg	1
1,2-Dibromo-3-chloropropane (DBCP)	96-12-8	8260B	ND		4.2	1.3	ug/kg	1
Dibromochloromethane	124-48-1	8260B	ND		4.2	1.4	ug/kg	1
1,2-Dibromoethane (EDB)	106-93-4	8260B	ND		4.2	0.72	ug/kg	1
1,2-Dichlorobenzene	95-50-1	8260B	ND		4.2	1.4	ug/kg	1
1,3-Dichlorobenzene	541-73-1	8260B	ND		4.2	1.4	ug/kg	1
1,4-Dichlorobenzene	106-46-7	8260B	ND		4.2	1.4	ug/kg	1
Dichlorodifluoromethane	75-71-8	8260B	ND		4.2	1.4	ug/kg	1
1,1-Dichloroethane	75-34-3	8260B	ND		4.2	0.62	ug/kg	1
1,2-Dichloroethane	107-06-2	8260B	ND		4.2	0.85	ug/kg	1
1,1-Dichloroethene	75-35-4	8260B	ND		4.2	1.4	ug/kg	1
cis-1,2-Dichloroethene	156-59-2	8260B	5.4		4.2	0.64	ug/kg	1
trans-1,2-Dichloroethene	156-60-5	8260B	ND		4.2	1.3	ug/kg	1
1,2-Dichloropropane	78-87-5	8260B	ND		4.2	0.77	ug/kg	1
cis-1,3-Dichloropropene	10061-01-5	8260B	ND		4.2	0.58	ug/kg	1
trans-1,3-Dichloropropene	10061-02-6	8260B	ND		4.2	0.69	ug/kg	1
Ethylbenzene	100-41-4	8260B	ND		4.2	1.4	ug/kg	1
2-Hexanone	591-78-6	8260B	ND		8.5	1.1	ug/kg	1
Isopropylbenzene	98-82-8	8260B	ND		4.2	0.68	ug/kg	1
Methyl acetate	79-20-9	8260B	ND		4.2	0.57	ug/kg	1
Methyl tertiary butyl ether (MTBE)	1634-04-4	8260B	ND		4.2	0.34	ug/kg	1
4-Methyl-2-pentanone	108-10-1	8260B	ND		8.5	1.3	ug/kg	1
Methylcyclohexane	108-87-2	8260B	ND		4.2	0.52	ug/kg	1
Methylene chloride	75-09-2	8260B	ND		4.2	2.2	ug/kg	1
Styrene	100-42-5	8260B	ND		4.2	0.93	ug/kg	1
1,1,2,2-Tetrachloroethane	79-34-5	8260B	ND		4.2	0.40	ug/kg	1
Tetrachloroethene	127-18-4	8260B	2.3	J	4.2	0.42	ug/kg	1
Toluene	108-88-3	8260B	ND		4.2	1.4	ug/kg	1
1,1,2-Trichloro-1,2,2-Trifluoroethane	76-13-1	8260B	ND		4.2	1.8	ug/kg	1
1,2,4-Trichlorobenzene	120-82-1	8260B	ND		4.2	1.4	ug/kg	1
1,1,1-Trichloroethane	71-55-6	8260B	ND		4.2	0.72	ug/kg	1

PQL = Practical quantitation limit
B = Detected in the method blank
E = Quantitation of compound exceeded the calibration range
ND = Not detected at or above the MDL
J = Estimated result < PQL and ≥ MDL
P = The RPD between two GC columns exceeds 40%
Where applicable, all soil sample analysis are reported on a dry weight basis unless flagged with a "W"
N = Recovery is out of criteria
H = Out of holding time

Volatile Organic Compounds by GC/MS

Client: ARCADIS U.S., Inc.	Laboratory ID: LI16010-015
Description: F39TWS13 (58-60)(091410)	Matrix: Solid
Date Sampled: 09/14/2010 1855	% Solids: 83.4 09/16/2010 1859
Date Received: 09/16/2010	

Run	Prep Method	Analytical Method	Dilution	Analysis Date	Analyst	Prep Date	Batch	Sample Wt.(g)
1	5035	8260B	1	09/17/2010 1347	DLB		42596	7.08
2	5035	8260B	1	09/17/2010 1903	DLB		42596	4.61

Parameter	CAS Number	Analytical Method	Result	Q	PQL	MDL	Units	Run
1,1,2-Trichloroethane	79-00-5	8260B	ND		4.2	0.67	ug/kg	1
Trichloroethene	79-01-6	8260B	3.7	J	6.5	2.5	ug/kg	2
Trichlorofluoromethane	75-69-4	8260B	ND		4.2	1.3	ug/kg	1
Vinyl chloride	75-01-4	8260B	ND		4.2	0.73	ug/kg	1
Xylenes (total)	1330-20-7	8260B	ND		4.2	2.5	ug/kg	1

Surrogate	Q	Run 1 % Recovery	Acceptance Limits	Q	Run 2 % Recovery	Acceptance Limits
1,2-Dichloroethane-d4		91	53-142		100	53-142
Bromofluorobenzene		89	47-138		91	47-138
Toluene-d8		100	68-124		103	68-124

PQL = Practical quantitation limit
ND = Not detected at or above the MDL
Where applicable, all soil sample analysis are reported on a dry weight basis unless flagged with a "W"
B = Detected in the method blank
J = Estimated result < PQL and ≥ MDL
E = Quantitation of compound exceeded the calibration range
P = The RPD between two GC columns exceeds 40%
N = Recovery is out of criteria
H = Out of holding time

Volatile Organic Compounds by GC/MS

Client: ARCADIS U.S., Inc.
Laboratory ID: LI16010-016
Description: F39TWS13 (60-62)(091410)
Matrix: Solid
Date Sampled: 09/14/2010 1900
% Solids: 78.2 09/16/2010 1859
Date Received: 09/16/2010

Run	Prep Method	Analytical Method	Dilution	Analysis Date	Analyst	Prep Date	Batch	Sample Wt.(g)
1	5035	8260B	1	09/16/2010 1929	AAE		42544	4.93

Parameter	CAS Number	Analytical Method	Result	Q	PQL	MDL	Units	Run
Acetone	67-64-1	8260B	41		26	8.7	ug/kg	1
Benzene	71-43-2	8260B	ND		6.5	1.4	ug/kg	1
Bromodichloromethane	75-27-4	8260B	ND		6.5	2.2	ug/kg	1
Bromoform	75-25-2	8260B	ND		6.5	0.91	ug/kg	1
Bromomethane (Methyl bromide)	74-83-9	8260B	ND		6.5	2.3	ug/kg	1
2-Butanone (MEK)	78-93-3	8260B	ND		13	3.1	ug/kg	1
Carbon disulfide	75-15-0	8260B	ND		6.5	1.7	ug/kg	1
Carbon tetrachloride	56-23-5	8260B	ND		6.5	2.3	ug/kg	1
Chlorobenzene	108-90-7	8260B	ND		6.5	2.2	ug/kg	1
Chloroethane	75-00-3	8260B	ND		6.5	1.7	ug/kg	1
Chloroform	67-66-3	8260B	ND		6.5	1.1	ug/kg	1
Chloromethane (Methyl chloride)	74-87-3	8260B	ND		6.5	1.3	ug/kg	1
Cyclohexane	110-82-7	8260B	ND		6.5	0.87	ug/kg	1
1,2-Dibromo-3-chloropropane (DBCP)	96-12-8	8260B	ND		6.5	1.9	ug/kg	1
Dibromochloromethane	124-48-1	8260B	ND		6.5	2.2	ug/kg	1
1,2-Dibromoethane (EDB)	106-93-4	8260B	ND		6.5	1.1	ug/kg	1
1,2-Dichlorobenzene	95-50-1	8260B	ND		6.5	2.2	ug/kg	1
1,3-Dichlorobenzene	541-73-1	8260B	ND		6.5	2.2	ug/kg	1
1,4-Dichlorobenzene	106-46-7	8260B	ND		6.5	2.2	ug/kg	1
Dichlorodifluoromethane	75-71-8	8260B	ND		6.5	2.1	ug/kg	1
1,1-Dichloroethane	75-34-3	8260B	ND		6.5	0.95	ug/kg	1
1,2-Dichloroethane	107-06-2	8260B	ND		6.5	1.3	ug/kg	1
1,1-Dichloroethene	75-35-4	8260B	ND		6.5	2.2	ug/kg	1
cis-1,2-Dichloroethene	156-59-2	8260B	ND		6.5	0.99	ug/kg	1
trans-1,2-Dichloroethene	156-60-5	8260B	ND		6.5	1.9	ug/kg	1
1,2-Dichloropropane	78-87-5	8260B	ND		6.5	1.2	ug/kg	1
cis-1,3-Dichloropropene	10061-01-5	8260B	ND		6.5	0.88	ug/kg	1
trans-1,3-Dichloropropene	10061-02-6	8260B	ND		6.5	1.1	ug/kg	1
Ethylbenzene	100-41-4	8260B	ND		6.5	2.2	ug/kg	1
2-Hexanone	591-78-6	8260B	ND		13	1.7	ug/kg	1
Isopropylbenzene	98-82-8	8260B	ND		6.5	1.0	ug/kg	1
Methyl acetate	79-20-9	8260B	ND		6.5	0.87	ug/kg	1
Methyl tertiary butyl ether (MTBE)	1634-04-4	8260B	ND		6.5	0.52	ug/kg	1
4-Methyl-2-pentanone	108-10-1	8260B	ND		13	1.9	ug/kg	1
Methylcyclohexane	108-87-2	8260B	ND		6.5	0.79	ug/kg	1
Methylene chloride	75-09-2	8260B	ND		6.5	3.4	ug/kg	1
Styrene	100-42-5	8260B	ND		6.5	1.4	ug/kg	1
1,1,2,2-Tetrachloroethane	79-34-5	8260B	ND		6.5	0.61	ug/kg	1
Tetrachloroethene	127-18-4	8260B	ND		6.5	0.65	ug/kg	1
Toluene	108-88-3	8260B	ND		6.5	2.2	ug/kg	1
1,1,2-Trichloro-1,2,2-Trifluoroethane	76-13-1	8260B	ND		6.5	2.7	ug/kg	1
1,2,4-Trichlorobenzene	120-82-1	8260B	ND		6.5	2.2	ug/kg	1
1,1,1-Trichloroethane	71-55-6	8260B	ND		6.5	1.1	ug/kg	1
1,1,2-Trichloroethane	79-00-5	8260B	ND		6.5	1.0	ug/kg	1

PQL = Practical quantitation limit
B = Detected in the method blank
E = Quantitation of compound exceeded the calibration range
ND = Not detected at or above the MDL
J = Estimated result < PQL and ≥ MDL
P = The RPD between two GC columns exceeds 40%
Where applicable, all soil sample analysis are reported on a dry weight basis unless flagged with a "W"
N = Recovery is out of criteria
H = Out of holding time

Volatile Organic Compounds by GC/MS

Client: ARCADIS U.S., Inc.	Laboratory ID: LI16010-016
Description: F39TWS13 (60-62)(091410)	Matrix: Solid
Date Sampled: 09/14/2010 1900	% Solids: 78.2 09/16/2010 1859
Date Received: 09/16/2010	

Run	Prep Method	Analytical Method	Dilution	Analysis Date	Analyst	Prep Date	Batch	Sample Wt.(g)
1	5035	8260B	1	09/16/2010 1929	AAE		42544	4.93

Parameter	CAS Number	Analytical Method	Result	Q	PQL	MDL	Units	Run
Trichloroethene	79-01-6	8260B	ND		6.5	2.5	ug/kg	1
Trichlorofluoromethane	75-69-4	8260B	ND		6.5	1.9	ug/kg	1
Vinyl chloride	75-01-4	8260B	ND		6.5	1.1	ug/kg	1
Xylenes (total)	1330-20-7	8260B	ND		6.5	3.8	ug/kg	1

Surrogate	Q	Run 1 % Recovery	Acceptance Limits
1,2-Dichloroethane-d4		92	53-142
Bromofluorobenzene		92	47-138
Toluene-d8		98	68-124

PQL = Practical quantitation limit
ND = Not detected at or above the MDL
Where applicable, all soil sample analysis are reported on a dry weight basis unless flagged with a "W"
B = Detected in the method blank
J = Estimated result < PQL and ≥ MDL
E = Quantitation of compound exceeded the calibration range
P = The RPD between two GC columns exceeds 40%
N = Recovery is out of criteria
H = Out of holding time

Volatile Organic Compounds by GC/MS

Client: ARCADIS U.S., Inc.
Laboratory ID: LI16010-017
Description: F39TWS13 (62-64)(091410)
Matrix: Solid
Date Sampled: 09/14/2010 1910
% Solids: 82.6 09/16/2010 1859
Date Received: 09/16/2010

Run	Prep Method	Analytical Method	Dilution	Analysis Date	Analyst	Prep Date	Batch	Sample Wt.(g)
1	5035	8260B	1	09/16/2010 1952	AAE		42544	6.13

Parameter	CAS Number	Analytical Method	Result	Q	PQL	MDL	Units	Run
Acetone	67-64-1	8260B	51		20	6.6	ug/kg	1
Benzene	71-43-2	8260B	ND		4.9	1.1	ug/kg	1
Bromodichloromethane	75-27-4	8260B	ND		4.9	1.7	ug/kg	1
Bromoform	75-25-2	8260B	ND		4.9	0.69	ug/kg	1
Bromomethane (Methyl bromide)	74-83-9	8260B	ND		4.9	1.8	ug/kg	1
2-Butanone (MEK)	78-93-3	8260B	ND		9.9	2.4	ug/kg	1
Carbon disulfide	75-15-0	8260B	3.8	J	4.9	1.3	ug/kg	1
Carbon tetrachloride	56-23-5	8260B	ND		4.9	1.8	ug/kg	1
Chlorobenzene	108-90-7	8260B	ND		4.9	1.7	ug/kg	1
Chloroethane	75-00-3	8260B	ND		4.9	1.3	ug/kg	1
Chloroform	67-66-3	8260B	ND		4.9	0.82	ug/kg	1
Chloromethane (Methyl chloride)	74-87-3	8260B	ND		4.9	0.99	ug/kg	1
Cyclohexane	110-82-7	8260B	ND		4.9	0.67	ug/kg	1
1,2-Dibromo-3-chloropropane (DBCP)	96-12-8	8260B	ND		4.9	1.5	ug/kg	1
Dibromochloromethane	124-48-1	8260B	ND		4.9	1.7	ug/kg	1
1,2-Dibromoethane (EDB)	106-93-4	8260B	ND		4.9	0.84	ug/kg	1
1,2-Dichlorobenzene	95-50-1	8260B	ND		4.9	1.7	ug/kg	1
1,3-Dichlorobenzene	541-73-1	8260B	ND		4.9	1.7	ug/kg	1
1,4-Dichlorobenzene	106-46-7	8260B	ND		4.9	1.7	ug/kg	1
Dichlorodifluoromethane	75-71-8	8260B	ND		4.9	1.6	ug/kg	1
1,1-Dichloroethane	75-34-3	8260B	ND		4.9	0.72	ug/kg	1
1,2-Dichloroethane	107-06-2	8260B	ND		4.9	0.99	ug/kg	1
1,1-Dichloroethene	75-35-4	8260B	ND		4.9	1.7	ug/kg	1
cis-1,2-Dichloroethene	156-59-2	8260B	5.3		4.9	0.75	ug/kg	1
trans-1,2-Dichloroethene	156-60-5	8260B	ND		4.9	1.5	ug/kg	1
1,2-Dichloropropane	78-87-5	8260B	ND		4.9	0.90	ug/kg	1
cis-1,3-Dichloropropene	10061-01-5	8260B	ND		4.9	0.67	ug/kg	1
trans-1,3-Dichloropropene	10061-02-6	8260B	ND		4.9	0.81	ug/kg	1
Ethylbenzene	100-41-4	8260B	ND		4.9	1.7	ug/kg	1
2-Hexanone	591-78-6	8260B	ND		9.9	1.3	ug/kg	1
Isopropylbenzene	98-82-8	8260B	ND		4.9	0.79	ug/kg	1
Methyl acetate	79-20-9	8260B	ND		4.9	0.66	ug/kg	1
Methyl tertiary butyl ether (MTBE)	1634-04-4	8260B	ND		4.9	0.39	ug/kg	1
4-Methyl-2-pentanone	108-10-1	8260B	ND		9.9	1.5	ug/kg	1
Methylcyclohexane	108-87-2	8260B	ND		4.9	0.60	ug/kg	1
Methylene chloride	75-09-2	8260B	ND		4.9	2.6	ug/kg	1
Styrene	100-42-5	8260B	ND		4.9	1.1	ug/kg	1
1,1,2,2-Tetrachloroethane	79-34-5	8260B	ND		4.9	0.46	ug/kg	1
Tetrachloroethene	127-18-4	8260B	41		4.9	0.49	ug/kg	1
Toluene	108-88-3	8260B	ND		4.9	1.7	ug/kg	1
1,1,2-Trichloro-1,2,2-Trifluoroethane	76-13-1	8260B	ND		4.9	2.1	ug/kg	1
1,2,4-Trichlorobenzene	120-82-1	8260B	ND		4.9	1.7	ug/kg	1
1,1,1-Trichloroethane	71-55-6	8260B	ND		4.9	0.84	ug/kg	1
1,1,2-Trichloroethane	79-00-5	8260B	ND		4.9	0.78	ug/kg	1

PQL = Practical quantitation limit
B = Detected in the method blank
E = Quantitation of compound exceeded the calibration range
ND = Not detected at or above the MDL
J = Estimated result < PQL and ≥ MDL
P = The RPD between two GC columns exceeds 40%
Where applicable, all soil sample analysis are reported on a dry weight basis unless flagged with a "W"
N = Recovery is out of criteria
H = Out of holding time

Volatile Organic Compounds by GC/MS

Client: ARCADIS U.S., Inc.	Laboratory ID: LI16010-017
Description: F39TWS13 (62-64)(091410)	Matrix: Solid
Date Sampled: 09/14/2010 1910	% Solids: 82.6 09/16/2010 1859
Date Received: 09/16/2010	

Run	Prep Method	Analytical Method	Dilution	Analysis Date	Analyst	Prep Date	Batch	Sample Wt.(g)
1	5035	8260B	1	09/16/2010 1952	AAE		42544	6.13

Parameter	CAS Number	Analytical Method	Result	Q	PQL	MDL	Units	Run
Trichloroethene	79-01-6	8260B	35		4.9	1.9	ug/kg	1
Trichlorofluoromethane	75-69-4	8260B	ND		4.9	1.5	ug/kg	1
Vinyl chloride	75-01-4	8260B	ND		4.9	0.85	ug/kg	1
Xylenes (total)	1330-20-7	8260B	ND		4.9	2.9	ug/kg	1

Surrogate	Q	Run 1 % Recovery	Acceptance Limits
1,2-Dichloroethane-d4		87	53-142
Bromofluorobenzene		88	47-138
Toluene-d8		95	68-124

PQL = Practical quantitation limit
ND = Not detected at or above the MDL
Where applicable, all soil sample analysis are reported on a dry weight basis unless flagged with a "W"
B = Detected in the method blank
J = Estimated result < PQL and ≥ MDL
E = Quantitation of compound exceeded the calibration range
P = The RPD between two GC columns exceeds 40%
N = Recovery is out of criteria
H = Out of holding time

Volatile Organic Compounds by GC/MS

Client: ARCADIS U.S., Inc.
Laboratory ID: LI16010-018
Description: F39TWS13 (64-66)(091410)
Matrix: Solid
Date Sampled: 09/14/2010 1920
% Solids: 80.6 09/16/2010 1859
Date Received: 09/16/2010

Run	Prep Method	Analytical Method	Dilution	Analysis Date	Analyst	Prep Date	Batch	Sample Wt.(g)
1	5035	8260B	1	09/17/2010 1753	DLB		42596	7.91

Parameter	CAS Number	Analytical Method	Result	Q	PQL	MDL	Units	Run
Acetone	67-64-1	8260B	55		16	5.3	ug/kg	1
Benzene	71-43-2	8260B	ND		3.9	0.86	ug/kg	1
Bromodichloromethane	75-27-4	8260B	ND		3.9	1.3	ug/kg	1
Bromoform	75-25-2	8260B	ND		3.9	0.55	ug/kg	1
Bromomethane (Methyl bromide)	74-83-9	8260B	ND		3.9	1.4	ug/kg	1
2-Butanone (MEK)	78-93-3	8260B	ND		7.8	1.9	ug/kg	1
Carbon disulfide	75-15-0	8260B	26		3.9	1.0	ug/kg	1
Carbon tetrachloride	56-23-5	8260B	ND		3.9	1.4	ug/kg	1
Chlorobenzene	108-90-7	8260B	ND		3.9	1.3	ug/kg	1
Chloroethane	75-00-3	8260B	ND		3.9	1.0	ug/kg	1
Chloroform	67-66-3	8260B	ND		3.9	0.65	ug/kg	1
Chloromethane (Methyl chloride)	74-87-3	8260B	ND		3.9	0.78	ug/kg	1
Cyclohexane	110-82-7	8260B	ND		3.9	0.53	ug/kg	1
1,2-Dibromo-3-chloropropane (DBCP)	96-12-8	8260B	ND		3.9	1.2	ug/kg	1
Dibromochloromethane	124-48-1	8260B	ND		3.9	1.3	ug/kg	1
1,2-Dibromoethane (EDB)	106-93-4	8260B	ND		3.9	0.67	ug/kg	1
1,2-Dichlorobenzene	95-50-1	8260B	ND		3.9	1.3	ug/kg	1
1,3-Dichlorobenzene	541-73-1	8260B	ND		3.9	1.3	ug/kg	1
1,4-Dichlorobenzene	106-46-7	8260B	ND		3.9	1.3	ug/kg	1
Dichlorodifluoromethane	75-71-8	8260B	ND		3.9	1.3	ug/kg	1
1,1-Dichloroethane	75-34-3	8260B	ND		3.9	0.57	ug/kg	1
1,2-Dichloroethane	107-06-2	8260B	ND		3.9	0.78	ug/kg	1
1,1-Dichloroethene	75-35-4	8260B	ND		3.9	1.3	ug/kg	1
cis-1,2-Dichloroethene	156-59-2	8260B	0.81	J	3.9	0.60	ug/kg	1
trans-1,2-Dichloroethene	156-60-5	8260B	ND		3.9	1.2	ug/kg	1
1,2-Dichloropropane	78-87-5	8260B	ND		3.9	0.71	ug/kg	1
cis-1,3-Dichloropropene	10061-01-5	8260B	ND		3.9	0.53	ug/kg	1
trans-1,3-Dichloropropene	10061-02-6	8260B	ND		3.9	0.64	ug/kg	1
Ethylbenzene	100-41-4	8260B	ND		3.9	1.3	ug/kg	1
2-Hexanone	591-78-6	8260B	ND		7.8	1.0	ug/kg	1
Isopropylbenzene	98-82-8	8260B	ND		3.9	0.63	ug/kg	1
Methyl acetate	79-20-9	8260B	ND		3.9	0.53	ug/kg	1
Methyl tertiary butyl ether (MTBE)	1634-04-4	8260B	ND		3.9	0.31	ug/kg	1
4-Methyl-2-pentanone	108-10-1	8260B	ND		7.8	1.2	ug/kg	1
Methylcyclohexane	108-87-2	8260B	ND		3.9	0.48	ug/kg	1
Methylene chloride	75-09-2	8260B	ND		3.9	2.0	ug/kg	1
Styrene	100-42-5	8260B	ND		3.9	0.86	ug/kg	1
1,1,2,2-Tetrachloroethane	79-34-5	8260B	ND		3.9	0.37	ug/kg	1
Tetrachloroethene	127-18-4	8260B	0.90	J	3.9	0.39	ug/kg	1
Toluene	108-88-3	8260B	ND		3.9	1.3	ug/kg	1
1,1,2-Trichloro-1,2,2-Trifluoroethane	76-13-1	8260B	ND		3.9	1.6	ug/kg	1
1,2,4-Trichlorobenzene	120-82-1	8260B	ND		3.9	1.3	ug/kg	1
1,1,1-Trichloroethane	71-55-6	8260B	ND		3.9	0.67	ug/kg	1
1,1,2-Trichloroethane	79-00-5	8260B	ND		3.9	0.62	ug/kg	1

PQL = Practical quantitation limit
B = Detected in the method blank
E = Quantitation of compound exceeded the calibration range
ND = Not detected at or above the MDL
J = Estimated result < PQL and ≥ MDL
P = The RPD between two GC columns exceeds 40%
Where applicable, all soil sample analysis are reported on a dry weight basis unless flagged with a "W"
N = Recovery is out of criteria
H = Out of holding time

Volatile Organic Compounds by GC/MS

Client: ARCADIS U.S., Inc.	Laboratory ID: LI16010-018
Description: F39TWS13 (64-66)(091410)	Matrix: Solid
Date Sampled: 09/14/2010 1920	% Solids: 80.6 09/16/2010 1859
Date Received: 09/16/2010	

Run	Prep Method	Analytical Method	Dilution	Analysis Date	Analyst	Prep Date	Batch	Sample Wt.(g)
1	5035	8260B	1	09/17/2010 1753	DLB		42596	7.91

Parameter	CAS Number	Analytical Method	Result	Q	PQL	MDL	Units	Run
Trichloroethene	79-01-6	8260B	ND		3.9	1.5	ug/kg	1
Trichlorofluoromethane	75-69-4	8260B	ND		3.9	1.2	ug/kg	1
Vinyl chloride	75-01-4	8260B	ND		3.9	0.67	ug/kg	1
Xylenes (total)	1330-20-7	8260B	ND		3.9	2.3	ug/kg	1

Surrogate	Q	Run 1 % Recovery	Acceptance Limits
1,2-Dichloroethane-d4		94	53-142
Bromofluorobenzene		83	47-138
Toluene-d8		97	68-124

PQL = Practical quantitation limit
ND = Not detected at or above the MDL
Where applicable, all soil sample analysis are reported on a dry weight basis unless flagged with a "W"
B = Detected in the method blank
J = Estimated result < PQL and ≥ MDL
E = Quantitation of compound exceeded the calibration range
P = The RPD between two GC columns exceeds 40%
N = Recovery is out of criteria
H = Out of holding time

Volatile Organic Compounds by GC/MS

Client: ARCADIS U.S., Inc.
Laboratory ID: LI16010-019
Description: F39TWS13 (66-68)(091410)
Matrix: Solid
Date Sampled: 09/14/2010 1925
% Solids: 79.8 09/16/2010 1859
Date Received: 09/16/2010

Run	Prep Method	Analytical Method	Dilution	Analysis Date	Analyst	Prep Date	Batch	Sample Wt.(g)
1	5035	8260B	1	09/17/2010 1816	DLB		42596	5.10

Parameter	CAS Number	Analytical Method	Result	Q	PQL	MDL	Units	Run
Acetone	67-64-1	8260B	41		25	8.2	ug/kg	1
Benzene	71-43-2	8260B	ND		6.1	1.4	ug/kg	1
Bromodichloromethane	75-27-4	8260B	ND		6.1	2.1	ug/kg	1
Bromoform	75-25-2	8260B	ND		6.1	0.86	ug/kg	1
Bromomethane (Methyl bromide)	74-83-9	8260B	ND		6.1	2.2	ug/kg	1
2-Butanone (MEK)	78-93-3	8260B	ND		12	2.9	ug/kg	1
Carbon disulfide	75-15-0	8260B	1.7	J	6.1	1.6	ug/kg	1
Carbon tetrachloride	56-23-5	8260B	ND		6.1	2.2	ug/kg	1
Chlorobenzene	108-90-7	8260B	ND		6.1	2.1	ug/kg	1
Chloroethane	75-00-3	8260B	ND		6.1	1.6	ug/kg	1
Chloroform	67-66-3	8260B	ND		6.1	1.0	ug/kg	1
Chloromethane (Methyl chloride)	74-87-3	8260B	ND		6.1	1.2	ug/kg	1
Cyclohexane	110-82-7	8260B	ND		6.1	0.83	ug/kg	1
1,2-Dibromo-3-chloropropane (DBCP)	96-12-8	8260B	ND		6.1	1.8	ug/kg	1
Dibromochloromethane	124-48-1	8260B	ND		6.1	2.1	ug/kg	1
1,2-Dibromoethane (EDB)	106-93-4	8260B	ND		6.1	1.0	ug/kg	1
1,2-Dichlorobenzene	95-50-1	8260B	ND		6.1	2.1	ug/kg	1
1,3-Dichlorobenzene	541-73-1	8260B	ND		6.1	2.1	ug/kg	1
1,4-Dichlorobenzene	106-46-7	8260B	ND		6.1	2.1	ug/kg	1
Dichlorodifluoromethane	75-71-8	8260B	ND		6.1	2.0	ug/kg	1
1,1-Dichloroethane	75-34-3	8260B	ND		6.1	0.90	ug/kg	1
1,2-Dichloroethane	107-06-2	8260B	ND		6.1	1.2	ug/kg	1
1,1-Dichloroethene	75-35-4	8260B	ND		6.1	2.1	ug/kg	1
cis-1,2-Dichloroethene	156-59-2	8260B	ND		6.1	0.93	ug/kg	1
trans-1,2-Dichloroethene	156-60-5	8260B	ND		6.1	1.8	ug/kg	1
1,2-Dichloropropane	78-87-5	8260B	ND		6.1	1.1	ug/kg	1
cis-1,3-Dichloropropene	10061-01-5	8260B	ND		6.1	0.84	ug/kg	1
trans-1,3-Dichloropropene	10061-02-6	8260B	ND		6.1	1.0	ug/kg	1
Ethylbenzene	100-41-4	8260B	ND		6.1	2.1	ug/kg	1
2-Hexanone	591-78-6	8260B	ND		12	1.6	ug/kg	1
Isopropylbenzene	98-82-8	8260B	ND		6.1	0.98	ug/kg	1
Methyl acetate	79-20-9	8260B	ND		6.1	0.82	ug/kg	1
Methyl tertiary butyl ether (MTBE)	1634-04-4	8260B	ND		6.1	0.49	ug/kg	1
4-Methyl-2-pentanone	108-10-1	8260B	ND		12	1.8	ug/kg	1
Methylcyclohexane	108-87-2	8260B	ND		6.1	0.75	ug/kg	1
Methylene chloride	75-09-2	8260B	ND		6.1	3.2	ug/kg	1
Styrene	100-42-5	8260B	ND		6.1	1.4	ug/kg	1
1,1,2,2-Tetrachloroethane	79-34-5	8260B	ND		6.1	0.58	ug/kg	1
Tetrachloroethene	127-18-4	8260B	ND		6.1	0.61	ug/kg	1
Toluene	108-88-3	8260B	ND		6.1	2.1	ug/kg	1
1,1,2-Trichloro-1,2,2-Trifluoroethane	76-13-1	8260B	ND		6.1	2.6	ug/kg	1
1,2,4-Trichlorobenzene	120-82-1	8260B	ND		6.1	2.1	ug/kg	1
1,1,1-Trichloroethane	71-55-6	8260B	ND		6.1	1.0	ug/kg	1
1,1,2-Trichloroethane	79-00-5	8260B	ND		6.1	0.97	ug/kg	1

PQL = Practical quantitation limit
B = Detected in the method blank
E = Quantitation of compound exceeded the calibration range
ND = Not detected at or above the MDL
J = Estimated result < PQL and ≥ MDL
P = The RPD between two GC columns exceeds 40%
Where applicable, all soil sample analysis are reported on a dry weight basis unless flagged with a "W"
N = Recovery is out of criteria
H = Out of holding time

Volatile Organic Compounds by GC/MS

Client: ARCADIS U.S., Inc.	Laboratory ID: LI16010-019
Description: F39TWS13 (66-68)(091410)	Matrix: Solid
Date Sampled: 09/14/2010 1925	% Solids: 79.8 09/16/2010 1859
Date Received: 09/16/2010	

Run	Prep Method	Analytical Method	Dilution	Analysis Date	Analyst	Prep Date	Batch	Sample Wt.(g)
1	5035	8260B	1	09/17/2010 1816	DLB		42596	5.10

Parameter	CAS Number	Analytical Method	Result	Q	PQL	MDL	Units	Run
Trichloroethene	79-01-6	8260B	ND		6.1	2.3	ug/kg	1
Trichlorofluoromethane	75-69-4	8260B	ND		6.1	1.8	ug/kg	1
Vinyl chloride	75-01-4	8260B	ND		6.1	1.1	ug/kg	1
Xylenes (total)	1330-20-7	8260B	ND		6.1	3.6	ug/kg	1

Surrogate	Q	Run 1 % Recovery	Acceptance Limits
1,2-Dichloroethane-d4		94	53-142
Bromofluorobenzene		88	47-138
Toluene-d8		97	68-124

PQL = Practical quantitation limit
ND = Not detected at or above the MDL
Where applicable, all soil sample analysis are reported on a dry weight basis unless flagged with a "W"
B = Detected in the method blank
J = Estimated result < PQL and ≥ MDL
E = Quantitation of compound exceeded the calibration range
P = The RPD between two GC columns exceeds 40%
N = Recovery is out of criteria
H = Out of holding time

Volatile Organic Compounds by GC/MS

Client: ARCADIS U.S., Inc.
Laboratory ID: LI16010-020
Description: F39TWS13 (68-70)(091410)
Matrix: Solid
Date Sampled: 09/14/2010 1935
% Solids: 57.1 09/16/2010 1859
Date Received: 09/16/2010

Run	Prep Method	Analytical Method	Dilution	Analysis Date	Analyst	Prep Date	Batch	Sample Wt.(g)
1	5035	8260B	1	09/17/2010 1410	DLB		42596	6.96

Parameter	CAS Number	Analytical Method	Result	Q	PQL	MDL	Units	Run
Acetone	67-64-1	8260B	67		25	8.4	ug/kg	1
Benzene	71-43-2	8260B	ND		6.3	1.4	ug/kg	1
Bromodichloromethane	75-27-4	8260B	ND		6.3	2.1	ug/kg	1
Bromoform	75-25-2	8260B	ND		6.3	0.88	ug/kg	1
Bromomethane (Methyl bromide)	74-83-9	8260B	ND		6.3	2.3	ug/kg	1
2-Butanone (MEK)	78-93-3	8260B	ND		13	3.0	ug/kg	1
Carbon disulfide	75-15-0	8260B	7.0		6.3	1.6	ug/kg	1
Carbon tetrachloride	56-23-5	8260B	ND		6.3	2.3	ug/kg	1
Chlorobenzene	108-90-7	8260B	ND		6.3	2.1	ug/kg	1
Chloroethane	75-00-3	8260B	ND		6.3	1.6	ug/kg	1
Chloroform	67-66-3	8260B	ND		6.3	1.0	ug/kg	1
Chloromethane (Methyl chloride)	74-87-3	8260B	ND		6.3	1.3	ug/kg	1
Cyclohexane	110-82-7	8260B	ND		6.3	0.85	ug/kg	1
1,2-Dibromo-3-chloropropane (DBCP)	96-12-8	8260B	ND		6.3	1.9	ug/kg	1
Dibromochloromethane	124-48-1	8260B	ND		6.3	2.1	ug/kg	1
1,2-Dibromoethane (EDB)	106-93-4	8260B	ND		6.3	1.1	ug/kg	1
1,2-Dichlorobenzene	95-50-1	8260B	ND		6.3	2.1	ug/kg	1
1,3-Dichlorobenzene	541-73-1	8260B	ND		6.3	2.1	ug/kg	1
1,4-Dichlorobenzene	106-46-7	8260B	ND		6.3	2.1	ug/kg	1
Dichlorodifluoromethane	75-71-8	8260B	ND		6.3	2.0	ug/kg	1
1,1-Dichloroethane	75-34-3	8260B	ND		6.3	0.92	ug/kg	1
1,2-Dichloroethane	107-06-2	8260B	ND		6.3	1.3	ug/kg	1
1,1-Dichloroethene	75-35-4	8260B	ND		6.3	2.1	ug/kg	1
cis-1,2-Dichloroethene	156-59-2	8260B	12		6.3	0.96	ug/kg	1
trans-1,2-Dichloroethene	156-60-5	8260B	ND		6.3	1.9	ug/kg	1
1,2-Dichloropropane	78-87-5	8260B	ND		6.3	1.1	ug/kg	1
cis-1,3-Dichloropropene	10061-01-5	8260B	ND		6.3	0.85	ug/kg	1
trans-1,3-Dichloropropene	10061-02-6	8260B	ND		6.3	1.0	ug/kg	1
Ethylbenzene	100-41-4	8260B	ND		6.3	2.1	ug/kg	1
2-Hexanone	591-78-6	8260B	ND		13	1.6	ug/kg	1
Isopropylbenzene	98-82-8	8260B	ND		6.3	1.0	ug/kg	1
Methyl acetate	79-20-9	8260B	ND		6.3	0.84	ug/kg	1
Methyl tertiary butyl ether (MTBE)	1634-04-4	8260B	ND		6.3	0.50	ug/kg	1
4-Methyl-2-pentanone	108-10-1	8260B	ND		13	1.9	ug/kg	1
Methylcyclohexane	108-87-2	8260B	ND		6.3	0.77	ug/kg	1
Methylene chloride	75-09-2	8260B	ND		6.3	3.3	ug/kg	1
Styrene	100-42-5	8260B	ND		6.3	1.4	ug/kg	1
1,1,2,2-Tetrachloroethane	79-34-5	8260B	ND		6.3	0.59	ug/kg	1
Tetrachloroethene	127-18-4	8260B	4.1	J	6.3	0.63	ug/kg	1
Toluene	108-88-3	8260B	ND		6.3	2.1	ug/kg	1
1,1,2-Trichloro-1,2,2-Trifluoroethane	76-13-1	8260B	ND		6.3	2.6	ug/kg	1
1,2,4-Trichlorobenzene	120-82-1	8260B	ND		6.3	2.1	ug/kg	1
1,1,1-Trichloroethane	71-55-6	8260B	ND		6.3	1.1	ug/kg	1
1,1,2-Trichloroethane	79-00-5	8260B	ND		6.3	0.99	ug/kg	1

PQL = Practical quantitation limit
B = Detected in the method blank
E = Quantitation of compound exceeded the calibration range
ND = Not detected at or above the MDL
J = Estimated result < PQL and ≥ MDL
P = The RPD between two GC columns exceeds 40%
Where applicable, all soil sample analysis are reported on a dry weight basis unless flagged with a "W"
N = Recovery is out of criteria
H = Out of holding time

Volatile Organic Compounds by GC/MS

Client: ARCADIS U.S., Inc.	Laboratory ID: LI16010-020
Description: F39TWS13 (68-70)(091410)	Matrix: Solid
Date Sampled: 09/14/2010 1935	% Solids: 57.1 09/16/2010 1859
Date Received: 09/16/2010	

Run	Prep Method	Analytical Method	Dilution	Analysis Date	Analyst	Prep Date	Batch	Sample Wt.(g)
1	5035	8260B	1	09/17/2010 1410	DLB		42596	6.96

Parameter	CAS Number	Analytical Method	Result	Q	PQL	MDL	Units	Run
Trichloroethene	79-01-6	8260B	37		6.3	2.4	ug/kg	1
Trichlorofluoromethane	75-69-4	8260B	ND		6.3	1.9	ug/kg	1
Vinyl chloride	75-01-4	8260B	ND		6.3	1.1	ug/kg	1
Xylenes (total)	1330-20-7	8260B	ND		6.3	3.6	ug/kg	1

Surrogate	Q	Run 1 % Recovery	Acceptance Limits
1,2-Dichloroethane-d4		86	53-142
Bromofluorobenzene		80	47-138
Toluene-d8		95	68-124

PQL = Practical quantitation limit
ND = Not detected at or above the MDL
Where applicable, all soil sample analysis are reported on a dry weight basis unless flagged with a "W"
B = Detected in the method blank
J = Estimated result < PQL and ≥ MDL
E = Quantitation of compound exceeded the calibration range
P = The RPD between two GC columns exceeds 40%
N = Recovery is out of criteria
H = Out of holding time

QC Summary

Volatile Organic Compounds by GC/MS - MB

Sample ID: LQ42544-001
Batch: 42544
Analytical Method: 8260B

Matrix: Solid
Prep Method: 5035

Parameter	Result	Q	Dil	PQL	MDL	Units	Analysis Date
Acetone	ND		1	20	6.7	ug/kg	09/16/2010 1210
Benzene	ND		1	5.0	1.1	ug/kg	09/16/2010 1210
Bromodichloromethane	ND		1	5.0	1.7	ug/kg	09/16/2010 1210
Bromoform	ND		1	5.0	0.70	ug/kg	09/16/2010 1210
Bromomethane (Methyl bromide)	ND		1	5.0	1.8	ug/kg	09/16/2010 1210
2-Butanone (MEK)	ND		1	10	2.4	ug/kg	09/16/2010 1210
Carbon disulfide	ND		1	5.0	1.3	ug/kg	09/16/2010 1210
Carbon tetrachloride	ND		1	5.0	1.8	ug/kg	09/16/2010 1210
Chlorobenzene	ND		1	5.0	1.7	ug/kg	09/16/2010 1210
Chloroethane	ND		1	5.0	1.3	ug/kg	09/16/2010 1210
Chloroform	ND		1	5.0	0.83	ug/kg	09/16/2010 1210
Chloromethane (Methyl chloride)	ND		1	5.0	1.0	ug/kg	09/16/2010 1210
Cyclohexane	ND		1	5.0	0.67	ug/kg	09/16/2010 1210
1,2-Dibromo-3-chloropropane (DBCP)	ND		1	5.0	1.5	ug/kg	09/16/2010 1210
Dibromochloromethane	ND		1	5.0	1.7	ug/kg	09/16/2010 1210
1,2-Dibromoethane (EDB)	ND		1	5.0	0.85	ug/kg	09/16/2010 1210
1,3-Dichlorobenzene	ND		1	5.0	1.7	ug/kg	09/16/2010 1210
1,2-Dichlorobenzene	ND		1	5.0	1.7	ug/kg	09/16/2010 1210
1,4-Dichlorobenzene	ND		1	5.0	1.7	ug/kg	09/16/2010 1210
Dichlorodifluoromethane	ND		1	5.0	1.6	ug/kg	09/16/2010 1210
1,1-Dichloroethane	ND		1	5.0	0.73	ug/kg	09/16/2010 1210
1,2-Dichloroethane	ND		1	5.0	1.0	ug/kg	09/16/2010 1210
1,1-Dichloroethene	ND		1	5.0	1.7	ug/kg	09/16/2010 1210
cis-1,2-Dichloroethene	ND		1	5.0	0.76	ug/kg	09/16/2010 1210
trans-1,2-Dichloroethene	ND		1	5.0	1.5	ug/kg	09/16/2010 1210
1,2-Dichloropropane	ND		1	5.0	0.91	ug/kg	09/16/2010 1210
cis-1,3-Dichloropropene	ND		1	5.0	0.68	ug/kg	09/16/2010 1210
trans-1,3-Dichloropropene	ND		1	5.0	0.82	ug/kg	09/16/2010 1210
Ethylbenzene	ND		1	5.0	1.7	ug/kg	09/16/2010 1210
2-Hexanone	ND		1	10	1.3	ug/kg	09/16/2010 1210
Isopropylbenzene	ND		1	5.0	0.80	ug/kg	09/16/2010 1210
Methyl acetate	ND		1	5.0	0.67	ug/kg	09/16/2010 1210
Methyl tertiary butyl ether (MTBE)	ND		1	5.0	0.40	ug/kg	09/16/2010 1210
4-Methyl-2-pentanone	ND		1	10	1.5	ug/kg	09/16/2010 1210
Methylcyclohexane	ND		1	5.0	0.61	ug/kg	09/16/2010 1210
Methylene chloride	ND		1	5.0	2.6	ug/kg	09/16/2010 1210
Styrene	ND		1	5.0	1.1	ug/kg	09/16/2010 1210
1,1,2,2-Tetrachloroethane	ND		1	5.0	0.47	ug/kg	09/16/2010 1210
Tetrachloroethene	ND		1	5.0	0.50	ug/kg	09/16/2010 1210
Toluene	ND		1	5.0	1.7	ug/kg	09/16/2010 1210
1,1,2-Trichloro-1,2,2-Trifluoroethane	ND		1	5.0	2.1	ug/kg	09/16/2010 1210
1,2,4-Trichlorobenzene	ND		1	5.0	1.7	ug/kg	09/16/2010 1210
1,1,2-Trichloroethane	ND		1	5.0	0.79	ug/kg	09/16/2010 1210
1,1,1-Trichloroethane	ND		1	5.0	0.85	ug/kg	09/16/2010 1210

PQL = Practical quantitation limit
ND = Not detected at or above the MDL
P = The RPD between two GC columns exceeds 40%
J = Estimated result < PQL and ≥ MDL
N - Recovery is out of criteria
+ - RPD is out of criteria

Where applicable, all soil sample analysis are reported on a dry weight basis unless flagged with a "W"

Note: Calculations are performed before rounding to avoid round-off errors in calculated results

Volatile Organic Compounds by GC/MS - MB

Sample ID: LQ42544-001
Batch: 42544
Analytical Method: 8260B

Matrix: Solid
Prep Method: 5035

Parameter	Result	Q	Dil	PQL	MDL	Units	Analysis Date
Trichloroethene	ND		1	5.0	1.9	ug/kg	09/16/2010 1210
Trichlorofluoromethane	ND		1	5.0	1.5	ug/kg	09/16/2010 1210
Vinyl chloride	ND		1	5.0	0.86	ug/kg	09/16/2010 1210
Xylenes (total)	ND		1	5.0	2.9	ug/kg	09/16/2010 1210

Surrogate	Q	% Rec	Acceptance Limit
Bromofluorobenzene		90	47-138
1,2-Dichloroethane-d4		92	53-142
Toluene-d8		103	68-124

PQL = Practical quantitation limit
ND = Not detected at or above the MDL
P = The RPD between two GC columns exceeds 40%
J = Estimated result < PQL and ≥ MDL
N - Recovery is out of criteria
+ - RPD is out of criteria

Where applicable, all soil sample analysis are reported on a dry weight basis unless flagged with a "W"

Note: Calculations are performed before rounding to avoid round-off errors in calculated results

Volatile Organic Compounds by GC/MS - LCS

Sample ID: LQ42544-002
Batch: 42544
Analytical Method: 8260B

Matrix: Solid
Prep Method: 5035

Parameter	Spike Amount (ug/kg)	Result (ug/kg)	Q	Dil	% Rec	% Rec Limit	Analysis Date
Acetone	100	100		1	102	42-149	09/16/2010 1036
Benzene	50	53		1	106	69-123	09/16/2010 1036
Bromodichloromethane	50	54		1	107	69-121	09/16/2010 1036
Bromoform	50	45		1	91	61-119	09/16/2010 1036
Bromomethane (Methyl bromide)	50	58		1	117	35-144	09/16/2010 1036
2-Butanone (MEK)	100	92		1	92	57-148	09/16/2010 1036
Carbon disulfide	50	59		1	118	58-122	09/16/2010 1036
Carbon tetrachloride	50	58		1	116	58-136	09/16/2010 1036
Chlorobenzene	50	51		1	101	59-129	09/16/2010 1036
Chloroethane	50	59		1	119	50-132	09/16/2010 1036
Chloroform	50	55		1	110	71-125	09/16/2010 1036
Chloromethane (Methyl chloride)	50	49		1	98	34-134	09/16/2010 1036
Cyclohexane	50	58		1	116	53-139	09/16/2010 1036
1,2-Dibromo-3-chloropropane (DBCP)	50	40		1	80	55-125	09/16/2010 1036
Dibromochloromethane	50	48		1	96	66-119	09/16/2010 1036
1,2-Dibromoethane (EDB)	50	48		1	96	74-124	09/16/2010 1036
1,3-Dichlorobenzene	50	53		1	105	51-134	09/16/2010 1036
1,2-Dichlorobenzene	50	51		1	101	57-131	09/16/2010 1036
1,4-Dichlorobenzene	50	53		1	107	52-133	09/16/2010 1036
Dichlorodifluoromethane	50	35		1	70	10-157	09/16/2010 1036
1,1-Dichloroethane	50	55		1	110	71-127	09/16/2010 1036
1,2-Dichloroethane	50	53		1	105	67-129	09/16/2010 1036
1,1-Dichloroethene	50	55		1	110	69-138	09/16/2010 1036
cis-1,2-Dichloroethene	50	55		1	109	70-122	09/16/2010 1036
trans-1,2-Dichloroethene	50	55		1	111	68-131	09/16/2010 1036
1,2-Dichloropropane	50	53		1	107	72-124	09/16/2010 1036
cis-1,3-Dichloropropene	50	53		1	105	70-126	09/16/2010 1036
trans-1,3-Dichloropropene	50	50		1	100	70-124	09/16/2010 1036
Ethylbenzene	50	53		1	106	59-128	09/16/2010 1036
2-Hexanone	100	84		1	84	54-137	09/16/2010 1036
Isopropylbenzene	50	54		1	108	50-136	09/16/2010 1036
Methyl acetate	50	51		1	101	59-137	09/16/2010 1036
Methyl tertiary butyl ether (MTBE)	50	50		1	100	72-122	09/16/2010 1036
4-Methyl-2-pentanone	100	88		1	88	60-134	09/16/2010 1036
Methylcyclohexane	50	59		1	118	41-144	09/16/2010 1036
Methylene chloride	50	52		1	105	77-129	09/16/2010 1036
Styrene	50	53		1	106	54-136	09/16/2010 1036
1,1,2,2-Tetrachloroethane	50	43		1	86	69-132	09/16/2010 1036
Tetrachloroethene	50	53		1	105	70-130	09/16/2010 1036
Toluene	50	55		1	110	61-129	09/16/2010 1036
1,1,2-Trichloro-1,2,2-Trifluoroethane	50	60		1	120	49-136	09/16/2010 1036
1,2,4-Trichlorobenzene	50	55		1	110	34-145	09/16/2010 1036
1,1,2-Trichloroethane	50	44		1	89	55-128	09/16/2010 1036
1,1,1-Trichloroethane	50	60		1	119	63-128	09/16/2010 1036

PQL = Practical quantitation limit
ND = Not detected at or above the MDL
P = The RPD between two GC columns exceeds 40%
J = Estimated result < PQL and ≥ MDL
N - Recovery is out of criteria
+ - RPD is out of criteria

Where applicable, all soil sample analysis are reported on a dry weight basis unless flagged with a "W"

Note: Calculations are performed before rounding to avoid round-off errors in calculated results

Volatile Organic Compounds by GC/MS - LCS

Sample ID: LQ42544-002
Batch: 42544
Analytical Method: 8260B

Matrix: Solid
Prep Method: 5035

Parameter	Spike Amount (ug/kg)	Result (ug/kg)	Q	Dil	% Rec	% Rec Limit	Analysis Date
Trichloroethene	50	52		1	104	62-126	09/16/2010 1036
Trichlorofluoromethane	50	52		1	103	45-138	09/16/2010 1036
Vinyl chloride	50	56		1	112	42-132	09/16/2010 1036
Xylenes (total)	100	110		1	108	58-128	09/16/2010 1036

Surrogate	Q	% Rec	Acceptance Limit
Bromofluorobenzene		102	47-138
1,2-Dichloroethane-d4		92	53-142
Toluene-d8		107	68-124

PQL = Practical quantitation limit
ND = Not detected at or above the MDL
P = The RPD between two GC columns exceeds 40%
J = Estimated result < PQL and ≥ MDL
N - Recovery is out of criteria
+ - RPD is out of criteria

Where applicable, all soil sample analysis are reported on a dry weight basis unless flagged with a "W"

Note: Calculations are performed before rounding to avoid round-off errors in calculated results

Volatile Organic Compounds by GC/MS - LCSD

Sample ID: LQ42544-003
Batch: 42544
Analytical Method: 8260B

Matrix: Solid
Prep Method: 5035

Parameter	Spike Amount (ug/kg)	Result (ug/kg)	Q	Dil	% Rec	% RPD	% Rec Limit	% RPD Limit	Analysis Date
Acetone	100	110		1	106	4.2	42-149	20	09/16/2010 1100
Benzene	50	53		1	107	0.85	69-123	20	09/16/2010 1100
Bromodichloromethane	50	55		1	110	2.3	69-121	20	09/16/2010 1100
Bromoform	50	48		1	97	6.0	61-119	20	09/16/2010 1100
Bromomethane (Methyl bromide)	50	56		1	113	3.5	35-144	20	09/16/2010 1100
2-Butanone (MEK)	100	98		1	98	6.3	57-148	20	09/16/2010 1100
Carbon disulfide	50	57		1	114	3.8	58-122	20	09/16/2010 1100
Carbon tetrachloride	50	57		1	113	2.0	58-136	20	09/16/2010 1100
Chlorobenzene	50	52		1	103	2.2	59-129	20	09/16/2010 1100
Chloroethane	50	48		1	97	20	50-132	20	09/16/2010 1100
Chloroform	50	55		1	111	0.89	71-125	20	09/16/2010 1100
Chloromethane (Methyl chloride)	50	48		1	96	2.1	34-134	20	09/16/2010 1100
Cyclohexane	50	56		1	112	3.9	53-139	20	09/16/2010 1100
1,2-Dibromo-3-chloropropane (DBCP)	50	39		1	78	2.2	55-125	20	09/16/2010 1100
Dibromochloromethane	50	50		1	99	3.4	66-119	20	09/16/2010 1100
1,2-Dibromoethane (EDB)	50	50		1	100	3.7	74-124	20	09/16/2010 1100
1,3-Dichlorobenzene	50	51		1	102	2.5	51-134	20	09/16/2010 1100
1,2-Dichlorobenzene	50	50		1	100	1.5	57-131	20	09/16/2010 1100
1,4-Dichlorobenzene	50	52		1	103	3.1	52-133	20	09/16/2010 1100
Dichlorodifluoromethane	50	33		1	65	6.4	10-157	20	09/16/2010 1100
1,1-Dichloroethane	50	54		1	109	1.6	71-127	20	09/16/2010 1100
1,2-Dichloroethane	50	55		1	110	4.2	67-129	20	09/16/2010 1100
1,1-Dichloroethene	50	56		1	112	1.5	69-138	20	09/16/2010 1100
cis-1,2-Dichloroethene	50	56		1	111	1.9	70-122	20	09/16/2010 1100
trans-1,2-Dichloroethene	50	57		1	113	2.1	68-131	20	09/16/2010 1100
1,2-Dichloropropane	50	53		1	106	0.82	72-124	20	09/16/2010 1100
cis-1,3-Dichloropropene	50	54		1	108	2.9	70-126	20	09/16/2010 1100
trans-1,3-Dichloropropene	50	52		1	104	3.6	70-124	20	09/16/2010 1100
Ethylbenzene	50	54		1	107	1.1	59-128	20	09/16/2010 1100
2-Hexanone	100	87		1	87	4.4	54-137	20	09/16/2010 1100
Isopropylbenzene	50	53		1	106	2.2	50-136	20	09/16/2010 1100
Methyl acetate	50	54		1	108	6.0	59-137	20	09/16/2010 1100
Methyl tertiary butyl ether (MTBE)	50	53		1	106	5.6	72-122	20	09/16/2010 1100
4-Methyl-2-pentanone	100	91		1	91	3.4	60-134	20	09/16/2010 1100
Methylcyclohexane	50	59		1	117	0.86	41-144	20	09/16/2010 1100
Methylene chloride	50	53		1	107	2.2	77-129	20	09/16/2010 1100
Styrene	50	54		1	109	2.4	54-136	20	09/16/2010 1100
1,1,2,2-Tetrachloroethane	50	44		1	88	3.0	69-132	20	09/16/2010 1100
Tetrachloroethene	50	53		1	107	1.7	70-130	20	09/16/2010 1100
Toluene	50	56		1	112	2.4	61-129	20	09/16/2010 1100
1,1,2-Trichloro-1,2,2-Trifluoroethane	50	60		1	120	0.038	49-136	20	09/16/2010 1100
1,2,4-Trichlorobenzene	50	50		1	101	8.9	34-145	20	09/16/2010 1100
1,1,2-Trichloroethane	50	47		1	94	5.5	55-128	20	09/16/2010 1100
1,1,1-Trichloroethane	50	58		1	116	2.3	63-128	20	09/16/2010 1100

PQL = Practical quantitation limit
ND = Not detected at or above the MDL
P = The RPD between two GC columns exceeds 40%
J = Estimated result < PQL and ≥ MDL
N - Recovery is out of criteria
+ - RPD is out of criteria

Where applicable, all soil sample analysis are reported on a dry weight basis unless flagged with a "W"

Note: Calculations are performed before rounding to avoid round-off errors in calculated results

Volatile Organic Compounds by GC/MS - LCSD

Sample ID: LQ42544-003
Batch: 42544
Analytical Method: 8260B

Matrix: Solid
Prep Method: 5035

Parameter	Spike Amount (ug/kg)	Result (ug/kg)	Q	Dil	% Rec	% RPD	% Rec Limit	% RPD Limit	Analysis Date
Trichloroethene	50	54		1	108	3.9	62-126	20	09/16/2010 1100
Trichlorofluoromethane	50	50		1	101	2.4	45-138	20	09/16/2010 1100
Vinyl chloride	50	54		1	109	3.3	42-132	20	09/16/2010 1100
Xylenes (total)	100	110		1	110	1.1	58-128	20	09/16/2010 1100

Surrogate	Q	% Rec	Acceptance Limit
Bromofluorobenzene		98	47-138
1,2-Dichloroethane-d4		91	53-142
Toluene-d8		104	68-124

PQL = Practical quantitation limit
ND = Not detected at or above the MDL
P = The RPD between two GC columns exceeds 40%
J = Estimated result < PQL and ≥ MDL
N - Recovery is out of criteria
+ - RPD is out of criteria

Where applicable, all soil sample analysis are reported on a dry weight basis unless flagged with a "W"

Note: Calculations are performed before rounding to avoid round-off errors in calculated results

Volatile Organic Compounds by GC/MS - MB

Sample ID: LQ42596-001
Batch: 42596
Analytical Method: 8260B

Matrix: Solid
Prep Method: 5035

Parameter	Result	Q	Dil	PQL	MDL	Units	Analysis Date
Acetone	ND		1	20	6.7	ug/kg	09/17/2010 1108
Benzene	ND		1	5.0	1.1	ug/kg	09/17/2010 1108
Bromodichloromethane	ND		1	5.0	1.7	ug/kg	09/17/2010 1108
Bromoform	ND		1	5.0	0.70	ug/kg	09/17/2010 1108
Bromomethane (Methyl bromide)	ND		1	5.0	1.8	ug/kg	09/17/2010 1108
2-Butanone (MEK)	ND		1	10	2.4	ug/kg	09/17/2010 1108
Carbon disulfide	ND		1	5.0	1.3	ug/kg	09/17/2010 1108
Carbon tetrachloride	ND		1	5.0	1.8	ug/kg	09/17/2010 1108
Chlorobenzene	ND		1	5.0	1.7	ug/kg	09/17/2010 1108
Chloroethane	ND		1	5.0	1.3	ug/kg	09/17/2010 1108
Chloroform	ND		1	5.0	0.83	ug/kg	09/17/2010 1108
Chloromethane (Methyl chloride)	ND		1	5.0	1.0	ug/kg	09/17/2010 1108
Cyclohexane	ND		1	5.0	0.67	ug/kg	09/17/2010 1108
1,2-Dibromo-3-chloropropane (DBCP)	ND		1	5.0	1.5	ug/kg	09/17/2010 1108
Dibromochloromethane	ND		1	5.0	1.7	ug/kg	09/17/2010 1108
1,2-Dibromoethane (EDB)	ND		1	5.0	0.85	ug/kg	09/17/2010 1108
1,3-Dichlorobenzene	ND		1	5.0	1.7	ug/kg	09/17/2010 1108
1,2-Dichlorobenzene	ND		1	5.0	1.7	ug/kg	09/17/2010 1108
1,4-Dichlorobenzene	ND		1	5.0	1.7	ug/kg	09/17/2010 1108
Dichlorodifluoromethane	ND		1	5.0	1.6	ug/kg	09/17/2010 1108
1,2-Dichloroethane	ND		1	5.0	1.0	ug/kg	09/17/2010 1108
1,1-Dichloroethane	ND		1	5.0	0.73	ug/kg	09/17/2010 1108
trans-1,2-Dichloroethene	ND		1	5.0	1.5	ug/kg	09/17/2010 1108
cis-1,2-Dichloroethene	ND		1	5.0	0.76	ug/kg	09/17/2010 1108
1,1-Dichloroethene	ND		1	5.0	1.7	ug/kg	09/17/2010 1108
1,2-Dichloropropane	ND		1	5.0	0.91	ug/kg	09/17/2010 1108
trans-1,3-Dichloropropene	ND		1	5.0	0.82	ug/kg	09/17/2010 1108
cis-1,3-Dichloropropene	ND		1	5.0	0.68	ug/kg	09/17/2010 1108
Ethylbenzene	ND		1	5.0	1.7	ug/kg	09/17/2010 1108
2-Hexanone	ND		1	10	1.3	ug/kg	09/17/2010 1108
Isopropylbenzene	ND		1	5.0	0.80	ug/kg	09/17/2010 1108
Methyl acetate	ND		1	5.0	0.67	ug/kg	09/17/2010 1108
Methyl tertiary butyl ether (MTBE)	ND		1	5.0	0.40	ug/kg	09/17/2010 1108
4-Methyl-2-pentanone	ND		1	10	1.5	ug/kg	09/17/2010 1108
Methylcyclohexane	ND		1	5.0	0.61	ug/kg	09/17/2010 1108
Methylene chloride	ND		1	5.0	2.6	ug/kg	09/17/2010 1108
Styrene	ND		1	5.0	1.1	ug/kg	09/17/2010 1108
1,1,2,2-Tetrachloroethane	ND		1	5.0	0.47	ug/kg	09/17/2010 1108
Tetrachloroethene	ND		1	5.0	0.50	ug/kg	09/17/2010 1108
Toluene	ND		1	5.0	1.7	ug/kg	09/17/2010 1108
1,1,2-Trichloro-1,2,2-Trifluoroethane	ND		1	5.0	2.1	ug/kg	09/17/2010 1108
1,2,4-Trichlorobenzene	ND		1	5.0	1.7	ug/kg	09/17/2010 1108
1,1,2-Trichloroethane	ND		1	5.0	0.79	ug/kg	09/17/2010 1108
1,1,1-Trichloroethane	ND		1	5.0	0.85	ug/kg	09/17/2010 1108

PQL = Practical quantitation limit
ND = Not detected at or above the MDL
P = The RPD between two GC columns exceeds 40%
J = Estimated result < PQL and ≥ MDL
N - Recovery is out of criteria
+ - RPD is out of criteria

Where applicable, all soil sample analysis are reported on a dry weight basis unless flagged with a "W"

Note: Calculations are performed before rounding to avoid round-off errors in calculated results

Volatile Organic Compounds by GC/MS - MB

Sample ID: LQ42596-001
Batch: 42596
Analytical Method: 8260B

Matrix: Solid
Prep Method: 5035

Parameter	Result	Q	Dil	PQL	MDL	Units	Analysis Date
Trichloroethene	ND		1	5.0	1.9	ug/kg	09/17/2010 1108
Trichlorofluoromethane	ND		1	5.0	1.5	ug/kg	09/17/2010 1108
Vinyl chloride	ND		1	5.0	0.86	ug/kg	09/17/2010 1108
Xylenes (total)	ND		1	5.0	2.9	ug/kg	09/17/2010 1108

Surrogate	Q	% Rec	Acceptance Limit
Bromofluorobenzene		92	47-138
1,2-Dichloroethane-d4		86	53-142
Toluene-d8		97	68-124

PQL = Practical quantitation limit
ND = Not detected at or above the MDL
P = The RPD between two GC columns exceeds 40%
J = Estimated result < PQL and ≥ MDL
N - Recovery is out of criteria
+ - RPD is out of criteria

Where applicable, all soil sample analysis are reported on a dry weight basis unless flagged with a "W"

Note: Calculations are performed before rounding to avoid round-off errors in calculated results

Volatile Organic Compounds by GC/MS - LCS

Sample ID: LQ42596-002
Batch: 42596
Analytical Method: 8260B

Matrix: Solid
Prep Method: 5035

Parameter	Spike Amount (ug/kg)	Result (ug/kg)	Q	Dil	% Rec	% Rec Limit	Analysis Date
Acetone	100	90		1	90	42-149	09/17/2010 0934
Benzene	50	52		1	105	69-123	09/17/2010 0934
Bromodichloromethane	50	52		1	104	69-121	09/17/2010 0934
Bromoform	50	46		1	92	61-119	09/17/2010 0934
Bromomethane (Methyl bromide)	50	52		1	105	35-144	09/17/2010 0934
2-Butanone (MEK)	100	80		1	80	57-148	09/17/2010 0934
Carbon disulfide	50	57		1	113	58-122	09/17/2010 0934
Carbon tetrachloride	50	56		1	112	58-136	09/17/2010 0934
Chlorobenzene	50	53		1	107	59-129	09/17/2010 0934
Chloroethane	50	47		1	94	50-132	09/17/2010 0934
Chloroform	50	52		1	104	71-125	09/17/2010 0934
Chloromethane (Methyl chloride)	50	48		1	95	34-134	09/17/2010 0934
Cyclohexane	50	53		1	106	53-139	09/17/2010 0934
1,2-Dibromo-3-chloropropane (DBCP)	50	40		1	79	55-125	09/17/2010 0934
Dibromochloromethane	50	49		1	97	66-119	09/17/2010 0934
1,2-Dibromoethane (EDB)	50	48		1	97	74-124	09/17/2010 0934
1,3-Dichlorobenzene	50	56		1	113	51-134	09/17/2010 0934
1,2-Dichlorobenzene	50	53		1	107	57-131	09/17/2010 0934
1,4-Dichlorobenzene	50	56		1	113	52-133	09/17/2010 0934
Dichlorodifluoromethane	50	32		1	64	10-157	09/17/2010 0934
1,2-Dichloroethane	50	50		1	100	67-129	09/17/2010 0934
1,1-Dichloroethane	50	52		1	104	71-127	09/17/2010 0934
trans-1,2-Dichloroethene	50	55		1	109	68-131	09/17/2010 0934
cis-1,2-Dichloroethene	50	53		1	106	70-122	09/17/2010 0934
1,1-Dichloroethene	50	54		1	109	69-138	09/17/2010 0934
1,2-Dichloropropane	50	51		1	102	72-124	09/17/2010 0934
trans-1,3-Dichloropropene	50	51		1	102	70-124	09/17/2010 0934
cis-1,3-Dichloropropene	50	51		1	102	70-126	09/17/2010 0934
Ethylbenzene	50	56		1	112	59-128	09/17/2010 0934
2-Hexanone	100	77		1	77	54-137	09/17/2010 0934
Isopropylbenzene	50	57		1	114	50-136	09/17/2010 0934
Methyl acetate	50	43		1	87	59-137	09/17/2010 0934
Methyl tertiary butyl ether (MTBE)	50	46		1	93	72-122	09/17/2010 0934
4-Methyl-2-pentanone	100	77		1	77	60-134	09/17/2010 0934
Methylcyclohexane	50	58		1	115	41-144	09/17/2010 0934
Methylene chloride	50	50		1	101	77-129	09/17/2010 0934
Styrene	50	56		1	111	54-136	09/17/2010 0934
1,1,2,2-Tetrachloroethane	50	43		1	85	69-132	09/17/2010 0934
Tetrachloroethene	50	55		1	110	70-130	09/17/2010 0934
Toluene	50	55		1	109	61-129	09/17/2010 0934
1,1,2-Trichloro-1,2,2-Trifluoroethane	50	58		1	116	49-136	09/17/2010 0934
1,2,4-Trichlorobenzene	50	57		1	115	34-145	09/17/2010 0934
1,1,2-Trichloroethane	50	46		1	92	55-128	09/17/2010 0934
1,1,1-Trichloroethane	50	56		1	111	63-128	09/17/2010 0934

PQL = Practical quantitation limit
ND = Not detected at or above the MDL
P = The RPD between two GC columns exceeds 40%
J = Estimated result < PQL and ≥ MDL
N - Recovery is out of criteria
+ - RPD is out of criteria

Where applicable, all soil sample analysis are reported on a dry weight basis unless flagged with a "W"

Note: Calculations are performed before rounding to avoid round-off errors in calculated results

Volatile Organic Compounds by GC/MS - LCS

Sample ID: LQ42596-002
Batch: 42596
Analytical Method: 8260B

Matrix: Solid
Prep Method: 5035

Parameter	Spike Amount (ug/kg)	Result (ug/kg)	Q	Dil	% Rec	% Rec Limit	Analysis Date
Trichloroethene	50	53		1	105	62-126	09/17/2010 0934
Trichlorofluoromethane	50	47		1	94	45-138	09/17/2010 0934
Vinyl chloride	50	53		1	106	42-132	09/17/2010 0934
Xylenes (total)	100	110		1	113	58-128	09/17/2010 0934

Surrogate	Q	% Rec	Acceptance Limit
Bromofluorobenzene		99	47-138
1,2-Dichloroethane-d4		82	53-142
Toluene-d8		99	68-124

PQL = Practical quantitation limit
ND = Not detected at or above the MDL
P = The RPD between two GC columns exceeds 40%
J = Estimated result < PQL and ≥ MDL
N - Recovery is out of criteria
+ - RPD is out of criteria

Where applicable, all soil sample analysis are reported on a dry weight basis unless flagged with a "W"

Note: Calculations are performed before rounding to avoid round-off errors in calculated results

Volatile Organic Compounds by GC/MS - LCSD

Sample ID: LQ42596-003
Batch: 42596
Analytical Method: 8260B

Matrix: Solid
Prep Method: 5035

Parameter	Spike Amount (ug/kg)	Result (ug/kg)	Q	Dil	% Rec	% RPD	% Rec Limit	% RPD Limit	Analysis Date
Acetone	100	89		1	89	0.63	42-149	20	09/17/2010 0957
Benzene	50	49		1	99	5.8	69-123	20	09/17/2010 0957
Bromodichloromethane	50	51		1	103	1.2	69-121	20	09/17/2010 0957
Bromoform	50	45		1	91	1.5	61-119	20	09/17/2010 0957
Bromomethane (Methyl bromide)	50	51		1	101	3.5	35-144	20	09/17/2010 0957
2-Butanone (MEK)	100	82		1	82	2.6	57-148	20	09/17/2010 0957
Carbon disulfide	50	53		1	106	6.5	58-122	20	09/17/2010 0957
Carbon tetrachloride	50	52		1	104	7.7	58-136	20	09/17/2010 0957
Chlorobenzene	50	50		1	100	6.7	59-129	20	09/17/2010 0957
Chloroethane	50	45		1	90	4.5	50-132	20	09/17/2010 0957
Chloroform	50	50		1	100	3.9	71-125	20	09/17/2010 0957
Chloromethane (Methyl chloride)	50	45		1	90	5.7	34-134	20	09/17/2010 0957
Cyclohexane	50	49		1	98	7.9	53-139	20	09/17/2010 0957
1,2-Dibromo-3-chloropropane (DBCP)	50	39		1	78	1.7	55-125	20	09/17/2010 0957
Dibromochloromethane	50	48		1	96	1.8	66-119	20	09/17/2010 0957
1,2-Dibromoethane (EDB)	50	48		1	95	1.6	74-124	20	09/17/2010 0957
1,3-Dichlorobenzene	50	52		1	104	8.4	51-134	20	09/17/2010 0957
1,2-Dichlorobenzene	50	50		1	101	5.5	57-131	20	09/17/2010 0957
1,4-Dichlorobenzene	50	53		1	106	6.1	52-133	20	09/17/2010 0957
Dichlorodifluoromethane	50	29		1	59	8.5	10-157	20	09/17/2010 0957
1,2-Dichloroethane	50	48		1	96	3.9	67-129	20	09/17/2010 0957
1,1-Dichloroethane	50	50		1	99	4.8	71-127	20	09/17/2010 0957
trans-1,2-Dichloroethene	50	52		1	103	5.6	68-131	20	09/17/2010 0957
cis-1,2-Dichloroethene	50	50		1	101	5.0	70-122	20	09/17/2010 0957
1,1-Dichloroethene	50	51		1	101	7.0	69-138	20	09/17/2010 0957
1,2-Dichloropropane	50	49		1	98	3.8	72-124	20	09/17/2010 0957
trans-1,3-Dichloropropene	50	50		1	99	3.1	70-124	20	09/17/2010 0957
cis-1,3-Dichloropropene	50	50		1	99	2.4	70-126	20	09/17/2010 0957
Ethylbenzene	50	52		1	104	6.7	59-128	20	09/17/2010 0957
2-Hexanone	100	81		1	81	5.1	54-137	20	09/17/2010 0957
Isopropylbenzene	50	53		1	106	7.2	50-136	20	09/17/2010 0957
Methyl acetate	50	45		1	90	3.3	59-137	20	09/17/2010 0957
Methyl tertiary butyl ether (MTBE)	50	47		1	94	0.64	72-122	20	09/17/2010 0957
4-Methyl-2-pentanone	100	82		1	82	6.7	60-134	20	09/17/2010 0957
Methylcyclohexane	50	53		1	106	8.5	41-144	20	09/17/2010 0957
Methylene chloride	50	49		1	98	2.9	77-129	20	09/17/2010 0957
Styrene	50	52		1	104	6.4	54-136	20	09/17/2010 0957
1,1,2,2-Tetrachloroethane	50	44		1	87	2.0	69-132	20	09/17/2010 0957
Tetrachloroethene	50	51		1	102	7.5	70-130	20	09/17/2010 0957
Toluene	50	52		1	104	5.2	61-129	20	09/17/2010 0957
1,1,2-Trichloro-1,2,2-Trifluoroethane	50	54		1	108	7.1	49-136	20	09/17/2010 0957
1,2,4-Trichlorobenzene	50	53		1	106	8.3	34-145	20	09/17/2010 0957
1,1,2-Trichloroethane	50	45		1	89	2.4	55-128	20	09/17/2010 0957
1,1,1-Trichloroethane	50	53		1	107	3.8	63-128	20	09/17/2010 0957

PQL = Practical quantitation limit
ND = Not detected at or above the MDL
P = The RPD between two GC columns exceeds 40%
J = Estimated result < PQL and ≥ MDL
N - Recovery is out of criteria
+ - RPD is out of criteria

Where applicable, all soil sample analysis are reported on a dry weight basis unless flagged with a "W"

Note: Calculations are performed before rounding to avoid round-off errors in calculated results

Volatile Organic Compounds by GC/MS - LCSD

Sample ID: LQ42596-003
Batch: 42596
Analytical Method: 8260B

Matrix: Solid
Prep Method: 5035

Parameter	Spike Amount (ug/kg)	Result (ug/kg)	Q	Dil	% Rec	% RPD	% Rec Limit	% RPD Limit	Analysis Date
Trichloroethene	50	49		1	99	6.3	62-126	20	09/17/2010 0957
Trichlorofluoromethane	50	46		1	91	3.5	45-138	20	09/17/2010 0957
Vinyl chloride	50	51		1	101	4.9	42-132	20	09/17/2010 0957
Xylenes (total)	100	110		1	105	7.3	58-128	20	09/17/2010 0957

Surrogate	Q	% Rec	Acceptance Limit
Bromofluorobenzene		100	47-138
1,2-Dichloroethane-d4		83	53-142
Toluene-d8		101	68-124

PQL = Practical quantitation limit
ND = Not detected at or above the MDL
P = The RPD between two GC columns exceeds 40%
J = Estimated result < PQL and ≥ MDL
N - Recovery is out of criteria
+ - RPD is out of criteria

Where applicable, all soil sample analysis are reported on a dry weight basis unless flagged with a "W"

Note: Calculations are performed before rounding to avoid round-off errors in calculated results

Volatile Organic Compounds by GC/MS - MB

Sample ID: LQ42683-001
Batch: 42683
Analytical Method: 8260B

Matrix: Solid
Prep Method: 5035

Parameter	Result	Q	Dil	PQL	MDL	Units	Analysis Date
Tetrachloroethene	ND		50	250	25	ug/kg	09/20/2010 1155
Trichloroethene	ND		50	250	95	ug/kg	09/20/2010 1155

Surrogate	Q	% Rec	Acceptance Limit
Bromofluorobenzene		118	47-138
1,2-Dichloroethane-d4		111	53-142
Toluene-d8		119	68-124

PQL = Practical quantitation limit
ND = Not detected at or above the MDL
P = The RPD between two GC columns exceeds 40%
J = Estimated result < PQL and ≥ MDL
N - Recovery is out of criteria
+ - RPD is out of criteria

Where applicable, all soil sample analysis are reported on a dry weight basis unless flagged with a "W"

Note: Calculations are performed before rounding to avoid round-off errors in calculated results

Volatile Organic Compounds by GC/MS - LCS

Sample ID: LQ42683-002
Batch: 42683
Analytical Method: 8260B

Matrix: Solid
Prep Method: 5035

Parameter	Spike Amount (ug/kg)	Result (ug/kg)	Q	Dil	% Rec	% Rec Limit	Analysis Date
Tetrachloroethene	2500	3100		50	126	70-130	09/20/2010 1219
Trichloroethene	2500	3000		50	122	62-126	09/20/2010 1219

Surrogate	Q	% Rec	Acceptance Limit
Bromofluorobenzene		113	47-138
1,2-Dichloroethane-d4		106	53-142
Toluene-d8		117	68-124

PQL = Practical quantitation limit
ND = Not detected at or above the MDL
P = The RPD between two GC columns exceeds 40%
J = Estimated result < PQL and ≥ MDL
N - Recovery is out of criteria
+ - RPD is out of criteria

Where applicable, all soil sample analysis are reported on a dry weight basis unless flagged with a "W"

Note: Calculations are performed before rounding to avoid round-off errors in calculated results

Volatile Organic Compounds by GC/MS - LCSD

Sample ID: LQ42683-003
Batch: 42683
Analytical Method: 8260B

Matrix: Solid
Prep Method: 5035

Parameter	Spike Amount (ug/kg)	Result (ug/kg)	Q	Dil	% Rec	% RPD	% Rec Limit	% RPD Limit	Analysis Date
Tetrachloroethene	2500	3100		50	125	0.68	70-130	20	09/20/2010 1242
Trichloroethene	2500	3100		50	122	0.48	62-126	20	09/20/2010 1242

Surrogate	Q	% Rec	Acceptance Limit
Bromofluorobenzene		129	47-138
1,2-Dichloroethane-d4		121	53-142
Toluene-d8	N	132	68-124

PQL = Practical quantitation limit
ND = Not detected at or above the MDL
P = The RPD between two GC columns exceeds 40%
J = Estimated result < PQL and ≥ MDL
N - Recovery is out of criteria
+ - RPD is out of criteria

Where applicable, all soil sample analysis are reported on a dry weight basis unless flagged with a "W"

Note: Calculations are performed before rounding to avoid round-off errors in calculated results

Volatile Organic Compounds by GC/MS - MB

Sample ID: LQ42758-001
Batch: 42758
Analytical Method: 8260B

Matrix: Solid
Prep Method: 5035

Parameter	Result	Q	Dil	PQL	MDL	Units	Analysis Date
Acetone	ND		1	20	6.7	ug/kg	09/16/2010 1210
Benzene	ND		1	5.0	1.1	ug/kg	09/16/2010 1210
Bromodichloromethane	ND		1	5.0	1.7	ug/kg	09/16/2010 1210
Bromoform	ND		1	5.0	0.70	ug/kg	09/16/2010 1210
Bromomethane (Methyl bromide)	ND		1	5.0	1.8	ug/kg	09/16/2010 1210
2-Butanone (MEK)	ND		1	10	2.4	ug/kg	09/16/2010 1210
Carbon disulfide	ND		1	5.0	1.3	ug/kg	09/16/2010 1210
Carbon tetrachloride	ND		1	5.0	1.8	ug/kg	09/16/2010 1210
Chlorobenzene	ND		1	5.0	1.7	ug/kg	09/16/2010 1210
Chloroethane	ND		1	5.0	1.3	ug/kg	09/16/2010 1210
Chloroform	ND		1	5.0	0.83	ug/kg	09/16/2010 1210
Chloromethane (Methyl chloride)	ND		1	5.0	1.0	ug/kg	09/16/2010 1210
Cyclohexane	ND		1	5.0	0.67	ug/kg	09/16/2010 1210
1,2-Dibromo-3-chloropropane (DBCP)	ND		1	5.0	1.5	ug/kg	09/16/2010 1210
Dibromochloromethane	ND		1	5.0	1.7	ug/kg	09/16/2010 1210
1,2-Dibromoethane (EDB)	ND		1	5.0	0.85	ug/kg	09/16/2010 1210
1,4-Dichlorobenzene	ND		1	5.0	1.7	ug/kg	09/16/2010 1210
1,3-Dichlorobenzene	ND		1	5.0	1.7	ug/kg	09/16/2010 1210
1,2-Dichlorobenzene	ND		1	5.0	1.7	ug/kg	09/16/2010 1210
Dichlorodifluoromethane	ND		1	5.0	1.6	ug/kg	09/16/2010 1210
1,2-Dichloroethane	ND		1	5.0	1.0	ug/kg	09/16/2010 1210
1,1-Dichloroethane	ND		1	5.0	0.73	ug/kg	09/16/2010 1210
trans-1,2-Dichloroethene	ND		1	5.0	1.5	ug/kg	09/16/2010 1210
cis-1,2-Dichloroethene	ND		1	5.0	0.76	ug/kg	09/16/2010 1210
1,1-Dichloroethene	ND		1	5.0	1.7	ug/kg	09/16/2010 1210
1,2-Dichloropropane	ND		1	5.0	0.91	ug/kg	09/16/2010 1210
trans-1,3-Dichloropropene	ND		1	5.0	0.82	ug/kg	09/16/2010 1210
cis-1,3-Dichloropropene	ND		1	5.0	0.68	ug/kg	09/16/2010 1210
Ethylbenzene	ND		1	5.0	1.7	ug/kg	09/16/2010 1210
2-Hexanone	ND		1	10	1.3	ug/kg	09/16/2010 1210
Isopropylbenzene	ND		1	5.0	0.80	ug/kg	09/16/2010 1210
Methyl acetate	ND		1	5.0	0.67	ug/kg	09/16/2010 1210
Methyl tertiary butyl ether (MTBE)	ND		1	5.0	0.40	ug/kg	09/16/2010 1210
4-Methyl-2-pentanone	ND		1	10	1.5	ug/kg	09/16/2010 1210
Methylcyclohexane	ND		1	5.0	0.61	ug/kg	09/16/2010 1210
Methylene chloride	ND		1	5.0	2.6	ug/kg	09/16/2010 1210
Styrene	ND		1	5.0	1.1	ug/kg	09/16/2010 1210
1,1,2,2-Tetrachloroethane	ND		1	5.0	0.47	ug/kg	09/16/2010 1210
Toluene	ND		1	5.0	1.7	ug/kg	09/16/2010 1210
1,1,2-Trichloro-1,2,2-Trifluoroethane	ND		1	5.0	2.1	ug/kg	09/16/2010 1210
1,2,4-Trichlorobenzene	ND		1	5.0	1.7	ug/kg	09/16/2010 1210
1,1,2-Trichloroethane	ND		1	5.0	0.79	ug/kg	09/16/2010 1210
1,1,1-Trichloroethane	ND		1	5.0	0.85	ug/kg	09/16/2010 1210
Trichloroethene	ND		1	5.0	1.9	ug/kg	09/16/2010 1210

PQL = Practical quantitation limit
ND = Not detected at or above the MDL
P = The RPD between two GC columns exceeds 40%
J = Estimated result < PQL and ≥ MDL
N - Recovery is out of criteria
+ - RPD is out of criteria

Where applicable, all soil sample analysis are reported on a dry weight basis unless flagged with a "W"

Note: Calculations are performed before rounding to avoid round-off errors in calculated results

Volatile Organic Compounds by GC/MS - MB

Sample ID: LQ42758-001
Batch: 42758
Analytical Method: 8260B

Matrix: Solid
Prep Method: 5035

Parameter	Result	Q	Dil	PQL	MDL	Units	Analysis Date
Trichlorofluoromethane	ND		1	5.0	1.5	ug/kg	09/16/2010 1210
Vinyl chloride	ND		1	5.0	0.86	ug/kg	09/16/2010 1210
Xylenes (total)	ND		1	5.0	2.9	ug/kg	09/16/2010 1210

Surrogate	Q	% Rec	Acceptance Limit
Bromofluorobenzene		90	47-138
1,2-Dichloroethane-d4		92	53-142
Toluene-d8		103	68-124

PQL = Practical quantitation limit
ND = Not detected at or above the MDL
P = The RPD between two GC columns exceeds 40%
J = Estimated result < PQL and ≥ MDL
N - Recovery is out of criteria
+ - RPD is out of criteria

Where applicable, all soil sample analysis are reported on a dry weight basis unless flagged with a "W"

Note: Calculations are performed before rounding to avoid round-off errors in calculated results

Volatile Organic Compounds by GC/MS - LCS

Sample ID: LQ42758-002
Batch: 42758
Analytical Method: 8260B

Matrix: Solid
Prep Method: 5035

Parameter	Spike Amount (ug/kg)	Result (ug/kg)	Q	Dil	% Rec	% Rec Limit	Analysis Date
Acetone	100	100		1	102	42-149	09/16/2010 1036
Benzene	50	53		1	106	69-123	09/16/2010 1036
Bromodichloromethane	50	54		1	107	69-121	09/16/2010 1036
Bromoform	50	45		1	91	61-119	09/16/2010 1036
Bromomethane (Methyl bromide)	50	58		1	117	35-144	09/16/2010 1036
2-Butanone (MEK)	100	92		1	92	57-148	09/16/2010 1036
Carbon disulfide	50	59		1	118	58-122	09/16/2010 1036
Carbon tetrachloride	50	58		1	116	58-136	09/16/2010 1036
Chlorobenzene	50	51		1	101	59-129	09/16/2010 1036
Chloroethane	50	59		1	119	50-132	09/16/2010 1036
Chloroform	50	55		1	110	71-125	09/16/2010 1036
Chloromethane (Methyl chloride)	50	49		1	98	34-134	09/16/2010 1036
Cyclohexane	50	58		1	116	53-139	09/16/2010 1036
1,2-Dibromo-3-chloropropane (DBCP)	50	40		1	80	55-125	09/16/2010 1036
Dibromochloromethane	50	48		1	96	66-119	09/16/2010 1036
1,2-Dibromoethane (EDB)	50	48		1	96	74-124	09/16/2010 1036
1,4-Dichlorobenzene	50	53		1	107	52-133	09/16/2010 1036
1,3-Dichlorobenzene	50	53		1	105	51-134	09/16/2010 1036
1,2-Dichlorobenzene	50	51		1	101	57-131	09/16/2010 1036
Dichlorodifluoromethane	50	35		1	70	10-157	09/16/2010 1036
1,2-Dichloroethane	50	53		1	105	67-129	09/16/2010 1036
1,1-Dichloroethane	50	55		1	110	71-127	09/16/2010 1036
trans-1,2-Dichloroethene	50	55		1	111	68-131	09/16/2010 1036
cis-1,2-Dichloroethene	50	55		1	109	70-122	09/16/2010 1036
1,1-Dichloroethene	50	55		1	110	69-138	09/16/2010 1036
1,2-Dichloropropane	50	53		1	107	72-124	09/16/2010 1036
trans-1,3-Dichloropropene	50	50		1	100	70-124	09/16/2010 1036
cis-1,3-Dichloropropene	50	53		1	105	70-126	09/16/2010 1036
Ethylbenzene	50	53		1	106	59-128	09/16/2010 1036
2-Hexanone	100	84		1	84	54-137	09/16/2010 1036
Isopropylbenzene	50	54		1	108	50-136	09/16/2010 1036
Methyl acetate	50	51		1	101	59-137	09/16/2010 1036
Methyl tertiary butyl ether (MTBE)	50	50		1	100	72-122	09/16/2010 1036
4-Methyl-2-pentanone	100	88		1	88	60-134	09/16/2010 1036
Methylcyclohexane	50	59		1	118	41-144	09/16/2010 1036
Methylene chloride	50	52		1	105	77-129	09/16/2010 1036
Styrene	50	53		1	106	54-136	09/16/2010 1036
1,1,2,2-Tetrachloroethane	50	43		1	86	69-132	09/16/2010 1036
Toluene	50	55		1	110	61-129	09/16/2010 1036
1,1,2-Trichloro-1,2,2-Trifluoroethane	50	60		1	120	49-136	09/16/2010 1036
1,2,4-Trichlorobenzene	50	55		1	110	34-145	09/16/2010 1036
1,1,2-Trichloroethane	50	44		1	89	55-128	09/16/2010 1036
1,1,1-Trichloroethane	50	60		1	119	63-128	09/16/2010 1036
Trichloroethene	50	52		1	104	62-126	09/16/2010 1036

PQL = Practical quantitation limit
ND = Not detected at or above the MDL
P = The RPD between two GC columns exceeds 40%
J = Estimated result < PQL and ≥ MDL
N - Recovery is out of criteria
+ - RPD is out of criteria

Where applicable, all soil sample analysis are reported on a dry weight basis unless flagged with a "W"

Note: Calculations are performed before rounding to avoid round-off errors in calculated results

Volatile Organic Compounds by GC/MS - LCS

Sample ID: LQ42758-002
Batch: 42758
Analytical Method: 8260B

Matrix: Solid
Prep Method: 5035

Parameter	Spike Amount (ug/kg)	Result (ug/kg)	Q	Dil	% Rec	% Rec Limit	Analysis Date
Trichlorofluoromethane	50	52		1	103	45-138	09/16/2010 1036
Vinyl chloride	50	56		1	112	42-132	09/16/2010 1036
Xylenes (total)	100	110		1	108	58-128	09/16/2010 1036

Surrogate	Q	% Rec	Acceptance Limit
Bromofluorobenzene		102	47-138
1,2-Dichloroethane-d4		92	53-142
Toluene-d8		107	68-124

PQL = Practical quantitation limit
ND = Not detected at or above the MDL
P = The RPD between two GC columns exceeds 40%
J = Estimated result < PQL and ≥ MDL
N - Recovery is out of criteria
+ - RPD is out of criteria

Where applicable, all soil sample analysis are reported on a dry weight basis unless flagged with a "W"

Note: Calculations are performed before rounding to avoid round-off errors in calculated results

Volatile Organic Compounds by GC/MS - LCSD

Sample ID: LQ42758-003
Batch: 42758
Analytical Method: 8260B

Matrix: Solid
Prep Method: 5035

Parameter	Spike Amount (ug/kg)	Result (ug/kg)	Q	Dil	% Rec	% RPD	% Rec Limit	% RPD Limit	Analysis Date
Acetone	100	110		1	106	4.2	42-149	20	09/16/2010 1100
Benzene	50	53		1	107	0.85	69-123	20	09/16/2010 1100
Bromodichloromethane	50	55		1	110	2.3	69-121	20	09/16/2010 1100
Bromoform	50	48		1	97	6.0	61-119	20	09/16/2010 1100
Bromomethane (Methyl bromide)	50	56		1	113	3.5	35-144	20	09/16/2010 1100
2-Butanone (MEK)	100	98		1	98	6.3	57-148	20	09/16/2010 1100
Carbon disulfide	50	57		1	114	3.8	58-122	20	09/16/2010 1100
Carbon tetrachloride	50	57		1	113	2.0	58-136	20	09/16/2010 1100
Chlorobenzene	50	52		1	103	2.2	59-129	20	09/16/2010 1100
Chloroethane	50	48		1	97	20	50-132	20	09/16/2010 1100
Chloroform	50	55		1	111	0.89	71-125	20	09/16/2010 1100
Chloromethane (Methyl chloride)	50	48		1	96	2.1	34-134	20	09/16/2010 1100
Cyclohexane	50	56		1	112	3.9	53-139	20	09/16/2010 1100
1,2-Dibromo-3-chloropropane (DBCP)	50	39		1	78	2.2	55-125	20	09/16/2010 1100
Dibromochloromethane	50	50		1	99	3.4	66-119	20	09/16/2010 1100
1,2-Dibromoethane (EDB)	50	50		1	100	3.7	74-124	20	09/16/2010 1100
1,4-Dichlorobenzene	50	52		1	103	3.1	52-133	20	09/16/2010 1100
1,3-Dichlorobenzene	50	51		1	102	2.5	51-134	20	09/16/2010 1100
1,2-Dichlorobenzene	50	50		1	100	1.5	57-131	20	09/16/2010 1100
Dichlorodifluoromethane	50	33		1	65	6.4	10-157	20	09/16/2010 1100
1,2-Dichloroethane	50	55		1	110	4.2	67-129	20	09/16/2010 1100
1,1-Dichloroethane	50	54		1	109	1.6	71-127	20	09/16/2010 1100
trans-1,2-Dichloroethene	50	57		1	113	2.1	68-131	20	09/16/2010 1100
cis-1,2-Dichloroethene	50	56		1	111	1.9	70-122	20	09/16/2010 1100
1,1-Dichloroethene	50	56		1	112	1.5	69-138	20	09/16/2010 1100
1,2-Dichloropropane	50	53		1	106	0.82	72-124	20	09/16/2010 1100
trans-1,3-Dichloropropene	50	52		1	104	3.6	70-124	20	09/16/2010 1100
cis-1,3-Dichloropropene	50	54		1	108	2.9	70-126	20	09/16/2010 1100
Ethylbenzene	50	54		1	107	1.1	59-128	20	09/16/2010 1100
2-Hexanone	100	87		1	87	4.4	54-137	20	09/16/2010 1100
Isopropylbenzene	50	53		1	106	2.2	50-136	20	09/16/2010 1100
Methyl acetate	50	54		1	108	6.0	59-137	20	09/16/2010 1100
Methyl tertiary butyl ether (MTBE)	50	53		1	106	5.6	72-122	20	09/16/2010 1100
4-Methyl-2-pentanone	100	91		1	91	3.4	60-134	20	09/16/2010 1100
Methylcyclohexane	50	59		1	117	0.86	41-144	20	09/16/2010 1100
Methylene chloride	50	53		1	107	2.2	77-129	20	09/16/2010 1100
Styrene	50	54		1	109	2.4	54-136	20	09/16/2010 1100
1,1,2,2-Tetrachloroethane	50	44		1	88	3.0	69-132	20	09/16/2010 1100
Toluene	50	56		1	112	2.4	61-129	20	09/16/2010 1100
1,1,2-Trichloro-1,2,2-Trifluoroethane	50	60		1	120	0.038	49-136	20	09/16/2010 1100
1,2,4-Trichlorobenzene	50	50		1	101	8.9	34-145	20	09/16/2010 1100
1,1,2-Trichloroethane	50	47		1	94	5.5	55-128	20	09/16/2010 1100
1,1,1-Trichloroethane	50	58		1	116	2.3	63-128	20	09/16/2010 1100
Trichloroethene	50	54		1	108	3.9	62-126	20	09/16/2010 1100

PQL = Practical quantitation limit
ND = Not detected at or above the MDL
P = The RPD between two GC columns exceeds 40%
J = Estimated result < PQL and ≥ MDL
N - Recovery is out of criteria
+ - RPD is out of criteria

Where applicable, all soil sample analysis are reported on a dry weight basis unless flagged with a "W"

Note: Calculations are performed before rounding to avoid round-off errors in calculated results

Volatile Organic Compounds by GC/MS - LCSD

Sample ID: LQ42758-003
Batch: 42758
Analytical Method: 8260B

Matrix: Solid
Prep Method: 5035

Parameter	Spike Amount (ug/kg)	Result (ug/kg)	Q	Dil	% Rec	% RPD	% Rec Limit	% RPD Limit	Analysis Date
Trichlorofluoromethane	50	50		1	101	2.4	45-138	20	09/16/2010 1100
Vinyl chloride	50	54		1	109	3.3	42-132	20	09/16/2010 1100
Xylenes (total)	100	110		1	110	1.1	58-128	20	09/16/2010 1100

Surrogate	Q	% Rec	Acceptance Limit
Bromofluorobenzene		98	47-138
1,2-Dichloroethane-d4		91	53-142
Toluene-d8		104	68-124

PQL = Practical quantitation limit
ND = Not detected at or above the MDL
P = The RPD between two GC columns exceeds 40%
J = Estimated result < PQL and ≥ MDL
N - Recovery is out of criteria
+ - RPD is out of criteria

Where applicable, all soil sample analysis are reported on a dry weight basis unless flagged with a "W"

Note: Calculations are performed before rounding to avoid round-off errors in calculated results

SHEALY ENVIRONMENTAL SERVICES, INC.

SHEALY **Chain of Custody Record**

SHEALY ENVIRONMENTAL SERVICES, INC.
106 Vantage Point Drive
West Columbia, South Carolina 29172
Telephone No. (803) 791-9700 Fax No. (803) 791-9111

Number 107033

Client: ARCADIS	Report to Contact: Shelley Gibbons	Telephone No. / Fax No. / E-mail: 919-854-1282 / sgibbons@arcadis-us.com	Quote No.
Address: 801 Corporate Center Dr.	Sampler's Signature: X David Twamley	Waybill No.	Page 1 of 2
City: Raleigh; State: NC; Zip Code: 27607	Printed Name: David Twamley	Analysis (Attach list if more space is needed.)	
Project Name: FST-39 DPT Investigation			
Project No.: GPØ9HAFS.F39A.DGØFI	P.O. No.		Lot No. LI10010

Sample ID / Description (Containers for each sample may be combined on one line.)	Date	Time	G=Grab C=Composite	Matrix: Aqueous	Solid	Non-Aqueous	No. of Containers by Preservative Type: Unpres.	H2SO4	HNO3	HCl	NaOH	5035 Kit	VOCs (8260B)	Remarks / Cooler I.D.
F39TWS13 (30-32)	9/14/10	1555	G		X								X	
F39TWS13 (32-34)		1600			X								X	
F39TWS13 (34-36)		1605			X								X	
F39TWS13 (36-38)		1610			X								X	
F39TWS13 (38-40)		1620			X								X	
F39TWS13 (40-42)		1630			X								X	
F39TWS13 (42-44)		1640			X								X	
F39TWS13 (44-46)		1645			X								X	
F39TWS13 (46-48)		1715			X								X	
F39TWS13 (48-50)		1720			X								X	

Possible Hazard Identification: ☐ Non-Hazard ☐ Flammable ☐ Skin Irritant ☐ Poison ☐ Unknown

Sample Disposal: ☐ Return to Client ☒ Disposal by Lab

Note: All samples are retained for six weeks from receipt unless other arrangements are made.

Turn Around Time Required (Prior lab approval required for expedited TAT.): ☒ Standard ☐ Rush (Specify)

QC Requirements (Specify):

1. Relinquished by: David Twamley	Date: 9/15/10	Time: 1100	1. Received by:	Date:	Time:
2. Relinquished by:	Date:	Time:	2. Received by:	Date:	Time:
3. Relinquished by: FEDEX	Date: 9-16-10	Time: 1000	3. Laboratory received by:	Date: 9-16-10	Time: 1000

Comments:

LAB USE ONLY
Received on ice (Circle) (Yes) No Ice Pack
Receipt Temp. 2.3 °C

DISTRIBUTION: WHITE & YELLOW-Return to laboratory with Sample(s); PINK-Field/Client Copy

Document Number: F-AD-012 Effective Date: 08-04-02

SHEALY ENVIRONMENTAL SERVICES, INC.

SHEALY **Chain of Custody Record**

SHEALY ENVIRONMENTAL SERVICES, INC.
106 Vantage Point Drive
West Columbia, South Carolina 29172
Telephone No. (803) 791-9700 Fax No. (803) 791-9111

Number 107029

Client: ARCADIS
Address: 801 Corporate Center Dr.
City: Raleigh State: NC Zip Code: 27607
Project Name: FST-39 DPT Investigation
Project No.: GPØ9HAFS.F39A.DGØFI
P.O. No.:
Report to Contact: Shelley Gibbons
Sampler's Signature: X [signature]
Printed Name: David Twamley
Telephone No. / Fax No. / E-mail: 919-854-1282/sgibbons@arcadis-us.com
Waybill No.:
Quote No.:
Page 2 of 2
Analysis (Attach list if more space is needed.)
Lot No.: LE16010

Sample ID / Description (Containers for each sample may be combined on one line.)	Date	Time	G=Grab C=Composite	Matrix: Aqueous	Matrix: Solid	Matrix: Non-Aqueous	No. of Containers by Preservative Type: Unpres.	H2SO4	HNO3	HCl	NaOH	5035 Kit	VOCs (8260B)	Remarks / Cooler I.D.
F39TWS13 (50-52)	9/14/10	1755	G		X								X	
F39TWS13 (52-54)		1805			X								X	
F39TWS13 (54-56)		1825			X								X	
F39TWS13 (56-58)		1830			X								X	
F39TWS13 (58-60)		1855			X								X	
F39TWS13 (60-62)		1900			X								X	
F39TWS13 (62-64)		1910			X								X	
F39TWS13 (64-66)		1920			X								X	
F39TWS13 (66-68)		1925			X								X	
F39TWS13 (68-70)		1935			X								X	

Possible Hazard Identification: ☐ Non-Hazard ☐ Flammable ☐ Skin Irritant ☐ Poison ☐ Unknown
Sample Disposal: ☐ Return to Client ☒ Disposal by Lab
Note: All samples are retained for six weeks from receipt unless other arrangements are made.
Turn Around Time Required (Prior lab approval required for expedited TAT.): ☒ Standard ☐ Rush (Specify)
QC Requirements (Specify):

	Date	Time		Date	Time
1. Relinquished by: [signature]	9/15/10	1100	1. Received by:		
2. Relinquished by:			2. Received by:		
3. Relinquished by: FEDEX	9-16-10	1000	3. Laboratory received by: [signature]	9/16/10	1000

Comments:
LAB USE ONLY
Received on ice (Circle) Yes No Ice Pack
Receipt Temp. 2.3 °C

DISTRIBUTION: WHITE & YELLOW-Return to laboratory with Sample(s); PINK-Field/Client Copy

Document Number: F-AD-012 Effective Date: 08-04-02

Shealy Environmental Services, Inc.
Document Number: F-AD-016
Revision Number: 6

Page 1 of 1
Replaces Date: 09/22/06
Effective Date: 05/29/07

Sample Receipt Checklist (SRC)

Client: Arcadis Cooler Inspected by/date: WHC 9/10/10 Lot #: LE1C010

Means of receipt: ☐ SESI ☐ Client ☐ UPS ☑ FedEx ☐ Airborne Exp ☐ Other

Yes ☑	No ☐	NA ☐	1. Were custody seals present on the cooler?
Yes ☑	No ☐	NA ☐	2. If custody seals were present, were they intact and unbroken?

Cooler ID/temperature upon receipt 2.3 °C ___/___ °C ___/___ °C ___/___ °C
___/___ °C ___/___ °C ___/___ °C ___/___ °C

Method: ☐ Temperature Blank ☑ Against Bottles
Method of coolant: ☐ Wet Ice ☐ Blue Ice ☐ Dry Ice ☐ None

If response is No (or Yes for 14, 15, 16), an explanation/resolution must be provided.

Yes ☐	No ☐	NA ☑	3. If temperature of any cooler exceeded 6.0°C, was Project Manager notified? PM notified by SRC, phone, note (circle one), other: _____. (For coolers received via commercial courier, PMs are to be notified immediately.
Yes ☑	No ☐	NA ☐	4. Is the commercial courier's packing slip attached to this form?
Yes ☐	No ☑	NA ☐	5. Were proper custody procedures (relinquished/received) followed?
Yes ☑	No ☐	NA ☐	6. Were sample IDs listed?
Yes ☑	No ☐	NA ☐	7. Was collection date & time listed?
Yes ☑	No ☐	NA ☐	8. Were tests to be performed listed on the COC or was quote # provided?
Yes ☑	No ☐	NA ☐	9. Did all samples arrive in the proper containers for each test?
Yes ☑	No ☐	NA ☐	10. Did all container label information (ID, date, time) agree with COC?
Yes ☑	No ☐	NA ☐	11. Did all containers arrive in good condition (unbroken, lids on, etc.)?
Yes ☑	No ☐	NA ☐	12. Was adequate sample volume available?
Yes ☑	No ☐	NA ☐	13. Were all samples received within ½ the holding time or 48 hours, whichever comes first?
Yes ☐	No ☑	NA ☐	14. Were any samples containers missing?
Yes ☐	No ☑	NA ☐	15. Were there any excess samples not listed on COC?
Yes ☐	No ☐	NA ☑	16. Were bubbles present >"pea-size" (¼" or 6mm in diameter) in any VOA vials?
Yes ☐	No ☐	NA ☑	17. Were all metals/O&G/HEM/nutrient samples received at a pH of <2?
Yes ☐	No ☐	NA ☑	18. Were all cyanide and/or sulfide samples received at a pH >12?
Yes ☐	No ☐	NA ☑	19. Were all applicable NH3/TKN/cyanide/phenol/BNA/pest/PCB/herb (<0.2mg/L) and toxicity (<0.1mg/L) samples free of residual chlorine?
Yes ☐	No ☐	NA ☑	20. Were collection temperatures documented on the COC for NC samples?

Sample Preservation (Must be completed for any sample(s) incorrectly preserved or with headspace.)

Sample(s) _____ were received incorrectly preserved and were adjusted accordingly in sample receiving with _____ (H_2SO_4,HNO_3,HCl,NaOH) with the SR # (number)

Sample(s) _____ were received with bubbles >6 mm in diameter.

Sample(s) _____ were received with TRC >0.2 mg/L for NH3/TKN/cyanide/BNA/pest/PCB/herb.

Toxicity sample(s) _____ were received with TRC >0.1 mg/L and were analyzed by method 330.5

Corrective Action taken, if necessary:

Was client notified: Yes ☐ No ☐ Did client respond: Yes ☐ No ☐
SESI employee: _____ Date of response: _____
Comments: _____

Report of Analysis

ARCADIS U.S., Inc.
30 Patewood Drive
Suite 155
Greenville, SC 29615
Attention: Allison Fang

Project Name: FST-39 DPT Investigation

Project Number: GP09HAFS.F39A.DG0FI

Lot Number: LI17017

Date Completed: 09/23/2010

Nisreen Saikaly
Project Manager

This report shall not be reproduced, except in its entirety, without the written approval of Shealy Environmental Services, Inc.

The following non-paginated documents are considered part of this report: Chain of Custody Record and Sample Receipt Checklist.

LI17017

Case Narrative
ARCADIS U.S., Inc.
Lot Number: LI17017

This Report of Analysis contains the analytical result(s) for the sample(s) listed on the Sample Summary following this Case Narrative. The sample receiving date is documented in the header information associated with each sample.

Sample receipt, sample analysis, and data review have been performed in accordance with the most current approved NELAC standards, the Shealy Environmental Services, Inc. ("Shealy") Quality Assurance Management Plan (QAMP), standard operating procedures (SOPs), and Shealy policies. Any exceptions to the NELAC standards, the QAMP, SOPs or policies are qualified on the results page or discussed below.

If you have any questions regarding this report please contact the Shealy Project Manager listed on the cover page.

Volatile Organic Compounds

The LCS/LCSD recovery for Bromomethane (Methyl bromide) and Vinyl chloride exceeded method control limits in batch 42856; however, all other QA/QC criteria for the LCS/LCSD were within acceptance criteria and method control limits. The associated sample results were non-detect, therefore the results were reported and no corrective action was required.

Sample Summary

ARCADIS U.S., Inc.

Lot Number: LI17017

Sample Number	Sample ID	Matrix	Date Sampled	Date Received
001	F39TWW13 (30-35)	Aqueous	09/15/2010 0915	09/17/2010
002	F39TWW13 (35-40)	Aqueous	09/15/2010 0940	09/17/2010
003	F39TWW13 (40-45)	Aqueous	09/15/2010 1030	09/17/2010
004	F39TWW13 -DUP	Aqueous	09/15/2010	09/17/2010
005	F39TWW13 (45-50)	Aqueous	09/15/2010 1100	09/17/2010
006	F39TWW13 (50-55)	Aqueous	09/15/2010 1200	09/17/2010
007	Trip Blank	Aqueous	09/15/2010 0915	09/17/2010

(7 samples)

Executive Summary

ARCADIS U.S., Inc.

Lot Number: LI17017

Sample	Sample ID	Matrix	Parameter	Method	Result	Q	Units	Page
001	F39TWW13 (30-35)	Aqueous	Trichloroethene	8260B	0.46	J	ug/L	6
002	F39TWW13 (35-40)	Aqueous	trans-1,2-Dichloroethene	8260B	1.2	J	ug/L	7
002	F39TWW13 (35-40)	Aqueous	1,1-Dichloroethene	8260B	3.9		ug/L	7
002	F39TWW13 (35-40)	Aqueous	cis-1,2-Dichloroethene	8260B	320		ug/L	7
002	F39TWW13 (35-40)	Aqueous	Tetrachloroethene	8260B	210		ug/L	7
002	F39TWW13 (35-40)	Aqueous	Toluene	8260B	1.2	J	ug/L	7
002	F39TWW13 (35-40)	Aqueous	Trichloroethene	8260B	1200		ug/L	8
003	F39TWW13 (40-45)	Aqueous	Acetone	8260B	10		ug/L	9
003	F39TWW13 (40-45)	Aqueous	Benzene	8260B	0.53		ug/L	9
003	F39TWW13 (40-45)	Aqueous	cis-1,2-Dichloroethene	8260B	76		ug/L	9
003	F39TWW13 (40-45)	Aqueous	Tetrachloroethene	8260B	1.5		ug/L	9
003	F39TWW13 (40-45)	Aqueous	Toluene	8260B	0.61		ug/L	9
003	F39TWW13 (40-45)	Aqueous	Trichloroethene	8260B	74		ug/L	10
004	F39TWW13 -DUP	Aqueous	Benzene	8260B	0.45	J	ug/L	11
004	F39TWW13 -DUP	Aqueous	1,1-Dichloroethene	8260B	0.89		ug/L	11
004	F39TWW13 -DUP	Aqueous	cis-1,2-Dichloroethene	8260B	80		ug/L	11
004	F39TWW13 -DUP	Aqueous	Tetrachloroethene	8260B	1.8		ug/L	11
004	F39TWW13 -DUP	Aqueous	Toluene	8260B	0.55		ug/L	11
004	F39TWW13 -DUP	Aqueous	Trichloroethene	8260B	87		ug/L	12
005	F39TWW13 (45-50)	Aqueous	Acetone	8260B	22		ug/L	13
005	F39TWW13 (45-50)	Aqueous	Benzene	8260B	0.42	J	ug/L	13
005	F39TWW13 (45-50)	Aqueous	cis-1,2-Dichloroethene	8260B	0.94		ug/L	13
005	F39TWW13 (45-50)	Aqueous	Toluene	8260B	0.53		ug/L	13
005	F39TWW13 (45-50)	Aqueous	Trichloroethene	8260B	1.3		ug/L	14
006	F39TWW13 (50-55)	Aqueous	Benzene	8260B	0.35	J	ug/L	15
006	F39TWW13 (50-55)	Aqueous	Chloromethane (Methyl chloride)	8260B	0.77		ug/L	15
006	F39TWW13 (50-55)	Aqueous	cis-1,2-Dichloroethene	8260B	0.29	J	ug/L	15
006	F39TWW13 (50-55)	Aqueous	Toluene	8260B	0.43	J	ug/L	15
007	Trip Blank	Aqueous	Acetone	8260B	1.8	J	ug/L	17

(29 detections)

Volatile Organic Compounds by GC/MS

Client: ARCADIS U.S., Inc.
Laboratory ID: LI17017-001
Description: F39TWW13 (30-35)
Matrix: Aqueous
Date Sampled: 09/15/2010 0915
Date Received: 09/17/2010

Run	Prep Method	Analytical Method	Dilution	Analysis Date	Analyst	Prep Date	Batch
1	5030B	8260B	1	09/22/2010 0313	DLB		42856
2	5030B	8260B	1	09/23/2010 0210	DLB		42960

Parameter	CAS Number	Analytical Method	Result	Q	PQL	MDL	Units	Run
Acetone	67-64-1	8260B	ND		10	0.061	ug/L	1
Benzene	71-43-2	8260B	ND		0.50	0.027	ug/L	1
Bromodichloromethane	75-27-4	8260B	ND		0.50	0.17	ug/L	1
Bromoform	75-25-2	8260B	ND		0.50	0.010	ug/L	1
Bromomethane (Methyl bromide)	74-83-9	8260B	ND		0.50	0.20	ug/L	1
2-Butanone (MEK)	78-93-3	8260B	ND		10	2.0	ug/L	1
Carbon disulfide	75-15-0	8260B	ND		0.50	0.097	ug/L	1
Carbon tetrachloride	56-23-5	8260B	ND		0.50	0.085	ug/L	1
Chlorobenzene	108-90-7	8260B	ND		0.50	0.17	ug/L	1
Chloroethane	75-00-3	8260B	ND		0.50	0.17	ug/L	1
Chloroform	67-66-3	8260B	ND		0.50	0.17	ug/L	1
Chloromethane (Methyl chloride)	74-87-3	8260B	ND		0.50	0.17	ug/L	1
Cyclohexane	110-82-7	8260B	ND		0.50	0.30	ug/L	1
1,2-Dibromo-3-chloropropane (DBCP)	96-12-8	8260B	ND		0.50	0.069	ug/L	1
Dibromochloromethane	124-48-1	8260B	ND		0.50	0.17	ug/L	1
1,2-Dibromoethane (EDB)	106-93-4	8260B	ND		0.50	0.061	ug/L	1
1,3-Dichlorobenzene	541-73-1	8260B	ND		0.50	0.17	ug/L	1
1,2-Dichlorobenzene	95-50-1	8260B	ND		0.50	0.17	ug/L	1
1,4-Dichlorobenzene	106-46-7	8260B	ND		0.50	0.17	ug/L	1
Dichlorodifluoromethane	75-71-8	8260B	ND		0.50	0.071	ug/L	2
1,1-Dichloroethane	75-34-3	8260B	ND		0.50	0.054	ug/L	1
1,2-Dichloroethane	107-06-2	8260B	ND		0.50	0.023	ug/L	1
trans-1,2-Dichloroethene	156-60-5	8260B	ND		0.50	0.079	ug/L	1
1,1-Dichloroethene	75-35-4	8260B	ND		0.50	0.094	ug/L	1
cis-1,2-Dichloroethene	156-59-2	8260B	ND		0.50	0.087	ug/L	1
1,2-Dichloropropane	78-87-5	8260B	ND		0.50	0.081	ug/L	1
trans-1,3-Dichloropropene	10061-02-6	8260B	ND		0.50	0.18	ug/L	1
cis-1,3-Dichloropropene	10061-01-5	8260B	ND		0.50	0.090	ug/L	1
Ethylbenzene	100-41-4	8260B	ND		0.50	0.17	ug/L	1
2-Hexanone	591-78-6	8260B	ND		10	0.27	ug/L	1
Isopropylbenzene	98-82-8	8260B	ND		0.50	0.029	ug/L	1
Methyl acetate	79-20-9	8260B	ND		1.0	0.30	ug/L	1
Methyl tertiary butyl ether (MTBE)	1634-04-4	8260B	ND		0.50	0.019	ug/L	1
4-Methyl-2-pentanone	108-10-1	8260B	ND		10	0.31	ug/L	1
Methylcyclohexane	108-87-2	8260B	ND		5.0	0.95	ug/L	1
Methylene chloride	75-09-2	8260B	ND		0.50	0.17	ug/L	1
Styrene	100-42-5	8260B	ND		0.50	0.015	ug/L	1
1,1,2,2-Tetrachloroethane	79-34-5	8260B	ND		0.50	0.013	ug/L	1
Tetrachloroethene	127-18-4	8260B	ND		0.50	0.014	ug/L	1
Toluene	108-88-3	8260B	ND		0.50	0.17	ug/L	1
1,1,2-Trichloro-1,2,2-Trifluoroethane	76-13-1	8260B	ND		0.50	0.30	ug/L	1
1,2,4-Trichlorobenzene	120-82-1	8260B	ND		0.50	0.17	ug/L	1
1,1,1-Trichloroethane	71-55-6	8260B	ND		0.50	0.029	ug/L	1

PQL = Practical quantitation limit
B = Detected in the method blank
E = Quantitation of compound exceeded the calibration range
ND = Not detected at or above the MDL
J = Estimated result < PQL and ≥ MDL
P = The RPD between two GC columns exceeds 40%
Where applicable, all soil sample analysis are reported on a dry weight basis unless flagged with a "W"
N = Recovery is out of criteria
H = Out of holding time

Volatile Organic Compounds by GC/MS

Client: ARCADIS U.S., Inc.
Laboratory ID: LI17017-001
Description: F39TWW13 (30-35)
Matrix: Aqueous
Date Sampled: 09/15/2010 0915
Date Received: 09/17/2010

Run	Prep Method	Analytical Method	Dilution	Analysis Date	Analyst	Prep Date	Batch
1	5030B	8260B	1	09/22/2010 0313	DLB		42856
2	5030B	8260B	1	09/23/2010 0210	DLB		42960

Parameter	CAS Number	Analytical Method	Result	Q	PQL	MDL	Units	Run
1,1,2-Trichloroethane	79-00-5	8260B	ND		0.50	0.031	ug/L	1
Trichloroethene	79-01-6	8260B	0.46	J	0.50	0.024	ug/L	1
Trichlorofluoromethane	75-69-4	8260B	ND		0.50	0.051	ug/L	1
Vinyl chloride	75-01-4	8260B	ND		0.50	0.065	ug/L	1
Xylenes (total)	1330-20-7	8260B	ND		0.50	0.17	ug/L	1

Surrogate	Q	Run 1 % Recovery	Acceptance Limits	Q	Run 2 % Recovery	Acceptance Limits
1,2-Dichloroethane-d4		96	70-130		87	70-130
Bromofluorobenzene		96	70-130		91	70-130
Toluene-d8		105	70-130		88	70-130

PQL = Practical quantitation limit
B = Detected in the method blank
E = Quantitation of compound exceeded the calibration range
ND = Not detected at or above the MDL
J = Estimated result < PQL and ≥ MDL
P = The RPD between two GC columns exceeds 40%
Where applicable, all soil sample analysis are reported on a dry weight basis unless flagged with a "W"
N = Recovery is out of criteria
H = Out of holding time

Volatile Organic Compounds by GC/MS

Client: ARCADIS U.S., Inc.
Laboratory ID: LI17017-002
Description: F39TWW13 (35-40)
Matrix: Aqueous
Date Sampled: 09/15/2010 0940
Date Received: 09/17/2010

Run	Prep Method	Analytical Method	Dilution	Analysis Date	Analyst	Prep Date	Batch
1	5030B	8260B	5	09/22/2010 0417	DLB		42856
2	5030B	8260B	5	09/23/2010 0414	DLB		42960

Parameter	CAS Number	Analytical Method	Result	Q	PQL	MDL	Units	Run
Acetone	67-64-1	8260B	ND		50	0.31	ug/L	1
Benzene	71-43-2	8260B	ND		2.5	0.14	ug/L	1
Bromodichloromethane	75-27-4	8260B	ND		2.5	0.85	ug/L	1
Bromoform	75-25-2	8260B	ND		2.5	0.051	ug/L	1
Bromomethane (Methyl bromide)	74-83-9	8260B	ND		2.5	1.0	ug/L	1
2-Butanone (MEK)	78-93-3	8260B	ND		50	10	ug/L	1
Carbon disulfide	75-15-0	8260B	ND		2.5	0.49	ug/L	1
Carbon tetrachloride	56-23-5	8260B	ND		2.5	0.43	ug/L	1
Chlorobenzene	108-90-7	8260B	ND		2.5	0.85	ug/L	1
Chloroethane	75-00-3	8260B	ND		2.5	0.85	ug/L	1
Chloroform	67-66-3	8260B	ND		2.5	0.85	ug/L	1
Chloromethane (Methyl chloride)	74-87-3	8260B	ND		2.5	0.87	ug/L	1
Cyclohexane	110-82-7	8260B	ND		2.5	1.5	ug/L	1
1,2-Dibromo-3-chloropropane (DBCP)	96-12-8	8260B	ND		2.5	0.35	ug/L	1
Dibromochloromethane	124-48-1	8260B	ND		2.5	0.85	ug/L	1
1,2-Dibromoethane (EDB)	106-93-4	8260B	ND		2.5	0.31	ug/L	1
1,3-Dichlorobenzene	541-73-1	8260B	ND		2.5	0.85	ug/L	1
1,2-Dichlorobenzene	95-50-1	8260B	ND		2.5	0.85	ug/L	1
1,4-Dichlorobenzene	106-46-7	8260B	ND		2.5	0.85	ug/L	1
Dichlorodifluoromethane	75-71-8	8260B	ND		2.5	0.35	ug/L	2
1,1-Dichloroethane	75-34-3	8260B	ND		2.5	0.27	ug/L	1
1,2-Dichloroethane	107-06-2	8260B	ND		2.5	0.12	ug/L	1
trans-1,2-Dichloroethene	156-60-5	8260B	1.2	J	2.5	0.40	ug/L	1
1,1-Dichloroethene	75-35-4	8260B	3.9		2.5	0.47	ug/L	1
cis-1,2-Dichloroethene	156-59-2	8260B	320		2.5	0.44	ug/L	1
1,2-Dichloropropane	78-87-5	8260B	ND		2.5	0.41	ug/L	1
trans-1,3-Dichloropropene	10061-02-6	8260B	ND		2.5	0.90	ug/L	1
cis-1,3-Dichloropropene	10061-01-5	8260B	ND		2.5	0.45	ug/L	1
Ethylbenzene	100-41-4	8260B	ND		2.5	0.85	ug/L	1
2-Hexanone	591-78-6	8260B	ND		50	1.4	ug/L	1
Isopropylbenzene	98-82-8	8260B	ND		2.5	0.14	ug/L	1
Methyl acetate	79-20-9	8260B	ND		5.0	1.5	ug/L	1
Methyl tertiary butyl ether (MTBE)	1634-04-4	8260B	ND		2.5	0.095	ug/L	1
4-Methyl-2-pentanone	108-10-1	8260B	ND		50	1.6	ug/L	1
Methylcyclohexane	108-87-2	8260B	ND		25	4.8	ug/L	1
Methylene chloride	75-09-2	8260B	ND		2.5	0.85	ug/L	1
Styrene	100-42-5	8260B	ND		2.5	0.075	ug/L	1
1,1,2,2-Tetrachloroethane	79-34-5	8260B	ND		2.5	0.065	ug/L	1
Tetrachloroethene	127-18-4	8260B	210		2.5	0.072	ug/L	1
Toluene	108-88-3	8260B	1.2	J	2.5	0.85	ug/L	1
1,1,2-Trichloro-1,2,2-Trifluoroethane	76-13-1	8260B	ND		2.5	1.5	ug/L	1
1,2,4-Trichlorobenzene	120-82-1	8260B	ND		2.5	0.85	ug/L	1
1,1,1-Trichloroethane	71-55-6	8260B	ND		2.5	0.14	ug/L	1

PQL = Practical quantitation limit
B = Detected in the method blank
E = Quantitation of compound exceeded the calibration range
ND = Not detected at or above the MDL
J = Estimated result < PQL and ≥ MDL
P = The RPD between two GC columns exceeds 40%
Where applicable, all soil sample analysis are reported on a dry weight basis unless flagged with a "W"
N = Recovery is out of criteria
H = Out of holding time

Volatile Organic Compounds by GC/MS

Client: ARCADIS U.S., Inc.
Laboratory ID: LI17017-002
Description: F39TWW13 (35-40)
Matrix: Aqueous
Date Sampled: 09/15/2010 0940
Date Received: 09/17/2010

Run	Prep Method	Analytical Method	Dilution	Analysis Date	Analyst	Prep Date	Batch
1	5030B	8260B	5	09/22/2010 0417	DLB		42856
2	5030B	8260B	5	09/23/2010 0414	DLB		42960

Parameter	CAS Number	Analytical Method	Result	Q	PQL	MDL	Units	Run
1,1,2-Trichloroethane	79-00-5	8260B	ND		2.5	0.16	ug/L	1
Trichloroethene	79-01-6	8260B	1200		2.5	0.12	ug/L	1
Trichlorofluoromethane	75-69-4	8260B	ND		2.5	0.25	ug/L	1
Vinyl chloride	75-01-4	8260B	ND		2.5	0.33	ug/L	1
Xylenes (total)	1330-20-7	8260B	ND		2.5	0.85	ug/L	1

Surrogate	Q	Run 1 % Recovery	Acceptance Limits	Q	Run 2 % Recovery	Acceptance Limits
1,2-Dichloroethane-d4		95	70-130		91	70-130
Bromofluorobenzene		94	70-130		90	70-130
Toluene-d8		106	70-130		92	70-130

PQL = Practical quantitation limit
B = Detected in the method blank
E = Quantitation of compound exceeded the calibration range
ND = Not detected at or above the MDL
J = Estimated result < PQL and ≥ MDL
P = The RPD between two GC columns exceeds 40%
Where applicable, all soil sample analysis are reported on a dry weight basis unless flagged with a "W"
N = Recovery is out of criteria
H = Out of holding time

Volatile Organic Compounds by GC/MS

Client: ARCADIS U.S., Inc.
Laboratory ID: LI17017-003
Description: F39TWW13 (40-45)
Matrix: Aqueous
Date Sampled: 09/15/2010 1030
Date Received: 09/17/2010

Run	Prep Method	Analytical Method	Dilution	Analysis Date	Analyst	Prep Date	Batch
1	5030B	8260B	1	09/22/2010 0127	DLB		42856
2	5030B	8260B	1	09/23/2010 0231	DLB		42960

Parameter	CAS Number	Analytical Method	Result	Q	PQL	MDL	Units	Run
Acetone	67-64-1	8260B	10		10	0.061	ug/L	1
Benzene	71-43-2	8260B	0.53		0.50	0.027	ug/L	1
Bromodichloromethane	75-27-4	8260B	ND		0.50	0.17	ug/L	1
Bromoform	75-25-2	8260B	ND		0.50	0.010	ug/L	1
Bromomethane (Methyl bromide)	74-83-9	8260B	ND		0.50	0.20	ug/L	1
2-Butanone (MEK)	78-93-3	8260B	ND		10	2.0	ug/L	1
Carbon disulfide	75-15-0	8260B	ND		0.50	0.097	ug/L	1
Carbon tetrachloride	56-23-5	8260B	ND		0.50	0.085	ug/L	1
Chlorobenzene	108-90-7	8260B	ND		0.50	0.17	ug/L	1
Chloroethane	75-00-3	8260B	ND		0.50	0.17	ug/L	1
Chloroform	67-66-3	8260B	ND		0.50	0.17	ug/L	1
Chloromethane (Methyl chloride)	74-87-3	8260B	ND		0.50	0.17	ug/L	1
Cyclohexane	110-82-7	8260B	ND		0.50	0.30	ug/L	1
1,2-Dibromo-3-chloropropane (DBCP)	96-12-8	8260B	ND		0.50	0.069	ug/L	1
Dibromochloromethane	124-48-1	8260B	ND		0.50	0.17	ug/L	1
1,2-Dibromoethane (EDB)	106-93-4	8260B	ND		0.50	0.061	ug/L	1
1,3-Dichlorobenzene	541-73-1	8260B	ND		0.50	0.17	ug/L	1
1,2-Dichlorobenzene	95-50-1	8260B	ND		0.50	0.17	ug/L	1
1,4-Dichlorobenzene	106-46-7	8260B	ND		0.50	0.17	ug/L	1
Dichlorodifluoromethane	75-71-8	8260B	ND		0.50	0.071	ug/L	2
1,1-Dichloroethane	75-34-3	8260B	ND		0.50	0.054	ug/L	1
1,2-Dichloroethane	107-06-2	8260B	ND		0.50	0.023	ug/L	1
trans-1,2-Dichloroethene	156-60-5	8260B	ND		0.50	0.079	ug/L	1
1,1-Dichloroethene	75-35-4	8260B	ND		0.50	0.094	ug/L	1
cis-1,2-Dichloroethene	156-59-2	8260B	76		0.50	0.087	ug/L	1
1,2-Dichloropropane	78-87-5	8260B	ND		0.50	0.081	ug/L	1
trans-1,3-Dichloropropene	10061-02-6	8260B	ND		0.50	0.18	ug/L	1
cis-1,3-Dichloropropene	10061-01-5	8260B	ND		0.50	0.090	ug/L	1
Ethylbenzene	100-41-4	8260B	ND		0.50	0.17	ug/L	1
2-Hexanone	591-78-6	8260B	ND		10	0.27	ug/L	1
Isopropylbenzene	98-82-8	8260B	ND		0.50	0.029	ug/L	1
Methyl acetate	79-20-9	8260B	ND		1.0	0.30	ug/L	1
Methyl tertiary butyl ether (MTBE)	1634-04-4	8260B	ND		0.50	0.019	ug/L	1
4-Methyl-2-pentanone	108-10-1	8260B	ND		10	0.31	ug/L	1
Methylcyclohexane	108-87-2	8260B	ND		5.0	0.95	ug/L	1
Methylene chloride	75-09-2	8260B	ND		0.50	0.17	ug/L	1
Styrene	100-42-5	8260B	ND		0.50	0.015	ug/L	1
1,1,2,2-Tetrachloroethane	79-34-5	8260B	ND		0.50	0.013	ug/L	1
Tetrachloroethene	127-18-4	8260B	1.5		0.50	0.014	ug/L	1
Toluene	108-88-3	8260B	0.61		0.50	0.17	ug/L	1
1,1,2-Trichloro-1,2,2-Trifluoroethane	76-13-1	8260B	ND		0.50	0.30	ug/L	1
1,2,4-Trichlorobenzene	120-82-1	8260B	ND		0.50	0.17	ug/L	1
1,1,1-Trichloroethane	71-55-6	8260B	ND		0.50	0.029	ug/L	1

PQL = Practical quantitation limit
B = Detected in the method blank
E = Quantitation of compound exceeded the calibration range
ND = Not detected at or above the MDL
J = Estimated result < PQL and ≥ MDL
P = The RPD between two GC columns exceeds 40%
Where applicable, all soil sample analysis are reported on a dry weight basis unless flagged with a "W"
N = Recovery is out of criteria
H = Out of holding time

Volatile Organic Compounds by GC/MS

Client: ARCADIS U.S., Inc.
Laboratory ID: LI17017-003
Description: F39TWW13 (40-45)
Matrix: Aqueous
Date Sampled: 09/15/2010 1030
Date Received: 09/17/2010

Run	Prep Method	Analytical Method	Dilution	Analysis Date	Analyst	Prep Date	Batch
1	5030B	8260B	1	09/22/2010 0127	DLB		42856
2	5030B	8260B	1	09/23/2010 0231	DLB		42960

Parameter	CAS Number	Analytical Method	Result	Q	PQL	MDL	Units	Run
1,1,2-Trichloroethane	79-00-5	8260B	ND		0.50	0.031	ug/L	1
Trichloroethene	79-01-6	8260B	74		0.50	0.024	ug/L	1
Trichlorofluoromethane	75-69-4	8260B	ND		0.50	0.051	ug/L	1
Vinyl chloride	75-01-4	8260B	ND		0.50	0.065	ug/L	1
Xylenes (total)	1330-20-7	8260B	ND		0.50	0.17	ug/L	1

Surrogate	Q	Run 1 % Recovery	Acceptance Limits	Q	Run 2 % Recovery	Acceptance Limits
1,2-Dichloroethane-d4		95	70-130		91	70-130
Bromofluorobenzene		96	70-130		90	70-130
Toluene-d8		104	70-130		91	70-130

PQL = Practical quantitation limit
B = Detected in the method blank
E = Quantitation of compound exceeded the calibration range
ND = Not detected at or above the MDL
J = Estimated result < PQL and ≥ MDL
P = The RPD between two GC columns exceeds 40%
Where applicable, all soil sample analysis are reported on a dry weight basis unless flagged with a "W"
N = Recovery is out of criteria
H = Out of holding time

Volatile Organic Compounds by GC/MS

Client: ARCADIS U.S., Inc.
Laboratory ID: LI17017-004
Description: F39TWW13 -DUP
Matrix: Aqueous
Date Sampled: 09/15/2010
Date Received: 09/17/2010

Run	Prep Method	Analytical Method	Dilution	Analysis Date	Analyst	Prep Date	Batch
1	5030B	8260B	1	09/22/2010 0148	DLB		42856
2	5030B	8260B	1	09/23/2010 0251	DLB		42960

Parameter	CAS Number	Analytical Method	Result	Q	PQL	MDL	Units	Run
Acetone	67-64-1	8260B	ND		10	0.061	ug/L	1
Benzene	71-43-2	8260B	0.45	J	0.50	0.027	ug/L	1
Bromodichloromethane	75-27-4	8260B	ND		0.50	0.17	ug/L	1
Bromoform	75-25-2	8260B	ND		0.50	0.010	ug/L	1
Bromomethane (Methyl bromide)	74-83-9	8260B	ND		0.50	0.20	ug/L	1
2-Butanone (MEK)	78-93-3	8260B	ND		10	2.0	ug/L	1
Carbon disulfide	75-15-0	8260B	ND		0.50	0.097	ug/L	1
Carbon tetrachloride	56-23-5	8260B	ND		0.50	0.085	ug/L	1
Chlorobenzene	108-90-7	8260B	ND		0.50	0.17	ug/L	1
Chloroethane	75-00-3	8260B	ND		0.50	0.17	ug/L	1
Chloroform	67-66-3	8260B	ND		0.50	0.17	ug/L	1
Chloromethane (Methyl chloride)	74-87-3	8260B	ND		0.50	0.17	ug/L	1
Cyclohexane	110-82-7	8260B	ND		0.50	0.30	ug/L	1
1,2-Dibromo-3-chloropropane (DBCP)	96-12-8	8260B	ND		0.50	0.069	ug/L	1
Dibromochloromethane	124-48-1	8260B	ND		0.50	0.17	ug/L	1
1,2-Dibromoethane (EDB)	106-93-4	8260B	ND		0.50	0.061	ug/L	1
1,3-Dichlorobenzene	541-73-1	8260B	ND		0.50	0.17	ug/L	1
1,2-Dichlorobenzene	95-50-1	8260B	ND		0.50	0.17	ug/L	1
1,4-Dichlorobenzene	106-46-7	8260B	ND		0.50	0.17	ug/L	1
Dichlorodifluoromethane	75-71-8	8260B	ND		0.50	0.071	ug/L	2
1,1-Dichloroethane	75-34-3	8260B	ND		0.50	0.054	ug/L	1
1,2-Dichloroethane	107-06-2	8260B	ND		0.50	0.023	ug/L	1
trans-1,2-Dichloroethene	156-60-5	8260B	ND		0.50	0.079	ug/L	1
1,1-Dichloroethene	75-35-4	8260B	0.89		0.50	0.094	ug/L	1
cis-1,2-Dichloroethene	156-59-2	8260B	80		0.50	0.087	ug/L	1
1,2-Dichloropropane	78-87-5	8260B	ND		0.50	0.081	ug/L	1
trans-1,3-Dichloropropene	10061-02-6	8260B	ND		0.50	0.18	ug/L	1
cis-1,3-Dichloropropene	10061-01-5	8260B	ND		0.50	0.090	ug/L	1
Ethylbenzene	100-41-4	8260B	ND		0.50	0.17	ug/L	1
2-Hexanone	591-78-6	8260B	ND		10	0.27	ug/L	1
Isopropylbenzene	98-82-8	8260B	ND		0.50	0.029	ug/L	1
Methyl acetate	79-20-9	8260B	ND		1.0	0.30	ug/L	1
Methyl tertiary butyl ether (MTBE)	1634-04-4	8260B	ND		0.50	0.019	ug/L	1
4-Methyl-2-pentanone	108-10-1	8260B	ND		10	0.31	ug/L	1
Methylcyclohexane	108-87-2	8260B	ND		5.0	0.95	ug/L	1
Methylene chloride	75-09-2	8260B	ND		0.50	0.17	ug/L	1
Styrene	100-42-5	8260B	ND		0.50	0.015	ug/L	1
1,1,2,2-Tetrachloroethane	79-34-5	8260B	ND		0.50	0.013	ug/L	1
Tetrachloroethene	127-18-4	8260B	1.8		0.50	0.014	ug/L	1
Toluene	108-88-3	8260B	0.55		0.50	0.17	ug/L	1
1,1,2-Trichloro-1,2,2-Trifluoroethane	76-13-1	8260B	ND		0.50	0.30	ug/L	1
1,2,4-Trichlorobenzene	120-82-1	8260B	ND		0.50	0.17	ug/L	1
1,1,1-Trichloroethane	71-55-6	8260B	ND		0.50	0.029	ug/L	1

PQL = Practical quantitation limit
B = Detected in the method blank
E = Quantitation of compound exceeded the calibration range
ND = Not detected at or above the MDL
J = Estimated result < PQL and ≥ MDL
P = The RPD between two GC columns exceeds 40%
Where applicable, all soil sample analysis are reported on a dry weight basis unless flagged with a "W"
N = Recovery is out of criteria
H = Out of holding time

Volatile Organic Compounds by GC/MS

Client: ARCADIS U.S., Inc.
Laboratory ID: LI17017-004
Description: F39TWW13 -DUP
Matrix: Aqueous
Date Sampled: 09/15/2010
Date Received: 09/17/2010

Run	Prep Method	Analytical Method	Dilution	Analysis Date	Analyst	Prep Date	Batch
1	5030B	8260B	1	09/22/2010 0148	DLB		42856
2	5030B	8260B	1	09/23/2010 0251	DLB		42960

Parameter	CAS Number	Analytical Method	Result	Q	PQL	MDL	Units	Run
1,1,2-Trichloroethane	79-00-5	8260B	ND		0.50	0.031	ug/L	1
Trichloroethene	79-01-6	8260B	87		0.50	0.024	ug/L	1
Trichlorofluoromethane	75-69-4	8260B	ND		0.50	0.051	ug/L	1
Vinyl chloride	75-01-4	8260B	ND		0.50	0.065	ug/L	1
Xylenes (total)	1330-20-7	8260B	ND		0.50	0.17	ug/L	1

Surrogate	Q	Run 1 % Recovery	Acceptance Limits	Q	Run 2 % Recovery	Acceptance Limits
1,2-Dichloroethane-d4		94	70-130		91	70-130
Bromofluorobenzene		94	70-130		91	70-130
Toluene-d8		101	70-130		91	70-130

PQL = Practical quantitation limit
B = Detected in the method blank
E = Quantitation of compound exceeded the calibration range
ND = Not detected at or above the MDL
J = Estimated result < PQL and ≥ MDL
P = The RPD between two GC columns exceeds 40%
Where applicable, all soil sample analysis are reported on a dry weight basis unless flagged with a "W"
N = Recovery is out of criteria
H = Out of holding time

Volatile Organic Compounds by GC/MS

Client: ARCADIS U.S., Inc.
Laboratory ID: LI17017-005
Description: F39TWW13 (45-50)
Matrix: Aqueous
Date Sampled: 09/15/2010 1100
Date Received: 09/17/2010

Run	Prep Method	Analytical Method	Dilution	Analysis Date	Analyst	Prep Date	Batch
1	5030B	8260B	1	09/22/2010 0209	DLB		42856
2	5030B	8260B	1	09/23/2010 0312	DLB		42960

Parameter	CAS Number	Analytical Method	Result	Q	PQL	MDL	Units	Run
Acetone	67-64-1	8260B	22		10	0.061	ug/L	1
Benzene	71-43-2	8260B	0.42	J	0.50	0.027	ug/L	1
Bromodichloromethane	75-27-4	8260B	ND		0.50	0.17	ug/L	1
Bromoform	75-25-2	8260B	ND		0.50	0.010	ug/L	1
Bromomethane (Methyl bromide)	74-83-9	8260B	ND		0.50	0.20	ug/L	1
2-Butanone (MEK)	78-93-3	8260B	ND		10	2.0	ug/L	1
Carbon disulfide	75-15-0	8260B	ND		0.50	0.097	ug/L	1
Carbon tetrachloride	56-23-5	8260B	ND		0.50	0.085	ug/L	1
Chlorobenzene	108-90-7	8260B	ND		0.50	0.17	ug/L	1
Chloroethane	75-00-3	8260B	ND		0.50	0.17	ug/L	1
Chloroform	67-66-3	8260B	ND		0.50	0.17	ug/L	1
Chloromethane (Methyl chloride)	74-87-3	8260B	ND		0.50	0.17	ug/L	1
Cyclohexane	110-82-7	8260B	ND		0.50	0.30	ug/L	1
1,2-Dibromo-3-chloropropane (DBCP)	96-12-8	8260B	ND		0.50	0.069	ug/L	1
Dibromochloromethane	124-48-1	8260B	ND		0.50	0.17	ug/L	1
1,2-Dibromoethane (EDB)	106-93-4	8260B	ND		0.50	0.061	ug/L	1
1,3-Dichlorobenzene	541-73-1	8260B	ND		0.50	0.17	ug/L	1
1,2-Dichlorobenzene	95-50-1	8260B	ND		0.50	0.17	ug/L	1
1,4-Dichlorobenzene	106-46-7	8260B	ND		0.50	0.17	ug/L	1
Dichlorodifluoromethane	75-71-8	8260B	ND		0.50	0.071	ug/L	2
1,1-Dichloroethane	75-34-3	8260B	ND		0.50	0.054	ug/L	1
1,2-Dichloroethane	107-06-2	8260B	ND		0.50	0.023	ug/L	1
trans-1,2-Dichloroethene	156-60-5	8260B	ND		0.50	0.079	ug/L	1
1,1-Dichloroethene	75-35-4	8260B	ND		0.50	0.094	ug/L	1
cis-1,2-Dichloroethene	156-59-2	8260B	0.94		0.50	0.087	ug/L	1
1,2-Dichloropropane	78-87-5	8260B	ND		0.50	0.081	ug/L	1
trans-1,3-Dichloropropene	10061-02-6	8260B	ND		0.50	0.18	ug/L	1
cis-1,3-Dichloropropene	10061-01-5	8260B	ND		0.50	0.090	ug/L	1
Ethylbenzene	100-41-4	8260B	ND		0.50	0.17	ug/L	1
2-Hexanone	591-78-6	8260B	ND		10	0.27	ug/L	1
Isopropylbenzene	98-82-8	8260B	ND		0.50	0.029	ug/L	1
Methyl acetate	79-20-9	8260B	ND		1.0	0.30	ug/L	1
Methyl tertiary butyl ether (MTBE)	1634-04-4	8260B	ND		0.50	0.019	ug/L	1
4-Methyl-2-pentanone	108-10-1	8260B	ND		10	0.31	ug/L	1
Methylcyclohexane	108-87-2	8260B	ND		5.0	0.95	ug/L	1
Methylene chloride	75-09-2	8260B	ND		0.50	0.17	ug/L	1
Styrene	100-42-5	8260B	ND		0.50	0.015	ug/L	1
1,1,2,2-Tetrachloroethane	79-34-5	8260B	ND		0.50	0.013	ug/L	1
Tetrachloroethene	127-18-4	8260B	ND		0.50	0.014	ug/L	1
Toluene	108-88-3	8260B	0.53		0.50	0.17	ug/L	1
1,1,2-Trichloro-1,2,2-Trifluoroethane	76-13-1	8260B	ND		0.50	0.30	ug/L	1
1,2,4-Trichlorobenzene	120-82-1	8260B	ND		0.50	0.17	ug/L	1
1,1,1-Trichloroethane	71-55-6	8260B	ND		0.50	0.029	ug/L	1

PQL = Practical quantitation limit
B = Detected in the method blank
E = Quantitation of compound exceeded the calibration range
ND = Not detected at or above the MDL
J = Estimated result < PQL and ≥ MDL
P = The RPD between two GC columns exceeds 40%
Where applicable, all soil sample analysis are reported on a dry weight basis unless flagged with a "W"
N = Recovery is out of criteria
H = Out of holding time

Volatile Organic Compounds by GC/MS

Client: ARCADIS U.S., Inc.
Laboratory ID: LI17017-005
Description: F39TWW13 (45-50)
Matrix: Aqueous
Date Sampled: 09/15/2010 1100
Date Received: 09/17/2010

Run	Prep Method	Analytical Method	Dilution	Analysis Date	Analyst	Prep Date	Batch
1	5030B	8260B	1	09/22/2010 0209	DLB		42856
2	5030B	8260B	1	09/23/2010 0312	DLB		42960

Parameter	CAS Number	Analytical Method	Result	Q	PQL	MDL	Units	Run
1,1,2-Trichloroethane	79-00-5	8260B	ND		0.50	0.031	ug/L	1
Trichloroethene	79-01-6	8260B	1.3		0.50	0.024	ug/L	1
Trichlorofluoromethane	75-69-4	8260B	ND		0.50	0.051	ug/L	1
Vinyl chloride	75-01-4	8260B	ND		0.50	0.065	ug/L	1
Xylenes (total)	1330-20-7	8260B	ND		0.50	0.17	ug/L	1

Surrogate	Q	Run 1 % Recovery	Acceptance Limits	Q	Run 2 % Recovery	Acceptance Limits
1,2-Dichloroethane-d4		95	70-130		91	70-130
Bromofluorobenzene		94	70-130		92	70-130
Toluene-d8		102	70-130		91	70-130

PQL = Practical quantitation limit
B = Detected in the method blank
E = Quantitation of compound exceeded the calibration range
ND = Not detected at or above the MDL
J = Estimated result < PQL and ≥ MDL
P = The RPD between two GC columns exceeds 40%
Where applicable, all soil sample analysis are reported on a dry weight basis unless flagged with a "W"
N = Recovery is out of criteria
H = Out of holding time

Volatile Organic Compounds by GC/MS

Client: ARCADIS U.S., Inc.
Laboratory ID: LI17017-006
Description: F39TWW13 (50-55)
Matrix: Aqueous
Date Sampled: 09/15/2010 1200
Date Received: 09/17/2010

Run	Prep Method	Analytical Method	Dilution	Analysis Date	Analyst	Prep Date	Batch
1	5030B	8260B	1	09/22/2010 0231	DLB		42856
2	5030B	8260B	1	09/23/2010 0332	DLB		42960

Parameter	CAS Number	Analytical Method	Result	Q	PQL	MDL	Units	Run
Acetone	67-64-1	8260B	ND		10	0.061	ug/L	1
Benzene	71-43-2	8260B	0.35	J	0.50	0.027	ug/L	1
Bromodichloromethane	75-27-4	8260B	ND		0.50	0.17	ug/L	1
Bromoform	75-25-2	8260B	ND		0.50	0.010	ug/L	1
Bromomethane (Methyl bromide)	74-83-9	8260B	ND		0.50	0.20	ug/L	1
2-Butanone (MEK)	78-93-3	8260B	ND		10	2.0	ug/L	1
Carbon disulfide	75-15-0	8260B	ND		0.50	0.097	ug/L	1
Carbon tetrachloride	56-23-5	8260B	ND		0.50	0.085	ug/L	1
Chlorobenzene	108-90-7	8260B	ND		0.50	0.17	ug/L	1
Chloroethane	75-00-3	8260B	ND		0.50	0.17	ug/L	1
Chloroform	67-66-3	8260B	ND		0.50	0.17	ug/L	1
Chloromethane (Methyl chloride)	74-87-3	8260B	0.77		0.50	0.17	ug/L	1
Cyclohexane	110-82-7	8260B	ND		0.50	0.30	ug/L	1
1,2-Dibromo-3-chloropropane (DBCP)	96-12-8	8260B	ND		0.50	0.069	ug/L	1
Dibromochloromethane	124-48-1	8260B	ND		0.50	0.17	ug/L	1
1,2-Dibromoethane (EDB)	106-93-4	8260B	ND		0.50	0.061	ug/L	1
1,3-Dichlorobenzene	541-73-1	8260B	ND		0.50	0.17	ug/L	1
1,2-Dichlorobenzene	95-50-1	8260B	ND		0.50	0.17	ug/L	1
1,4-Dichlorobenzene	106-46-7	8260B	ND		0.50	0.17	ug/L	1
Dichlorodifluoromethane	75-71-8	8260B	ND		0.50	0.071	ug/L	2
1,1-Dichloroethane	75-34-3	8260B	ND		0.50	0.054	ug/L	1
1,2-Dichloroethane	107-06-2	8260B	ND		0.50	0.023	ug/L	1
trans-1,2-Dichloroethene	156-60-5	8260B	ND		0.50	0.079	ug/L	1
1,1-Dichloroethene	75-35-4	8260B	ND		0.50	0.094	ug/L	1
cis-1,2-Dichloroethene	156-59-2	8260B	0.29	J	0.50	0.087	ug/L	1
1,2-Dichloropropane	78-87-5	8260B	ND		0.50	0.081	ug/L	1
trans-1,3-Dichloropropene	10061-02-6	8260B	ND		0.50	0.18	ug/L	1
cis-1,3-Dichloropropene	10061-01-5	8260B	ND		0.50	0.090	ug/L	1
Ethylbenzene	100-41-4	8260B	ND		0.50	0.17	ug/L	1
2-Hexanone	591-78-6	8260B	ND		10	0.27	ug/L	1
Isopropylbenzene	98-82-8	8260B	ND		0.50	0.029	ug/L	1
Methyl acetate	79-20-9	8260B	ND		1.0	0.30	ug/L	1
Methyl tertiary butyl ether (MTBE)	1634-04-4	8260B	ND		0.50	0.019	ug/L	1
4-Methyl-2-pentanone	108-10-1	8260B	ND		10	0.31	ug/L	1
Methylcyclohexane	108-87-2	8260B	ND		5.0	0.95	ug/L	1
Methylene chloride	75-09-2	8260B	ND		0.50	0.17	ug/L	1
Styrene	100-42-5	8260B	ND		0.50	0.015	ug/L	1
1,1,2,2-Tetrachloroethane	79-34-5	8260B	ND		0.50	0.013	ug/L	1
Tetrachloroethene	127-18-4	8260B	ND		0.50	0.014	ug/L	1
Toluene	108-88-3	8260B	0.43	J	0.50	0.17	ug/L	1
1,1,2-Trichloro-1,2,2-Trifluoroethane	76-13-1	8260B	ND		0.50	0.30	ug/L	1
1,2,4-Trichlorobenzene	120-82-1	8260B	ND		0.50	0.17	ug/L	1
1,1,1-Trichloroethane	71-55-6	8260B	ND		0.50	0.029	ug/L	1

PQL = Practical quantitation limit
B = Detected in the method blank
E = Quantitation of compound exceeded the calibration range
ND = Not detected at or above the MDL
J = Estimated result < PQL and ≥ MDL
P = The RPD between two GC columns exceeds 40%
Where applicable, all soil sample analysis are reported on a dry weight basis unless flagged with a "W"
N = Recovery is out of criteria
H = Out of holding time

Volatile Organic Compounds by GC/MS

Client: ARCADIS U.S., Inc.
Laboratory ID: LI17017-006
Description: F39TWW13 (50-55)
Matrix: Aqueous
Date Sampled: 09/15/2010 1200
Date Received: 09/17/2010

Run	Prep Method	Analytical Method	Dilution	Analysis Date	Analyst	Prep Date	Batch
1	5030B	8260B	1	09/22/2010 0231	DLB		42856
2	5030B	8260B	1	09/23/2010 0332	DLB		42960

Parameter	CAS Number	Analytical Method	Result	Q	PQL	MDL	Units	Run
1,1,2-Trichloroethane	79-00-5	8260B	ND		0.50	0.031	ug/L	1
Trichloroethene	79-01-6	8260B	ND		0.50	0.024	ug/L	1
Trichlorofluoromethane	75-69-4	8260B	ND		0.50	0.051	ug/L	1
Vinyl chloride	75-01-4	8260B	ND		0.50	0.065	ug/L	1
Xylenes (total)	1330-20-7	8260B	ND		0.50	0.17	ug/L	1

Surrogate	Q	Run 1 % Recovery	Acceptance Limits	Q	Run 2 % Recovery	Acceptance Limits
1,2-Dichloroethane-d4		96	70-130		91	70-130
Bromofluorobenzene		95	70-130		92	70-130
Toluene-d8		103	70-130		91	70-130

PQL = Practical quantitation limit
B = Detected in the method blank
E = Quantitation of compound exceeded the calibration range
ND = Not detected at or above the MDL
J = Estimated result < PQL and ≥ MDL
P = The RPD between two GC columns exceeds 40%
Where applicable, all soil sample analysis are reported on a dry weight basis unless flagged with a "W"
N = Recovery is out of criteria
H = Out of holding time

Volatile Organic Compounds by GC/MS

Client: ARCADIS U.S., Inc.
Laboratory ID: LI17017-007
Description: Trip Blank
Matrix: Aqueous
Date Sampled: 09/15/2010 0915
Date Received: 09/17/2010

Run	Prep Method	Analytical Method	Dilution	Analysis Date	Analyst	Prep Date	Batch
1	5030B	8260B	1	09/22/2010 0044	DLB		42856
2	5030B	8260B	1	09/23/2010 0149	DLB		42960

Parameter	CAS Number	Analytical Method	Result	Q	PQL	MDL	Units	Run
Acetone	67-64-1	8260B	1.8	J	10	0.061	ug/L	1
Benzene	71-43-2	8260B	ND		0.50	0.027	ug/L	1
Bromodichloromethane	75-27-4	8260B	ND		0.50	0.17	ug/L	1
Bromoform	75-25-2	8260B	ND		0.50	0.010	ug/L	1
Bromomethane (Methyl bromide)	74-83-9	8260B	ND		0.50	0.20	ug/L	1
2-Butanone (MEK)	78-93-3	8260B	ND		10	2.0	ug/L	1
Carbon disulfide	75-15-0	8260B	ND		0.50	0.097	ug/L	1
Carbon tetrachloride	56-23-5	8260B	ND		0.50	0.085	ug/L	1
Chlorobenzene	108-90-7	8260B	ND		0.50	0.17	ug/L	1
Chloroethane	75-00-3	8260B	ND		0.50	0.17	ug/L	1
Chloroform	67-66-3	8260B	ND		0.50	0.17	ug/L	1
Chloromethane (Methyl chloride)	74-87-3	8260B	ND		0.50	0.17	ug/L	1
Cyclohexane	110-82-7	8260B	ND		0.50	0.30	ug/L	1
1,2-Dibromo-3-chloropropane (DBCP)	96-12-8	8260B	ND		0.50	0.069	ug/L	1
Dibromochloromethane	124-48-1	8260B	ND		0.50	0.17	ug/L	1
1,2-Dibromoethane (EDB)	106-93-4	8260B	ND		0.50	0.061	ug/L	1
1,3-Dichlorobenzene	541-73-1	8260B	ND		0.50	0.17	ug/L	1
1,2-Dichlorobenzene	95-50-1	8260B	ND		0.50	0.17	ug/L	1
1,4-Dichlorobenzene	106-46-7	8260B	ND		0.50	0.17	ug/L	1
Dichlorodifluoromethane	75-71-8	8260B	ND		0.50	0.071	ug/L	2
1,1-Dichloroethane	75-34-3	8260B	ND		0.50	0.054	ug/L	1
1,2-Dichloroethane	107-06-2	8260B	ND		0.50	0.023	ug/L	1
trans-1,2-Dichloroethene	156-60-5	8260B	ND		0.50	0.079	ug/L	1
1,1-Dichloroethene	75-35-4	8260B	ND		0.50	0.094	ug/L	1
cis-1,2-Dichloroethene	156-59-2	8260B	ND		0.50	0.087	ug/L	1
1,2-Dichloropropane	78-87-5	8260B	ND		0.50	0.081	ug/L	1
trans-1,3-Dichloropropene	10061-02-6	8260B	ND		0.50	0.18	ug/L	1
cis-1,3-Dichloropropene	10061-01-5	8260B	ND		0.50	0.090	ug/L	1
Ethylbenzene	100-41-4	8260B	ND		0.50	0.17	ug/L	1
2-Hexanone	591-78-6	8260B	ND		10	0.27	ug/L	1
Isopropylbenzene	98-82-8	8260B	ND		0.50	0.029	ug/L	1
Methyl acetate	79-20-9	8260B	ND		1.0	0.30	ug/L	1
Methyl tertiary butyl ether (MTBE)	1634-04-4	8260B	ND		0.50	0.019	ug/L	1
4-Methyl-2-pentanone	108-10-1	8260B	ND		10	0.31	ug/L	1
Methylcyclohexane	108-87-2	8260B	ND		5.0	0.95	ug/L	1
Methylene chloride	75-09-2	8260B	ND		0.50	0.17	ug/L	1
Styrene	100-42-5	8260B	ND		0.50	0.015	ug/L	1
1,1,2,2-Tetrachloroethane	79-34-5	8260B	ND		0.50	0.013	ug/L	1
Tetrachloroethene	127-18-4	8260B	ND		0.50	0.014	ug/L	1
Toluene	108-88-3	8260B	ND		0.50	0.17	ug/L	1
1,1,2-Trichloro-1,2,2-Trifluoroethane	76-13-1	8260B	ND		0.50	0.30	ug/L	1
1,2,4-Trichlorobenzene	120-82-1	8260B	ND		0.50	0.17	ug/L	1
1,1,1-Trichloroethane	71-55-6	8260B	ND		0.50	0.029	ug/L	1

PQL = Practical quantitation limit
B = Detected in the method blank
E = Quantitation of compound exceeded the calibration range
ND = Not detected at or above the MDL
J = Estimated result < PQL and ≥ MDL
P = The RPD between two GC columns exceeds 40%
Where applicable, all soil sample analysis are reported on a dry weight basis unless flagged with a "W"
N = Recovery is out of criteria
H = Out of holding time

Volatile Organic Compounds by GC/MS

Client: ARCADIS U.S., Inc.
Laboratory ID: LI17017-007
Description: Trip Blank
Matrix: Aqueous
Date Sampled: 09/15/2010 0915
Date Received: 09/17/2010

Run	Prep Method	Analytical Method	Dilution	Analysis Date	Analyst	Prep Date	Batch
1	5030B	8260B	1	09/22/2010 0044	DLB		42856
2	5030B	8260B	1	09/23/2010 0149	DLB		42960

Parameter	CAS Number	Analytical Method	Result	Q	PQL	MDL	Units	Run
1,1,2-Trichloroethane	79-00-5	8260B	ND		0.50	0.031	ug/L	1
Trichloroethene	79-01-6	8260B	ND		0.50	0.024	ug/L	1
Trichlorofluoromethane	75-69-4	8260B	ND		0.50	0.051	ug/L	1
Vinyl chloride	75-01-4	8260B	ND		0.50	0.065	ug/L	1
Xylenes (total)	1330-20-7	8260B	ND		0.50	0.17	ug/L	1

Surrogate	Q	Run 1 % Recovery	Acceptance Limits	Q	Run 2 % Recovery	Acceptance Limits
1,2-Dichloroethane-d4		99	70-130		88	70-130
Bromofluorobenzene		97	70-130		90	70-130
Toluene-d8		105	70-130		88	70-130

PQL = Practical quantitation limit
B = Detected in the method blank
E = Quantitation of compound exceeded the calibration range
ND = Not detected at or above the MDL
J = Estimated result < PQL and ≥ MDL
P = The RPD between two GC columns exceeds 40%
Where applicable, all soil sample analysis are reported on a dry weight basis unless flagged with a "W"
N = Recovery is out of criteria
H = Out of holding time

QC Summary

Volatile Organic Compounds by GC/MS - MB

Sample ID: LQ42856-001
Batch: 42856
Analytical Method: 8260B

Matrix: Aqueous
Prep Method: 5030B

Parameter	Result	Q	Dil	PQL	MDL	Units	Analysis Date
Acetone	ND		1	10	0.061	ug/L	09/21/2010 2340
Benzene	ND		1	0.50	0.027	ug/L	09/21/2010 2340
Bromodichloromethane	ND		1	0.50	0.17	ug/L	09/21/2010 2340
Bromoform	ND		1	0.50	0.010	ug/L	09/21/2010 2340
Bromomethane (Methyl bromide)	ND		1	0.50	0.20	ug/L	09/21/2010 2340
2-Butanone (MEK)	ND		1	10	2.0	ug/L	09/21/2010 2340
Carbon disulfide	ND		1	0.50	0.097	ug/L	09/21/2010 2340
Carbon tetrachloride	ND		1	0.50	0.085	ug/L	09/21/2010 2340
Chlorobenzene	ND		1	0.50	0.17	ug/L	09/21/2010 2340
Chloroethane	ND		1	0.50	0.17	ug/L	09/21/2010 2340
Chloroform	ND		1	0.50	0.17	ug/L	09/21/2010 2340
Chloromethane (Methyl chloride)	ND		1	0.50	0.17	ug/L	09/21/2010 2340
Cyclohexane	ND		1	0.50	0.30	ug/L	09/21/2010 2340
1,2-Dibromo-3-chloropropane (DBCP)	ND		1	0.50	0.069	ug/L	09/21/2010 2340
Dibromochloromethane	ND		1	0.50	0.17	ug/L	09/21/2010 2340
1,2-Dibromoethane (EDB)	ND		1	0.50	0.061	ug/L	09/21/2010 2340
1,3-Dichlorobenzene	ND		1	0.50	0.17	ug/L	09/21/2010 2340
1,2-Dichlorobenzene	ND		1	0.50	0.17	ug/L	09/21/2010 2340
1,4-Dichlorobenzene	ND		1	0.50	0.17	ug/L	09/21/2010 2340
1,2-Dichloroethane	ND		1	0.50	0.023	ug/L	09/21/2010 2340
1,1-Dichloroethane	ND		1	0.50	0.054	ug/L	09/21/2010 2340
1,1-Dichloroethene	ND		1	0.50	0.094	ug/L	09/21/2010 2340
trans-1,2-Dichloroethene	ND		1	0.50	0.079	ug/L	09/21/2010 2340
cis-1,2-Dichloroethene	ND		1	0.50	0.087	ug/L	09/21/2010 2340
1,2-Dichloropropane	ND		1	0.50	0.081	ug/L	09/21/2010 2340
trans-1,3-Dichloropropene	ND		1	0.50	0.18	ug/L	09/21/2010 2340
cis-1,3-Dichloropropene	ND		1	0.50	0.090	ug/L	09/21/2010 2340
Ethylbenzene	ND		1	0.50	0.17	ug/L	09/21/2010 2340
2-Hexanone	ND		1	10	0.27	ug/L	09/21/2010 2340
Isopropylbenzene	ND		1	0.50	0.029	ug/L	09/21/2010 2340
Methyl acetate	ND		1	1.0	0.30	ug/L	09/21/2010 2340
Methyl tertiary butyl ether (MTBE)	ND		1	0.50	0.019	ug/L	09/21/2010 2340
4-Methyl-2-pentanone	ND		1	10	0.31	ug/L	09/21/2010 2340
Methylcyclohexane	ND		1	5.0	0.95	ug/L	09/21/2010 2340
Methylene chloride	ND		1	0.50	0.17	ug/L	09/21/2010 2340
Styrene	ND		1	0.50	0.015	ug/L	09/21/2010 2340
1,1,2,2-Tetrachloroethane	ND		1	0.50	0.013	ug/L	09/21/2010 2340
Tetrachloroethene	ND		1	0.50	0.014	ug/L	09/21/2010 2340
Toluene	ND		1	0.50	0.17	ug/L	09/21/2010 2340
1,1,2-Trichloro-1,2,2-Trifluoroethane	ND		1	0.50	0.30	ug/L	09/21/2010 2340
1,2,4-Trichlorobenzene	ND		1	0.50	0.17	ug/L	09/21/2010 2340
1,1,2-Trichloroethane	ND		1	0.50	0.031	ug/L	09/21/2010 2340
1,1,1-Trichloroethane	ND		1	0.50	0.029	ug/L	09/21/2010 2340
Trichloroethene	ND		1	0.50	0.024	ug/L	09/21/2010 2340

PQL = Practical quantitation limit
ND = Not detected at or above the MDL
P = The RPD between two GC columns exceeds 40%
J = Estimated result < PQL and ≥ MDL
N - Recovery is out of criteria
+ - RPD is out of criteria

Where applicable, all soil sample analysis are reported on a dry weight basis unless flagged with a "W"

Note: Calculations are performed before rounding to avoid round-off errors in calculated results

Volatile Organic Compounds by GC/MS - MB

Sample ID: LQ42856-001
Batch: 42856
Analytical Method: 8260B

Matrix: Aqueous
Prep Method: 5030B

Parameter	Result	Q	Dil	PQL	MDL	Units	Analysis Date
Trichlorofluoromethane	ND		1	0.50	0.051	ug/L	09/21/2010 2340
Vinyl chloride	ND		1	0.50	0.065	ug/L	09/21/2010 2340
Xylenes (total)	ND		1	0.50	0.17	ug/L	09/21/2010 2340

Surrogate	Q	% Rec	Acceptance Limit
Bromofluorobenzene		95	70-130
1,2-Dichloroethane-d4		95	70-130
Toluene-d8		101	70-130

PQL = Practical quantitation limit
ND = Not detected at or above the MDL
P = The RPD between two GC columns exceeds 40%
J = Estimated result < PQL and ≥ MDL
N - Recovery is out of criteria
+ - RPD is out of criteria

Where applicable, all soil sample analysis are reported on a dry weight basis unless flagged with a "W"

Note: Calculations are performed before rounding to avoid round-off errors in calculated results

Volatile Organic Compounds by GC/MS - LCS

Sample ID: LQ42856-002
Batch: 42856
Analytical Method: 8260B

Matrix: Aqueous
Prep Method: 5030B

Parameter	Spike Amount (ug/L)	Result (ug/L)	Q	Dil	% Rec	% Rec Limit	Analysis Date
Acetone	100	91		1	91	46-153	09/21/2010 2212
Benzene	50	45		1	90	70-130	09/21/2010 2212
Bromodichloromethane	50	47		1	94	70-130	09/21/2010 2212
Bromoform	50	40		1	79	70-130	09/21/2010 2212
Bromomethane (Methyl bromide)	50	26	N	1	52	60-140	09/21/2010 2212
2-Butanone (MEK)	100	87		1	87	60-140	09/21/2010 2212
Carbon disulfide	50	49		1	99	60-140	09/21/2010 2212
Carbon tetrachloride	50	48		1	95	70-130	09/21/2010 2212
Chlorobenzene	50	43		1	87	70-130	09/21/2010 2212
Chloroethane	50	36		1	72	42-163	09/21/2010 2212
Chloroform	50	46		1	92	70-130	09/21/2010 2212
Chloromethane (Methyl chloride)	50	23		1	45	20-158	09/21/2010 2212
Cyclohexane	50	41		1	83	70-130	09/21/2010 2212
1,2-Dibromo-3-chloropropane (DBCP)	50	53		1	106	70-130	09/21/2010 2212
Dibromochloromethane	50	47		1	95	70-130	09/21/2010 2212
1,2-Dibromoethane (EDB)	50	43		1	86	70-130	09/21/2010 2212
1,3-Dichlorobenzene	50	47		1	93	70-130	09/21/2010 2212
1,2-Dichlorobenzene	50	44		1	88	70-130	09/21/2010 2212
1,4-Dichlorobenzene	50	46		1	92	70-130	09/21/2010 2212
1,2-Dichloroethane	50	43		1	86	70-130	09/21/2010 2212
1,1-Dichloroethane	50	45		1	91	70-130	09/21/2010 2212
1,1-Dichloroethene	50	44		1	88	70-130	09/21/2010 2212
trans-1,2-Dichloroethene	50	43		1	87	70-130	09/21/2010 2212
cis-1,2-Dichloroethene	50	44		1	87	70-130	09/21/2010 2212
1,2-Dichloropropane	50	41		1	81	70-130	09/21/2010 2212
trans-1,3-Dichloropropene	50	49		1	97	70-130	09/21/2010 2212
cis-1,3-Dichloropropene	50	46		1	92	70-130	09/21/2010 2212
Ethylbenzene	50	47		1	94	70-130	09/21/2010 2212
2-Hexanone	100	87		1	87	60-140	09/21/2010 2212
Isopropylbenzene	50	51		1	102	70-130	09/21/2010 2212
Methyl acetate	50	44		1	88	15-128	09/21/2010 2212
Methyl tertiary butyl ether (MTBE)	50	42		1	85	70-130	09/21/2010 2212
4-Methyl-2-pentanone	100	80		1	80	60-140	09/21/2010 2212
Methylcyclohexane	50	47		1	94	70-130	09/21/2010 2212
Methylene chloride	50	46		1	91	70-130	09/21/2010 2212
Styrene	50	54		1	107	70-130	09/21/2010 2212
1,1,2,2-Tetrachloroethane	50	45		1	91	70-130	09/21/2010 2212
Tetrachloroethene	50	47		1	94	70-130	09/21/2010 2212
Toluene	50	45		1	91	70-130	09/21/2010 2212
1,1,2-Trichloro-1,2,2-Trifluoroethane	50	58		1	115	70-130	09/21/2010 2212
1,2,4-Trichlorobenzene	50	47		1	93	70-130	09/21/2010 2212
1,1,2-Trichloroethane	50	42		1	84	70-130	09/21/2010 2212
1,1,1-Trichloroethane	50	49		1	97	70-130	09/21/2010 2212
Trichloroethene	50	43		1	86	70-130	09/21/2010 2212

PQL = Practical quantitation limit
ND = Not detected at or above the MDL
P = The RPD between two GC columns exceeds 40%
J = Estimated result < PQL and ≥ MDL
N - Recovery is out of criteria
+ - RPD is out of criteria

Where applicable, all soil sample analysis are reported on a dry weight basis unless flagged with a "W"

Note: Calculations are performed before rounding to avoid round-off errors in calculated results

Volatile Organic Compounds by GC/MS - LCS

Sample ID: LQ42856-002
Batch: 42856
Analytical Method: 8260B

Matrix: Aqueous
Prep Method: 5030B

Parameter	Spike Amount (ug/L)	Result (ug/L)	Q	Dil	% Rec	% Rec Limit	Analysis Date
Trichlorofluoromethane	50	42		1	84	60-140	09/21/2010 2212
Vinyl chloride	50	31		1	61	60-140	09/21/2010 2212
Xylenes (total)	100	96		1	96	70-130	09/21/2010 2212

Surrogate	Q	% Rec	Acceptance Limit
Bromofluorobenzene		104	70-130
1,2-Dichloroethane-d4		88	70-130
Toluene-d8		102	70-130

PQL = Practical quantitation limit
ND = Not detected at or above the MDL
P = The RPD between two GC columns exceeds 40%
J = Estimated result < PQL and ≥ MDL
N - Recovery is out of criteria
+ - RPD is out of criteria

Where applicable, all soil sample analysis are reported on a dry weight basis unless flagged with a "W"

Note: Calculations are performed before rounding to avoid round-off errors in calculated results

Volatile Organic Compounds by GC/MS - LCSD

Sample ID: LQ42856-003
Batch: 42856
Analytical Method: 8260B

Matrix: Aqueous
Prep Method: 5030B

Parameter	Spike Amount (ug/L)	Result (ug/L)	Q	Dil	% Rec	% RPD	% Rec Limit	% RPD Limit	Analysis Date
Acetone	100	86		1	86	5.5	46-153	20	09/21/2010 2233
Benzene	50	44		1	87	3.2	70-130	20	09/21/2010 2233
Bromodichloromethane	50	47		1	93	0.88	70-130	20	09/21/2010 2233
Bromoform	50	39		1	77	2.8	70-130	20	09/21/2010 2233
Bromomethane (Methyl bromide)	50	25	N	1	50	2.8	60-140	20	09/21/2010 2233
2-Butanone (MEK)	100	82		1	82	5.4	60-140	20	09/21/2010 2233
Carbon disulfide	50	47		1	93	5.6	60-140	20	09/21/2010 2233
Carbon tetrachloride	50	46		1	93	2.9	70-130	20	09/21/2010 2233
Chlorobenzene	50	42		1	83	3.8	70-130	20	09/21/2010 2233
Chloroethane	50	34		1	69	4.9	42-163	20	09/21/2010 2233
Chloroform	50	45		1	89	2.8	70-130	20	09/21/2010 2233
Chloromethane (Methyl chloride)	50	21		1	41	9.0	20-158	20	09/21/2010 2233
Cyclohexane	50	43		1	85	3.2	70-130	20	09/21/2010 2233
1,2-Dibromo-3-chloropropane (DBCP)	50	49		1	98	7.5	70-130	20	09/21/2010 2233
Dibromochloromethane	50	47		1	93	1.8	70-130	20	09/21/2010 2233
1,2-Dibromoethane (EDB)	50	42		1	84	1.3	70-130	20	09/21/2010 2233
1,3-Dichlorobenzene	50	45		1	91	2.4	70-130	20	09/21/2010 2233
1,2-Dichlorobenzene	50	43		1	86	1.8	70-130	20	09/21/2010 2233
1,4-Dichlorobenzene	50	45		1	91	1.8	70-130	20	09/21/2010 2233
1,2-Dichloroethane	50	42		1	83	3.1	70-130	20	09/21/2010 2233
1,1-Dichloroethane	50	44		1	88	3.7	70-130	20	09/21/2010 2233
1,1-Dichloroethene	50	42		1	83	5.4	70-130	20	09/21/2010 2233
trans-1,2-Dichloroethene	50	42		1	84	2.9	70-130	20	09/21/2010 2233
cis-1,2-Dichloroethene	50	42		1	84	3.3	70-130	20	09/21/2010 2233
1,2-Dichloropropane	50	40		1	81	0.51	70-130	20	09/21/2010 2233
trans-1,3-Dichloropropene	50	48		1	95	1.9	70-130	20	09/21/2010 2233
cis-1,3-Dichloropropene	50	46		1	91	0.41	70-130	20	09/21/2010 2233
Ethylbenzene	50	46		1	93	1.7	70-130	20	09/21/2010 2233
2-Hexanone	100	83		1	83	5.6	60-140	20	09/21/2010 2233
Isopropylbenzene	50	49		1	98	4.2	70-130	20	09/21/2010 2233
Methyl acetate	50	41		1	83	5.8	15-128	20	09/21/2010 2233
Methyl tertiary butyl ether (MTBE)	50	41		1	83	2.5	70-130	20	09/21/2010 2233
4-Methyl-2-pentanone	100	77		1	77	4.1	60-140	20	09/21/2010 2233
Methylcyclohexane	50	45		1	91	2.9	70-130	20	09/21/2010 2233
Methylene chloride	50	44		1	88	4.1	70-130	20	09/21/2010 2233
Styrene	50	52		1	104	3.3	70-130	20	09/21/2010 2233
1,1,2,2-Tetrachloroethane	50	44		1	88	3.7	70-130	20	09/21/2010 2233
Tetrachloroethene	50	46		1	91	2.8	70-130	20	09/21/2010 2233
Toluene	50	45		1	90	1.5	70-130	20	09/21/2010 2233
1,1,2-Trichloro-1,2,2-Trifluoroethane	50	54		1	108	6.0	70-130	20	09/21/2010 2233
1,2,4-Trichlorobenzene	50	45		1	89	4.4	70-130	20	09/21/2010 2233
1,1,2-Trichloroethane	50	42		1	84	0.25	70-130	20	09/21/2010 2233
1,1,1-Trichloroethane	50	47		1	94	2.9	70-130	20	09/21/2010 2233
Trichloroethene	50	42		1	84	2.5	70-130	20	09/21/2010 2233

PQL = Practical quantitation limit
ND = Not detected at or above the MDL
P = The RPD between two GC columns exceeds 40%
J = Estimated result < PQL and ≥ MDL
N - Recovery is out of criteria
+ - RPD is out of criteria

Where applicable, all soil sample analysis are reported on a dry weight basis unless flagged with a "W"

Note: Calculations are performed before rounding to avoid round-off errors in calculated results

Volatile Organic Compounds by GC/MS - LCSD

Sample ID: LQ42856-003
Batch: 42856
Analytical Method: 8260B

Matrix: Aqueous
Prep Method: 5030B

Parameter	Spike Amount (ug/L)	Result (ug/L)	Q	Dil	% Rec	% RPD	% Rec Limit	% RPD Limit	Analysis Date
Trichlorofluoromethane	50	40		1	79	6.3	60-140	20	09/21/2010 2233
Vinyl chloride	50	28	N	1	56	9.1	60-140	20	09/21/2010 2233
Xylenes (total)	100	93		1	93	3.2	70-130	20	09/21/2010 2233

Surrogate	Q	% Rec	Acceptance Limit
Bromofluorobenzene		101	70-130
1,2-Dichloroethane-d4		88	70-130
Toluene-d8		102	70-130

PQL = Practical quantitation limit
ND = Not detected at or above the MDL
P = The RPD between two GC columns exceeds 40%
J = Estimated result < PQL and ≥ MDL
N - Recovery is out of criteria
+ - RPD is out of criteria

Where applicable, all soil sample analysis are reported on a dry weight basis unless flagged with a "W"

Note: Calculations are performed before rounding to avoid round-off errors in calculated results

Volatile Organic Compounds by GC/MS - MB

Sample ID: LQ42960-001
Batch: 42960
Analytical Method: 8260B

Matrix: Aqueous
Prep Method: 5030B

Parameter	Result	Q	Dil	PQL	MDL	Units	Analysis Date
Dichlorodifluoromethane	ND		1	0.50	0.071	ug/L	09/23/2010 0119

Surrogate	Q	% Rec	Acceptance Limit
Bromofluorobenzene		90	70-130
1,2-Dichloroethane-d4		88	70-130
Toluene-d8		88	70-130

PQL = Practical quantitation limit
ND = Not detected at or above the MDL
P = The RPD between two GC columns exceeds 40%
J = Estimated result < PQL and ≥ MDL
N - Recovery is out of criteria
+ - RPD is out of criteria

Where applicable, all soil sample analysis are reported on a dry weight basis unless flagged with a "W"

Note: Calculations are performed before rounding to avoid round-off errors in calculated results

Volatile Organic Compounds by GC/MS - LCS

Sample ID: LQ42960-002
Batch: 42960
Analytical Method: 8260B

Matrix: Aqueous
Prep Method: 5030B

Parameter	Spike Amount (ug/L)	Result (ug/L)	Q	Dil	% Rec	% Rec Limit	Analysis Date
Dichlorodifluoromethane	50	46		1	91	60-140	09/22/2010 2158

Surrogate	Q	% Rec	Acceptance Limit
Bromofluorobenzene		95	70-130
1,2-Dichloroethane-d4		85	70-130
Toluene-d8		89	70-130

PQL = Practical quantitation limit
ND = Not detected at or above the MDL
P = The RPD between two GC columns exceeds 40%
J = Estimated result < PQL and ≥ MDL
N - Recovery is out of criteria
+ - RPD is out of criteria

Where applicable, all soil sample analysis are reported on a dry weight basis unless flagged with a "W"

Note: Calculations are performed before rounding to avoid round-off errors in calculated results

Volatile Organic Compounds by GC/MS - LCSD

Sample ID: LQ42960-003
Batch: 42960
Analytical Method: 8260B

Matrix: Aqueous
Prep Method: 5030B

Parameter	Spike Amount (ug/L)	Result (ug/L)	Q	Dil	% Rec	% RPD	% Rec Limit	% RPD Limit	Analysis Date
Dichlorodifluoromethane	50	43		1	87	4.6	60-140	20	09/23/2010 0017

Surrogate	Q	% Rec	Acceptance Limit
Bromofluorobenzene		96	70-130
1,2-Dichloroethane-d4		83	70-130
Toluene-d8		88	70-130

PQL = Practical quantitation limit
ND = Not detected at or above the MDL
P = The RPD between two GC columns exceeds 40%
J = Estimated result < PQL and ≥ MDL
N - Recovery is out of criteria
+ - RPD is out of criteria

Where applicable, all soil sample analysis are reported on a dry weight basis unless flagged with a "W"

Note: Calculations are performed before rounding to avoid round-off errors in calculated results

SHEALY **Chain of Custody Record**

SHEALY ENVIRONMENTAL SERVICES, INC.
106 Vantage Point Drive
West Columbia, South Carolina 29172
Telephone No. (803) 791-9700 Fax No. (803) 791-9111

Number 107031

Client: ARCADIS
Address: 801 Corporate Center Dr.
City: Raleigh | State: NC | Zip Code: 27607
Project Name: FST-39 DPT Investigation
Project No.: GP09HAFS.F39A.DG0FI
P.O. No.:

Report to Contact: ~~Shelley Gibbons~~ → Allison Fang
Sampler's Signature: X David Twamley
Printed Name: David Twamley

Telephone No. / Fax No. / E-mail: 919-854-1282 / ~~sgibbons@arcadis-us.com~~ → allison.fang@arcadis-us.com
Waybill No.:
Quote No.:
Page 1 of 1
Analysis (Attach list if more space is needed.)
Lot No.: LC17017

Sample ID / Description (Containers for each sample may be combined on one line.)	Date	Time	G=Grab C=Composite	Matrix: Aqueous	Solid	Non-Aqueous		No. of Containers by Preservative Type: Unpres.	H2SO4	HNO3	HCl	NaOH	NaS2O3		VOCs (8260)	Remarks / Cooler I.D.
F39TWW13 (30-35)	9/15/10	0915	G	X							X				X	
F39TWW13 (35-40)		0940	G	X							X				X	
F39TWW13 (40-45)		1030	G	X							X				X	
F39TWW13_Dup		~	G	X							X				X	
F39TWW13 (45-50)		1100	G	X							X				X	
F39TWW13 (50-55)		1200	G	X							X				X	
Trip Blank		~		X							X				X	

Possible Hazard Identification: ☐ Non-Hazard ☐ Flammable ☐ Skin Irritant ☐ Poison ☐ Unknown
Sample Disposal: ☐ Return to Client ☒ Disposal by Lab
Note: All samples are retained for six weeks from receipt unless other arrangements are made.
Turn Around Time Required (Prior lab approval required for expedited TAT.): ☒ Standard ☐ Rush (Specify)
QC Requirements (Specify):

1. Relinquished by: David Twamley	Date: 9/16/10	Time: 1300	1. Received by:	Date:	Time:
2. Relinquished by:	Date:	Time:	2. Received by:	Date:	Time: EL 9/17/10
3. Relinquished by: FEDEX	Date: 9/17/10	Time: 0950	3. Laboratory received by:	Date: 9/17/10	Time: ~~1300~~ 0950

Comments:
LAB USE ONLY: Received on ice (Circle) Yes / No Ice Pack
Receipt Temp. 1.7 °C

DISTRIBUTION: WHITE & YELLOW-Return to laboratory with Sample(s); PINK-Field/Client Copy

Document Number: F-AD-012 Effective Date: 08-04-02

SHEALY ENVIRONMENTAL SERVICES, INC.

Shealy Environmental Services, Inc.
Document Number: 1-425-0.6
Revision Number: 8

Page 1 of 1
Replaces Date: 09/22/06
Effective Date: 05/29/07

Sample Receipt Checklist (SRC)

Client: Arcadis Cooler Inspected by/date: 9/17/10 Lot #: LE17017

Means of receipt: ☐ SESI ☐ Client ☐ UPS ☑ FedEx ☐ Airborne Exp ☐ Other

Yes ☑	No ☐	NA ☐	1. Were custody seals present on the cooler?
Yes ☑	No ☐	NA ☐	2. If custody seals were present, were they intact and unbroken?

Cooler ID/temperature upon receipt 1.7 / ___ °C ___ / ___ °C ___ / ___ °C ___ / ___ °C
___ / ___ °C ___ / ___ °C ___ / ___ °C ___ / ___ °C

Method: ☐ Temperature Blank ☑ Against Bottles
Method of coolant: ☑ Wet Ice ☐ Blue Ice ☐ Dry Ice ☐ None

If response is No (or Yes for 14, 15, 16), an explanation/resolution must be provided.

Yes ☐	No ☐	NA ☑	3. If temperature of any cooler exceeded 6.0°C, was Project Manager notified? PM notified by SRC, phone, note (circle one), other: ___. (For coolers received via commercial courier, PMs are to be notified immediately.
Yes ☑	No ☐	NA ☐	4. Is the commercial courier's packing slip attached to this form?
Yes ☐	No ☑	NA ☐	5. Were proper custody procedures (relinquished/received) followed?
Yes ☑	No ☐	NA ☐	6. Were sample IDs listed?
Yes ☑	No ☐	NA ☐	7. Was collection date & time listed?
Yes ☑	No ☐	NA ☐	8. Were tests to be performed listed on the COC or was quote # provided?
Yes ☑	No ☐	NA ☐	9. Did all samples arrive in the proper containers for each test?
Yes ☑	No ☐	NA ☐	10. Did all container label information (ID, date, time) agree with COC?
Yes ☑	No ☐	NA ☐	11. Did all containers arrive in good condition (unbroken, lids on, etc.)?
Yes ☑	No ☐	NA ☐	12. Was adequate sample volume available?
Yes ☐	No ☑	NA ☐	13. Were all samples received within ½ the holding time or 48 hours, whichever comes first?
Yes ☐	No ☑	NA ☐	14. Were any samples containers missing?
Yes ☐	No ☑	NA ☐	15. Were there any excess samples not listed on COC?
Yes ☑	No ☐	NA ☐	16. Were bubbles present >"pea-size" (¼" or 6mm in diameter) in any VOA vials?
Yes ☐	No ☐	NA ☑	17. Were all metals/O&G/HEM/nutrient samples received at a pH of <2?
Yes ☐	No ☐	NA ☑	18. Were all cyanide and/or sulfide samples received at a pH >12?
Yes ☐	No ☐	NA ☑	19. Were all applicable NH3/TKN/cyanide/phenol/BNA/pest/PCB/herb (<0.2mg/L) and toxicity (<0.1mg/L) samples free of residual chlorine?
Yes ☐	No ☐	NA ☑	20. Were collection temperatures documented on the COC for NC samples?

Sample Preservation (Must be completed for any sample(s) incorrectly preserved or with headspace.)

Sample(s) ___ were received incorrectly preserved and were adjusted accordingly in sample receiving with ___ (H_2SO_4,HNO_3,HCl,NaOH) with the SR # (number) -006(2)

Sample(s) -002(3), -003(3) -004(3), -005(3) were received with bubbles >6 mm in diameter.

Sample(s) ___ were received with TRC >0.2 mg/L for NH3/TKN/cyanide/BNA/pest/PCB/herb.

Toxicity sample(s) ___ analyzed by method 330.5.

Date 9/16/10 FedEx Tracking Number 870985632335

Sender's Name Dave Twamley Phone 919 854-1282

Corrective Action taken, if necessary:
Was client notified: Yes ☐ No ☐
SESI employee: ___
Comments: ___

Company ARCADIS G & M OF NC INC
Address 801 CORPORATE CENTER DR
City RALEIGH State NC ZIP 27607-5073
Customer Internal Billing Reference GP09HAFS.F39A.DG0FI.

Report of Analysis

ARCADIS U.S., Inc.
30 Patewood Drive
Suite 155
Greenville, SC 29615
Attention: Allison Fang

Project Name: Fort Stewart FST-39

Project Number: GP08HAFS.F39A.D60FI

Lot Number: LK03046

Date Completed: 11/05/2010

Nisreen Saikaly
Project Manager

This report shall not be reproduced, except in its entirety, without the written approval of Shealy Environmental Services, Inc.

The following non-paginated documents are considered part of this report: Chain of Custody Record and Sample Receipt Checklist.

* L K 0 3 0 4 6 *

Case Narrative
ARCADIS U.S., Inc.
Lot Number: LK03046

This Report of Analysis contains the analytical result(s) for the sample(s) listed on the Sample Summary following this Case Narrative. The sample receiving date is documented in the header information associated with each sample.

Sample receipt, sample analysis, and data review have been performed in accordance with the most current approved NELAC standards, the Shealy Environmental Services, Inc. ("Shealy") Quality Assurance Management Plan (QAMP), standard operating procedures (SOPs), and Shealy policies. Any exceptions to the NELAC standards, the QAMP, SOPs or policies are qualified on the results page or discussed below.

If you have any questions regarding this report please contact the Shealy Project Manager listed on the cover page.

Sample Summary

ARCADIS U.S., Inc.

Lot Number: LK03046

Sample Number	Sample ID	Matrix	Date Sampled	Date Received
001	B-2 (30-34')	Aqueous	11/02/2010 0843	11/03/2010
002	B-2 (36-40')	Aqueous	11/02/2010 0924	11/03/2010
003	B-2 (42-46')	Aqueous	11/02/2010 1045	11/03/2010
004	D-25 (30-34')	Aqueous	11/02/2010 1421	11/03/2010
005	D-25 (36-40')	Aqueous	11/02/2010 1538	11/03/2010
006	D-26 (33-35')	Aqueous	11/02/2010 1336	11/03/2010
007	Trip Blank	Aqueous	11/03/2010 0900	11/03/2010

(7 samples)

Executive Summary
ARCADIS U.S., Inc.
Lot Number: LK03046

Sample	Sample ID	Matrix	Parameter	Method	Result	Q	Units	Page
001	B-2 (30-34')	Aqueous	Benzene	8260B	0.12	J	ug/L	5
001	B-2 (30-34')	Aqueous	Carbon disulfide	8260B	0.37	J	ug/L	5
001	B-2 (30-34')	Aqueous	Toluene	8260B	0.24	J	ug/L	5
001	B-2 (30-34')	Aqueous	Xylenes (total)	8260B	0.20	J	ug/L	6
002	B-2 (36-40')	Aqueous	Benzene	8260B	0.31	J	ug/L	7
002	B-2 (36-40')	Aqueous	cis-1,2-Dichloroethene	8260B	0.41	J	ug/L	7
002	B-2 (36-40')	Aqueous	Tetrachloroethene	8260B	0.61		ug/L	7
002	B-2 (36-40')	Aqueous	Toluene	8260B	0.51		ug/L	7
002	B-2 (36-40')	Aqueous	Trichloroethene	8260B	2.8		ug/L	8
002	B-2 (36-40')	Aqueous	Xylenes (total)	8260B	0.36	J	ug/L	8
003	B-2 (42-46')	Aqueous	Acetone	8260B	36		ug/L	9
003	B-2 (42-46')	Aqueous	Benzene	8260B	0.67		ug/L	9
003	B-2 (42-46')	Aqueous	2-Butanone (MEK)	8260B	6.1	J	ug/L	9
003	B-2 (42-46')	Aqueous	Chloromethane (Methyl chloride)	8260B	1.1		ug/L	9
003	B-2 (42-46')	Aqueous	cis-1,2-Dichloroethene	8260B	1.4		ug/L	9
003	B-2 (42-46')	Aqueous	Toluene	8260B	0.55		ug/L	9
003	B-2 (42-46')	Aqueous	Trichloroethene	8260B	2.1		ug/L	10
004	D-25 (30-34')	Aqueous	trans-1,2-Dichloroethene	8260B	9.4		ug/L	11
004	D-25 (30-34')	Aqueous	1,1-Dichloroethene	8260B	3.5	J	ug/L	11
004	D-25 (30-34')	Aqueous	cis-1,2-Dichloroethene	8260B	380		ug/L	11
004	D-25 (30-34')	Aqueous	Tetrachloroethene	8260B	82		ug/L	11
004	D-25 (30-34')	Aqueous	Trichloroethene	8260B	1300		ug/L	12
005	D-25 (36-40')	Aqueous	Acetone	8260B	23		ug/L	13
005	D-25 (36-40')	Aqueous	Benzene	8260B	1.4		ug/L	13
005	D-25 (36-40')	Aqueous	Cyclohexane	8260B	0.71		ug/L	13
005	D-25 (36-40')	Aqueous	trans-1,2-Dichloroethene	8260B	4.5		ug/L	13
005	D-25 (36-40')	Aqueous	1,1-Dichloroethene	8260B	1.7		ug/L	13
005	D-25 (36-40')	Aqueous	cis-1,2-Dichloroethene	8260B	190		ug/L	13
005	D-25 (36-40')	Aqueous	2-Hexanone	8260B	0.28	J	ug/L	13
005	D-25 (36-40')	Aqueous	Tetrachloroethene	8260B	6.9		ug/L	13
005	D-25 (36-40')	Aqueous	Toluene	8260B	1.6		ug/L	13
005	D-25 (36-40')	Aqueous	Trichloroethene	8260B	270		ug/L	14
005	D-25 (36-40')	Aqueous	Vinyl chloride	8260B	0.81		ug/L	14
005	D-25 (36-40')	Aqueous	Xylenes (total)	8260B	0.56		ug/L	14
006	D-26 (33-35')	Aqueous	trans-1,2-Dichloroethene	8260B	9.0		ug/L	15
006	D-26 (33-35')	Aqueous	1,1-Dichloroethene	8260B	2.3	J	ug/L	15
006	D-26 (33-35')	Aqueous	cis-1,2-Dichloroethene	8260B	220		ug/L	15
006	D-26 (33-35')	Aqueous	Tetrachloroethene	8260B	260		ug/L	15
006	D-26 (33-35')	Aqueous	Trichloroethene	8260B	1100		ug/L	16

(39 detections)

Volatile Organic Compounds by GC/MS

Client: ARCADIS U.S., Inc.
Laboratory ID: LK03046-001
Description: B-2 (30-34')
Matrix: Aqueous
Date Sampled: 11/02/2010 0843
Date Received: 11/03/2010

Run	Prep Method	Analytical Method	Dilution	Analysis Date	Analyst	Prep Date	Batch
1	5030B	8260B	1	11/05/2010 1712	DLB		45932

Parameter	CAS Number	Analytical Method	Result	Q	PQL	MDL	Units	Run
Acetone	67-64-1	8260B	ND		10	3.3	ug/L	1
Benzene	71-43-2	8260B	0.12	J	0.50	0.027	ug/L	1
Bromodichloromethane	75-27-4	8260B	ND		0.50	0.17	ug/L	1
Bromoform	75-25-2	8260B	ND		0.50	0.010	ug/L	1
Bromomethane (Methyl bromide)	74-83-9	8260B	ND		0.50	0.20	ug/L	1
2-Butanone (MEK)	78-93-3	8260B	ND		10	2.0	ug/L	1
Carbon disulfide	75-15-0	8260B	0.37	J	0.50	0.097	ug/L	1
Carbon tetrachloride	56-23-5	8260B	ND		0.50	0.085	ug/L	1
Chlorobenzene	108-90-7	8260B	ND		0.50	0.17	ug/L	1
Chloroethane	75-00-3	8260B	ND		0.50	0.17	ug/L	1
Chloroform	67-66-3	8260B	ND		0.50	0.17	ug/L	1
Chloromethane (Methyl chloride)	74-87-3	8260B	ND		0.50	0.17	ug/L	1
Cyclohexane	110-82-7	8260B	ND		0.50	0.30	ug/L	1
1,2-Dibromo-3-chloropropane (DBCP)	96-12-8	8260B	ND		0.50	0.069	ug/L	1
Dibromochloromethane	124-48-1	8260B	ND		0.50	0.17	ug/L	1
1,2-Dibromoethane (EDB)	106-93-4	8260B	ND		0.50	0.061	ug/L	1
1,3-Dichlorobenzene	541-73-1	8260B	ND		0.50	0.17	ug/L	1
1,2-Dichlorobenzene	95-50-1	8260B	ND		0.50	0.17	ug/L	1
1,4-Dichlorobenzene	106-46-7	8260B	ND		0.50	0.17	ug/L	1
Dichlorodifluoromethane	75-71-8	8260B	ND		0.50	0.071	ug/L	1
1,1-Dichloroethane	75-34-3	8260B	ND		0.50	0.054	ug/L	1
1,2-Dichloroethane	107-06-2	8260B	ND		0.50	0.023	ug/L	1
trans-1,2-Dichloroethene	156-60-5	8260B	ND		0.50	0.079	ug/L	1
1,1-Dichloroethene	75-35-4	8260B	ND		0.50	0.094	ug/L	1
cis-1,2-Dichloroethene	156-59-2	8260B	ND		0.50	0.087	ug/L	1
1,2-Dichloropropane	78-87-5	8260B	ND		0.50	0.081	ug/L	1
trans-1,3-Dichloropropene	10061-02-6	8260B	ND		0.50	0.18	ug/L	1
cis-1,3-Dichloropropene	10061-01-5	8260B	ND		0.50	0.090	ug/L	1
Ethylbenzene	100-41-4	8260B	ND		0.50	0.17	ug/L	1
2-Hexanone	591-78-6	8260B	ND		10	0.27	ug/L	1
Isopropylbenzene	98-82-8	8260B	ND		0.50	0.029	ug/L	1
Methyl acetate	79-20-9	8260B	ND		1.0	0.30	ug/L	1
Methyl tertiary butyl ether (MTBE)	1634-04-4	8260B	ND		0.50	0.019	ug/L	1
4-Methyl-2-pentanone	108-10-1	8260B	ND		10	0.31	ug/L	1
Methylcyclohexane	108-87-2	8260B	ND		5.0	0.95	ug/L	1
Methylene chloride	75-09-2	8260B	ND		0.50	0.17	ug/L	1
Styrene	100-42-5	8260B	ND		0.50	0.015	ug/L	1
1,1,2,2-Tetrachloroethane	79-34-5	8260B	ND		0.50	0.013	ug/L	1
Tetrachloroethene	127-18-4	8260B	ND		0.50	0.014	ug/L	1
Toluene	108-88-3	8260B	0.24	J	0.50	0.17	ug/L	1
1,1,2-Trichloro-1,2,2-Trifluoroethane	76-13-1	8260B	ND		0.50	0.30	ug/L	1
1,2,4-Trichlorobenzene	120-82-1	8260B	ND		0.50	0.17	ug/L	1
1,1,1-Trichloroethane	71-55-6	8260B	ND		0.50	0.029	ug/L	1
1,1,2-Trichloroethane	79-00-5	8260B	ND		0.50	0.031	ug/L	1

PQL = Practical quantitation limit
B = Detected in the method blank
E = Quantitation of compound exceeded the calibration range
ND = Not detected at or above the MDL
J = Estimated result < PQL and ≥ MDL
P = The RPD between two GC columns exceeds 40%
Where applicable, all soil sample analysis are reported on a dry weight basis unless flagged with a "W"
N = Recovery is out of criteria
H = Out of holding time

Volatile Organic Compounds by GC/MS

Client: ARCADIS U.S., Inc.
Laboratory ID: LK03046-001
Description: B-2 (30-34')
Matrix: Aqueous
Date Sampled: 11/02/2010 0843
Date Received: 11/03/2010

Run	Prep Method	Analytical Method	Dilution	Analysis Date	Analyst	Prep Date	Batch
1	5030B	8260B	1	11/05/2010 1712	DLB		45932

Parameter	CAS Number	Analytical Method	Result	Q	PQL	MDL	Units	Run
Trichloroethene	79-01-6	8260B	ND		0.50	0.024	ug/L	1
Trichlorofluoromethane	75-69-4	8260B	ND		0.50	0.051	ug/L	1
Vinyl chloride	75-01-4	8260B	ND		0.50	0.065	ug/L	1
Xylenes (total)	1330-20-7	8260B	0.20	J	0.50	0.17	ug/L	1

Surrogate	Q	Run 1 % Recovery	Acceptance Limits
1,2-Dichloroethane-d4		105	70-130
Bromofluorobenzene		88	70-130
Toluene-d8		105	70-130

PQL = Practical quantitation limit
B = Detected in the method blank
E = Quantitation of compound exceeded the calibration range
ND = Not detected at or above the MDL
J = Estimated result < PQL and ≥ MDL
P = The RPD between two GC columns exceeds 40%
Where applicable, all soil sample analysis are reported on a dry weight basis unless flagged with a "W"
N = Recovery is out of criteria
H = Out of holding time

Volatile Organic Compounds by GC/MS

Client: ARCADIS U.S., Inc.
Laboratory ID: LK03046-002
Description: B-2 (36-40')
Matrix: Aqueous
Date Sampled: 11/02/2010 0924
Date Received: 11/03/2010

Run	Prep Method	Analytical Method	Dilution	Analysis Date	Analyst	Prep Date	Batch
1	5030B	8260B	1	11/05/2010 1502	DLB		45932

Parameter	CAS Number	Analytical Method	Result	Q	PQL	MDL	Units	Run
Acetone	67-64-1	8260B	ND		10	3.3	ug/L	1
Benzene	71-43-2	8260B	0.31	J	0.50	0.027	ug/L	1
Bromodichloromethane	75-27-4	8260B	ND		0.50	0.17	ug/L	1
Bromoform	75-25-2	8260B	ND		0.50	0.010	ug/L	1
Bromomethane (Methyl bromide)	74-83-9	8260B	ND		0.50	0.20	ug/L	1
2-Butanone (MEK)	78-93-3	8260B	ND		10	2.0	ug/L	1
Carbon disulfide	75-15-0	8260B	ND		0.50	0.097	ug/L	1
Carbon tetrachloride	56-23-5	8260B	ND		0.50	0.085	ug/L	1
Chlorobenzene	108-90-7	8260B	ND		0.50	0.17	ug/L	1
Chloroethane	75-00-3	8260B	ND		0.50	0.17	ug/L	1
Chloroform	67-66-3	8260B	ND		0.50	0.17	ug/L	1
Chloromethane (Methyl chloride)	74-87-3	8260B	ND		0.50	0.17	ug/L	1
Cyclohexane	110-82-7	8260B	ND		0.50	0.30	ug/L	1
1,2-Dibromo-3-chloropropane (DBCP)	96-12-8	8260B	ND		0.50	0.069	ug/L	1
Dibromochloromethane	124-48-1	8260B	ND		0.50	0.17	ug/L	1
1,2-Dibromoethane (EDB)	106-93-4	8260B	ND		0.50	0.061	ug/L	1
1,3-Dichlorobenzene	541-73-1	8260B	ND		0.50	0.17	ug/L	1
1,2-Dichlorobenzene	95-50-1	8260B	ND		0.50	0.17	ug/L	1
1,4-Dichlorobenzene	106-46-7	8260B	ND		0.50	0.17	ug/L	1
Dichlorodifluoromethane	75-71-8	8260B	ND		0.50	0.071	ug/L	1
1,1-Dichloroethane	75-34-3	8260B	ND		0.50	0.054	ug/L	1
1,2-Dichloroethane	107-06-2	8260B	ND		0.50	0.023	ug/L	1
trans-1,2-Dichloroethene	156-60-5	8260B	ND		0.50	0.079	ug/L	1
1,1-Dichloroethene	75-35-4	8260B	ND		0.50	0.094	ug/L	1
cis-1,2-Dichloroethene	156-59-2	8260B	0.41	J	0.50	0.087	ug/L	1
1,2-Dichloropropane	78-87-5	8260B	ND		0.50	0.081	ug/L	1
trans-1,3-Dichloropropene	10061-02-6	8260B	ND		0.50	0.18	ug/L	1
cis-1,3-Dichloropropene	10061-01-5	8260B	ND		0.50	0.090	ug/L	1
Ethylbenzene	100-41-4	8260B	ND		0.50	0.17	ug/L	1
2-Hexanone	591-78-6	8260B	ND		10	0.27	ug/L	1
Isopropylbenzene	98-82-8	8260B	ND		0.50	0.029	ug/L	1
Methyl acetate	79-20-9	8260B	ND		1.0	0.30	ug/L	1
Methyl tertiary butyl ether (MTBE)	1634-04-4	8260B	ND		0.50	0.019	ug/L	1
4-Methyl-2-pentanone	108-10-1	8260B	ND		10	0.31	ug/L	1
Methylcyclohexane	108-87-2	8260B	ND		5.0	0.95	ug/L	1
Methylene chloride	75-09-2	8260B	ND		0.50	0.17	ug/L	1
Styrene	100-42-5	8260B	ND		0.50	0.015	ug/L	1
1,1,2,2-Tetrachloroethane	79-34-5	8260B	ND		0.50	0.013	ug/L	1
Tetrachloroethene	127-18-4	8260B	0.61		0.50	0.014	ug/L	1
Toluene	108-88-3	8260B	0.51		0.50	0.17	ug/L	1
1,1,2-Trichloro-1,2,2-Trifluoroethane	76-13-1	8260B	ND		0.50	0.30	ug/L	1
1,2,4-Trichlorobenzene	120-82-1	8260B	ND		0.50	0.17	ug/L	1
1,1,1-Trichloroethane	71-55-6	8260B	ND		0.50	0.029	ug/L	1
1,1,2-Trichloroethane	79-00-5	8260B	ND		0.50	0.031	ug/L	1

PQL = Practical quantitation limit
B = Detected in the method blank
E = Quantitation of compound exceeded the calibration range
ND = Not detected at or above the MDL
J = Estimated result < PQL and ≥ MDL
P = The RPD between two GC columns exceeds 40%
Where applicable, all soil sample analysis are reported on a dry weight basis unless flagged with a "W"
N = Recovery is out of criteria
H = Out of holding time

Volatile Organic Compounds by GC/MS

Client: ARCADIS U.S., Inc.
Laboratory ID: LK03046-002
Description: B-2 (36-40')
Matrix: Aqueous
Date Sampled: 11/02/2010 0924
Date Received: 11/03/2010

Run	Prep Method	Analytical Method	Dilution	Analysis Date	Analyst	Prep Date	Batch
1	5030B	8260B	1	11/05/2010 1502	DLB		45932

Parameter	CAS Number	Analytical Method	Result	Q	PQL	MDL	Units	Run
Trichloroethene	79-01-6	8260B	2.8		0.50	0.024	ug/L	1
Trichlorofluoromethane	75-69-4	8260B	ND		0.50	0.051	ug/L	1
Vinyl chloride	75-01-4	8260B	ND		0.50	0.065	ug/L	1
Xylenes (total)	1330-20-7	8260B	0.36	J	0.50	0.17	ug/L	1

Surrogate	Q	Run 1 % Recovery	Acceptance Limits
1,2-Dichloroethane-d4		100	70-130
Bromofluorobenzene		89	70-130
Toluene-d8		105	70-130

PQL = Practical quantitation limit
B = Detected in the method blank
E = Quantitation of compound exceeded the calibration range
ND = Not detected at or above the MDL
J = Estimated result < PQL and ≥ MDL
P = The RPD between two GC columns exceeds 40%
Where applicable, all soil sample analysis are reported on a dry weight basis unless flagged with a "W"
N = Recovery is out of criteria
H = Out of holding time

Volatile Organic Compounds by GC/MS

Client: ARCADIS U.S., Inc.
Laboratory ID: LK03046-003
Description: B-2 (42-46')
Matrix: Aqueous
Date Sampled: 11/02/2010 1045
Date Received: 11/03/2010

Run	Prep Method	Analytical Method	Dilution	Analysis Date	Analyst	Prep Date	Batch
1	5030B	8260B	1	11/05/2010 1523	DLB		45932

Parameter	CAS Number	Analytical Method	Result	Q	PQL	MDL	Units	Run
Acetone	67-64-1	8260B	36		10	3.3	ug/L	1
Benzene	71-43-2	8260B	0.67		0.50	0.027	ug/L	1
Bromodichloromethane	75-27-4	8260B	ND		0.50	0.17	ug/L	1
Bromoform	75-25-2	8260B	ND		0.50	0.010	ug/L	1
Bromomethane (Methyl bromide)	74-83-9	8260B	ND		0.50	0.20	ug/L	1
2-Butanone (MEK)	78-93-3	8260B	6.1	J	10	2.0	ug/L	1
Carbon disulfide	75-15-0	8260B	ND		0.50	0.097	ug/L	1
Carbon tetrachloride	56-23-5	8260B	ND		0.50	0.085	ug/L	1
Chlorobenzene	108-90-7	8260B	ND		0.50	0.17	ug/L	1
Chloroethane	75-00-3	8260B	ND		0.50	0.17	ug/L	1
Chloroform	67-66-3	8260B	ND		0.50	0.17	ug/L	1
Chloromethane (Methyl chloride)	74-87-3	8260B	1.1		0.50	0.17	ug/L	1
Cyclohexane	110-82-7	8260B	ND		0.50	0.30	ug/L	1
1,2-Dibromo-3-chloropropane (DBCP)	96-12-8	8260B	ND		0.50	0.069	ug/L	1
Dibromochloromethane	124-48-1	8260B	ND		0.50	0.17	ug/L	1
1,2-Dibromoethane (EDB)	106-93-4	8260B	ND		0.50	0.061	ug/L	1
1,3-Dichlorobenzene	541-73-1	8260B	ND		0.50	0.17	ug/L	1
1,2-Dichlorobenzene	95-50-1	8260B	ND		0.50	0.17	ug/L	1
1,4-Dichlorobenzene	106-46-7	8260B	ND		0.50	0.17	ug/L	1
Dichlorodifluoromethane	75-71-8	8260B	ND		0.50	0.071	ug/L	1
1,1-Dichloroethane	75-34-3	8260B	ND		0.50	0.054	ug/L	1
1,2-Dichloroethane	107-06-2	8260B	ND		0.50	0.023	ug/L	1
trans-1,2-Dichloroethene	156-60-5	8260B	ND		0.50	0.079	ug/L	1
1,1-Dichloroethene	75-35-4	8260B	ND		0.50	0.094	ug/L	1
cis-1,2-Dichloroethene	156-59-2	8260B	1.4		0.50	0.087	ug/L	1
1,2-Dichloropropane	78-87-5	8260B	ND		0.50	0.081	ug/L	1
trans-1,3-Dichloropropene	10061-02-6	8260B	ND		0.50	0.18	ug/L	1
cis-1,3-Dichloropropene	10061-01-5	8260B	ND		0.50	0.090	ug/L	1
Ethylbenzene	100-41-4	8260B	ND		0.50	0.17	ug/L	1
2-Hexanone	591-78-6	8260B	ND		10	0.27	ug/L	1
Isopropylbenzene	98-82-8	8260B	ND		0.50	0.029	ug/L	1
Methyl acetate	79-20-9	8260B	ND		1.0	0.30	ug/L	1
Methyl tertiary butyl ether (MTBE)	1634-04-4	8260B	ND		0.50	0.019	ug/L	1
4-Methyl-2-pentanone	108-10-1	8260B	ND		10	0.31	ug/L	1
Methylcyclohexane	108-87-2	8260B	ND		5.0	0.95	ug/L	1
Methylene chloride	75-09-2	8260B	ND		0.50	0.17	ug/L	1
Styrene	100-42-5	8260B	ND		0.50	0.015	ug/L	1
1,1,2,2-Tetrachloroethane	79-34-5	8260B	ND		0.50	0.013	ug/L	1
Tetrachloroethene	127-18-4	8260B	ND		0.50	0.014	ug/L	1
Toluene	108-88-3	8260B	0.55		0.50	0.17	ug/L	1
1,1,2-Trichloro-1,2,2-Trifluoroethane	76-13-1	8260B	ND		0.50	0.30	ug/L	1
1,2,4-Trichlorobenzene	120-82-1	8260B	ND		0.50	0.17	ug/L	1
1,1,1-Trichloroethane	71-55-6	8260B	ND		0.50	0.029	ug/L	1
1,1,2-Trichloroethane	79-00-5	8260B	ND		0.50	0.031	ug/L	1

PQL = Practical quantitation limit
B = Detected in the method blank
E = Quantitation of compound exceeded the calibration range
ND = Not detected at or above the MDL
J = Estimated result < PQL and ≥ MDL
P = The RPD between two GC columns exceeds 40%
Where applicable, all soil sample analysis are reported on a dry weight basis unless flagged with a "W"
N = Recovery is out of criteria
H = Out of holding time

Volatile Organic Compounds by GC/MS

Client: ARCADIS U.S., Inc.
Laboratory ID: LK03046-003
Description: B-2 (42-46')
Matrix: Aqueous
Date Sampled: 11/02/2010 1045
Date Received: 11/03/2010

Run	Prep Method	Analytical Method	Dilution	Analysis Date	Analyst	Prep Date	Batch
1	5030B	8260B	1	11/05/2010 1523	DLB		45932

Parameter	CAS Number	Analytical Method	Result	Q	PQL	MDL	Units	Run
Trichloroethene	79-01-6	8260B	2.1		0.50	0.024	ug/L	1
Trichlorofluoromethane	75-69-4	8260B	ND		0.50	0.051	ug/L	1
Vinyl chloride	75-01-4	8260B	ND		0.50	0.065	ug/L	1
Xylenes (total)	1330-20-7	8260B	ND		0.50	0.17	ug/L	1

Surrogate	Q	Run 1 % Recovery	Acceptance Limits
1,2-Dichloroethane-d4		101	70-130
Bromofluorobenzene		89	70-130
Toluene-d8		105	70-130

PQL = Practical quantitation limit
B = Detected in the method blank
E = Quantitation of compound exceeded the calibration range
ND = Not detected at or above the MDL
J = Estimated result < PQL and ≥ MDL
P = The RPD between two GC columns exceeds 40%
Where applicable, all soil sample analysis are reported on a dry weight basis unless flagged with a "W"
N = Recovery is out of criteria
H = Out of holding time

Volatile Organic Compounds by GC/MS

Client: ARCADIS U.S., Inc.
Laboratory ID: LK03046-004
Description: D-25 (30-34')
Matrix: Aqueous
Date Sampled: 11/02/2010 1421
Date Received: 11/03/2010

Run	Prep Method	Analytical Method	Dilution	Analysis Date	Analyst	Prep Date	Batch
1	5030B	8260B	10	11/05/2010 1607	DLB		45932

Parameter	CAS Number	Analytical Method	Result	Q	PQL	MDL	Units	Run
Acetone	67-64-1	8260B	ND		100	33	ug/L	1
Benzene	71-43-2	8260B	ND		5.0	0.27	ug/L	1
Bromodichloromethane	75-27-4	8260B	ND		5.0	1.7	ug/L	1
Bromoform	75-25-2	8260B	ND		5.0	0.10	ug/L	1
Bromomethane (Methyl bromide)	74-83-9	8260B	ND		5.0	2.0	ug/L	1
2-Butanone (MEK)	78-93-3	8260B	ND		100	20	ug/L	1
Carbon disulfide	75-15-0	8260B	ND		5.0	0.97	ug/L	1
Carbon tetrachloride	56-23-5	8260B	ND		5.0	0.85	ug/L	1
Chlorobenzene	108-90-7	8260B	ND		5.0	1.7	ug/L	1
Chloroethane	75-00-3	8260B	ND		5.0	1.7	ug/L	1
Chloroform	67-66-3	8260B	ND		5.0	1.7	ug/L	1
Chloromethane (Methyl chloride)	74-87-3	8260B	ND		5.0	1.7	ug/L	1
Cyclohexane	110-82-7	8260B	ND		5.0	3.0	ug/L	1
1,2-Dibromo-3-chloropropane (DBCP)	96-12-8	8260B	ND		5.0	0.69	ug/L	1
Dibromochloromethane	124-48-1	8260B	ND		5.0	1.7	ug/L	1
1,2-Dibromoethane (EDB)	106-93-4	8260B	ND		5.0	0.61	ug/L	1
1,3-Dichlorobenzene	541-73-1	8260B	ND		5.0	1.7	ug/L	1
1,2-Dichlorobenzene	95-50-1	8260B	ND		5.0	1.7	ug/L	1
1,4-Dichlorobenzene	106-46-7	8260B	ND		5.0	1.7	ug/L	1
Dichlorodifluoromethane	75-71-8	8260B	ND		5.0	0.71	ug/L	1
1,1-Dichloroethane	75-34-3	8260B	ND		5.0	0.54	ug/L	1
1,2-Dichloroethane	107-06-2	8260B	ND		5.0	0.23	ug/L	1
trans-1,2-Dichloroethene	156-60-5	8260B	9.4		5.0	0.79	ug/L	1
1,1-Dichloroethene	75-35-4	8260B	3.5	J	5.0	0.94	ug/L	1
cis-1,2-Dichloroethene	156-59-2	8260B	380		5.0	0.87	ug/L	1
1,2-Dichloropropane	78-87-5	8260B	ND		5.0	0.81	ug/L	1
trans-1,3-Dichloropropene	10061-02-6	8260B	ND		5.0	1.8	ug/L	1
cis-1,3-Dichloropropene	10061-01-5	8260B	ND		5.0	0.90	ug/L	1
Ethylbenzene	100-41-4	8260B	ND		5.0	1.7	ug/L	1
2-Hexanone	591-78-6	8260B	ND		100	2.7	ug/L	1
Isopropylbenzene	98-82-8	8260B	ND		5.0	0.29	ug/L	1
Methyl acetate	79-20-9	8260B	ND		10	3.0	ug/L	1
Methyl tertiary butyl ether (MTBE)	1634-04-4	8260B	ND		5.0	0.19	ug/L	1
4-Methyl-2-pentanone	108-10-1	8260B	ND		100	3.1	ug/L	1
Methylcyclohexane	108-87-2	8260B	ND		50	9.5	ug/L	1
Methylene chloride	75-09-2	8260B	ND		5.0	1.7	ug/L	1
Styrene	100-42-5	8260B	ND		5.0	0.15	ug/L	1
1,1,2,2-Tetrachloroethane	79-34-5	8260B	ND		5.0	0.13	ug/L	1
Tetrachloroethene	127-18-4	8260B	82		5.0	0.14	ug/L	1
Toluene	108-88-3	8260B	ND		5.0	1.7	ug/L	1
1,1,2-Trichloro-1,2,2-Trifluoroethane	76-13-1	8260B	ND		5.0	3.0	ug/L	1
1,2,4-Trichlorobenzene	120-82-1	8260B	ND		5.0	1.7	ug/L	1
1,1,1-Trichloroethane	71-55-6	8260B	ND		5.0	0.29	ug/L	1
1,1,2-Trichloroethane	79-00-5	8260B	ND		5.0	0.31	ug/L	1

PQL = Practical quantitation limit
B = Detected in the method blank
E = Quantitation of compound exceeded the calibration range
ND = Not detected at or above the MDL
J = Estimated result < PQL and ≥ MDL
P = The RPD between two GC columns exceeds 40%
Where applicable, all soil sample analysis are reported on a dry weight basis unless flagged with a "W"
N = Recovery is out of criteria
H = Out of holding time

Volatile Organic Compounds by GC/MS

Client: ARCADIS U.S., Inc.
Laboratory ID: LK03046-004
Description: D-25 (30-34')
Matrix: Aqueous
Date Sampled: 11/02/2010 1421
Date Received: 11/03/2010

Run	Prep Method	Analytical Method	Dilution	Analysis Date	Analyst	Prep Date	Batch
1	5030B	8260B	10	11/05/2010 1607	DLB		45932

Parameter	CAS Number	Analytical Method	Result	Q	PQL	MDL	Units	Run
Trichloroethene	79-01-6	8260B	1300		5.0	0.24	ug/L	1
Trichlorofluoromethane	75-69-4	8260B	ND		5.0	0.51	ug/L	1
Vinyl chloride	75-01-4	8260B	ND		5.0	0.65	ug/L	1
Xylenes (total)	1330-20-7	8260B	ND		5.0	1.7	ug/L	1

Surrogate	Q	Run 1 % Recovery	Acceptance Limits
1,2-Dichloroethane-d4		101	70-130
Bromofluorobenzene		88	70-130
Toluene-d8		104	70-130

PQL = Practical quantitation limit
B = Detected in the method blank
E = Quantitation of compound exceeded the calibration range
ND = Not detected at or above the MDL
J = Estimated result < PQL and ≥ MDL
P = The RPD between two GC columns exceeds 40%
Where applicable, all soil sample analysis are reported on a dry weight basis unless flagged with a "W"
N = Recovery is out of criteria
H = Out of holding time

Volatile Organic Compounds by GC/MS

Client: ARCADIS U.S., Inc.
Laboratory ID: LK03046-005
Description: D-25 (36-40')
Matrix: Aqueous
Date Sampled: 11/02/2010 1538
Date Received: 11/03/2010

Run	Prep Method	Analytical Method	Dilution	Analysis Date	Analyst	Prep Date	Batch
1	5030B	8260B	1	11/05/2010 1755	DLB		45932

Parameter	CAS Number	Analytical Method	Result	Q	PQL	MDL	Units	Run
Acetone	67-64-1	8260B	23		10	3.3	ug/L	1
Benzene	71-43-2	8260B	1.4		0.50	0.027	ug/L	1
Bromodichloromethane	75-27-4	8260B	ND		0.50	0.17	ug/L	1
Bromoform	75-25-2	8260B	ND		0.50	0.010	ug/L	1
Bromomethane (Methyl bromide)	74-83-9	8260B	ND		0.50	0.20	ug/L	1
2-Butanone (MEK)	78-93-3	8260B	ND		10	2.0	ug/L	1
Carbon disulfide	75-15-0	8260B	ND		0.50	0.097	ug/L	1
Carbon tetrachloride	56-23-5	8260B	ND		0.50	0.085	ug/L	1
Chlorobenzene	108-90-7	8260B	ND		0.50	0.17	ug/L	1
Chloroethane	75-00-3	8260B	ND		0.50	0.17	ug/L	1
Chloroform	67-66-3	8260B	ND		0.50	0.17	ug/L	1
Chloromethane (Methyl chloride)	74-87-3	8260B	ND		0.50	0.17	ug/L	1
Cyclohexane	110-82-7	8260B	0.71		0.50	0.30	ug/L	1
1,2-Dibromo-3-chloropropane (DBCP)	96-12-8	8260B	ND		0.50	0.069	ug/L	1
Dibromochloromethane	124-48-1	8260B	ND		0.50	0.17	ug/L	1
1,2-Dibromoethane (EDB)	106-93-4	8260B	ND		0.50	0.061	ug/L	1
1,3-Dichlorobenzene	541-73-1	8260B	ND		0.50	0.17	ug/L	1
1,2-Dichlorobenzene	95-50-1	8260B	ND		0.50	0.17	ug/L	1
1,4-Dichlorobenzene	106-46-7	8260B	ND		0.50	0.17	ug/L	1
Dichlorodifluoromethane	75-71-8	8260B	ND		0.50	0.071	ug/L	1
1,1-Dichloroethane	75-34-3	8260B	ND		0.50	0.054	ug/L	1
1,2-Dichloroethane	107-06-2	8260B	ND		0.50	0.023	ug/L	1
trans-1,2-Dichloroethene	156-60-5	8260B	4.5		0.50	0.079	ug/L	1
1,1-Dichloroethene	75-35-4	8260B	1.7		0.50	0.094	ug/L	1
cis-1,2-Dichloroethene	156-59-2	8260B	190		0.50	0.087	ug/L	1
1,2-Dichloropropane	78-87-5	8260B	ND		0.50	0.081	ug/L	1
trans-1,3-Dichloropropene	10061-02-6	8260B	ND		0.50	0.18	ug/L	1
cis-1,3-Dichloropropene	10061-01-5	8260B	ND		0.50	0.090	ug/L	1
Ethylbenzene	100-41-4	8260B	ND		0.50	0.17	ug/L	1
2-Hexanone	591-78-6	8260B	0.28	J	10	0.27	ug/L	1
Isopropylbenzene	98-82-8	8260B	ND		0.50	0.029	ug/L	1
Methyl acetate	79-20-9	8260B	ND		1.0	0.30	ug/L	1
Methyl tertiary butyl ether (MTBE)	1634-04-4	8260B	ND		0.50	0.019	ug/L	1
4-Methyl-2-pentanone	108-10-1	8260B	ND		10	0.31	ug/L	1
Methylcyclohexane	108-87-2	8260B	ND		5.0	0.95	ug/L	1
Methylene chloride	75-09-2	8260B	ND		0.50	0.17	ug/L	1
Styrene	100-42-5	8260B	ND		0.50	0.015	ug/L	1
1,1,2,2-Tetrachloroethane	79-34-5	8260B	ND		0.50	0.013	ug/L	1
Tetrachloroethene	127-18-4	8260B	6.9		0.50	0.014	ug/L	1
Toluene	108-88-3	8260B	1.6		0.50	0.17	ug/L	1
1,1,2-Trichloro-1,2,2-Trifluoroethane	76-13-1	8260B	ND		0.50	0.30	ug/L	1
1,2,4-Trichlorobenzene	120-82-1	8260B	ND		0.50	0.17	ug/L	1
1,1,1-Trichloroethane	71-55-6	8260B	ND		0.50	0.029	ug/L	1
1,1,2-Trichloroethane	79-00-5	8260B	ND		0.50	0.031	ug/L	1

PQL = Practical quantitation limit
B = Detected in the method blank
E = Quantitation of compound exceeded the calibration range
ND = Not detected at or above the MDL
J = Estimated result < PQL and ≥ MDL
P = The RPD between two GC columns exceeds 40%
Where applicable, all soil sample analysis are reported on a dry weight basis unless flagged with a "W"
N = Recovery is out of criteria
H = Out of holding time

Volatile Organic Compounds by GC/MS

Client: ARCADIS U.S., Inc.
Laboratory ID: LK03046-005
Description: D-25 (36-40')
Matrix: Aqueous
Date Sampled: 11/02/2010 1538
Date Received: 11/03/2010

Run	Prep Method	Analytical Method	Dilution	Analysis Date	Analyst	Prep Date	Batch
1	5030B	8260B	1	11/05/2010 1755	DLB		45932

Parameter	CAS Number	Analytical Method	Result	Q	PQL	MDL	Units	Run
Trichloroethene	79-01-6	8260B	270		0.50	0.024	ug/L	1
Trichlorofluoromethane	75-69-4	8260B	ND		0.50	0.051	ug/L	1
Vinyl chloride	75-01-4	8260B	0.81		0.50	0.065	ug/L	1
Xylenes (total)	1330-20-7	8260B	0.56		0.50	0.17	ug/L	1

Surrogate	Q	Run 1 % Recovery	Acceptance Limits
1,2-Dichloroethane-d4		103	70-130
Bromofluorobenzene		89	70-130
Toluene-d8		105	70-130

PQL = Practical quantitation limit
B = Detected in the method blank
E = Quantitation of compound exceeded the calibration range
ND = Not detected at or above the MDL
J = Estimated result < PQL and ≥ MDL
P = The RPD between two GC columns exceeds 40%
Where applicable, all soil sample analysis are reported on a dry weight basis unless flagged with a "W"
N = Recovery is out of criteria
H = Out of holding time

Volatile Organic Compounds by GC/MS

Client: ARCADIS U.S., Inc.
Laboratory ID: LK03046-006
Description: D-26 (33-35')
Matrix: Aqueous
Date Sampled: 11/02/2010 1336
Date Received: 11/03/2010

Run	Prep Method	Analytical Method	Dilution	Analysis Date	Analyst	Prep Date	Batch
1	5030B	8260B	10	11/05/2010 1545	DLB		45932

Parameter	CAS Number	Analytical Method	Result	Q	PQL	MDL	Units	Run
Acetone	67-64-1	8260B	ND		100	33	ug/L	1
Benzene	71-43-2	8260B	ND		5.0	0.27	ug/L	1
Bromodichloromethane	75-27-4	8260B	ND		5.0	1.7	ug/L	1
Bromoform	75-25-2	8260B	ND		5.0	0.10	ug/L	1
Bromomethane (Methyl bromide)	74-83-9	8260B	ND		5.0	2.0	ug/L	1
2-Butanone (MEK)	78-93-3	8260B	ND		100	20	ug/L	1
Carbon disulfide	75-15-0	8260B	ND		5.0	0.97	ug/L	1
Carbon tetrachloride	56-23-5	8260B	ND		5.0	0.85	ug/L	1
Chlorobenzene	108-90-7	8260B	ND		5.0	1.7	ug/L	1
Chloroethane	75-00-3	8260B	ND		5.0	1.7	ug/L	1
Chloroform	67-66-3	8260B	ND		5.0	1.7	ug/L	1
Chloromethane (Methyl chloride)	74-87-3	8260B	ND		5.0	1.7	ug/L	1
Cyclohexane	110-82-7	8260B	ND		5.0	3.0	ug/L	1
1,2-Dibromo-3-chloropropane (DBCP)	96-12-8	8260B	ND		5.0	0.69	ug/L	1
Dibromochloromethane	124-48-1	8260B	ND		5.0	1.7	ug/L	1
1,2-Dibromoethane (EDB)	106-93-4	8260B	ND		5.0	0.61	ug/L	1
1,3-Dichlorobenzene	541-73-1	8260B	ND		5.0	1.7	ug/L	1
1,2-Dichlorobenzene	95-50-1	8260B	ND		5.0	1.7	ug/L	1
1,4-Dichlorobenzene	106-46-7	8260B	ND		5.0	1.7	ug/L	1
Dichlorodifluoromethane	75-71-8	8260B	ND		5.0	0.71	ug/L	1
1,1-Dichloroethane	75-34-3	8260B	ND		5.0	0.54	ug/L	1
1,2-Dichloroethane	107-06-2	8260B	ND		5.0	0.23	ug/L	1
trans-1,2-Dichloroethene	156-60-5	8260B	9.0		5.0	0.79	ug/L	1
1,1-Dichloroethene	75-35-4	8260B	2.3	J	5.0	0.94	ug/L	1
cis-1,2-Dichloroethene	156-59-2	8260B	220		5.0	0.87	ug/L	1
1,2-Dichloropropane	78-87-5	8260B	ND		5.0	0.81	ug/L	1
trans-1,3-Dichloropropene	10061-02-6	8260B	ND		5.0	1.8	ug/L	1
cis-1,3-Dichloropropene	10061-01-5	8260B	ND		5.0	0.90	ug/L	1
Ethylbenzene	100-41-4	8260B	ND		5.0	1.7	ug/L	1
2-Hexanone	591-78-6	8260B	ND		100	2.7	ug/L	1
Isopropylbenzene	98-82-8	8260B	ND		5.0	0.29	ug/L	1
Methyl acetate	79-20-9	8260B	ND		10	3.0	ug/L	1
Methyl tertiary butyl ether (MTBE)	1634-04-4	8260B	ND		5.0	0.19	ug/L	1
4-Methyl-2-pentanone	108-10-1	8260B	ND		100	3.1	ug/L	1
Methylcyclohexane	108-87-2	8260B	ND		50	9.5	ug/L	1
Methylene chloride	75-09-2	8260B	ND		5.0	1.7	ug/L	1
Styrene	100-42-5	8260B	ND		5.0	0.15	ug/L	1
1,1,2,2-Tetrachloroethane	79-34-5	8260B	ND		5.0	0.13	ug/L	1
Tetrachloroethene	127-18-4	8260B	260		5.0	0.14	ug/L	1
Toluene	108-88-3	8260B	ND		5.0	1.7	ug/L	1
1,1,2-Trichloro-1,2,2-Trifluoroethane	76-13-1	8260B	ND		5.0	3.0	ug/L	1
1,2,4-Trichlorobenzene	120-82-1	8260B	ND		5.0	1.7	ug/L	1
1,1,1-Trichloroethane	71-55-6	8260B	ND		5.0	0.29	ug/L	1
1,1,2-Trichloroethane	79-00-5	8260B	ND		5.0	0.31	ug/L	1

PQL = Practical quantitation limit
B = Detected in the method blank
E = Quantitation of compound exceeded the calibration range
ND = Not detected at or above the MDL
J = Estimated result < PQL and ≥ MDL
P = The RPD between two GC columns exceeds 40%
Where applicable, all soil sample analysis are reported on a dry weight basis unless flagged with a "W"
N = Recovery is out of criteria
H = Out of holding time

Volatile Organic Compounds by GC/MS

Client: ARCADIS U.S., Inc.
Laboratory ID: LK03046-006
Description: D-26 (33-35')
Matrix: Aqueous
Date Sampled: 11/02/2010 1336
Date Received: 11/03/2010

Run	Prep Method	Analytical Method	Dilution	Analysis Date	Analyst	Prep Date	Batch
1	5030B	8260B	10	11/05/2010 1545	DLB		45932

Parameter	CAS Number	Analytical Method	Result	Q	PQL	MDL	Units	Run
Trichloroethene	79-01-6	8260B	1100		5.0	0.24	ug/L	1
Trichlorofluoromethane	75-69-4	8260B	ND		5.0	0.51	ug/L	1
Vinyl chloride	75-01-4	8260B	ND		5.0	0.65	ug/L	1
Xylenes (total)	1330-20-7	8260B	ND		5.0	1.7	ug/L	1

Surrogate	Q	Run 1 % Recovery	Acceptance Limits
1,2-Dichloroethane-d4		101	70-130
Bromofluorobenzene		87	70-130
Toluene-d8		103	70-130

PQL = Practical quantitation limit
B = Detected in the method blank
E = Quantitation of compound exceeded the calibration range
ND = Not detected at or above the MDL
J = Estimated result < PQL and ≥ MDL
P = The RPD between two GC columns exceeds 40%
Where applicable, all soil sample analysis are reported on a dry weight basis unless flagged with a "W"
N = Recovery is out of criteria
H = Out of holding time

Volatile Organic Compounds by GC/MS

Client: ARCADIS U.S., Inc.
Laboratory ID: LK03046-007
Description: Trip Blank
Matrix: Aqueous
Date Sampled: 11/03/2010 0900
Date Received: 11/03/2010

Run	Prep Method	Analytical Method	Dilution	Analysis Date	Analyst	Prep Date	Batch
1	5030B	8260B	1	11/05/2010 0512	DLB		45898

Parameter	CAS Number	Analytical Method	Result	Q	PQL	MDL	Units	Run
Acetone	67-64-1	8260B	ND		10	3.3	ug/L	1
Benzene	71-43-2	8260B	ND		0.50	0.027	ug/L	1
Bromodichloromethane	75-27-4	8260B	ND		0.50	0.17	ug/L	1
Bromoform	75-25-2	8260B	ND		0.50	0.010	ug/L	1
Bromomethane (Methyl bromide)	74-83-9	8260B	ND		0.50	0.20	ug/L	1
2-Butanone (MEK)	78-93-3	8260B	ND		10	2.0	ug/L	1
Carbon disulfide	75-15-0	8260B	ND		0.50	0.097	ug/L	1
Carbon tetrachloride	56-23-5	8260B	ND		0.50	0.085	ug/L	1
Chlorobenzene	108-90-7	8260B	ND		0.50	0.17	ug/L	1
Chloroethane	75-00-3	8260B	ND		0.50	0.17	ug/L	1
Chloroform	67-66-3	8260B	ND		0.50	0.17	ug/L	1
Chloromethane (Methyl chloride)	74-87-3	8260B	ND		0.50	0.17	ug/L	1
Cyclohexane	110-82-7	8260B	ND		0.50	0.30	ug/L	1
1,2-Dibromo-3-chloropropane (DBCP)	96-12-8	8260B	ND		0.50	0.069	ug/L	1
Dibromochloromethane	124-48-1	8260B	ND		0.50	0.17	ug/L	1
1,2-Dibromoethane (EDB)	106-93-4	8260B	ND		0.50	0.061	ug/L	1
1,3-Dichlorobenzene	541-73-1	8260B	ND		0.50	0.17	ug/L	1
1,2-Dichlorobenzene	95-50-1	8260B	ND		0.50	0.17	ug/L	1
1,4-Dichlorobenzene	106-46-7	8260B	ND		0.50	0.17	ug/L	1
Dichlorodifluoromethane	75-71-8	8260B	ND		0.50	0.071	ug/L	1
1,1-Dichloroethane	75-34-3	8260B	ND		0.50	0.054	ug/L	1
1,2-Dichloroethane	107-06-2	8260B	ND		0.50	0.023	ug/L	1
trans-1,2-Dichloroethene	156-60-5	8260B	ND		0.50	0.079	ug/L	1
1,1-Dichloroethene	75-35-4	8260B	ND		0.50	0.094	ug/L	1
cis-1,2-Dichloroethene	156-59-2	8260B	ND		0.50	0.087	ug/L	1
1,2-Dichloropropane	78-87-5	8260B	ND		0.50	0.081	ug/L	1
trans-1,3-Dichloropropene	10061-02-6	8260B	ND		0.50	0.18	ug/L	1
cis-1,3-Dichloropropene	10061-01-5	8260B	ND		0.50	0.090	ug/L	1
Ethylbenzene	100-41-4	8260B	ND		0.50	0.17	ug/L	1
2-Hexanone	591-78-6	8260B	ND		10	0.27	ug/L	1
Isopropylbenzene	98-82-8	8260B	ND		0.50	0.029	ug/L	1
Methyl acetate	79-20-9	8260B	ND		1.0	0.30	ug/L	1
Methyl tertiary butyl ether (MTBE)	1634-04-4	8260B	ND		0.50	0.019	ug/L	1
4-Methyl-2-pentanone	108-10-1	8260B	ND		10	0.31	ug/L	1
Methylcyclohexane	108-87-2	8260B	ND		5.0	0.95	ug/L	1
Methylene chloride	75-09-2	8260B	ND		0.50	0.17	ug/L	1
Styrene	100-42-5	8260B	ND		0.50	0.015	ug/L	1
1,1,2,2-Tetrachloroethane	79-34-5	8260B	ND		0.50	0.013	ug/L	1
Tetrachloroethene	127-18-4	8260B	ND		0.50	0.014	ug/L	1
Toluene	108-88-3	8260B	ND		0.50	0.17	ug/L	1
1,1,2-Trichloro-1,2,2-Trifluoroethane	76-13-1	8260B	ND		0.50	0.30	ug/L	1
1,2,4-Trichlorobenzene	120-82-1	8260B	ND		0.50	0.17	ug/L	1
1,1,1-Trichloroethane	71-55-6	8260B	ND		0.50	0.029	ug/L	1
1,1,2-Trichloroethane	79-00-5	8260B	ND		0.50	0.031	ug/L	1

PQL = Practical quantitation limit
B = Detected in the method blank
E = Quantitation of compound exceeded the calibration range
ND = Not detected at or above the MDL
J = Estimated result < PQL and ≥ MDL
P = The RPD between two GC columns exceeds 40%
Where applicable, all soil sample analysis are reported on a dry weight basis unless flagged with a "W"
N = Recovery is out of criteria
H = Out of holding time

Volatile Organic Compounds by GC/MS

Client: ARCADIS U.S., Inc.
Laboratory ID: LK03046-007
Description: Trip Blank
Matrix: Aqueous
Date Sampled: 11/03/2010 0900
Date Received: 11/03/2010

Run	Prep Method	Analytical Method	Dilution	Analysis Date	Analyst	Prep Date	Batch
1	5030B	8260B	1	11/05/2010 0512	DLB		45898

Parameter	CAS Number	Analytical Method	Result	Q	PQL	MDL	Units	Run
Trichloroethene	79-01-6	8260B	ND		0.50	0.024	ug/L	1
Trichlorofluoromethane	75-69-4	8260B	ND		0.50	0.051	ug/L	1
Vinyl chloride	75-01-4	8260B	ND		0.50	0.065	ug/L	1
Xylenes (total)	1330-20-7	8260B	ND		0.50	0.17	ug/L	1

Surrogate	Q	Run 1 % Recovery	Acceptance Limits
1,2-Dichloroethane-d4		105	70-130
Bromofluorobenzene		102	70-130
Toluene-d8		109	70-130

PQL = Practical quantitation limit
B = Detected in the method blank
E = Quantitation of compound exceeded the calibration range
ND = Not detected at or above the MDL
J = Estimated result < PQL and ≥ MDL
P = The RPD between two GC columns exceeds 40%
Where applicable, all soil sample analysis are reported on a dry weight basis unless flagged with a "W"
N = Recovery is out of criteria
H = Out of holding time

QC Summary

Volatile Organic Compounds by GC/MS - MB

Sample ID: LQ45898-001
Batch: 45898
Analytical Method: 8260B

Matrix: Aqueous
Prep Method: 5030B

Parameter	Result	Q	Dil	PQL	MDL	Units	Analysis Date
Acetone	ND		1	10	3.3	ug/L	11/05/2010 0255
Benzene	ND		1	0.50	0.027	ug/L	11/05/2010 0255
Bromodichloromethane	ND		1	0.50	0.17	ug/L	11/05/2010 0255
Bromoform	ND		1	0.50	0.010	ug/L	11/05/2010 0255
Bromomethane (Methyl bromide)	ND		1	0.50	0.20	ug/L	11/05/2010 0255
2-Butanone (MEK)	ND		1	10	2.0	ug/L	11/05/2010 0255
Carbon disulfide	ND		1	0.50	0.097	ug/L	11/05/2010 0255
Carbon tetrachloride	ND		1	0.50	0.085	ug/L	11/05/2010 0255
Chlorobenzene	ND		1	0.50	0.17	ug/L	11/05/2010 0255
Chloroethane	ND		1	0.50	0.17	ug/L	11/05/2010 0255
Chloroform	ND		1	0.50	0.17	ug/L	11/05/2010 0255
Chloromethane (Methyl chloride)	ND		1	0.50	0.17	ug/L	11/05/2010 0255
Cyclohexane	ND		1	0.50	0.30	ug/L	11/05/2010 0255
1,2-Dibromo-3-chloropropane (DBCP)	ND		1	0.50	0.069	ug/L	11/05/2010 0255
Dibromochloromethane	ND		1	0.50	0.17	ug/L	11/05/2010 0255
1,2-Dibromoethane (EDB)	ND		1	0.50	0.061	ug/L	11/05/2010 0255
1,4-Dichlorobenzene	ND		1	0.50	0.17	ug/L	11/05/2010 0255
1,2-Dichlorobenzene	ND		1	0.50	0.17	ug/L	11/05/2010 0255
1,3-Dichlorobenzene	ND		1	0.50	0.17	ug/L	11/05/2010 0255
Dichlorodifluoromethane	ND		1	0.50	0.071	ug/L	11/05/2010 0255
1,2-Dichloroethane	ND		1	0.50	0.023	ug/L	11/05/2010 0255
1,1-Dichloroethane	ND		1	0.50	0.054	ug/L	11/05/2010 0255
cis-1,2-Dichloroethene	ND		1	0.50	0.087	ug/L	11/05/2010 0255
1,1-Dichloroethene	ND		1	0.50	0.094	ug/L	11/05/2010 0255
trans-1,2-Dichloroethene	ND		1	0.50	0.079	ug/L	11/05/2010 0255
1,2-Dichloropropane	ND		1	0.50	0.081	ug/L	11/05/2010 0255
cis-1,3-Dichloropropene	ND		1	0.50	0.090	ug/L	11/05/2010 0255
trans-1,3-Dichloropropene	ND		1	0.50	0.18	ug/L	11/05/2010 0255
Ethylbenzene	ND		1	0.50	0.17	ug/L	11/05/2010 0255
2-Hexanone	ND		1	10	0.27	ug/L	11/05/2010 0255
Isopropylbenzene	ND		1	0.50	0.029	ug/L	11/05/2010 0255
Methyl acetate	ND		1	1.0	0.30	ug/L	11/05/2010 0255
Methyl tertiary butyl ether (MTBE)	ND		1	0.50	0.019	ug/L	11/05/2010 0255
4-Methyl-2-pentanone	ND		1	10	0.31	ug/L	11/05/2010 0255
Methylcyclohexane	ND		1	5.0	0.95	ug/L	11/05/2010 0255
Methylene chloride	ND		1	0.50	0.17	ug/L	11/05/2010 0255
Styrene	ND		1	0.50	0.015	ug/L	11/05/2010 0255
1,1,2,2-Tetrachloroethane	ND		1	0.50	0.013	ug/L	11/05/2010 0255
Tetrachloroethene	ND		1	0.50	0.014	ug/L	11/05/2010 0255
Toluene	ND		1	0.50	0.17	ug/L	11/05/2010 0255
1,1,2-Trichloro-1,2,2-Trifluoroethane	ND		1	0.50	0.30	ug/L	11/05/2010 0255
1,2,4-Trichlorobenzene	ND		1	0.50	0.17	ug/L	11/05/2010 0255
1,1,1-Trichloroethane	ND		1	0.50	0.029	ug/L	11/05/2010 0255
1,1,2-Trichloroethane	ND		1	0.50	0.031	ug/L	11/05/2010 0255

PQL = Practical quantitation limit
ND = Not detected at or above the MDL
P = The RPD between two GC columns exceeds 40%
J = Estimated result < PQL and ≥ MDL
N - Recovery is out of criteria
+ - RPD is out of criteria

Where applicable, all soil sample analysis are reported on a dry weight basis unless flagged with a "W"

Note: Calculations are performed before rounding to avoid round-off errors in calculated results

Volatile Organic Compounds by GC/MS - MB

Sample ID: LQ45898-001
Batch: 45898
Analytical Method: 8260B

Matrix: Aqueous
Prep Method: 5030B

Parameter	Result	Q	Dil	PQL	MDL	Units	Analysis Date
Trichloroethene	ND		1	0.50	0.024	ug/L	11/05/2010 0255
Trichlorofluoromethane	ND		1	0.50	0.051	ug/L	11/05/2010 0255
Vinyl chloride	ND		1	0.50	0.065	ug/L	11/05/2010 0255
Xylenes (total)	ND		1	0.50	0.17	ug/L	11/05/2010 0255

Surrogate	Q	% Rec	Acceptance Limit
Bromofluorobenzene		97	70-130
1,2-Dichloroethane-d4		91	70-130
Toluene-d8		95	70-130

PQL = Practical quantitation limit
ND = Not detected at or above the MDL
P = The RPD between two GC columns exceeds 40%
J = Estimated result < PQL and ≥ MDL
N - Recovery is out of criteria
+ - RPD is out of criteria

Where applicable, all soil sample analysis are reported on a dry weight basis unless flagged with a "W"

Note: Calculations are performed before rounding to avoid round-off errors in calculated results

Volatile Organic Compounds by GC/MS - LCS

Sample ID: LQ45898-002
Batch: 45898
Analytical Method: 8260B

Matrix: Aqueous
Prep Method: 5030B

Parameter	Spike Amount (ug/L)	Result (ug/L)	Q	Dil	% Rec	% Rec Limit	Analysis Date
Acetone	100	110		1	106	46-153	11/05/2010 0107
Benzene	50	54		1	108	70-130	11/05/2010 0107
Bromodichloromethane	50	58		1	116	70-130	11/05/2010 0107
Bromoform	50	56		1	112	70-130	11/05/2010 0107
Bromomethane (Methyl bromide)	50	50		1	100	60-140	11/05/2010 0107
2-Butanone (MEK)	100	110		1	105	60-140	11/05/2010 0107
Carbon disulfide	50	50		1	100	60-140	11/05/2010 0107
Carbon tetrachloride	50	57		1	113	70-130	11/05/2010 0107
Chlorobenzene	50	54		1	108	70-130	11/05/2010 0107
Chloroethane	50	50		1	99	42-163	11/05/2010 0107
Chloroform	50	53		1	106	70-130	11/05/2010 0107
Chloromethane (Methyl chloride)	50	52		1	104	20-158	11/05/2010 0107
Cyclohexane	50	56		1	111	70-130	11/05/2010 0107
1,2-Dibromo-3-chloropropane (DBCP)	50	57		1	114	70-130	11/05/2010 0107
Dibromochloromethane	50	63		1	127	70-130	11/05/2010 0107
1,2-Dibromoethane (EDB)	50	56		1	112	70-130	11/05/2010 0107
1,4-Dichlorobenzene	50	54		1	109	70-130	11/05/2010 0107
1,2-Dichlorobenzene	50	55		1	110	70-130	11/05/2010 0107
1,3-Dichlorobenzene	50	55		1	110	70-130	11/05/2010 0107
Dichlorodifluoromethane	50	50		1	100	60-140	11/05/2010 0107
1,2-Dichloroethane	50	54		1	107	70-130	11/05/2010 0107
1,1-Dichloroethane	50	52		1	104	70-130	11/05/2010 0107
cis-1,2-Dichloroethene	50	52		1	104	70-130	11/05/2010 0107
1,1-Dichloroethene	50	53		1	106	70-130	11/05/2010 0107
trans-1,2-Dichloroethene	50	52		1	104	70-130	11/05/2010 0107
1,2-Dichloropropane	50	53		1	106	70-130	11/05/2010 0107
cis-1,3-Dichloropropene	50	56		1	112	70-130	11/05/2010 0107
trans-1,3-Dichloropropene	50	58		1	116	70-130	11/05/2010 0107
Ethylbenzene	50	56		1	111	70-130	11/05/2010 0107
2-Hexanone	100	110		1	115	60-140	11/05/2010 0107
Isopropylbenzene	50	60		1	120	70-130	11/05/2010 0107
Methyl acetate	50	58		1	116	15-128	11/05/2010 0107
Methyl tertiary butyl ether (MTBE)	50	54		1	107	70-130	11/05/2010 0107
4-Methyl-2-pentanone	100	110		1	112	60-140	11/05/2010 0107
Methylcyclohexane	50	56		1	112	70-130	11/05/2010 0107
Methylene chloride	50	50		1	100	70-130	11/05/2010 0107
Styrene	50	61		1	122	70-130	11/05/2010 0107
1,1,2,2-Tetrachloroethane	50	57		1	115	70-130	11/05/2010 0107
Tetrachloroethene	50	55		1	111	70-130	11/05/2010 0107
Toluene	50	54		1	108	70-130	11/05/2010 0107
1,1,2-Trichloro-1,2,2-Trifluoroethane	50	53		1	105	70-130	11/05/2010 0107
1,2,4-Trichlorobenzene	50	57		1	113	70-130	11/05/2010 0107
1,1,1-Trichloroethane	50	56		1	113	70-130	11/05/2010 0107
1,1,2-Trichloroethane	50	54		1	109	70-130	11/05/2010 0107

PQL = Practical quantitation limit
ND = Not detected at or above the MDL
P = The RPD between two GC columns exceeds 40%
J = Estimated result < PQL and ≥ MDL
N - Recovery is out of criteria
+ - RPD is out of criteria

Where applicable, all soil sample analysis are reported on a dry weight basis unless flagged with a "W"

Note: Calculations are performed before rounding to avoid round-off errors in calculated results

Volatile Organic Compounds by GC/MS - LCS

Sample ID: LQ45898-002
Batch: 45898
Analytical Method: 8260B

Matrix: Aqueous
Prep Method: 5030B

Parameter	Spike Amount (ug/L)	Result (ug/L)	Q	Dil	% Rec	% Rec Limit	Analysis Date
Trichloroethene	50	54		1	108	70-130	11/05/2010 0107
Trichlorofluoromethane	50	56		1	111	60-140	11/05/2010 0107
Vinyl chloride	50	49		1	99	60-140	11/05/2010 0107
Xylenes (total)	100	110		1	113	70-130	11/05/2010 0107

Surrogate	Q	% Rec	Acceptance Limit
Bromofluorobenzene		100	70-130
1,2-Dichloroethane-d4		91	70-130
Toluene-d8		99	70-130

PQL = Practical quantitation limit
ND = Not detected at or above the MDL
P = The RPD between two GC columns exceeds 40%
J = Estimated result < PQL and ≥ MDL
N - Recovery is out of criteria
+ - RPD is out of criteria

Where applicable, all soil sample analysis are reported on a dry weight basis unless flagged with a "W"

Note: Calculations are performed before rounding to avoid round-off errors in calculated results

Volatile Organic Compounds by GC/MS - LCSD

Sample ID: LQ45898-003
Batch: 45898
Analytical Method: 8260B

Matrix: Aqueous
Prep Method: 5030B

Parameter	Spike Amount (ug/L)	Result (ug/L)	Q	Dil	% Rec	% RPD	% Rec Limit	% RPD Limit	Analysis Date
Acetone	100	100		1	102	4.4	46-153	20	11/05/2010 0129
Benzene	50	54		1	108	0.49	70-130	20	11/05/2010 0129
Bromodichloromethane	50	58		1	116	0.23	70-130	20	11/05/2010 0129
Bromoform	50	56		1	113	0.16	70-130	20	11/05/2010 0129
Bromomethane (Methyl bromide)	50	51		1	102	1.4	60-140	20	11/05/2010 0129
2-Butanone (MEK)	100	110		1	105	0.12	60-140	20	11/05/2010 0129
Carbon disulfide	50	51		1	101	0.94	60-140	20	11/05/2010 0129
Carbon tetrachloride	50	58		1	116	2.6	70-130	20	11/05/2010 0129
Chlorobenzene	50	54		1	108	0.49	70-130	20	11/05/2010 0129
Chloroethane	50	51		1	101	2.0	42-163	20	11/05/2010 0129
Chloroform	50	53		1	106	0.14	70-130	20	11/05/2010 0129
Chloromethane (Methyl chloride)	50	56		1	111	6.3	20-158	20	11/05/2010 0129
Cyclohexane	50	56		1	113	1.7	70-130	20	11/05/2010 0129
1,2-Dibromo-3-chloropropane (DBCP)	50	57		1	114	0.34	70-130	20	11/05/2010 0129
Dibromochloromethane	50	64		1	128	0.88	70-130	20	11/05/2010 0129
1,2-Dibromoethane (EDB)	50	56		1	111	0.35	70-130	20	11/05/2010 0129
1,4-Dichlorobenzene	50	54		1	108	0.62	70-130	20	11/05/2010 0129
1,2-Dichlorobenzene	50	55		1	110	0.15	70-130	20	11/05/2010 0129
1,3-Dichlorobenzene	50	55		1	110	0.62	70-130	20	11/05/2010 0129
Dichlorodifluoromethane	50	51		1	101	1.2	60-140	20	11/05/2010 0129
1,2-Dichloroethane	50	54		1	108	0.28	70-130	20	11/05/2010 0129
1,1-Dichloroethane	50	52		1	104	0.056	70-130	20	11/05/2010 0129
cis-1,2-Dichloroethene	50	52		1	104	0.27	70-130	20	11/05/2010 0129
1,1-Dichloroethene	50	53		1	106	0.10	70-130	20	11/05/2010 0129
trans-1,2-Dichloroethene	50	53		1	105	0.97	70-130	20	11/05/2010 0129
1,2-Dichloropropane	50	53		1	106	0.092	70-130	20	11/05/2010 0129
cis-1,3-Dichloropropene	50	57		1	114	1.7	70-130	20	11/05/2010 0129
trans-1,3-Dichloropropene	50	58		1	116	0.28	70-130	20	11/05/2010 0129
Ethylbenzene	50	56		1	112	0.34	70-130	20	11/05/2010 0129
2-Hexanone	100	110		1	115	0.097	60-140	20	11/05/2010 0129
Isopropylbenzene	50	60		1	121	0.82	70-130	20	11/05/2010 0129
Methyl acetate	50	59		1	117	0.75	15-128	20	11/05/2010 0129
Methyl tertiary butyl ether (MTBE)	50	54		1	108	1.1	70-130	20	11/05/2010 0129
4-Methyl-2-pentanone	100	110		1	114	1.4	60-140	20	11/05/2010 0129
Methylcyclohexane	50	56		1	111	0.24	70-130	20	11/05/2010 0129
Methylene chloride	50	50		1	100	0.63	70-130	20	11/05/2010 0129
Styrene	50	61		1	123	0.060	70-130	20	11/05/2010 0129
1,1,2,2-Tetrachloroethane	50	57		1	114	0.73	70-130	20	11/05/2010 0129
Tetrachloroethene	50	55		1	111	0.15	70-130	20	11/05/2010 0129
Toluene	50	54		1	108	0.24	70-130	20	11/05/2010 0129
1,1,2-Trichloro-1,2,2-Trifluoroethane	50	53		1	106	0.85	70-130	20	11/05/2010 0129
1,2,4-Trichlorobenzene	50	56		1	113	0.26	70-130	20	11/05/2010 0129
1,1,1-Trichloroethane	50	57		1	115	1.5	70-130	20	11/05/2010 0129
1,1,2-Trichloroethane	50	54		1	108	0.94	70-130	20	11/05/2010 0129

PQL = Practical quantitation limit
ND = Not detected at or above the MDL
P = The RPD between two GC columns exceeds 40%
J = Estimated result < PQL and ≥ MDL
N - Recovery is out of criteria
+ - RPD is out of criteria

Where applicable, all soil sample analysis are reported on a dry weight basis unless flagged with a "W"

Note: Calculations are performed before rounding to avoid round-off errors in calculated results

Volatile Organic Compounds by GC/MS - LCSD

Sample ID: LQ45898-003
Batch: 45898
Analytical Method: 8260B

Matrix: Aqueous
Prep Method: 5030B

Parameter	Spike Amount (ug/L)	Result (ug/L)	Q	Dil	% Rec	% RPD	% Rec Limit	% RPD Limit	Analysis Date
Trichloroethene	50	55		1	110	1.7	70-130	20	11/05/2010 0129
Trichlorofluoromethane	50	56		1	113	1.3	60-140	20	11/05/2010 0129
Vinyl chloride	50	52		1	103	4.4	60-140	20	11/05/2010 0129
Xylenes (total)	100	110		1	113	0.045	70-130	20	11/05/2010 0129

Surrogate	Q	% Rec	Acceptance Limit
Bromofluorobenzene		100	70-130
1,2-Dichloroethane-d4		91	70-130
Toluene-d8		99	70-130

PQL = Practical quantitation limit
ND = Not detected at or above the MDL
P = The RPD between two GC columns exceeds 40%
J = Estimated result < PQL and ≥ MDL
N - Recovery is out of criteria
+ - RPD is out of criteria

Where applicable, all soil sample analysis are reported on a dry weight basis unless flagged with a "W"

Note: Calculations are performed before rounding to avoid round-off errors in calculated results

Volatile Organic Compounds by GC/MS - MB

Sample ID: LQ45932-001
Batch: 45932
Analytical Method: 8260B

Matrix: Aqueous
Prep Method: 5030B

Parameter	Result	Q	Dil	PQL	MDL	Units	Analysis Date
Acetone	ND		1	10	3.3	ug/L	11/05/2010 1258
Benzene	ND		1	0.50	0.027	ug/L	11/05/2010 1258
Bromodichloromethane	ND		1	0.50	0.17	ug/L	11/05/2010 1258
Bromoform	ND		1	0.50	0.010	ug/L	11/05/2010 1258
Bromomethane (Methyl bromide)	ND		1	0.50	0.20	ug/L	11/05/2010 1258
2-Butanone (MEK)	ND		1	10	2.0	ug/L	11/05/2010 1258
Carbon disulfide	ND		1	0.50	0.097	ug/L	11/05/2010 1258
Carbon tetrachloride	ND		1	0.50	0.085	ug/L	11/05/2010 1258
Chlorobenzene	ND		1	0.50	0.17	ug/L	11/05/2010 1258
Chloroethane	ND		1	0.50	0.17	ug/L	11/05/2010 1258
Chloroform	ND		1	0.50	0.17	ug/L	11/05/2010 1258
Chloromethane (Methyl chloride)	ND		1	0.50	0.17	ug/L	11/05/2010 1258
Cyclohexane	ND		1	0.50	0.30	ug/L	11/05/2010 1258
1,2-Dibromo-3-chloropropane (DBCP)	ND		1	0.50	0.069	ug/L	11/05/2010 1258
Dibromochloromethane	ND		1	0.50	0.17	ug/L	11/05/2010 1258
1,2-Dibromoethane (EDB)	ND		1	0.50	0.061	ug/L	11/05/2010 1258
1,4-Dichlorobenzene	ND		1	0.50	0.17	ug/L	11/05/2010 1258
1,2-Dichlorobenzene	ND		1	0.50	0.17	ug/L	11/05/2010 1258
1,3-Dichlorobenzene	ND		1	0.50	0.17	ug/L	11/05/2010 1258
Dichlorodifluoromethane	ND		1	0.50	0.071	ug/L	11/05/2010 1258
1,2-Dichloroethane	ND		1	0.50	0.023	ug/L	11/05/2010 1258
1,1-Dichloroethane	ND		1	0.50	0.054	ug/L	11/05/2010 1258
cis-1,2-Dichloroethene	ND		1	0.50	0.087	ug/L	11/05/2010 1258
trans-1,2-Dichloroethene	ND		1	0.50	0.079	ug/L	11/05/2010 1258
1,1-Dichloroethene	ND		1	0.50	0.094	ug/L	11/05/2010 1258
1,2-Dichloropropane	ND		1	0.50	0.081	ug/L	11/05/2010 1258
cis-1,3-Dichloropropene	ND		1	0.50	0.090	ug/L	11/05/2010 1258
trans-1,3-Dichloropropene	ND		1	0.50	0.18	ug/L	11/05/2010 1258
Ethylbenzene	ND		1	0.50	0.17	ug/L	11/05/2010 1258
2-Hexanone	ND		1	10	0.27	ug/L	11/05/2010 1258
Isopropylbenzene	ND		1	0.50	0.029	ug/L	11/05/2010 1258
Methyl acetate	ND		1	1.0	0.30	ug/L	11/05/2010 1258
Methyl tertiary butyl ether (MTBE)	ND		1	0.50	0.019	ug/L	11/05/2010 1258
4-Methyl-2-pentanone	ND		1	10	0.31	ug/L	11/05/2010 1258
Methylcyclohexane	ND		1	5.0	0.95	ug/L	11/05/2010 1258
Methylene chloride	ND		1	0.50	0.17	ug/L	11/05/2010 1258
Styrene	ND		1	0.50	0.015	ug/L	11/05/2010 1258
1,1,2,2-Tetrachloroethane	ND		1	0.50	0.013	ug/L	11/05/2010 1258
Tetrachloroethene	ND		1	0.50	0.014	ug/L	11/05/2010 1258
Toluene	ND		1	0.50	0.17	ug/L	11/05/2010 1258
1,1,2-Trichloro-1,2,2-Trifluoroethane	ND		1	0.50	0.30	ug/L	11/05/2010 1258
1,2,4-Trichlorobenzene	ND		1	0.50	0.17	ug/L	11/05/2010 1258
1,1,2-Trichloroethane	ND		1	0.50	0.031	ug/L	11/05/2010 1258
1,1,1-Trichloroethane	ND		1	0.50	0.029	ug/L	11/05/2010 1258

PQL = Practical quantitation limit
ND = Not detected at or above the MDL
P = The RPD between two GC columns exceeds 40%
J = Estimated result < PQL and ≥ MDL
N - Recovery is out of criteria
+ - RPD is out of criteria

Where applicable, all soil sample analysis are reported on a dry weight basis unless flagged with a "W"

Note: Calculations are performed before rounding to avoid round-off errors in calculated results

Volatile Organic Compounds by GC/MS - MB

Sample ID: LQ45932-001
Batch: 45932
Analytical Method: 8260B

Matrix: Aqueous
Prep Method: 5030B

Parameter	Result	Q	Dil	PQL	MDL	Units	Analysis Date
Trichloroethene	ND		1	0.50	0.024	ug/L	11/05/2010 1258
Trichlorofluoromethane	ND		1	0.50	0.051	ug/L	11/05/2010 1258
Vinyl chloride	ND		1	0.50	0.065	ug/L	11/05/2010 1258
Xylenes (total)	ND		1	0.50	0.17	ug/L	11/05/2010 1258

Surrogate	Q	% Rec	Acceptance Limit
Bromofluorobenzene		94	70-130
1,2-Dichloroethane-d4		97	70-130
Toluene-d8		102	70-130

PQL = Practical quantitation limit
ND = Not detected at or above the MDL
P = The RPD between two GC columns exceeds 40%
J = Estimated result < PQL and ≥ MDL
N - Recovery is out of criteria
+ - RPD is out of criteria

Where applicable, all soil sample analysis are reported on a dry weight basis unless flagged with a "W"

Note: Calculations are performed before rounding to avoid round-off errors in calculated results

Volatile Organic Compounds by GC/MS - LCS

Sample ID: LQ45932-002
Batch: 45932
Analytical Method: 8260B

Matrix: Aqueous
Prep Method: 5030B

Parameter	Spike Amount (ug/L)	Result (ug/L)	Q	Dil	% Rec	% Rec Limit	Analysis Date
Acetone	100	130		1	125	46-153	11/05/2010 1131
Benzene	50	56		1	112	70-130	11/05/2010 1131
Bromodichloromethane	50	59		1	118	70-130	11/05/2010 1131
Bromoform	50	55		1	111	70-130	11/05/2010 1131
Bromomethane (Methyl bromide)	50	58		1	117	60-140	11/05/2010 1131
2-Butanone (MEK)	100	130		1	130	60-140	11/05/2010 1131
Carbon disulfide	50	49		1	99	60-140	11/05/2010 1131
Carbon tetrachloride	50	53		1	105	70-130	11/05/2010 1131
Chlorobenzene	50	55		1	109	70-130	11/05/2010 1131
Chloroethane	50	53		1	106	42-163	11/05/2010 1131
Chloroform	50	55		1	111	70-130	11/05/2010 1131
Chloromethane (Methyl chloride)	50	51		1	102	20-158	11/05/2010 1131
Cyclohexane	50	51		1	102	70-130	11/05/2010 1131
1,2-Dibromo-3-chloropropane (DBCP)	50	60		1	119	70-130	11/05/2010 1131
Dibromochloromethane	50	64		1	127	70-130	11/05/2010 1131
1,2-Dibromoethane (EDB)	50	59		1	119	70-130	11/05/2010 1131
1,4-Dichlorobenzene	50	53		1	106	70-130	11/05/2010 1131
1,2-Dichlorobenzene	50	55		1	110	70-130	11/05/2010 1131
1,3-Dichlorobenzene	50	54		1	108	70-130	11/05/2010 1131
Dichlorodifluoromethane	50	47		1	94	60-140	11/05/2010 1131
1,2-Dichloroethane	50	57		1	114	70-130	11/05/2010 1131
1,1-Dichloroethane	50	56		1	111	70-130	11/05/2010 1131
cis-1,2-Dichloroethene	50	55		1	110	70-130	11/05/2010 1131
trans-1,2-Dichloroethene	50	54		1	108	70-130	11/05/2010 1131
1,1-Dichloroethene	50	52		1	104	70-130	11/05/2010 1131
1,2-Dichloropropane	50	58		1	116	70-130	11/05/2010 1131
cis-1,3-Dichloropropene	50	58		1	117	70-130	11/05/2010 1131
trans-1,3-Dichloropropene	50	59		1	118	70-130	11/05/2010 1131
Ethylbenzene	50	55		1	110	70-130	11/05/2010 1131
2-Hexanone	100	120		1	124	60-140	11/05/2010 1131
Isopropylbenzene	50	57		1	113	70-130	11/05/2010 1131
Methyl acetate	50	67	N	1	133	15-128	11/05/2010 1131
Methyl tertiary butyl ether (MTBE)	50	59		1	117	70-130	11/05/2010 1131
4-Methyl-2-pentanone	100	130		1	126	60-140	11/05/2010 1131
Methylcyclohexane	50	52		1	105	70-130	11/05/2010 1131
Methylene chloride	50	54		1	108	70-130	11/05/2010 1131
Styrene	50	62		1	124	70-130	11/05/2010 1131
1,1,2,2-Tetrachloroethane	50	63		1	125	70-130	11/05/2010 1131
Tetrachloroethene	50	52		1	105	70-130	11/05/2010 1131
Toluene	50	55		1	111	70-130	11/05/2010 1131
1,1,2-Trichloro-1,2,2-Trifluoroethane	50	49		1	99	70-130	11/05/2010 1131
1,2,4-Trichlorobenzene	50	55		1	110	70-130	11/05/2010 1131
1,1,2-Trichloroethane	50	57		1	114	70-130	11/05/2010 1131
1,1,1-Trichloroethane	50	53		1	107	70-130	11/05/2010 1131

PQL = Practical quantitation limit
ND = Not detected at or above the MDL
P = The RPD between two GC columns exceeds 40%
J = Estimated result < PQL and ≥ MDL
N - Recovery is out of criteria
+ - RPD is out of criteria

Where applicable, all soil sample analysis are reported on a dry weight basis unless flagged with a "W"

Note: Calculations are performed before rounding to avoid round-off errors in calculated results

Volatile Organic Compounds by GC/MS - LCS

Sample ID: LQ45932-002
Batch: 45932
Analytical Method: 8260B

Matrix: Aqueous
Prep Method: 5030B

Parameter	Spike Amount (ug/L)	Result (ug/L)	Q	Dil	% Rec	% Rec Limit	Analysis Date
Trichloroethene	50	55		1	110	70-130	11/05/2010 1131
Trichlorofluoromethane	50	49		1	99	60-140	11/05/2010 1131
Vinyl chloride	50	53		1	105	60-140	11/05/2010 1131
Xylenes (total)	100	110		1	113	70-130	11/05/2010 1131

Surrogate	Q	% Rec	Acceptance Limit
Bromofluorobenzene		95	70-130
1,2-Dichloroethane-d4		98	70-130
Toluene-d8		106	70-130

PQL = Practical quantitation limit
ND = Not detected at or above the MDL
P = The RPD between two GC columns exceeds 40%
J = Estimated result < PQL and ≥ MDL
N - Recovery is out of criteria
+ - RPD is out of criteria

Where applicable, all soil sample analysis are reported on a dry weight basis unless flagged with a "W"

Note: Calculations are performed before rounding to avoid round-off errors in calculated results

Volatile Organic Compounds by GC/MS - LCSD

Sample ID: LQ45932-003
Batch: 45932
Analytical Method: 8260B

Matrix: Aqueous
Prep Method: 5030B

Parameter	Spike Amount (ug/L)	Result (ug/L)	Q	Dil	% Rec	% RPD	% Rec Limit	% RPD Limit	Analysis Date
Acetone	100	100		1	102	20	46-153	20	11/05/2010 1153
Benzene	50	50		1	100	11	70-130	20	11/05/2010 1153
Bromodichloromethane	50	53		1	106	11	70-130	20	11/05/2010 1153
Bromoform	50	48		1	96	14	70-130	20	11/05/2010 1153
Bromomethane (Methyl bromide)	50	45	+	1	90	26	60-140	20	11/05/2010 1153
2-Butanone (MEK)	100	110		1	106	20	60-140	20	11/05/2010 1153
Carbon disulfide	50	43		1	87	13	60-140	20	11/05/2010 1153
Carbon tetrachloride	50	47		1	95	10	70-130	20	11/05/2010 1153
Chlorobenzene	50	49		1	98	10	70-130	20	11/05/2010 1153
Chloroethane	50	45		1	91	16	42-163	20	11/05/2010 1153
Chloroform	50	49		1	98	12	70-130	20	11/05/2010 1153
Chloromethane (Methyl chloride)	50	44		1	89	14	20-158	20	11/05/2010 1153
Cyclohexane	50	46		1	91	12	70-130	20	11/05/2010 1153
1,2-Dibromo-3-chloropropane (DBCP)	50	51		1	103	15	70-130	20	11/05/2010 1153
Dibromochloromethane	50	57		1	113	11	70-130	20	11/05/2010 1153
1,2-Dibromoethane (EDB)	50	51		1	103	15	70-130	20	11/05/2010 1153
1,4-Dichlorobenzene	50	49		1	98	7.9	70-130	20	11/05/2010 1153
1,2-Dichlorobenzene	50	51		1	102	8.1	70-130	20	11/05/2010 1153
1,3-Dichlorobenzene	50	49		1	99	8.6	70-130	20	11/05/2010 1153
Dichlorodifluoromethane	50	40		1	81	15	60-140	20	11/05/2010 1153
1,2-Dichloroethane	50	50		1	100	13	70-130	20	11/05/2010 1153
1,1-Dichloroethane	50	49		1	97	13	70-130	20	11/05/2010 1153
cis-1,2-Dichloroethene	50	49		1	98	12	70-130	20	11/05/2010 1153
trans-1,2-Dichloroethene	50	48		1	96	11	70-130	20	11/05/2010 1153
1,1-Dichloroethene	50	45		1	91	13	70-130	20	11/05/2010 1153
1,2-Dichloropropane	50	50		1	100	14	70-130	20	11/05/2010 1153
cis-1,3-Dichloropropene	50	52		1	104	12	70-130	20	11/05/2010 1153
trans-1,3-Dichloropropene	50	52		1	103	13	70-130	20	11/05/2010 1153
Ethylbenzene	50	50		1	99	10	70-130	20	11/05/2010 1153
2-Hexanone	100	110		1	105	16	60-140	20	11/05/2010 1153
Isopropylbenzene	50	52		1	105	7.6	70-130	20	11/05/2010 1153
Methyl acetate	50	54	+	1	108	22	15-128	20	11/05/2010 1153
Methyl tertiary butyl ether (MTBE)	50	51		1	101	14	70-130	20	11/05/2010 1153
4-Methyl-2-pentanone	100	110		1	106	18	60-140	20	11/05/2010 1153
Methylcyclohexane	50	47		1	95	10	70-130	20	11/05/2010 1153
Methylene chloride	50	47		1	95	13	70-130	20	11/05/2010 1153
Styrene	50	56		1	112	10	70-130	20	11/05/2010 1153
1,1,2,2-Tetrachloroethane	50	55		1	109	13	70-130	20	11/05/2010 1153
Tetrachloroethene	50	47		1	95	10	70-130	20	11/05/2010 1153
Toluene	50	50		1	100	10	70-130	20	11/05/2010 1153
1,1,2-Trichloro-1,2,2-Trifluoroethane	50	44		1	88	11	70-130	20	11/05/2010 1153
1,2,4-Trichlorobenzene	50	51		1	101	8.4	70-130	20	11/05/2010 1153
1,1,2-Trichloroethane	50	50		1	101	12	70-130	20	11/05/2010 1153
1,1,1-Trichloroethane	50	49		1	97	9.2	70-130	20	11/05/2010 1153

PQL = Practical quantitation limit
ND = Not detected at or above the MDL
P = The RPD between two GC columns exceeds 40%
J = Estimated result < PQL and ≥ MDL
N - Recovery is out of criteria
+ - RPD is out of criteria

Where applicable, all soil sample analysis are reported on a dry weight basis unless flagged with a "W"

Note: Calculations are performed before rounding to avoid round-off errors in calculated results

Volatile Organic Compounds by GC/MS - LCSD

Sample ID: LQ45932-003
Batch: 45932
Analytical Method: 8260B

Matrix: Aqueous
Prep Method: 5030B

Parameter	Spike Amount (ug/L)	Result (ug/L)	Q	Dil	% Rec	% RPD	% Rec Limit	% RPD Limit	Analysis Date
Trichloroethene	50	49		1	98	11	70-130	20	11/05/2010 1153
Trichlorofluoromethane	50	44		1	87	12	60-140	20	11/05/2010 1153
Vinyl chloride	50	43	+	1	85	21	60-140	20	11/05/2010 1153
Xylenes (total)	100	100		1	102	10	70-130	20	11/05/2010 1153

Surrogate	Q	% Rec	Acceptance Limit
Bromofluorobenzene		96	70-130
1,2-Dichloroethane-d4		95	70-130
Toluene-d8		105	70-130

PQL = Practical quantitation limit
ND = Not detected at or above the MDL
P = The RPD between two GC columns exceeds 40%
J = Estimated result < PQL and ≥ MDL
N - Recovery is out of criteria
+ - RPD is out of criteria

Where applicable, all soil sample analysis are reported on a dry weight basis unless flagged with a "W"

Note: Calculations are performed before rounding to avoid round-off errors in calculated results

SHEALY **Chain of Custody Record**

SHEALY ENVIRONMENTAL SERVICES, INC.
106 Vantage Point Drive
West Columbia, South Carolina 29172
Telephone No. (803) 791-9700 Fax No. (803) 791-9111

Number 107606

ARCADIS

Client: 801 Corporate Center Drive Suite 300	Report to Contact: SHELLEY GIBBONS	Telephone No. / Fax No. / E-mail: shelley.gibbons@arcadis-us.com 919-854-1282/919-854-5448	Quote No.
Address: RALEIGH	Sampler's Signature: x CHARLES LAWSON	Waybill No.: FED-EX # 8730 0304 5480	Page ___ of ___
City: / State: NC / Zip Code: 27607	Printed Name: CB Lawson	Analysis (Attach list if more space is needed.)	
Project Name: FORT STEWART FST-39			
Project No.: GP09HAFS, F39A, D60FI	P.O. No.:		Lot No.: LK03046

Sample ID / Description (Containers for each sample may be combined on one line.)	Date	Time	G=Grab C=Composite	Matrix: Aqueous	Matrix: Solid	Matrix: Non-Aqueous	No. of Containers by Preservative Type: Unpres	H2SO4	HNO3	HCl	NaOH	5035 Kit	8260B VOC 40ml HCl	Remarks / Cooler I.D.
B-2 (30-34')	11/2/2010	8:43	G	X						3			X	
B-2 (36-40')	11/2/2010	9:24	G	X						3			X	
B-2 (42-46')	11/2/2010	10:45	G	X						3			X	
D-25 (30-34')	11/2/2010	14:21	G	X						3			X	
D-25 (36-40')	11/2/2010	15:38	G	X						3			X	
~~D-25 (42-46')~~			~~G~~	~~X~~						~~3~~			~~X~~	
D-26 (33-35')	11/2/2010	13:36	G	X						3			X	
TRIP BLANK										2			X	

Possible Hazard Identification: [X] Non-Hazard [ ] Flammable [ ] Skin Irritant [ ] Poison [ ] Unknown

Sample Disposal: [ ] Return to Client [X] Disposal by Lab

Note: All samples are retained for six weeks from receipt unless other arrangements are made.

Turn Around Time Required (Prior lab approval required for expedited TAT.): [ ] Standard [X] Rush (Specify) 24 HR TAT

QC Requirements (Specify):

	Date	Time		Date	Time
1. Relinquished by: CB Lawson	11/2/2010	16:15	1. Received by:		
2. Relinquished by:			2. Received by:		
3. Relinquished by: FedEx	11/3/10	0900	3. Laboratory received by: [signature]	11/3/10	0900

Comments:

LAB USE ONLY
Received on ice (Circle) ~~Yes~~ No ice Pack

Receipt Temp. 4.4 °C

DISTRIBUTION: WHITE & YELLOW-Return to laboratory with Sample(s); PINK-Field/Client Copy

Document Number: F-AD-012 Effective Date: 08-04-02

Shealy Environmental Services, Inc.
Document Number: F-AD-016
Revision Number: 6

Page 1 of 1
Replaces Date: 09/22/06
Effective Date: 05/29/07

Sample Receipt Checklist (SRC)

Client: Arcadis Cooler Inspected by/date: WBC / 11/3/10 Lot #: LK03046

Means of receipt: ☐ SESI ☐ Client ☐ UPS ☑ FedEx ☐ Airborne Exp ☐ Other

Yes ☐	No ☑	NA ☐	1. Were custody seals present on the cooler?
Yes ☐	No ☐	NA ☑	2. If custody seals were present, were they intact and unbroken?

Cooler ID/temperature upon receipt 4.4 °C / °C / °C / °C / °C / °C / °C / °C

Method: ☐ Temperature Blank ☑ Against Bottles
Method of coolant: ☑ Wet Ice ☐ Blue Ice ☐ Dry Ice ☐ None

If response is No (or Yes for 14, 15, 16), an explanation/resolution must be provided.

Yes ☐	No ☐	NA ☑	3. If temperature of any cooler exceeded 6.0°C, was Project Manager notified? PM notified by SRC, phone, note (circle one), other:_____. (For coolers received via commercial courier, PMs are to be notified immediately.
Yes ☑	No ☐	NA ☐	4. Is the commercial courier's packing slip attached to this form?
Yes ☐	No ☑	NA ☐	5. Were proper custody procedures (relinquished/received) followed?
Yes ☑	No ☐	NA ☐	6. Were sample IDs listed?
Yes ☑	No ☐	NA ☐	7. Was collection date & time listed?
Yes ☑	No ☐	NA ☐	8. Were tests to be performed listed on the COC or was quote # provided?
Yes ☑	No ☐	NA ☐	9. Did all samples arrive in the proper containers for each test?
Yes ☑	No ☐	NA ☐	10. Did all container label information (ID, date, time) agree with COC?
Yes ☑	No ☑	NA ☐	11. Did all containers arrive in good condition (unbroken, lids on, etc.)? -001 (1) Broken
Yes ☑	No ☐	NA ☐	12. Was adequate sample volume available?
Yes ☑	No ☐	NA ☐	13. Were all samples received within ½ the holding time or 48 hours, whichever comes first?
Yes ☐	No ☑	NA ☐	14. Were any samples containers missing?
Yes ☐	No ☑	NA ☐	15. Were there any excess samples not listed on COC?
Yes ☑	No ☐	NA ☐	16. Were bubbles present >"pea-size" (¼"or 6mm in diameter) in any VOA vials?
Yes ☐	No ☐	NA ☑	17. Were all metals/O&G/HEM/nutrient samples received at a pH of <2?
Yes ☐	No ☐	NA ☑	18. Were all cyanide and/or sulfide samples received at a pH >12?
Yes ☐	No ☐	NA ☑	19. Were all applicable NH3/TKN/cyanide/phenol/BNA/pest/PCB/herb (<0.2mg/L) and toxicity (<0.1mg/L) samples free of residual chlorine?
Yes ☐	No ☑	NA ☐	20. Were collection temperatures documented on the COC for NC samples?

NPW 11/3/10

Sample Preservation (Must be completed for any sample(s) incorrectly preserved or with headspace.)

Sample(s) _____ were received incorrectly preserved and were adjusted accordingly in sample receiving with _____ (H_2SO_4,HNO_3,HCl,NaOH) with the SR # (number) _____.

Sample(s) -001(1), -003(3), -005(3), -006(1) were received with bubbles >6 mm in diameter.

Sample(s) _____ were received with TRC >0.2 mg/L for NH3/TKN/cyanide/BNA/pest/PCB/herb.

Toxicity sample(s) _____ were received with TRC >0.1 mg/L and were analyzed by method 330.5.

Corrective Action taken, if necessary:
Was client notified: Yes ☐ No ☐
SESI employee: _____
Comments: _____

This portion can be removed for Recipient's records.
Date 11/2/2010 FedEx Tracking Number 873003045480
Recipient's Name CHARLES WATSON Phone 706 828-4421
Company ARCADIS
Address 1450 GREENE ST STE 220
Dept./Floor/Suite/Room
City AUGUSTA State GA ZIP 30901-5201
Your Internal Billing Reference

Report of Analysis

ARCADIS U.S., Inc.
30 Patewood Drive
Suite 155
Greenville, SC 29615
Attention: Allison Fang

Project Name: Hunter Stewart F-39A

Project Number: GP08HAFS.F39A.DGOFI

Lot Number: LK11004

Date Completed: 11/14/2010

Nisreen Saikaly
Project Manager

This report shall not be reproduced, except in its entirety, without the written approval of Shealy Environmental Services, Inc.

The following non-paginated documents are considered part of this report: Chain of Custody Record and Sample Receipt Checklist.

* L K 1 1 0 0 4 *

Case Narrative
ARCADIS U.S., Inc.
Lot Number: LK11004

This Report of Analysis contains the analytical result(s) for the sample(s) listed on the Sample Summary following this Case Narrative. The sample receiving date is documented in the header information associated with each sample.

Sample receipt, sample analysis, and data review have been performed in accordance with the most current approved NELAC standards, the Shealy Environmental Services, Inc. ("Shealy") Quality Assurance Management Plan (QAMP), standard operating procedures (SOPs), and Shealy policies. Any exceptions to the NELAC standards, the QAMP, SOPs or policies are qualified on the results page or discussed below.

If you have any questions regarding this report please contact the Shealy Project Manager listed on the cover page.

Volatile Organic Compounds

The RPD exceeded method control limits in batch 46389; however, all other QA/QC criteria for the LCS/LCSD were within acceptance criteria and method control limits. The associated sample results were reported and no corrective action was required.

Sample Summary

ARCADIS U.S., Inc.

Lot Number: LK11004

Sample Number	Sample ID	Matrix	Date Sampled	Date Received
001	E-8 (30-34)	Aqueous	11/09/2010 1350	11/11/2010
002	E-8 (36-40)	Aqueous	11/09/2010 1420	11/11/2010
003	E-8 (42-46)	Aqueous	11/09/2010 1500	11/11/2010
004	B-6 (30-34)	Aqueous	11/09/2010 1630	11/11/2010
005	B-6 (36-40)	Aqueous	11/09/2010 1655	11/11/2010
006	E-9 (30-34)	Aqueous	11/10/2010 0930	11/11/2010
007	E-9 (36-40)	Aqueous	11/10/2010 1010	11/11/2010
008	E-9 (42-46)	Aqueous	11/10/2010 1040	11/11/2010
009	E-10 (30-34)	Aqueous	11/10/2010 1215	11/11/2010
010	Trip Blank	Aqueous	11/10/2010	11/11/2010
011	E-10 (36-40)	Aqueous	11/10/2010 1245	11/11/2010
012	E-10 (42-46)	Aqueous	11/10/2010 1315	11/11/2010

(12 samples)

Executive Summary
ARCADIS U.S., Inc.
Lot Number: LK11004

Sample	Sample ID	Matrix	Parameter	Method	Result	Q	Units	Page
001	E-8 (30-34)	Aqueous	Acetone	8260B	21		ug/L	6
001	E-8 (30-34)	Aqueous	Benzene	8260B	0.69		ug/L	6
001	E-8 (30-34)	Aqueous	cis-1,2-Dichloroethene	8260B	3.9		ug/L	6
001	E-8 (30-34)	Aqueous	Tetrachloroethene	8260B	8.9		ug/L	6
001	E-8 (30-34)	Aqueous	Toluene	8260B	0.79		ug/L	6
001	E-8 (30-34)	Aqueous	Trichloroethene	8260B	14		ug/L	7
002	E-8 (36-40)	Aqueous	Acetone	8260B	24		ug/L	8
002	E-8 (36-40)	Aqueous	Benzene	8260B	0.41	J	ug/L	8
002	E-8 (36-40)	Aqueous	cis-1,2-Dichloroethene	8260B	0.37	J	ug/L	8
002	E-8 (36-40)	Aqueous	Tetrachloroethene	8260B	1.2		ug/L	8
002	E-8 (36-40)	Aqueous	Toluene	8260B	1.1		ug/L	8
002	E-8 (36-40)	Aqueous	Trichloroethene	8260B	1.2		ug/L	9
003	E-8 (42-46)	Aqueous	Acetone	8260B	63		ug/L	10
003	E-8 (42-46)	Aqueous	Benzene	8260B	0.55		ug/L	10
003	E-8 (42-46)	Aqueous	Chloroform	8260B	0.37	J	ug/L	10
003	E-8 (42-46)	Aqueous	cis-1,2-Dichloroethene	8260B	0.38	J	ug/L	10
003	E-8 (42-46)	Aqueous	Tetrachloroethene	8260B	1.5		ug/L	10
003	E-8 (42-46)	Aqueous	Toluene	8260B	1.1		ug/L	10
003	E-8 (42-46)	Aqueous	Trichloroethene	8260B	2.0		ug/L	11
004	B-6 (30-34)	Aqueous	Acetone	8260B	20		ug/L	12
004	B-6 (30-34)	Aqueous	Benzene	8260B	0.62		ug/L	12
004	B-6 (30-34)	Aqueous	cis-1,2-Dichloroethene	8260B	1.3		ug/L	12
004	B-6 (30-34)	Aqueous	Tetrachloroethene	8260B	19		ug/L	12
004	B-6 (30-34)	Aqueous	Toluene	8260B	1.4		ug/L	12
004	B-6 (30-34)	Aqueous	Trichloroethene	8260B	4.8		ug/L	13
005	B-6 (36-40)	Aqueous	Acetone	8260B	45		ug/L	14
005	B-6 (36-40)	Aqueous	Benzene	8260B	0.53		ug/L	14
005	B-6 (36-40)	Aqueous	2-Butanone (MEK)	8260B	11		ug/L	14
005	B-6 (36-40)	Aqueous	cis-1,2-Dichloroethene	8260B	6.2		ug/L	14
005	B-6 (36-40)	Aqueous	Methylene chloride	8260B	0.99		ug/L	14
005	B-6 (36-40)	Aqueous	Tetrachloroethene	8260B	37		ug/L	14
005	B-6 (36-40)	Aqueous	Toluene	8260B	1.2		ug/L	14
005	B-6 (36-40)	Aqueous	Trichloroethene	8260B	15		ug/L	15
006	E-9 (30-34)	Aqueous	Acetone	8260B	4.8	J	ug/L	16
006	E-9 (30-34)	Aqueous	Benzene	8260B	0.15	J	ug/L	16
006	E-9 (30-34)	Aqueous	2-Butanone (MEK)	8260B	9.7	J	ug/L	16
006	E-9 (30-34)	Aqueous	1,1-Dichloroethene	8260B	0.39	J	ug/L	16
006	E-9 (30-34)	Aqueous	cis-1,2-Dichloroethene	8260B	30		ug/L	16
006	E-9 (30-34)	Aqueous	Tetrachloroethene	8260B	95		ug/L	16
006	E-9 (30-34)	Aqueous	Toluene	8260B	0.64		ug/L	16
006	E-9 (30-34)	Aqueous	Trichloroethene	8260B	140		ug/L	17
007	E-9 (36-40)	Aqueous	Acetone	8260B	26		ug/L	18
007	E-9 (36-40)	Aqueous	Benzene	8260B	2.1		ug/L	18
007	E-9 (36-40)	Aqueous	2-Butanone (MEK)	8260B	7.6	J	ug/L	18
007	E-9 (36-40)	Aqueous	cis-1,2-Dichloroethene	8260B	3.1		ug/L	18

Executive Summary (Continued)

Lot Number: LK11004

Sample	Sample ID	Matrix	Parameter	Method	Result	Q	Units	Page
007	E-9 (36-40)	Aqueous	Ethylbenzene	8260B	0.44	J	ug/L	18
007	E-9 (36-40)	Aqueous	2-Hexanone	8260B	0.81	J	ug/L	18
007	E-9 (36-40)	Aqueous	Tetrachloroethene	8260B	1.5		ug/L	18
007	E-9 (36-40)	Aqueous	Toluene	8260B	2.0		ug/L	18
007	E-9 (36-40)	Aqueous	Trichloroethene	8260B	6.4		ug/L	19
007	E-9 (36-40)	Aqueous	Xylenes (total)	8260B	1.2		ug/L	19
008	E-9 (42-46)	Aqueous	Acetone	8260B	11		ug/L	20
008	E-9 (42-46)	Aqueous	Benzene	8260B	0.44	J	ug/L	20
008	E-9 (42-46)	Aqueous	cis-1,2-Dichloroethene	8260B	0.27	J	ug/L	20
008	E-9 (42-46)	Aqueous	2-Hexanone	8260B	0.38	J	ug/L	20
008	E-9 (42-46)	Aqueous	Tetrachloroethene	8260B	0.71		ug/L	20
008	E-9 (42-46)	Aqueous	Toluene	8260B	0.73		ug/L	20
008	E-9 (42-46)	Aqueous	Trichloroethene	8260B	0.67		ug/L	21
008	E-9 (42-46)	Aqueous	Xylenes (total)	8260B	0.59		ug/L	21
009	E-10 (30-34)	Aqueous	Acetone	8260B	8.4	J	ug/L	22
009	E-10 (30-34)	Aqueous	Benzene	8260B	0.18	J	ug/L	22
009	E-10 (30-34)	Aqueous	cis-1,2-Dichloroethene	8260B	0.44	J	ug/L	22
009	E-10 (30-34)	Aqueous	Tetrachloroethene	8260B	0.35	J	ug/L	22
009	E-10 (30-34)	Aqueous	Toluene	8260B	0.80		ug/L	22
009	E-10 (30-34)	Aqueous	Trichloroethene	8260B	1.4		ug/L	23
010	Trip Blank	Aqueous	Carbon disulfide	8260B	0.37	J	ug/L	24
010	Trip Blank	Aqueous	1,2,4-Trichlorobenzene	8260B	0.39	J	ug/L	24
011	E-10 (36-40)	Aqueous	Acetone	8260B	16		ug/L	26
011	E-10 (36-40)	Aqueous	Benzene	8260B	0.87		ug/L	26
011	E-10 (36-40)	Aqueous	2-Butanone (MEK)	8260B	3.6	J	ug/L	26
011	E-10 (36-40)	Aqueous	2-Hexanone	8260B	0.28	J	ug/L	26
011	E-10 (36-40)	Aqueous	Tetrachloroethene	8260B	0.11	J	ug/L	26
011	E-10 (36-40)	Aqueous	Toluene	8260B	1.0		ug/L	26
011	E-10 (36-40)	Aqueous	Xylenes (total)	8260B	0.75		ug/L	27
012	E-10 (42-46)	Aqueous	Acetone	8260B	16		ug/L	28
012	E-10 (42-46)	Aqueous	Benzene	8260B	0.36	J	ug/L	28
012	E-10 (42-46)	Aqueous	2-Butanone (MEK)	8260B	3.2	J	ug/L	28
012	E-10 (42-46)	Aqueous	2-Hexanone	8260B	0.41	J	ug/L	28
012	E-10 (42-46)	Aqueous	Methylene chloride	8260B	0.84		ug/L	28
012	E-10 (42-46)	Aqueous	Tetrachloroethene	8260B	0.12	J	ug/L	28
012	E-10 (42-46)	Aqueous	Toluene	8260B	0.78		ug/L	28
012	E-10 (42-46)	Aqueous	Xylenes (total)	8260B	0.61		ug/L	29

(82 detections)

Volatile Organic Compounds by GC/MS

Client: ARCADIS U.S., Inc.
Laboratory ID: LK11004-001
Description: E-8 (30-34)
Matrix: Aqueous
Date Sampled: 11/09/2010 1350
Date Received: 11/11/2010

Run	Prep Method	Analytical Method	Dilution	Analysis Date	Analyst	Prep Date	Batch
1	5030B	8260B	1	11/11/2010 1938	DLB		46389

Parameter	CAS Number	Analytical Method	Result	Q	PQL	MDL	Units	Run
Acetone	67-64-1	8260B	21		10	3.3	ug/L	1
Benzene	71-43-2	8260B	0.69		0.50	0.027	ug/L	1
Bromodichloromethane	75-27-4	8260B	ND		0.50	0.17	ug/L	1
Bromoform	75-25-2	8260B	ND		0.50	0.010	ug/L	1
Bromomethane (Methyl bromide)	74-83-9	8260B	ND		0.50	0.20	ug/L	1
2-Butanone (MEK)	78-93-3	8260B	ND		10	2.0	ug/L	1
Carbon disulfide	75-15-0	8260B	ND		0.50	0.097	ug/L	1
Carbon tetrachloride	56-23-5	8260B	ND		0.50	0.085	ug/L	1
Chlorobenzene	108-90-7	8260B	ND		0.50	0.17	ug/L	1
Chloroethane	75-00-3	8260B	ND		0.50	0.17	ug/L	1
Chloroform	67-66-3	8260B	ND		0.50	0.17	ug/L	1
Chloromethane (Methyl chloride)	74-87-3	8260B	ND		0.50	0.17	ug/L	1
Cyclohexane	110-82-7	8260B	ND		0.50	0.30	ug/L	1
1,2-Dibromo-3-chloropropane (DBCP)	96-12-8	8260B	ND		0.50	0.069	ug/L	1
Dibromochloromethane	124-48-1	8260B	ND		0.50	0.17	ug/L	1
1,2-Dibromoethane (EDB)	106-93-4	8260B	ND		0.50	0.061	ug/L	1
1,3-Dichlorobenzene	541-73-1	8260B	ND		0.50	0.17	ug/L	1
1,2-Dichlorobenzene	95-50-1	8260B	ND		0.50	0.17	ug/L	1
1,4-Dichlorobenzene	106-46-7	8260B	ND		0.50	0.17	ug/L	1
Dichlorodifluoromethane	75-71-8	8260B	ND		0.50	0.071	ug/L	1
1,1-Dichloroethane	75-34-3	8260B	ND		0.50	0.054	ug/L	1
1,2-Dichloroethane	107-06-2	8260B	ND		0.50	0.023	ug/L	1
trans-1,2-Dichloroethene	156-60-5	8260B	ND		0.50	0.079	ug/L	1
1,1-Dichloroethene	75-35-4	8260B	ND		0.50	0.094	ug/L	1
cis-1,2-Dichloroethene	156-59-2	8260B	3.9		0.50	0.087	ug/L	1
1,2-Dichloropropane	78-87-5	8260B	ND		0.50	0.081	ug/L	1
trans-1,3-Dichloropropene	10061-02-6	8260B	ND		0.50	0.18	ug/L	1
cis-1,3-Dichloropropene	10061-01-5	8260B	ND		0.50	0.090	ug/L	1
Ethylbenzene	100-41-4	8260B	ND		0.50	0.17	ug/L	1
2-Hexanone	591-78-6	8260B	ND		10	0.27	ug/L	1
Isopropylbenzene	98-82-8	8260B	ND		0.50	0.029	ug/L	1
Methyl acetate	79-20-9	8260B	ND		1.0	0.30	ug/L	1
Methyl tertiary butyl ether (MTBE)	1634-04-4	8260B	ND		0.50	0.019	ug/L	1
4-Methyl-2-pentanone	108-10-1	8260B	ND		10	0.31	ug/L	1
Methylcyclohexane	108-87-2	8260B	ND		5.0	0.95	ug/L	1
Methylene chloride	75-09-2	8260B	ND		0.50	0.17	ug/L	1
Styrene	100-42-5	8260B	ND		0.50	0.015	ug/L	1
1,1,2,2-Tetrachloroethane	79-34-5	8260B	ND		0.50	0.013	ug/L	1
Tetrachloroethene	127-18-4	8260B	8.9		0.50	0.014	ug/L	1
Toluene	108-88-3	8260B	0.79		0.50	0.17	ug/L	1
1,1,2-Trichloro-1,2,2-Trifluoroethane	76-13-1	8260B	ND		0.50	0.30	ug/L	1
1,2,4-Trichlorobenzene	120-82-1	8260B	ND		0.50	0.17	ug/L	1
1,1,1-Trichloroethane	71-55-6	8260B	ND		0.50	0.029	ug/L	1
1,1,2-Trichloroethane	79-00-5	8260B	ND		0.50	0.031	ug/L	1

PQL = Practical quantitation limit
B = Detected in the method blank
E = Quantitation of compound exceeded the calibration range
ND = Not detected at or above the MDL
J = Estimated result < PQL and ≥ MDL
P = The RPD between two GC columns exceeds 40%
Where applicable, all soil sample analysis are reported on a dry weight basis unless flagged with a "W"
N = Recovery is out of criteria
H = Out of holding time

Volatile Organic Compounds by GC/MS

Client: ARCADIS U.S., Inc.
Laboratory ID: LK11004-001
Description: E-8 (30-34)
Matrix: Aqueous
Date Sampled: 11/09/2010 1350
Date Received: 11/11/2010

Run	Prep Method	Analytical Method	Dilution	Analysis Date	Analyst	Prep Date	Batch
1	5030B	8260B	1	11/11/2010 1938	DLB		46389

Parameter	CAS Number	Analytical Method	Result	Q	PQL	MDL	Units	Run
Trichloroethene	79-01-6	8260B	14		0.50	0.024	ug/L	1
Trichlorofluoromethane	75-69-4	8260B	ND		0.50	0.051	ug/L	1
Vinyl chloride	75-01-4	8260B	ND		0.50	0.065	ug/L	1
Xylenes (total)	1330-20-7	8260B	ND		0.50	0.17	ug/L	1

Surrogate	Q	Run 1 % Recovery	Acceptance Limits
1,2-Dichloroethane-d4		98	70-130
Bromofluorobenzene		97	70-130
Toluene-d8		111	70-130

PQL = Practical quantitation limit
B = Detected in the method blank
E = Quantitation of compound exceeded the calibration range
ND = Not detected at or above the MDL
J = Estimated result < PQL and ≥ MDL
P = The RPD between two GC columns exceeds 40%
Where applicable, all soil sample analysis are reported on a dry weight basis unless flagged with a "W"
N = Recovery is out of criteria
H = Out of holding time

Volatile Organic Compounds by GC/MS

Client: ARCADIS U.S., Inc.
Laboratory ID: LK11004-002
Description: E-8 (36-40)
Matrix: Aqueous
Date Sampled: 11/09/2010 1420
Date Received: 11/11/2010

Run	Prep Method	Analytical Method	Dilution	Analysis Date	Analyst	Prep Date	Batch
1	5030B	8260B	1	11/11/2010 2001	DLB		46389

Parameter	CAS Number	Analytical Method	Result	Q	PQL	MDL	Units	Run
Acetone	67-64-1	8260B	24		10	3.3	ug/L	1
Benzene	71-43-2	8260B	0.41	J	0.50	0.027	ug/L	1
Bromodichloromethane	75-27-4	8260B	ND		0.50	0.17	ug/L	1
Bromoform	75-25-2	8260B	ND		0.50	0.010	ug/L	1
Bromomethane (Methyl bromide)	74-83-9	8260B	ND		0.50	0.20	ug/L	1
2-Butanone (MEK)	78-93-3	8260B	ND		10	2.0	ug/L	1
Carbon disulfide	75-15-0	8260B	ND		0.50	0.097	ug/L	1
Carbon tetrachloride	56-23-5	8260B	ND		0.50	0.085	ug/L	1
Chlorobenzene	108-90-7	8260B	ND		0.50	0.17	ug/L	1
Chloroethane	75-00-3	8260B	ND		0.50	0.17	ug/L	1
Chloroform	67-66-3	8260B	ND		0.50	0.17	ug/L	1
Chloromethane (Methyl chloride)	74-87-3	8260B	ND		0.50	0.17	ug/L	1
Cyclohexane	110-82-7	8260B	ND		0.50	0.30	ug/L	1
1,2-Dibromo-3-chloropropane (DBCP)	96-12-8	8260B	ND		0.50	0.069	ug/L	1
Dibromochloromethane	124-48-1	8260B	ND		0.50	0.17	ug/L	1
1,2-Dibromoethane (EDB)	106-93-4	8260B	ND		0.50	0.061	ug/L	1
1,3-Dichlorobenzene	541-73-1	8260B	ND		0.50	0.17	ug/L	1
1,2-Dichlorobenzene	95-50-1	8260B	ND		0.50	0.17	ug/L	1
1,4-Dichlorobenzene	106-46-7	8260B	ND		0.50	0.17	ug/L	1
Dichlorodifluoromethane	75-71-8	8260B	ND		0.50	0.071	ug/L	1
1,1-Dichloroethane	75-34-3	8260B	ND		0.50	0.054	ug/L	1
1,2-Dichloroethane	107-06-2	8260B	ND		0.50	0.023	ug/L	1
trans-1,2-Dichloroethene	156-60-5	8260B	ND		0.50	0.079	ug/L	1
1,1-Dichloroethene	75-35-4	8260B	ND		0.50	0.094	ug/L	1
cis-1,2-Dichloroethene	156-59-2	8260B	0.37	J	0.50	0.087	ug/L	1
1,2-Dichloropropane	78-87-5	8260B	ND		0.50	0.081	ug/L	1
trans-1,3-Dichloropropene	10061-02-6	8260B	ND		0.50	0.18	ug/L	1
cis-1,3-Dichloropropene	10061-01-5	8260B	ND		0.50	0.090	ug/L	1
Ethylbenzene	100-41-4	8260B	ND		0.50	0.17	ug/L	1
2-Hexanone	591-78-6	8260B	ND		10	0.27	ug/L	1
Isopropylbenzene	98-82-8	8260B	ND		0.50	0.029	ug/L	1
Methyl acetate	79-20-9	8260B	ND		1.0	0.30	ug/L	1
Methyl tertiary butyl ether (MTBE)	1634-04-4	8260B	ND		0.50	0.019	ug/L	1
4-Methyl-2-pentanone	108-10-1	8260B	ND		10	0.31	ug/L	1
Methylcyclohexane	108-87-2	8260B	ND		5.0	0.95	ug/L	1
Methylene chloride	75-09-2	8260B	ND		0.50	0.17	ug/L	1
Styrene	100-42-5	8260B	ND		0.50	0.015	ug/L	1
1,1,2,2-Tetrachloroethane	79-34-5	8260B	ND		0.50	0.013	ug/L	1
Tetrachloroethene	127-18-4	8260B	1.2		0.50	0.014	ug/L	1
Toluene	108-88-3	8260B	1.1		0.50	0.17	ug/L	1
1,1,2-Trichloro-1,2,2-Trifluoroethane	76-13-1	8260B	ND		0.50	0.30	ug/L	1
1,2,4-Trichlorobenzene	120-82-1	8260B	ND		0.50	0.17	ug/L	1
1,1,1-Trichloroethane	71-55-6	8260B	ND		0.50	0.029	ug/L	1
1,1,2-Trichloroethane	79-00-5	8260B	ND		0.50	0.031	ug/L	1

PQL = Practical quantitation limit
B = Detected in the method blank
E = Quantitation of compound exceeded the calibration range
ND = Not detected at or above the MDL
J = Estimated result < PQL and ≥ MDL
P = The RPD between two GC columns exceeds 40%
Where applicable, all soil sample analysis are reported on a dry weight basis unless flagged with a "W"
N = Recovery is out of criteria
H = Out of holding time

Volatile Organic Compounds by GC/MS

Client: ARCADIS U.S., Inc.
Laboratory ID: LK11004-002
Description: E-8 (36-40)
Matrix: Aqueous
Date Sampled: 11/09/2010 1420
Date Received: 11/11/2010

Run	Prep Method	Analytical Method	Dilution	Analysis Date	Analyst	Prep Date	Batch
1	5030B	8260B	1	11/11/2010 2001	DLB		46389

Parameter	CAS Number	Analytical Method	Result	Q	PQL	MDL	Units	Run
Trichloroethene	79-01-6	8260B	1.2		0.50	0.024	ug/L	1
Trichlorofluoromethane	75-69-4	8260B	ND		0.50	0.051	ug/L	1
Vinyl chloride	75-01-4	8260B	ND		0.50	0.065	ug/L	1
Xylenes (total)	1330-20-7	8260B	ND		0.50	0.17	ug/L	1

Surrogate	Q	Run 1 % Recovery	Acceptance Limits
1,2-Dichloroethane-d4		97	70-130
Bromofluorobenzene		94	70-130
Toluene-d8		108	70-130

PQL = Practical quantitation limit
B = Detected in the method blank
E = Quantitation of compound exceeded the calibration range
ND = Not detected at or above the MDL
J = Estimated result < PQL and ≥ MDL
P = The RPD between two GC columns exceeds 40%
Where applicable, all soil sample analysis are reported on a dry weight basis unless flagged with a "W"
N = Recovery is out of criteria
H = Out of holding time

Volatile Organic Compounds by GC/MS

Client: ARCADIS U.S., Inc.
Laboratory ID: LK11004-003
Description: E-8 (42-46)
Matrix: Aqueous
Date Sampled: 11/09/2010 1500
Date Received: 11/11/2010

Run	Prep Method	Analytical Method	Dilution	Analysis Date	Analyst	Prep Date	Batch
1	5030B	8260B	1	11/11/2010 2025	DLB		46389

Parameter	CAS Number	Analytical Method	Result	Q	PQL	MDL	Units	Run
Acetone	67-64-1	8260B	63		10	3.3	ug/L	1
Benzene	71-43-2	8260B	0.55		0.50	0.027	ug/L	1
Bromodichloromethane	75-27-4	8260B	ND		0.50	0.17	ug/L	1
Bromoform	75-25-2	8260B	ND		0.50	0.010	ug/L	1
Bromomethane (Methyl bromide)	74-83-9	8260B	ND		0.50	0.20	ug/L	1
2-Butanone (MEK)	78-93-3	8260B	ND		10	2.0	ug/L	1
Carbon disulfide	75-15-0	8260B	ND		0.50	0.097	ug/L	1
Carbon tetrachloride	56-23-5	8260B	ND		0.50	0.085	ug/L	1
Chlorobenzene	108-90-7	8260B	ND		0.50	0.17	ug/L	1
Chloroethane	75-00-3	8260B	ND		0.50	0.17	ug/L	1
Chloroform	67-66-3	8260B	0.37	J	0.50	0.17	ug/L	1
Chloromethane (Methyl chloride)	74-87-3	8260B	ND		0.50	0.17	ug/L	1
Cyclohexane	110-82-7	8260B	ND		0.50	0.30	ug/L	1
1,2-Dibromo-3-chloropropane (DBCP)	96-12-8	8260B	ND		0.50	0.069	ug/L	1
Dibromochloromethane	124-48-1	8260B	ND		0.50	0.17	ug/L	1
1,2-Dibromoethane (EDB)	106-93-4	8260B	ND		0.50	0.061	ug/L	1
1,3-Dichlorobenzene	541-73-1	8260B	ND		0.50	0.17	ug/L	1
1,2-Dichlorobenzene	95-50-1	8260B	ND		0.50	0.17	ug/L	1
1,4-Dichlorobenzene	106-46-7	8260B	ND		0.50	0.17	ug/L	1
Dichlorodifluoromethane	75-71-8	8260B	ND		0.50	0.071	ug/L	1
1,1-Dichloroethane	75-34-3	8260B	ND		0.50	0.054	ug/L	1
1,2-Dichloroethane	107-06-2	8260B	ND		0.50	0.023	ug/L	1
trans-1,2-Dichloroethene	156-60-5	8260B	ND		0.50	0.079	ug/L	1
1,1-Dichloroethene	75-35-4	8260B	ND		0.50	0.094	ug/L	1
cis-1,2-Dichloroethene	156-59-2	8260B	0.38	J	0.50	0.087	ug/L	1
1,2-Dichloropropane	78-87-5	8260B	ND		0.50	0.081	ug/L	1
trans-1,3-Dichloropropene	10061-02-6	8260B	ND		0.50	0.18	ug/L	1
cis-1,3-Dichloropropene	10061-01-5	8260B	ND		0.50	0.090	ug/L	1
Ethylbenzene	100-41-4	8260B	ND		0.50	0.17	ug/L	1
2-Hexanone	591-78-6	8260B	ND		10	0.27	ug/L	1
Isopropylbenzene	98-82-8	8260B	ND		0.50	0.029	ug/L	1
Methyl acetate	79-20-9	8260B	ND		1.0	0.30	ug/L	1
Methyl tertiary butyl ether (MTBE)	1634-04-4	8260B	ND		0.50	0.019	ug/L	1
4-Methyl-2-pentanone	108-10-1	8260B	ND		10	0.31	ug/L	1
Methylcyclohexane	108-87-2	8260B	ND		5.0	0.95	ug/L	1
Methylene chloride	75-09-2	8260B	ND		0.50	0.17	ug/L	1
Styrene	100-42-5	8260B	ND		0.50	0.015	ug/L	1
1,1,2,2-Tetrachloroethane	79-34-5	8260B	ND		0.50	0.013	ug/L	1
Tetrachloroethene	127-18-4	8260B	1.5		0.50	0.014	ug/L	1
Toluene	108-88-3	8260B	1.1		0.50	0.17	ug/L	1
1,1,2-Trichloro-1,2,2-Trifluoroethane	76-13-1	8260B	ND		0.50	0.30	ug/L	1
1,2,4-Trichlorobenzene	120-82-1	8260B	ND		0.50	0.17	ug/L	1
1,1,1-Trichloroethane	71-55-6	8260B	ND		0.50	0.029	ug/L	1
1,1,2-Trichloroethane	79-00-5	8260B	ND		0.50	0.031	ug/L	1

PQL = Practical quantitation limit
B = Detected in the method blank
E = Quantitation of compound exceeded the calibration range
ND = Not detected at or above the MDL
J = Estimated result < PQL and ≥ MDL
P = The RPD between two GC columns exceeds 40%
Where applicable, all soil sample analysis are reported on a dry weight basis unless flagged with a "W"
N = Recovery is out of criteria
H = Out of holding time

Volatile Organic Compounds by GC/MS

Client: ARCADIS U.S., Inc.
Laboratory ID: LK11004-003
Description: E-8 (42-46)
Matrix: Aqueous
Date Sampled: 11/09/2010 1500
Date Received: 11/11/2010

Run	Prep Method	Analytical Method	Dilution	Analysis Date	Analyst	Prep Date	Batch
1	5030B	8260B	1	11/11/2010 2025	DLB		46389

Parameter	CAS Number	Analytical Method	Result	Q	PQL	MDL	Units	Run
Trichloroethene	79-01-6	8260B	2.0		0.50	0.024	ug/L	1
Trichlorofluoromethane	75-69-4	8260B	ND		0.50	0.051	ug/L	1
Vinyl chloride	75-01-4	8260B	ND		0.50	0.065	ug/L	1
Xylenes (total)	1330-20-7	8260B	ND		0.50	0.17	ug/L	1

Surrogate	Q	Run 1 % Recovery	Acceptance Limits
1,2-Dichloroethane-d4		100	70-130
Bromofluorobenzene		100	70-130
Toluene-d8		108	70-130

PQL = Practical quantitation limit
B = Detected in the method blank
E = Quantitation of compound exceeded the calibration range
ND = Not detected at or above the MDL
J = Estimated result < PQL and ≥ MDL
P = The RPD between two GC columns exceeds 40%
Where applicable, all soil sample analysis are reported on a dry weight basis unless flagged with a "W"
N = Recovery is out of criteria
H = Out of holding time

Volatile Organic Compounds by GC/MS

Client: ARCADIS U.S., Inc.
Laboratory ID: LK11004-004
Description: B-6 (30-34)
Matrix: Aqueous
Date Sampled: 11/09/2010 1630
Date Received: 11/11/2010

Run	Prep Method	Analytical Method	Dilution	Analysis Date	Analyst	Prep Date	Batch
1	5030B	8260B	1	11/11/2010 2049	DLB		46389

Parameter	CAS Number	Analytical Method	Result	Q	PQL	MDL	Units	Run
Acetone	67-64-1	8260B	20		10	3.3	ug/L	1
Benzene	71-43-2	8260B	0.62		0.50	0.027	ug/L	1
Bromodichloromethane	75-27-4	8260B	ND		0.50	0.17	ug/L	1
Bromoform	75-25-2	8260B	ND		0.50	0.010	ug/L	1
Bromomethane (Methyl bromide)	74-83-9	8260B	ND		0.50	0.20	ug/L	1
2-Butanone (MEK)	78-93-3	8260B	ND		10	2.0	ug/L	1
Carbon disulfide	75-15-0	8260B	ND		0.50	0.097	ug/L	1
Carbon tetrachloride	56-23-5	8260B	ND		0.50	0.085	ug/L	1
Chlorobenzene	108-90-7	8260B	ND		0.50	0.17	ug/L	1
Chloroethane	75-00-3	8260B	ND		0.50	0.17	ug/L	1
Chloroform	67-66-3	8260B	ND		0.50	0.17	ug/L	1
Chloromethane (Methyl chloride)	74-87-3	8260B	ND		0.50	0.17	ug/L	1
Cyclohexane	110-82-7	8260B	ND		0.50	0.30	ug/L	1
1,2-Dibromo-3-chloropropane (DBCP)	96-12-8	8260B	ND		0.50	0.069	ug/L	1
Dibromochloromethane	124-48-1	8260B	ND		0.50	0.17	ug/L	1
1,2-Dibromoethane (EDB)	106-93-4	8260B	ND		0.50	0.061	ug/L	1
1,3-Dichlorobenzene	541-73-1	8260B	ND		0.50	0.17	ug/L	1
1,2-Dichlorobenzene	95-50-1	8260B	ND		0.50	0.17	ug/L	1
1,4-Dichlorobenzene	106-46-7	8260B	ND		0.50	0.17	ug/L	1
Dichlorodifluoromethane	75-71-8	8260B	ND		0.50	0.071	ug/L	1
1,1-Dichloroethane	75-34-3	8260B	ND		0.50	0.054	ug/L	1
1,2-Dichloroethane	107-06-2	8260B	ND		0.50	0.023	ug/L	1
trans-1,2-Dichloroethene	156-60-5	8260B	ND		0.50	0.079	ug/L	1
1,1-Dichloroethene	75-35-4	8260B	ND		0.50	0.094	ug/L	1
cis-1,2-Dichloroethene	156-59-2	8260B	1.3		0.50	0.087	ug/L	1
1,2-Dichloropropane	78-87-5	8260B	ND		0.50	0.081	ug/L	1
trans-1,3-Dichloropropene	10061-02-6	8260B	ND		0.50	0.18	ug/L	1
cis-1,3-Dichloropropene	10061-01-5	8260B	ND		0.50	0.090	ug/L	1
Ethylbenzene	100-41-4	8260B	ND		0.50	0.17	ug/L	1
2-Hexanone	591-78-6	8260B	ND		10	0.27	ug/L	1
Isopropylbenzene	98-82-8	8260B	ND		0.50	0.029	ug/L	1
Methyl acetate	79-20-9	8260B	ND		1.0	0.30	ug/L	1
Methyl tertiary butyl ether (MTBE)	1634-04-4	8260B	ND		0.50	0.019	ug/L	1
4-Methyl-2-pentanone	108-10-1	8260B	ND		10	0.31	ug/L	1
Methylcyclohexane	108-87-2	8260B	ND		5.0	0.95	ug/L	1
Methylene chloride	75-09-2	8260B	ND		0.50	0.17	ug/L	1
Styrene	100-42-5	8260B	ND		0.50	0.015	ug/L	1
1,1,2,2-Tetrachloroethane	79-34-5	8260B	ND		0.50	0.013	ug/L	1
Tetrachloroethene	127-18-4	8260B	19		0.50	0.014	ug/L	1
Toluene	108-88-3	8260B	1.4		0.50	0.17	ug/L	1
1,1,2-Trichloro-1,2,2-Trifluoroethane	76-13-1	8260B	ND		0.50	0.30	ug/L	1
1,2,4-Trichlorobenzene	120-82-1	8260B	ND		0.50	0.17	ug/L	1
1,1,1-Trichloroethane	71-55-6	8260B	ND		0.50	0.029	ug/L	1
1,1,2-Trichloroethane	79-00-5	8260B	ND		0.50	0.031	ug/L	1

PQL = Practical quantitation limit
B = Detected in the method blank
E = Quantitation of compound exceeded the calibration range
ND = Not detected at or above the MDL
J = Estimated result < PQL and ≥ MDL
P = The RPD between two GC columns exceeds 40%
Where applicable, all soil sample analysis are reported on a dry weight basis unless flagged with a "W"
N = Recovery is out of criteria
H = Out of holding time

Volatile Organic Compounds by GC/MS

Client: ARCADIS U.S., Inc.
Laboratory ID: LK11004-004
Description: B-6 (30-34)
Matrix: Aqueous
Date Sampled: 11/09/2010 1630
Date Received: 11/11/2010

Run	Prep Method	Analytical Method	Dilution	Analysis Date	Analyst	Prep Date	Batch
1	5030B	8260B	1	11/11/2010 2049	DLB		46389

Parameter	CAS Number	Analytical Method	Result	Q	PQL	MDL	Units	Run
Trichloroethene	79-01-6	8260B	4.8		0.50	0.024	ug/L	1
Trichlorofluoromethane	75-69-4	8260B	ND		0.50	0.051	ug/L	1
Vinyl chloride	75-01-4	8260B	ND		0.50	0.065	ug/L	1
Xylenes (total)	1330-20-7	8260B	ND		0.50	0.17	ug/L	1

Surrogate	Q	Run 1 % Recovery	Acceptance Limits
1,2-Dichloroethane-d4		96	70-130
Bromofluorobenzene		94	70-130
Toluene-d8		93	70-130

PQL = Practical quantitation limit
B = Detected in the method blank
E = Quantitation of compound exceeded the calibration range
ND = Not detected at or above the MDL
J = Estimated result < PQL and ≥ MDL
P = The RPD between two GC columns exceeds 40%
Where applicable, all soil sample analysis are reported on a dry weight basis unless flagged with a "W"
N = Recovery is out of criteria
H = Out of holding time

Volatile Organic Compounds by GC/MS

Client: ARCADIS U.S., Inc.
Laboratory ID: LK11004-005
Description: B-6 (36-40)
Matrix: Aqueous
Date Sampled: 11/09/2010 1655
Date Received: 11/11/2010

Run	Prep Method	Analytical Method	Dilution	Analysis Date	Analyst	Prep Date	Batch
1	5030B	8260B	1	11/11/2010 2112	DLB		46389

Parameter	CAS Number	Analytical Method	Result	Q	PQL	MDL	Units	Run
Acetone	67-64-1	8260B	45		10	3.3	ug/L	1
Benzene	71-43-2	8260B	0.53		0.50	0.027	ug/L	1
Bromodichloromethane	75-27-4	8260B	ND		0.50	0.17	ug/L	1
Bromoform	75-25-2	8260B	ND		0.50	0.010	ug/L	1
Bromomethane (Methyl bromide)	74-83-9	8260B	ND		0.50	0.20	ug/L	1
2-Butanone (MEK)	78-93-3	8260B	11		10	2.0	ug/L	1
Carbon disulfide	75-15-0	8260B	ND		0.50	0.097	ug/L	1
Carbon tetrachloride	56-23-5	8260B	ND		0.50	0.085	ug/L	1
Chlorobenzene	108-90-7	8260B	ND		0.50	0.17	ug/L	1
Chloroethane	75-00-3	8260B	ND		0.50	0.17	ug/L	1
Chloroform	67-66-3	8260B	ND		0.50	0.17	ug/L	1
Chloromethane (Methyl chloride)	74-87-3	8260B	ND		0.50	0.17	ug/L	1
Cyclohexane	110-82-7	8260B	ND		0.50	0.30	ug/L	1
1,2-Dibromo-3-chloropropane (DBCP)	96-12-8	8260B	ND		0.50	0.069	ug/L	1
Dibromochloromethane	124-48-1	8260B	ND		0.50	0.17	ug/L	1
1,2-Dibromoethane (EDB)	106-93-4	8260B	ND		0.50	0.061	ug/L	1
1,3-Dichlorobenzene	541-73-1	8260B	ND		0.50	0.17	ug/L	1
1,2-Dichlorobenzene	95-50-1	8260B	ND		0.50	0.17	ug/L	1
1,4-Dichlorobenzene	106-46-7	8260B	ND		0.50	0.17	ug/L	1
Dichlorodifluoromethane	75-71-8	8260B	ND		0.50	0.071	ug/L	1
1,1-Dichloroethane	75-34-3	8260B	ND		0.50	0.054	ug/L	1
1,2-Dichloroethane	107-06-2	8260B	ND		0.50	0.023	ug/L	1
trans-1,2-Dichloroethene	156-60-5	8260B	ND		0.50	0.079	ug/L	1
1,1-Dichloroethene	75-35-4	8260B	ND		0.50	0.094	ug/L	1
cis-1,2-Dichloroethene	156-59-2	8260B	6.2		0.50	0.087	ug/L	1
1,2-Dichloropropane	78-87-5	8260B	ND		0.50	0.081	ug/L	1
trans-1,3-Dichloropropene	10061-02-6	8260B	ND		0.50	0.18	ug/L	1
cis-1,3-Dichloropropene	10061-01-5	8260B	ND		0.50	0.090	ug/L	1
Ethylbenzene	100-41-4	8260B	ND		0.50	0.17	ug/L	1
2-Hexanone	591-78-6	8260B	ND		10	0.27	ug/L	1
Isopropylbenzene	98-82-8	8260B	ND		0.50	0.029	ug/L	1
Methyl acetate	79-20-9	8260B	ND		1.0	0.30	ug/L	1
Methyl tertiary butyl ether (MTBE)	1634-04-4	8260B	ND		0.50	0.019	ug/L	1
4-Methyl-2-pentanone	108-10-1	8260B	ND		10	0.31	ug/L	1
Methylcyclohexane	108-87-2	8260B	ND		5.0	0.95	ug/L	1
Methylene chloride	75-09-2	8260B	0.99		0.50	0.17	ug/L	1
Styrene	100-42-5	8260B	ND		0.50	0.015	ug/L	1
1,1,2,2-Tetrachloroethane	79-34-5	8260B	ND		0.50	0.013	ug/L	1
Tetrachloroethene	127-18-4	8260B	37		0.50	0.014	ug/L	1
Toluene	108-88-3	8260B	1.2		0.50	0.17	ug/L	1
1,1,2-Trichloro-1,2,2-Trifluoroethane	76-13-1	8260B	ND		0.50	0.30	ug/L	1
1,2,4-Trichlorobenzene	120-82-1	8260B	ND		0.50	0.17	ug/L	1
1,1,1-Trichloroethane	71-55-6	8260B	ND		0.50	0.029	ug/L	1
1,1,2-Trichloroethane	79-00-5	8260B	ND		0.50	0.031	ug/L	1

PQL = Practical quantitation limit
B = Detected in the method blank
E = Quantitation of compound exceeded the calibration range
ND = Not detected at or above the MDL
J = Estimated result < PQL and ≥ MDL
P = The RPD between two GC columns exceeds 40%
Where applicable, all soil sample analysis are reported on a dry weight basis unless flagged with a "W"
N = Recovery is out of criteria
H = Out of holding time

Volatile Organic Compounds by GC/MS

Client: ARCADIS U.S., Inc.
Laboratory ID: LK11004-005
Description: B-6 (36-40)
Matrix: Aqueous
Date Sampled: 11/09/2010 1655
Date Received: 11/11/2010

Run	Prep Method	Analytical Method	Dilution	Analysis Date	Analyst	Prep Date	Batch
1	5030B	8260B	1	11/11/2010 2112	DLB		46389

Parameter	CAS Number	Analytical Method	Result	Q	PQL	MDL	Units	Run
Trichloroethene	79-01-6	8260B	15		0.50	0.024	ug/L	1
Trichlorofluoromethane	75-69-4	8260B	ND		0.50	0.051	ug/L	1
Vinyl chloride	75-01-4	8260B	ND		0.50	0.065	ug/L	1
Xylenes (total)	1330-20-7	8260B	ND		0.50	0.17	ug/L	1

Surrogate	Q	Run 1 % Recovery	Acceptance Limits
1,2-Dichloroethane-d4		103	70-130
Bromofluorobenzene		79	70-130
Toluene-d8		112	70-130

PQL = Practical quantitation limit
B = Detected in the method blank
E = Quantitation of compound exceeded the calibration range
ND = Not detected at or above the MDL
J = Estimated result < PQL and ≥ MDL
P = The RPD between two GC columns exceeds 40%
Where applicable, all soil sample analysis are reported on a dry weight basis unless flagged with a "W"
N = Recovery is out of criteria
H = Out of holding time

Volatile Organic Compounds by GC/MS

Client: ARCADIS U.S., Inc.
Laboratory ID: LK11004-006
Description: E-9 (30-34)
Matrix: Aqueous
Date Sampled: 11/10/2010 0930
Date Received: 11/11/2010

Run	Prep Method	Analytical Method	Dilution	Analysis Date	Analyst	Prep Date	Batch
1	5030B	8260B	1	11/11/2010 2136	DLB		46389

Parameter	CAS Number	Analytical Method	Result	Q	PQL	MDL	Units	Run
Acetone	67-64-1	8260B	4.8	J	10	3.3	ug/L	1
Benzene	71-43-2	8260B	0.15	J	0.50	0.027	ug/L	1
Bromodichloromethane	75-27-4	8260B	ND		0.50	0.17	ug/L	1
Bromoform	75-25-2	8260B	ND		0.50	0.010	ug/L	1
Bromomethane (Methyl bromide)	74-83-9	8260B	ND		0.50	0.20	ug/L	1
2-Butanone (MEK)	78-93-3	8260B	9.7	J	10	2.0	ug/L	1
Carbon disulfide	75-15-0	8260B	ND		0.50	0.097	ug/L	1
Carbon tetrachloride	56-23-5	8260B	ND		0.50	0.085	ug/L	1
Chlorobenzene	108-90-7	8260B	ND		0.50	0.17	ug/L	1
Chloroethane	75-00-3	8260B	ND		0.50	0.17	ug/L	1
Chloroform	67-66-3	8260B	ND		0.50	0.17	ug/L	1
Chloromethane (Methyl chloride)	74-87-3	8260B	ND		0.50	0.17	ug/L	1
Cyclohexane	110-82-7	8260B	ND		0.50	0.30	ug/L	1
1,2-Dibromo-3-chloropropane (DBCP)	96-12-8	8260B	ND		0.50	0.069	ug/L	1
Dibromochloromethane	124-48-1	8260B	ND		0.50	0.17	ug/L	1
1,2-Dibromoethane (EDB)	106-93-4	8260B	ND		0.50	0.061	ug/L	1
1,3-Dichlorobenzene	541-73-1	8260B	ND		0.50	0.17	ug/L	1
1,2-Dichlorobenzene	95-50-1	8260B	ND		0.50	0.17	ug/L	1
1,4-Dichlorobenzene	106-46-7	8260B	ND		0.50	0.17	ug/L	1
Dichlorodifluoromethane	75-71-8	8260B	ND		0.50	0.071	ug/L	1
1,1-Dichloroethane	75-34-3	8260B	ND		0.50	0.054	ug/L	1
1,2-Dichloroethane	107-06-2	8260B	ND		0.50	0.023	ug/L	1
trans-1,2-Dichloroethene	156-60-5	8260B	ND		0.50	0.079	ug/L	1
1,1-Dichloroethene	75-35-4	8260B	0.39	J	0.50	0.094	ug/L	1
cis-1,2-Dichloroethene	156-59-2	8260B	30		0.50	0.087	ug/L	1
1,2-Dichloropropane	78-87-5	8260B	ND		0.50	0.081	ug/L	1
trans-1,3-Dichloropropene	10061-02-6	8260B	ND		0.50	0.18	ug/L	1
cis-1,3-Dichloropropene	10061-01-5	8260B	ND		0.50	0.090	ug/L	1
Ethylbenzene	100-41-4	8260B	ND		0.50	0.17	ug/L	1
2-Hexanone	591-78-6	8260B	ND		10	0.27	ug/L	1
Isopropylbenzene	98-82-8	8260B	ND		0.50	0.029	ug/L	1
Methyl acetate	79-20-9	8260B	ND		1.0	0.30	ug/L	1
Methyl tertiary butyl ether (MTBE)	1634-04-4	8260B	ND		0.50	0.019	ug/L	1
4-Methyl-2-pentanone	108-10-1	8260B	ND		10	0.31	ug/L	1
Methylcyclohexane	108-87-2	8260B	ND		5.0	0.95	ug/L	1
Methylene chloride	75-09-2	8260B	ND		0.50	0.17	ug/L	1
Styrene	100-42-5	8260B	ND		0.50	0.015	ug/L	1
1,1,2,2-Tetrachloroethane	79-34-5	8260B	ND		0.50	0.013	ug/L	1
Tetrachloroethene	127-18-4	8260B	95		0.50	0.014	ug/L	1
Toluene	108-88-3	8260B	0.64		0.50	0.17	ug/L	1
1,1,2-Trichloro-1,2,2-Trifluoroethane	76-13-1	8260B	ND		0.50	0.30	ug/L	1
1,2,4-Trichlorobenzene	120-82-1	8260B	ND		0.50	0.17	ug/L	1
1,1,1-Trichloroethane	71-55-6	8260B	ND		0.50	0.029	ug/L	1
1,1,2-Trichloroethane	79-00-5	8260B	ND		0.50	0.031	ug/L	1

PQL = Practical quantitation limit
B = Detected in the method blank
E = Quantitation of compound exceeded the calibration range
ND = Not detected at or above the MDL
J = Estimated result < PQL and ≥ MDL
P = The RPD between two GC columns exceeds 40%
Where applicable, all soil sample analysis are reported on a dry weight basis unless flagged with a "W"
N = Recovery is out of criteria
H = Out of holding time

Volatile Organic Compounds by GC/MS

Client: ARCADIS U.S., Inc.
Laboratory ID: LK11004-006
Description: E-9 (30-34)
Matrix: Aqueous
Date Sampled: 11/10/2010 0930
Date Received: 11/11/2010

Run	Prep Method	Analytical Method	Dilution	Analysis Date	Analyst	Prep Date	Batch
1	5030B	8260B	1	11/11/2010 2136	DLB		46389

Parameter	CAS Number	Analytical Method	Result	Q	PQL	MDL	Units	Run
Trichloroethene	79-01-6	8260B	140		0.50	0.024	ug/L	1
Trichlorofluoromethane	75-69-4	8260B	ND		0.50	0.051	ug/L	1
Vinyl chloride	75-01-4	8260B	ND		0.50	0.065	ug/L	1
Xylenes (total)	1330-20-7	8260B	ND		0.50	0.17	ug/L	1

Surrogate	Q	Run 1 % Recovery	Acceptance Limits
1,2-Dichloroethane-d4		105	70-130
Bromofluorobenzene		95	70-130
Toluene-d8		110	70-130

PQL = Practical quantitation limit
B = Detected in the method blank
E = Quantitation of compound exceeded the calibration range
ND = Not detected at or above the MDL
J = Estimated result < PQL and ≥ MDL
P = The RPD between two GC columns exceeds 40%
Where applicable, all soil sample analysis are reported on a dry weight basis unless flagged with a "W"
N = Recovery is out of criteria
H = Out of holding time

Volatile Organic Compounds by GC/MS

Client: ARCADIS U.S., Inc.
Laboratory ID: LK11004-007
Description: E-9 (36-40)
Matrix: Aqueous
Date Sampled: 11/10/2010 1010
Date Received: 11/11/2010

Run	Prep Method	Analytical Method	Dilution	Analysis Date	Analyst	Prep Date	Batch
1	5030B	8260B	1	11/13/2010 2338	DLB		46566

Parameter	CAS Number	Analytical Method	Result	Q	PQL	MDL	Units	Run
Acetone	67-64-1	8260B	26		10	3.3	ug/L	1
Benzene	71-43-2	8260B	2.1		0.50	0.027	ug/L	1
Bromodichloromethane	75-27-4	8260B	ND		0.50	0.17	ug/L	1
Bromoform	75-25-2	8260B	ND		0.50	0.010	ug/L	1
Bromomethane (Methyl bromide)	74-83-9	8260B	ND		0.50	0.20	ug/L	1
2-Butanone (MEK)	78-93-3	8260B	7.6	J	10	2.0	ug/L	1
Carbon disulfide	75-15-0	8260B	ND		0.50	0.097	ug/L	1
Carbon tetrachloride	56-23-5	8260B	ND		0.50	0.085	ug/L	1
Chlorobenzene	108-90-7	8260B	ND		0.50	0.17	ug/L	1
Chloroethane	75-00-3	8260B	ND		0.50	0.17	ug/L	1
Chloroform	67-66-3	8260B	ND		0.50	0.17	ug/L	1
Chloromethane (Methyl chloride)	74-87-3	8260B	ND		0.50	0.17	ug/L	1
Cyclohexane	110-82-7	8260B	ND		0.50	0.30	ug/L	1
1,2-Dibromo-3-chloropropane (DBCP)	96-12-8	8260B	ND		0.50	0.069	ug/L	1
Dibromochloromethane	124-48-1	8260B	ND		0.50	0.17	ug/L	1
1,2-Dibromoethane (EDB)	106-93-4	8260B	ND		0.50	0.061	ug/L	1
1,3-Dichlorobenzene	541-73-1	8260B	ND		0.50	0.17	ug/L	1
1,2-Dichlorobenzene	95-50-1	8260B	ND		0.50	0.17	ug/L	1
1,4-Dichlorobenzene	106-46-7	8260B	ND		0.50	0.17	ug/L	1
Dichlorodifluoromethane	75-71-8	8260B	ND		0.50	0.071	ug/L	1
1,1-Dichloroethane	75-34-3	8260B	ND		0.50	0.054	ug/L	1
1,2-Dichloroethane	107-06-2	8260B	ND		0.50	0.023	ug/L	1
trans-1,2-Dichloroethene	156-60-5	8260B	ND		0.50	0.079	ug/L	1
1,1-Dichloroethene	75-35-4	8260B	ND		0.50	0.094	ug/L	1
cis-1,2-Dichloroethene	156-59-2	8260B	3.1		0.50	0.087	ug/L	1
1,2-Dichloropropane	78-87-5	8260B	ND		0.50	0.081	ug/L	1
trans-1,3-Dichloropropene	10061-02-6	8260B	ND		0.50	0.18	ug/L	1
cis-1,3-Dichloropropene	10061-01-5	8260B	ND		0.50	0.090	ug/L	1
Ethylbenzene	100-41-4	8260B	0.44	J	0.50	0.17	ug/L	1
2-Hexanone	591-78-6	8260B	0.81	J	10	0.27	ug/L	1
Isopropylbenzene	98-82-8	8260B	ND		0.50	0.029	ug/L	1
Methyl acetate	79-20-9	8260B	ND		1.0	0.30	ug/L	1
Methyl tertiary butyl ether (MTBE)	1634-04-4	8260B	ND		0.50	0.019	ug/L	1
4-Methyl-2-pentanone	108-10-1	8260B	ND		10	0.31	ug/L	1
Methylcyclohexane	108-87-2	8260B	ND		5.0	0.95	ug/L	1
Methylene chloride	75-09-2	8260B	ND		0.50	0.17	ug/L	1
Styrene	100-42-5	8260B	ND		0.50	0.015	ug/L	1
1,1,2,2-Tetrachloroethane	79-34-5	8260B	ND		0.50	0.013	ug/L	1
Tetrachloroethene	127-18-4	8260B	1.5		0.50	0.014	ug/L	1
Toluene	108-88-3	8260B	2.0		0.50	0.17	ug/L	1
1,1,2-Trichloro-1,2,2-Trifluoroethane	76-13-1	8260B	ND		0.50	0.30	ug/L	1
1,2,4-Trichlorobenzene	120-82-1	8260B	ND		0.50	0.17	ug/L	1
1,1,1-Trichloroethane	71-55-6	8260B	ND		0.50	0.029	ug/L	1
1,1,2-Trichloroethane	79-00-5	8260B	ND		0.50	0.031	ug/L	1

PQL = Practical quantitation limit
B = Detected in the method blank
E = Quantitation of compound exceeded the calibration range
ND = Not detected at or above the MDL
J = Estimated result < PQL and ≥ MDL
P = The RPD between two GC columns exceeds 40%
Where applicable, all soil sample analysis are reported on a dry weight basis unless flagged with a "W"
N = Recovery is out of criteria
H = Out of holding time

Volatile Organic Compounds by GC/MS

Client: ARCADIS U.S., Inc.
Laboratory ID: LK11004-007
Description: E-9 (36-40)
Matrix: Aqueous
Date Sampled: 11/10/2010 1010
Date Received: 11/11/2010

Run	Prep Method	Analytical Method	Dilution	Analysis Date	Analyst	Prep Date	Batch
1	5030B	8260B	1	11/13/2010 2338	DLB		46566

Parameter	CAS Number	Analytical Method	Result	Q	PQL	MDL	Units	Run
Trichloroethene	79-01-6	8260B	6.4		0.50	0.024	ug/L	1
Trichlorofluoromethane	75-69-4	8260B	ND		0.50	0.051	ug/L	1
Vinyl chloride	75-01-4	8260B	ND		0.50	0.065	ug/L	1
Xylenes (total)	1330-20-7	8260B	1.2		0.50	0.17	ug/L	1

Surrogate	Q	Run 1 % Recovery	Acceptance Limits
1,2-Dichloroethane-d4		100	70-130
Bromofluorobenzene		114	70-130
Toluene-d8		103	70-130

PQL = Practical quantitation limit
B = Detected in the method blank
E = Quantitation of compound exceeded the calibration range
ND = Not detected at or above the MDL
J = Estimated result < PQL and ≥ MDL
P = The RPD between two GC columns exceeds 40%
Where applicable, all soil sample analysis are reported on a dry weight basis unless flagged with a "W"
N = Recovery is out of criteria
H = Out of holding time

Volatile Organic Compounds by GC/MS

Client: ARCADIS U.S., Inc.
Laboratory ID: LK11004-008
Description: E-9 (42-46)
Matrix: Aqueous
Date Sampled: 11/10/2010 1040
Date Received: 11/11/2010

Run	Prep Method	Analytical Method	Dilution	Analysis Date	Analyst	Prep Date	Batch
1	5030B	8260B	1	11/13/2010 2359	DLB		46566

Parameter	CAS Number	Analytical Method	Result	Q	PQL	MDL	Units	Run
Acetone	67-64-1	8260B	11		10	3.3	ug/L	1
Benzene	71-43-2	8260B	0.44	J	0.50	0.027	ug/L	1
Bromodichloromethane	75-27-4	8260B	ND		0.50	0.17	ug/L	1
Bromoform	75-25-2	8260B	ND		0.50	0.010	ug/L	1
Bromomethane (Methyl bromide)	74-83-9	8260B	ND		0.50	0.20	ug/L	1
2-Butanone (MEK)	78-93-3	8260B	ND		10	2.0	ug/L	1
Carbon disulfide	75-15-0	8260B	ND		0.50	0.097	ug/L	1
Carbon tetrachloride	56-23-5	8260B	ND		0.50	0.085	ug/L	1
Chlorobenzene	108-90-7	8260B	ND		0.50	0.17	ug/L	1
Chloroethane	75-00-3	8260B	ND		0.50	0.17	ug/L	1
Chloroform	67-66-3	8260B	ND		0.50	0.17	ug/L	1
Chloromethane (Methyl chloride)	74-87-3	8260B	ND		0.50	0.17	ug/L	1
Cyclohexane	110-82-7	8260B	ND		0.50	0.30	ug/L	1
1,2-Dibromo-3-chloropropane (DBCP)	96-12-8	8260B	ND		0.50	0.069	ug/L	1
Dibromochloromethane	124-48-1	8260B	ND		0.50	0.17	ug/L	1
1,2-Dibromoethane (EDB)	106-93-4	8260B	ND		0.50	0.061	ug/L	1
1,3-Dichlorobenzene	541-73-1	8260B	ND		0.50	0.17	ug/L	1
1,2-Dichlorobenzene	95-50-1	8260B	ND		0.50	0.17	ug/L	1
1,4-Dichlorobenzene	106-46-7	8260B	ND		0.50	0.17	ug/L	1
Dichlorodifluoromethane	75-71-8	8260B	ND		0.50	0.071	ug/L	1
1,1-Dichloroethane	75-34-3	8260B	ND		0.50	0.054	ug/L	1
1,2-Dichloroethane	107-06-2	8260B	ND		0.50	0.023	ug/L	1
trans-1,2-Dichloroethene	156-60-5	8260B	ND		0.50	0.079	ug/L	1
1,1-Dichloroethene	75-35-4	8260B	ND		0.50	0.094	ug/L	1
cis-1,2-Dichloroethene	156-59-2	8260B	0.27	J	0.50	0.087	ug/L	1
1,2-Dichloropropane	78-87-5	8260B	ND		0.50	0.081	ug/L	1
trans-1,3-Dichloropropene	10061-02-6	8260B	ND		0.50	0.18	ug/L	1
cis-1,3-Dichloropropene	10061-01-5	8260B	ND		0.50	0.090	ug/L	1
Ethylbenzene	100-41-4	8260B	ND		0.50	0.17	ug/L	1
2-Hexanone	591-78-6	8260B	0.38	J	10	0.27	ug/L	1
Isopropylbenzene	98-82-8	8260B	ND		0.50	0.029	ug/L	1
Methyl acetate	79-20-9	8260B	ND		1.0	0.30	ug/L	1
Methyl tertiary butyl ether (MTBE)	1634-04-4	8260B	ND		0.50	0.019	ug/L	1
4-Methyl-2-pentanone	108-10-1	8260B	ND		10	0.31	ug/L	1
Methylcyclohexane	108-87-2	8260B	ND		5.0	0.95	ug/L	1
Methylene chloride	75-09-2	8260B	ND		0.50	0.17	ug/L	1
Styrene	100-42-5	8260B	ND		0.50	0.015	ug/L	1
1,1,2,2-Tetrachloroethane	79-34-5	8260B	ND		0.50	0.013	ug/L	1
Tetrachloroethene	127-18-4	8260B	0.71		0.50	0.014	ug/L	1
Toluene	108-88-3	8260B	0.73		0.50	0.17	ug/L	1
1,1,2-Trichloro-1,2,2-Trifluoroethane	76-13-1	8260B	ND		0.50	0.30	ug/L	1
1,2,4-Trichlorobenzene	120-82-1	8260B	ND		0.50	0.17	ug/L	1
1,1,1-Trichloroethane	71-55-6	8260B	ND		0.50	0.029	ug/L	1
1,1,2-Trichloroethane	79-00-5	8260B	ND		0.50	0.031	ug/L	1

PQL = Practical quantitation limit
B = Detected in the method blank
E = Quantitation of compound exceeded the calibration range
ND = Not detected at or above the MDL
J = Estimated result < PQL and ≥ MDL
P = The RPD between two GC columns exceeds 40%
Where applicable, all soil sample analysis are reported on a dry weight basis unless flagged with a "W"
N = Recovery is out of criteria
H = Out of holding time

Volatile Organic Compounds by GC/MS

Client: ARCADIS U.S., Inc.
Laboratory ID: LK11004-008
Description: E-9 (42-46)
Matrix: Aqueous
Date Sampled: 11/10/2010 1040
Date Received: 11/11/2010

Run	Prep Method	Analytical Method	Dilution	Analysis Date	Analyst	Prep Date	Batch
1	5030B	8260B	1	11/13/2010 2359	DLB		46566

Parameter	CAS Number	Analytical Method	Result	Q	PQL	MDL	Units	Run
Trichloroethene	79-01-6	8260B	0.67		0.50	0.024	ug/L	1
Trichlorofluoromethane	75-69-4	8260B	ND		0.50	0.051	ug/L	1
Vinyl chloride	75-01-4	8260B	ND		0.50	0.065	ug/L	1
Xylenes (total)	1330-20-7	8260B	0.59		0.50	0.17	ug/L	1

Surrogate	Q	Run 1 % Recovery	Acceptance Limits
1,2-Dichloroethane-d4		97	70-130
Bromofluorobenzene		114	70-130
Toluene-d8		103	70-130

PQL = Practical quantitation limit
B = Detected in the method blank
E = Quantitation of compound exceeded the calibration range
ND = Not detected at or above the MDL
J = Estimated result < PQL and ≥ MDL
P = The RPD between two GC columns exceeds 40%
Where applicable, all soil sample analysis are reported on a dry weight basis unless flagged with a "W"
N = Recovery is out of criteria
H = Out of holding time

Volatile Organic Compounds by GC/MS

Client: ARCADIS U.S., Inc.
Laboratory ID: LK11004-009
Description: E-10 (30-34)
Matrix: Aqueous
Date Sampled: 11/10/2010 1215
Date Received: 11/11/2010

Run	Prep Method	Analytical Method	Dilution	Analysis Date	Analyst	Prep Date	Batch
1	5030B	8260B	1	11/11/2010 2159	DLB		46389

Parameter	CAS Number	Analytical Method	Result	Q	PQL	MDL	Units	Run
Acetone	67-64-1	8260B	8.4	J	10	3.3	ug/L	1
Benzene	71-43-2	8260B	0.18	J	0.50	0.027	ug/L	1
Bromodichloromethane	75-27-4	8260B	ND		0.50	0.17	ug/L	1
Bromoform	75-25-2	8260B	ND		0.50	0.010	ug/L	1
Bromomethane (Methyl bromide)	74-83-9	8260B	ND		0.50	0.20	ug/L	1
2-Butanone (MEK)	78-93-3	8260B	ND		10	2.0	ug/L	1
Carbon disulfide	75-15-0	8260B	ND		0.50	0.097	ug/L	1
Carbon tetrachloride	56-23-5	8260B	ND		0.50	0.085	ug/L	1
Chlorobenzene	108-90-7	8260B	ND		0.50	0.17	ug/L	1
Chloroethane	75-00-3	8260B	ND		0.50	0.17	ug/L	1
Chloroform	67-66-3	8260B	ND		0.50	0.17	ug/L	1
Chloromethane (Methyl chloride)	74-87-3	8260B	ND		0.50	0.17	ug/L	1
Cyclohexane	110-82-7	8260B	ND		0.50	0.30	ug/L	1
1,2-Dibromo-3-chloropropane (DBCP)	96-12-8	8260B	ND		0.50	0.069	ug/L	1
Dibromochloromethane	124-48-1	8260B	ND		0.50	0.17	ug/L	1
1,2-Dibromoethane (EDB)	106-93-4	8260B	ND		0.50	0.061	ug/L	1
1,3-Dichlorobenzene	541-73-1	8260B	ND		0.50	0.17	ug/L	1
1,2-Dichlorobenzene	95-50-1	8260B	ND		0.50	0.17	ug/L	1
1,4-Dichlorobenzene	106-46-7	8260B	ND		0.50	0.17	ug/L	1
Dichlorodifluoromethane	75-71-8	8260B	ND		0.50	0.071	ug/L	1
1,1-Dichloroethane	75-34-3	8260B	ND		0.50	0.054	ug/L	1
1,2-Dichloroethane	107-06-2	8260B	ND		0.50	0.023	ug/L	1
trans-1,2-Dichloroethene	156-60-5	8260B	ND		0.50	0.079	ug/L	1
1,1-Dichloroethene	75-35-4	8260B	ND		0.50	0.094	ug/L	1
cis-1,2-Dichloroethene	156-59-2	8260B	0.44	J	0.50	0.087	ug/L	1
1,2-Dichloropropane	78-87-5	8260B	ND		0.50	0.081	ug/L	1
trans-1,3-Dichloropropene	10061-02-6	8260B	ND		0.50	0.18	ug/L	1
cis-1,3-Dichloropropene	10061-01-5	8260B	ND		0.50	0.090	ug/L	1
Ethylbenzene	100-41-4	8260B	ND		0.50	0.17	ug/L	1
2-Hexanone	591-78-6	8260B	ND		10	0.27	ug/L	1
Isopropylbenzene	98-82-8	8260B	ND		0.50	0.029	ug/L	1
Methyl acetate	79-20-9	8260B	ND		1.0	0.30	ug/L	1
Methyl tertiary butyl ether (MTBE)	1634-04-4	8260B	ND		0.50	0.019	ug/L	1
4-Methyl-2-pentanone	108-10-1	8260B	ND		10	0.31	ug/L	1
Methylcyclohexane	108-87-2	8260B	ND		5.0	0.95	ug/L	1
Methylene chloride	75-09-2	8260B	ND		0.50	0.17	ug/L	1
Styrene	100-42-5	8260B	ND		0.50	0.015	ug/L	1
1,1,2,2-Tetrachloroethane	79-34-5	8260B	ND		0.50	0.013	ug/L	1
Tetrachloroethene	127-18-4	8260B	0.35	J	0.50	0.014	ug/L	1
Toluene	108-88-3	8260B	0.80		0.50	0.17	ug/L	1
1,1,2-Trichloro-1,2,2-Trifluoroethane	76-13-1	8260B	ND		0.50	0.30	ug/L	1
1,2,4-Trichlorobenzene	120-82-1	8260B	ND		0.50	0.17	ug/L	1
1,1,1-Trichloroethane	71-55-6	8260B	ND		0.50	0.029	ug/L	1
1,1,2-Trichloroethane	79-00-5	8260B	ND		0.50	0.031	ug/L	1

PQL = Practical quantitation limit
B = Detected in the method blank
E = Quantitation of compound exceeded the calibration range
ND = Not detected at or above the MDL
J = Estimated result < PQL and ≥ MDL
P = The RPD between two GC columns exceeds 40%
Where applicable, all soil sample analysis are reported on a dry weight basis unless flagged with a "W"
N = Recovery is out of criteria
H = Out of holding time

Volatile Organic Compounds by GC/MS

Client: ARCADIS U.S., Inc.
Laboratory ID: LK11004-009
Description: E-10 (30-34)
Matrix: Aqueous
Date Sampled: 11/10/2010 1215
Date Received: 11/11/2010

Run	Prep Method	Analytical Method	Dilution	Analysis Date	Analyst	Prep Date	Batch
1	5030B	8260B	1	11/11/2010 2159	DLB		46389

Parameter	CAS Number	Analytical Method	Result	Q	PQL	MDL	Units	Run
Trichloroethene	79-01-6	8260B	1.4		0.50	0.024	ug/L	1
Trichlorofluoromethane	75-69-4	8260B	ND		0.50	0.051	ug/L	1
Vinyl chloride	75-01-4	8260B	ND		0.50	0.065	ug/L	1
Xylenes (total)	1330-20-7	8260B	ND		0.50	0.17	ug/L	1

Surrogate	Q	Run 1 % Recovery	Acceptance Limits
1,2-Dichloroethane-d4		100	70-130
Bromofluorobenzene		95	70-130
Toluene-d8		109	70-130

PQL = Practical quantitation limit
B = Detected in the method blank
E = Quantitation of compound exceeded the calibration range
ND = Not detected at or above the MDL
J = Estimated result < PQL and ≥ MDL
P = The RPD between two GC columns exceeds 40%
Where applicable, all soil sample analysis are reported on a dry weight basis unless flagged with a "W"
N = Recovery is out of criteria
H = Out of holding time

Volatile Organic Compounds by GC/MS

Client: ARCADIS U.S., Inc.
Laboratory ID: LK11004-010
Description: Trip Blank
Matrix: Aqueous
Date Sampled: 11/10/2010
Date Received: 11/11/2010

Run	Prep Method	Analytical Method	Dilution	Analysis Date	Analyst	Prep Date	Batch
1	5030B	8260B	1	11/13/2010 2316	DLB		46566

Parameter	CAS Number	Analytical Method	Result	Q	PQL	MDL	Units	Run
Acetone	67-64-1	8260B	ND		10	3.3	ug/L	1
Benzene	71-43-2	8260B	ND		0.50	0.027	ug/L	1
Bromodichloromethane	75-27-4	8260B	ND		0.50	0.17	ug/L	1
Bromoform	75-25-2	8260B	ND		0.50	0.010	ug/L	1
Bromomethane (Methyl bromide)	74-83-9	8260B	ND		0.50	0.20	ug/L	1
2-Butanone (MEK)	78-93-3	8260B	ND		10	2.0	ug/L	1
Carbon disulfide	75-15-0	8260B	0.37	J	0.50	0.097	ug/L	1
Carbon tetrachloride	56-23-5	8260B	ND		0.50	0.085	ug/L	1
Chlorobenzene	108-90-7	8260B	ND		0.50	0.17	ug/L	1
Chloroethane	75-00-3	8260B	ND		0.50	0.17	ug/L	1
Chloroform	67-66-3	8260B	ND		0.50	0.17	ug/L	1
Chloromethane (Methyl chloride)	74-87-3	8260B	ND		0.50	0.17	ug/L	1
Cyclohexane	110-82-7	8260B	ND		0.50	0.30	ug/L	1
1,2-Dibromo-3-chloropropane (DBCP)	96-12-8	8260B	ND		0.50	0.069	ug/L	1
Dibromochloromethane	124-48-1	8260B	ND		0.50	0.17	ug/L	1
1,2-Dibromoethane (EDB)	106-93-4	8260B	ND		0.50	0.061	ug/L	1
1,3-Dichlorobenzene	541-73-1	8260B	ND		0.50	0.17	ug/L	1
1,2-Dichlorobenzene	95-50-1	8260B	ND		0.50	0.17	ug/L	1
1,4-Dichlorobenzene	106-46-7	8260B	ND		0.50	0.17	ug/L	1
Dichlorodifluoromethane	75-71-8	8260B	ND		0.50	0.071	ug/L	1
1,1-Dichloroethane	75-34-3	8260B	ND		0.50	0.054	ug/L	1
1,2-Dichloroethane	107-06-2	8260B	ND		0.50	0.023	ug/L	1
trans-1,2-Dichloroethene	156-60-5	8260B	ND		0.50	0.079	ug/L	1
1,1-Dichloroethene	75-35-4	8260B	ND		0.50	0.094	ug/L	1
cis-1,2-Dichloroethene	156-59-2	8260B	ND		0.50	0.087	ug/L	1
1,2-Dichloropropane	78-87-5	8260B	ND		0.50	0.081	ug/L	1
trans-1,3-Dichloropropene	10061-02-6	8260B	ND		0.50	0.18	ug/L	1
cis-1,3-Dichloropropene	10061-01-5	8260B	ND		0.50	0.090	ug/L	1
Ethylbenzene	100-41-4	8260B	ND		0.50	0.17	ug/L	1
2-Hexanone	591-78-6	8260B	ND		10	0.27	ug/L	1
Isopropylbenzene	98-82-8	8260B	ND		0.50	0.029	ug/L	1
Methyl acetate	79-20-9	8260B	ND		1.0	0.30	ug/L	1
Methyl tertiary butyl ether (MTBE)	1634-04-4	8260B	ND		0.50	0.019	ug/L	1
4-Methyl-2-pentanone	108-10-1	8260B	ND		10	0.31	ug/L	1
Methylcyclohexane	108-87-2	8260B	ND		5.0	0.95	ug/L	1
Methylene chloride	75-09-2	8260B	ND		0.50	0.17	ug/L	1
Styrene	100-42-5	8260B	ND		0.50	0.015	ug/L	1
1,1,2,2-Tetrachloroethane	79-34-5	8260B	ND		0.50	0.013	ug/L	1
Tetrachloroethene	127-18-4	8260B	ND		0.50	0.014	ug/L	1
Toluene	108-88-3	8260B	ND		0.50	0.17	ug/L	1
1,1,2-Trichloro-1,2,2-Trifluoroethane	76-13-1	8260B	ND		0.50	0.30	ug/L	1
1,2,4-Trichlorobenzene	120-82-1	8260B	0.39	J	0.50	0.17	ug/L	1
1,1,1-Trichloroethane	71-55-6	8260B	ND		0.50	0.029	ug/L	1
1,1,2-Trichloroethane	79-00-5	8260B	ND		0.50	0.031	ug/L	1

PQL = Practical quantitation limit
B = Detected in the method blank
E = Quantitation of compound exceeded the calibration range
ND = Not detected at or above the MDL
J = Estimated result < PQL and ≥ MDL
P = The RPD between two GC columns exceeds 40%
Where applicable, all soil sample analysis are reported on a dry weight basis unless flagged with a "W"
N = Recovery is out of criteria
H = Out of holding time

Volatile Organic Compounds by GC/MS

Client: ARCADIS U.S., Inc.
Laboratory ID: LK11004-010
Description: Trip Blank
Matrix: Aqueous
Date Sampled: 11/10/2010
Date Received: 11/11/2010

Run	Prep Method	Analytical Method	Dilution	Analysis Date	Analyst	Prep Date	Batch
1	5030B	8260B	1	11/13/2010 2316	DLB		46566

Parameter	CAS Number	Analytical Method	Result	Q	PQL	MDL	Units	Run
Trichloroethene	79-01-6	8260B	ND		0.50	0.024	ug/L	1
Trichlorofluoromethane	75-69-4	8260B	ND		0.50	0.051	ug/L	1
Vinyl chloride	75-01-4	8260B	ND		0.50	0.065	ug/L	1
Xylenes (total)	1330-20-7	8260B	ND		0.50	0.17	ug/L	1

Surrogate	Q	Run 1 % Recovery	Acceptance Limits
1,2-Dichloroethane-d4		101	70-130
Bromofluorobenzene		115	70-130
Toluene-d8		102	70-130

PQL = Practical quantitation limit
B = Detected in the method blank
E = Quantitation of compound exceeded the calibration range
ND = Not detected at or above the MDL
J = Estimated result < PQL and ≥ MDL
P = The RPD between two GC columns exceeds 40%
Where applicable, all soil sample analysis are reported on a dry weight basis unless flagged with a "W"
N = Recovery is out of criteria
H = Out of holding time

Volatile Organic Compounds by GC/MS

Client: ARCADIS U.S., Inc.
Laboratory ID: LK11004-011
Description: E-10 (36-40)
Matrix: Aqueous
Date Sampled: 11/10/2010 1245
Date Received: 11/11/2010

Run	Prep Method	Analytical Method	Dilution	Analysis Date	Analyst	Prep Date	Batch
1	5030B	8260B	1	11/14/2010 0021	DLB		46566

Parameter	CAS Number	Analytical Method	Result	Q	PQL	MDL	Units	Run
Acetone	67-64-1	8260B	16		10	3.3	ug/L	1
Benzene	71-43-2	8260B	0.87		0.50	0.027	ug/L	1
Bromodichloromethane	75-27-4	8260B	ND		0.50	0.17	ug/L	1
Bromoform	75-25-2	8260B	ND		0.50	0.010	ug/L	1
Bromomethane (Methyl bromide)	74-83-9	8260B	ND		0.50	0.20	ug/L	1
2-Butanone (MEK)	78-93-3	8260B	3.6	J	10	2.0	ug/L	1
Carbon disulfide	75-15-0	8260B	ND		0.50	0.097	ug/L	1
Carbon tetrachloride	56-23-5	8260B	ND		0.50	0.085	ug/L	1
Chlorobenzene	108-90-7	8260B	ND		0.50	0.17	ug/L	1
Chloroethane	75-00-3	8260B	ND		0.50	0.17	ug/L	1
Chloroform	67-66-3	8260B	ND		0.50	0.17	ug/L	1
Chloromethane (Methyl chloride)	74-87-3	8260B	ND		0.50	0.17	ug/L	1
Cyclohexane	110-82-7	8260B	ND		0.50	0.30	ug/L	1
1,2-Dibromo-3-chloropropane (DBCP)	96-12-8	8260B	ND		0.50	0.069	ug/L	1
Dibromochloromethane	124-48-1	8260B	ND		0.50	0.17	ug/L	1
1,2-Dibromoethane (EDB)	106-93-4	8260B	ND		0.50	0.061	ug/L	1
1,3-Dichlorobenzene	541-73-1	8260B	ND		0.50	0.17	ug/L	1
1,2-Dichlorobenzene	95-50-1	8260B	ND		0.50	0.17	ug/L	1
1,4-Dichlorobenzene	106-46-7	8260B	ND		0.50	0.17	ug/L	1
Dichlorodifluoromethane	75-71-8	8260B	ND		0.50	0.071	ug/L	1
1,1-Dichloroethane	75-34-3	8260B	ND		0.50	0.054	ug/L	1
1,2-Dichloroethane	107-06-2	8260B	ND		0.50	0.023	ug/L	1
trans-1,2-Dichloroethene	156-60-5	8260B	ND		0.50	0.079	ug/L	1
1,1-Dichloroethene	75-35-4	8260B	ND		0.50	0.094	ug/L	1
cis-1,2-Dichloroethene	156-59-2	8260B	ND		0.50	0.087	ug/L	1
1,2-Dichloropropane	78-87-5	8260B	ND		0.50	0.081	ug/L	1
trans-1,3-Dichloropropene	10061-02-6	8260B	ND		0.50	0.18	ug/L	1
cis-1,3-Dichloropropene	10061-01-5	8260B	ND		0.50	0.090	ug/L	1
Ethylbenzene	100-41-4	8260B	ND		0.50	0.17	ug/L	1
2-Hexanone	591-78-6	8260B	0.28	J	10	0.27	ug/L	1
Isopropylbenzene	98-82-8	8260B	ND		0.50	0.029	ug/L	1
Methyl acetate	79-20-9	8260B	ND		1.0	0.30	ug/L	1
Methyl tertiary butyl ether (MTBE)	1634-04-4	8260B	ND		0.50	0.019	ug/L	1
4-Methyl-2-pentanone	108-10-1	8260B	ND		10	0.31	ug/L	1
Methylcyclohexane	108-87-2	8260B	ND		5.0	0.95	ug/L	1
Methylene chloride	75-09-2	8260B	ND		0.50	0.17	ug/L	1
Styrene	100-42-5	8260B	ND		0.50	0.015	ug/L	1
1,1,2,2-Tetrachloroethane	79-34-5	8260B	ND		0.50	0.013	ug/L	1
Tetrachloroethene	127-18-4	8260B	0.11	J	0.50	0.014	ug/L	1
Toluene	108-88-3	8260B	1.0		0.50	0.17	ug/L	1
1,1,2-Trichloro-1,2,2-Trifluoroethane	76-13-1	8260B	ND		0.50	0.30	ug/L	1
1,2,4-Trichlorobenzene	120-82-1	8260B	ND		0.50	0.17	ug/L	1
1,1,1-Trichloroethane	71-55-6	8260B	ND		0.50	0.029	ug/L	1
1,1,2-Trichloroethane	79-00-5	8260B	ND		0.50	0.031	ug/L	1

PQL = Practical quantitation limit
B = Detected in the method blank
E = Quantitation of compound exceeded the calibration range
ND = Not detected at or above the MDL
J = Estimated result < PQL and ≥ MDL
P = The RPD between two GC columns exceeds 40%
Where applicable, all soil sample analysis are reported on a dry weight basis unless flagged with a "W"
N = Recovery is out of criteria
H = Out of holding time

Volatile Organic Compounds by GC/MS

Client: ARCADIS U.S., Inc.
Laboratory ID: LK11004-011
Description: E-10 (36-40)
Matrix: Aqueous
Date Sampled: 11/10/2010 1245
Date Received: 11/11/2010

Run	Prep Method	Analytical Method	Dilution	Analysis Date	Analyst	Prep Date	Batch
1	5030B	8260B	1	11/14/2010 0021	DLB		46566

Parameter	CAS Number	Analytical Method	Result	Q	PQL	MDL	Units	Run
Trichloroethene	79-01-6	8260B	ND		0.50	0.024	ug/L	1
Trichlorofluoromethane	75-69-4	8260B	ND		0.50	0.051	ug/L	1
Vinyl chloride	75-01-4	8260B	ND		0.50	0.065	ug/L	1
Xylenes (total)	1330-20-7	8260B	0.75		0.50	0.17	ug/L	1

Surrogate	Q	Run 1 % Recovery	Acceptance Limits
1,2-Dichloroethane-d4		96	70-130
Bromofluorobenzene		113	70-130
Toluene-d8		104	70-130

PQL = Practical quantitation limit
B = Detected in the method blank
E = Quantitation of compound exceeded the calibration range
ND = Not detected at or above the MDL
J = Estimated result < PQL and ≥ MDL
P = The RPD between two GC columns exceeds 40%
Where applicable, all soil sample analysis are reported on a dry weight basis unless flagged with a "W"
N = Recovery is out of criteria
H = Out of holding time

Volatile Organic Compounds by GC/MS

Client: ARCADIS U.S., Inc.
Laboratory ID: LK11004-012
Description: E-10 (42-46)
Matrix: Aqueous
Date Sampled: 11/10/2010 1315
Date Received: 11/11/2010

Run	Prep Method	Analytical Method	Dilution	Analysis Date	Analyst	Prep Date	Batch
1	5030B	8260B	1	11/14/2010 0043	DLB		46566

Parameter	CAS Number	Analytical Method	Result	Q	PQL	MDL	Units	Run
Acetone	67-64-1	8260B	16		10	3.3	ug/L	1
Benzene	71-43-2	8260B	0.36	J	0.50	0.027	ug/L	1
Bromodichloromethane	75-27-4	8260B	ND		0.50	0.17	ug/L	1
Bromoform	75-25-2	8260B	ND		0.50	0.010	ug/L	1
Bromomethane (Methyl bromide)	74-83-9	8260B	ND		0.50	0.20	ug/L	1
2-Butanone (MEK)	78-93-3	8260B	3.2	J	10	2.0	ug/L	1
Carbon disulfide	75-15-0	8260B	ND		0.50	0.097	ug/L	1
Carbon tetrachloride	56-23-5	8260B	ND		0.50	0.085	ug/L	1
Chlorobenzene	108-90-7	8260B	ND		0.50	0.17	ug/L	1
Chloroethane	75-00-3	8260B	ND		0.50	0.17	ug/L	1
Chloroform	67-66-3	8260B	ND		0.50	0.17	ug/L	1
Chloromethane (Methyl chloride)	74-87-3	8260B	ND		0.50	0.17	ug/L	1
Cyclohexane	110-82-7	8260B	ND		0.50	0.30	ug/L	1
1,2-Dibromo-3-chloropropane (DBCP)	96-12-8	8260B	ND		0.50	0.069	ug/L	1
Dibromochloromethane	124-48-1	8260B	ND		0.50	0.17	ug/L	1
1,2-Dibromoethane (EDB)	106-93-4	8260B	ND		0.50	0.061	ug/L	1
1,3-Dichlorobenzene	541-73-1	8260B	ND		0.50	0.17	ug/L	1
1,2-Dichlorobenzene	95-50-1	8260B	ND		0.50	0.17	ug/L	1
1,4-Dichlorobenzene	106-46-7	8260B	ND		0.50	0.17	ug/L	1
Dichlorodifluoromethane	75-71-8	8260B	ND		0.50	0.071	ug/L	1
1,1-Dichloroethane	75-34-3	8260B	ND		0.50	0.054	ug/L	1
1,2-Dichloroethane	107-06-2	8260B	ND		0.50	0.023	ug/L	1
trans-1,2-Dichloroethene	156-60-5	8260B	ND		0.50	0.079	ug/L	1
1,1-Dichloroethene	75-35-4	8260B	ND		0.50	0.094	ug/L	1
cis-1,2-Dichloroethene	156-59-2	8260B	ND		0.50	0.087	ug/L	1
1,2-Dichloropropane	78-87-5	8260B	ND		0.50	0.081	ug/L	1
trans-1,3-Dichloropropene	10061-02-6	8260B	ND		0.50	0.18	ug/L	1
cis-1,3-Dichloropropene	10061-01-5	8260B	ND		0.50	0.090	ug/L	1
Ethylbenzene	100-41-4	8260B	ND		0.50	0.17	ug/L	1
2-Hexanone	591-78-6	8260B	0.41	J	10	0.27	ug/L	1
Isopropylbenzene	98-82-8	8260B	ND		0.50	0.029	ug/L	1
Methyl acetate	79-20-9	8260B	ND		1.0	0.30	ug/L	1
Methyl tertiary butyl ether (MTBE)	1634-04-4	8260B	ND		0.50	0.019	ug/L	1
4-Methyl-2-pentanone	108-10-1	8260B	ND		10	0.31	ug/L	1
Methylcyclohexane	108-87-2	8260B	ND		5.0	0.95	ug/L	1
Methylene chloride	75-09-2	8260B	0.84		0.50	0.17	ug/L	1
Styrene	100-42-5	8260B	ND		0.50	0.015	ug/L	1
1,1,2,2-Tetrachloroethane	79-34-5	8260B	ND		0.50	0.013	ug/L	1
Tetrachloroethene	127-18-4	8260B	0.12	J	0.50	0.014	ug/L	1
Toluene	108-88-3	8260B	0.78		0.50	0.17	ug/L	1
1,1,2-Trichloro-1,2,2-Trifluoroethane	76-13-1	8260B	ND		0.50	0.30	ug/L	1
1,2,4-Trichlorobenzene	120-82-1	8260B	ND		0.50	0.17	ug/L	1
1,1,1-Trichloroethane	71-55-6	8260B	ND		0.50	0.029	ug/L	1
1,1,2-Trichloroethane	79-00-5	8260B	ND		0.50	0.031	ug/L	1

PQL = Practical quantitation limit
B = Detected in the method blank
E = Quantitation of compound exceeded the calibration range
ND = Not detected at or above the MDL
J = Estimated result < PQL and ≥ MDL
P = The RPD between two GC columns exceeds 40%
Where applicable, all soil sample analysis are reported on a dry weight basis unless flagged with a "W"
N = Recovery is out of criteria
H = Out of holding time

Volatile Organic Compounds by GC/MS

Client: ARCADIS U.S., Inc.
Laboratory ID: LK11004-012
Description: E-10 (42-46)
Matrix: Aqueous
Date Sampled: 11/10/2010 1315
Date Received: 11/11/2010

Run	Prep Method	Analytical Method	Dilution	Analysis Date	Analyst	Prep Date	Batch
1	5030B	8260B	1	11/14/2010 0043	DLB		46566

Parameter	CAS Number	Analytical Method	Result	Q	PQL	MDL	Units	Run
Trichloroethene	79-01-6	8260B	ND		0.50	0.024	ug/L	1
Trichlorofluoromethane	75-69-4	8260B	ND		0.50	0.051	ug/L	1
Vinyl chloride	75-01-4	8260B	ND		0.50	0.065	ug/L	1
Xylenes (total)	1330-20-7	8260B	0.61		0.50	0.17	ug/L	1

Surrogate	Q	Run 1 % Recovery	Acceptance Limits
1,2-Dichloroethane-d4		95	70-130
Bromofluorobenzene		111	70-130
Toluene-d8		103	70-130

PQL = Practical quantitation limit
B = Detected in the method blank
E = Quantitation of compound exceeded the calibration range
ND = Not detected at or above the MDL
J = Estimated result < PQL and ≥ MDL
P = The RPD between two GC columns exceeds 40%
Where applicable, all soil sample analysis are reported on a dry weight basis unless flagged with a "W"
N = Recovery is out of criteria
H = Out of holding time

QC Summary

Volatile Organic Compounds by GC/MS - MB

Sample ID: LQ46389-001
Batch: 46389
Analytical Method: 8260B

Matrix: Aqueous
Prep Method: 5030B

Parameter	Result	Q	Dil	PQL	MDL	Units	Analysis Date
Acetone	ND		1	10	3.3	ug/L	11/11/2010 1610
Benzene	ND		1	0.50	0.027	ug/L	11/11/2010 1610
Bromodichloromethane	ND		1	0.50	0.17	ug/L	11/11/2010 1610
Bromoform	ND		1	0.50	0.010	ug/L	11/11/2010 1610
Bromomethane (Methyl bromide)	ND		1	0.50	0.20	ug/L	11/11/2010 1610
2-Butanone (MEK)	ND		1	10	2.0	ug/L	11/11/2010 1610
Carbon disulfide	ND		1	0.50	0.097	ug/L	11/11/2010 1610
Carbon tetrachloride	ND		1	0.50	0.085	ug/L	11/11/2010 1610
Chlorobenzene	ND		1	0.50	0.17	ug/L	11/11/2010 1610
Chloroethane	ND		1	0.50	0.17	ug/L	11/11/2010 1610
Chloroform	ND		1	0.50	0.17	ug/L	11/11/2010 1610
Chloromethane (Methyl chloride)	ND		1	0.50	0.17	ug/L	11/11/2010 1610
Cyclohexane	ND		1	0.50	0.30	ug/L	11/11/2010 1610
1,2-Dibromo-3-chloropropane (DBCP)	ND		1	0.50	0.069	ug/L	11/11/2010 1610
Dibromochloromethane	ND		1	0.50	0.17	ug/L	11/11/2010 1610
1,2-Dibromoethane (EDB)	ND		1	0.50	0.061	ug/L	11/11/2010 1610
1,4-Dichlorobenzene	ND		1	0.50	0.17	ug/L	11/11/2010 1610
1,2-Dichlorobenzene	ND		1	0.50	0.17	ug/L	11/11/2010 1610
1,3-Dichlorobenzene	ND		1	0.50	0.17	ug/L	11/11/2010 1610
Dichlorodifluoromethane	ND		1	0.50	0.071	ug/L	11/11/2010 1610
1,1-Dichloroethane	ND		1	0.50	0.054	ug/L	11/11/2010 1610
1,2-Dichloroethane	ND		1	0.50	0.023	ug/L	11/11/2010 1610
trans-1,2-Dichloroethene	ND		1	0.50	0.079	ug/L	11/11/2010 1610
1,1-Dichloroethene	ND		1	0.50	0.094	ug/L	11/11/2010 1610
cis-1,2-Dichloroethene	ND		1	0.50	0.087	ug/L	11/11/2010 1610
1,2-Dichloropropane	ND		1	0.50	0.081	ug/L	11/11/2010 1610
trans-1,3-Dichloropropene	ND		1	0.50	0.18	ug/L	11/11/2010 1610
cis-1,3-Dichloropropene	ND		1	0.50	0.090	ug/L	11/11/2010 1610
Ethylbenzene	ND		1	0.50	0.17	ug/L	11/11/2010 1610
2-Hexanone	ND		1	10	0.27	ug/L	11/11/2010 1610
Isopropylbenzene	ND		1	0.50	0.029	ug/L	11/11/2010 1610
Methyl acetate	ND		1	1.0	0.30	ug/L	11/11/2010 1610
Methyl tertiary butyl ether (MTBE)	ND		1	0.50	0.019	ug/L	11/11/2010 1610
4-Methyl-2-pentanone	ND		1	10	0.31	ug/L	11/11/2010 1610
Methylcyclohexane	ND		1	5.0	0.95	ug/L	11/11/2010 1610
Methylene chloride	ND		1	0.50	0.17	ug/L	11/11/2010 1610
Styrene	ND		1	0.50	0.015	ug/L	11/11/2010 1610
1,1,2,2-Tetrachloroethane	ND		1	0.50	0.013	ug/L	11/11/2010 1610
Tetrachloroethene	ND		1	0.50	0.014	ug/L	11/11/2010 1610
Toluene	ND		1	0.50	0.17	ug/L	11/11/2010 1610
1,1,2-Trichloro-1,2,2-Trifluoroethane	ND		1	0.50	0.30	ug/L	11/11/2010 1610
1,2,4-Trichlorobenzene	ND		1	0.50	0.17	ug/L	11/11/2010 1610
1,1,2-Trichloroethane	ND		1	0.50	0.031	ug/L	11/11/2010 1610
1,1,1-Trichloroethane	ND		1	0.50	0.029	ug/L	11/11/2010 1610

PQL = Practical quantitation limit
ND = Not detected at or above the MDL
P = The RPD between two GC columns exceeds 40%
J = Estimated result < PQL and ≥ MDL
N - Recovery is out of criteria
+ - RPD is out of criteria

Where applicable, all soil sample analysis are reported on a dry weight basis unless flagged with a "W"

Note: Calculations are performed before rounding to avoid round-off errors in calculated results

Volatile Organic Compounds by GC/MS - MB

Sample ID: LQ46389-001
Batch: 46389
Analytical Method: 8260B

Matrix: Aqueous
Prep Method: 5030B

Parameter	Result	Q	Dil	PQL	MDL	Units	Analysis Date
Trichloroethene	ND		1	0.50	0.024	ug/L	11/11/2010 1610
Trichlorofluoromethane	ND		1	0.50	0.051	ug/L	11/11/2010 1610
Vinyl chloride	ND		1	0.50	0.065	ug/L	11/11/2010 1610
Xylenes (total)	ND		1	0.50	0.17	ug/L	11/11/2010 1610

Surrogate	Q	% Rec	Acceptance Limit
Bromofluorobenzene		96	70-130
1,2-Dichloroethane-d4		96	70-130
Toluene-d8		107	70-130

PQL = Practical quantitation limit
ND = Not detected at or above the MDL
P = The RPD between two GC columns exceeds 40%
J = Estimated result < PQL and ≥ MDL
N - Recovery is out of criteria
+ - RPD is out of criteria

Where applicable, all soil sample analysis are reported on a dry weight basis unless flagged with a "W"

Note: Calculations are performed before rounding to avoid round-off errors in calculated results

Volatile Organic Compounds by GC/MS - LCS

Sample ID: LQ46389-002
Batch: 46389
Analytical Method: 8260B

Matrix: Aqueous
Prep Method: 5030B

Parameter	Spike Amount (ug/L)	Result (ug/L)	Q	Dil	% Rec	% Rec Limit	Analysis Date
Acetone	100	110		1	115	46-153	11/11/2010 1436
Benzene	50	53		1	107	70-130	11/11/2010 1436
Bromodichloromethane	50	49		1	97	70-130	11/11/2010 1436
Bromoform	50	39		1	78	70-130	11/11/2010 1436
Bromomethane (Methyl bromide)	50	43		1	86	60-140	11/11/2010 1436
2-Butanone (MEK)	100	120		1	116	60-140	11/11/2010 1436
Carbon disulfide	50	53		1	106	60-140	11/11/2010 1436
Carbon tetrachloride	50	50		1	100	70-130	11/11/2010 1436
Chlorobenzene	50	49		1	99	70-130	11/11/2010 1436
Chloroethane	50	45		1	90	42-163	11/11/2010 1436
Chloroform	50	54		1	108	70-130	11/11/2010 1436
Chloromethane (Methyl chloride)	50	48		1	97	20-158	11/11/2010 1436
Cyclohexane	50	55		1	110	70-130	11/11/2010 1436
1,2-Dibromo-3-chloropropane (DBCP)	50	47		1	93	70-130	11/11/2010 1436
Dibromochloromethane	50	46		1	92	70-130	11/11/2010 1436
1,2-Dibromoethane (EDB)	50	50		1	100	70-130	11/11/2010 1436
1,4-Dichlorobenzene	50	50		1	100	70-130	11/11/2010 1436
1,2-Dichlorobenzene	50	51		1	103	70-130	11/11/2010 1436
1,3-Dichlorobenzene	50	51		1	103	70-130	11/11/2010 1436
Dichlorodifluoromethane	50	50		1	101	60-140	11/11/2010 1436
1,1-Dichloroethane	50	56		1	112	70-130	11/11/2010 1436
1,2-Dichloroethane	50	53		1	106	70-130	11/11/2010 1436
trans-1,2-Dichloroethene	50	57		1	114	70-130	11/11/2010 1436
1,1-Dichloroethene	50	52		1	104	70-130	11/11/2010 1436
cis-1,2-Dichloroethene	50	57		1	114	70-130	11/11/2010 1436
1,2-Dichloropropane	50	54		1	108	70-130	11/11/2010 1436
trans-1,3-Dichloropropene	50	46		1	92	70-130	11/11/2010 1436
cis-1,3-Dichloropropene	50	49		1	99	70-130	11/11/2010 1436
Ethylbenzene	50	51		1	102	70-130	11/11/2010 1436
2-Hexanone	100	94		1	94	60-140	11/11/2010 1436
Isopropylbenzene	50	56		1	111	70-130	11/11/2010 1436
Methyl acetate	50	52		1	104	15-128	11/11/2010 1436
Methyl tertiary butyl ether (MTBE)	50	55		1	109	70-130	11/11/2010 1436
4-Methyl-2-pentanone	100	110		1	106	60-140	11/11/2010 1436
Methylcyclohexane	50	51		1	103	70-130	11/11/2010 1436
Methylene chloride	50	51		1	102	70-130	11/11/2010 1436
Styrene	50	48		1	97	70-130	11/11/2010 1436
1,1,2,2-Tetrachloroethane	50	58		1	117	70-130	11/11/2010 1436
Tetrachloroethene	50	46		1	92	70-130	11/11/2010 1436
Toluene	50	54		1	108	70-130	11/11/2010 1436
1,1,2-Trichloro-1,2,2-Trifluoroethane	50	59		1	118	70-130	11/11/2010 1436
1,2,4-Trichlorobenzene	50	45		1	91	70-130	11/11/2010 1436
1,1,2-Trichloroethane	50	50		1	101	70-130	11/11/2010 1436
1,1,1-Trichloroethane	50	53		1	105	70-130	11/11/2010 1436

PQL = Practical quantitation limit
ND = Not detected at or above the MDL
P = The RPD between two GC columns exceeds 40%
J = Estimated result < PQL and ≥ MDL
N - Recovery is out of criteria
+ - RPD is out of criteria

Where applicable, all soil sample analysis are reported on a dry weight basis unless flagged with a "W"

Note: Calculations are performed before rounding to avoid round-off errors in calculated results

Volatile Organic Compounds by GC/MS - LCS

Sample ID: LQ46389-002
Batch: 46389
Analytical Method: 8260B

Matrix: Aqueous
Prep Method: 5030B

Parameter	Spike Amount (ug/L)	Result (ug/L)	Q	Dil	% Rec	% Rec Limit	Analysis Date
Trichloroethene	50	47		1	94	70-130	11/11/2010 1436
Trichlorofluoromethane	50	43		1	86	60-140	11/11/2010 1436
Vinyl chloride	50	45		1	90	60-140	11/11/2010 1436
Xylenes (total)	100	100		1	101	70-130	11/11/2010 1436

Surrogate	Q	% Rec	Acceptance Limit
Bromofluorobenzene		101	70-130
1,2-Dichloroethane-d4		90	70-130
Toluene-d8		113	70-130

PQL = Practical quantitation limit
ND = Not detected at or above the MDL
P = The RPD between two GC columns exceeds 40%
J = Estimated result < PQL and ≥ MDL
N - Recovery is out of criteria
+ - RPD is out of criteria

Where applicable, all soil sample analysis are reported on a dry weight basis unless flagged with a "W"

Note: Calculations are performed before rounding to avoid round-off errors in calculated results

Volatile Organic Compounds by GC/MS - LCSD

Sample ID: LQ46389-003
Batch: 46389
Analytical Method: 8260B

Matrix: Aqueous
Prep Method: 5030B

Parameter	Spike Amount (ug/L)	Result (ug/L)	Q	Dil	% Rec	% RPD	% Rec Limit	% RPD Limit	Analysis Date
Acetone	100	110		1	106	8.2	46-153	20	11/11/2010 1459
Benzene	50	47		1	93	13	70-130	20	11/11/2010 1459
Bromodichloromethane	50	50		1	100	2.9	70-130	20	11/11/2010 1459
Bromoform	50	40		1	80	2.0	70-130	20	11/11/2010 1459
Bromomethane (Methyl bromide)	50	44		1	88	1.7	60-140	20	11/11/2010 1459
2-Butanone (MEK)	100	88	+	1	88	27	60-140	20	11/11/2010 1459
Carbon disulfide	50	41	+	1	82	25	60-140	20	11/11/2010 1459
Carbon tetrachloride	50	51		1	101	1.7	70-130	20	11/11/2010 1459
Chlorobenzene	50	50		1	100	0.93	70-130	20	11/11/2010 1459
Chloroethane	50	44		1	88	2.4	42-163	20	11/11/2010 1459
Chloroform	50	47		1	95	13	70-130	20	11/11/2010 1459
Chloromethane (Methyl chloride)	50	50		1	100	3.7	20-158	20	11/11/2010 1459
Cyclohexane	50	42	+	1	84	27	70-130	20	11/11/2010 1459
1,2-Dibromo-3-chloropropane (DBCP)	50	46		1	93	0.61	70-130	20	11/11/2010 1459
Dibromochloromethane	50	46		1	92	0.61	70-130	20	11/11/2010 1459
1,2-Dibromoethane (EDB)	50	52		1	103	2.8	70-130	20	11/11/2010 1459
1,4-Dichlorobenzene	50	50		1	100	0.48	70-130	20	11/11/2010 1459
1,2-Dichlorobenzene	50	52		1	103	0.48	70-130	20	11/11/2010 1459
1,3-Dichlorobenzene	50	52		1	105	1.8	70-130	20	11/11/2010 1459
Dichlorodifluoromethane	50	54		1	107	6.4	60-140	20	11/11/2010 1459
1,1-Dichloroethane	50	44	+	1	88	24	70-130	20	11/11/2010 1459
1,2-Dichloroethane	50	52		1	104	1.5	70-130	20	11/11/2010 1459
trans-1,2-Dichloroethene	50	44	+	1	88	25	70-130	20	11/11/2010 1459
1,1-Dichloroethene	50	44		1	88	17	70-130	20	11/11/2010 1459
cis-1,2-Dichloroethene	50	45	+	1	91	23	70-130	20	11/11/2010 1459
1,2-Dichloropropane	50	52		1	104	3.9	70-130	20	11/11/2010 1459
trans-1,3-Dichloropropene	50	46		1	93	0.76	70-130	20	11/11/2010 1459
cis-1,3-Dichloropropene	50	51		1	103	4.4	70-130	20	11/11/2010 1459
Ethylbenzene	50	52		1	104	1.6	70-130	20	11/11/2010 1459
2-Hexanone	100	100		1	104	10	60-140	20	11/11/2010 1459
Isopropylbenzene	50	55		1	109	2.0	70-130	20	11/11/2010 1459
Methyl acetate	50	41	+	1	82	23	15-128	20	11/11/2010 1459
Methyl tertiary butyl ether (MTBE)	50	44	+	1	88	21	70-130	20	11/11/2010 1459
4-Methyl-2-pentanone	100	110		1	109	3.0	60-140	20	11/11/2010 1459
Methylcyclohexane	50	53		1	105	2.8	70-130	20	11/11/2010 1459
Methylene chloride	50	39	+	1	78	26	70-130	20	11/11/2010 1459
Styrene	50	49		1	98	1.4	70-130	20	11/11/2010 1459
1,1,2,2-Tetrachloroethane	50	55		1	110	5.7	70-130	20	11/11/2010 1459
Tetrachloroethene	50	46		1	92	0.50	70-130	20	11/11/2010 1459
Toluene	50	55		1	110	2.1	70-130	20	11/11/2010 1459
1,1,2-Trichloro-1,2,2-Trifluoroethane	50	51		1	101	15	70-130	20	11/11/2010 1459
1,2,4-Trichlorobenzene	50	45		1	90	0.83	70-130	20	11/11/2010 1459
1,1,2-Trichloroethane	50	51		1	101	0.29	70-130	20	11/11/2010 1459
1,1,1-Trichloroethane	50	51		1	101	3.6	70-130	20	11/11/2010 1459

PQL = Practical quantitation limit
ND = Not detected at or above the MDL
P = The RPD between two GC columns exceeds 40%
J = Estimated result < PQL and ≥ MDL
N - Recovery is out of criteria
+ - RPD is out of criteria

Where applicable, all soil sample analysis are reported on a dry weight basis unless flagged with a "W"

Note: Calculations are performed before rounding to avoid round-off errors in calculated results

Volatile Organic Compounds by GC/MS - LCSD

Sample ID: LQ46389-003
Batch: 46389
Analytical Method: 8260B

Matrix: Aqueous
Prep Method: 5030B

Parameter	Spike Amount (ug/L)	Result (ug/L)	Q	Dil	% Rec	% RPD	% Rec Limit	% RPD Limit	Analysis Date
Trichloroethene	50	50		1	99	5.2	70-130	20	11/11/2010 1459
Trichlorofluoromethane	50	43		1	87	0.55	60-140	20	11/11/2010 1459
Vinyl chloride	50	47		1	93	3.8	60-140	20	11/11/2010 1459
Xylenes (total)	100	100		1	102	1.3	70-130	20	11/11/2010 1459

Surrogate	Q	% Rec	Acceptance Limit
Bromofluorobenzene		103	70-130
1,2-Dichloroethane-d4		85	70-130
Toluene-d8		115	70-130

PQL = Practical quantitation limit
ND = Not detected at or above the MDL
P = The RPD between two GC columns exceeds 40%
J = Estimated result < PQL and ≥ MDL
N - Recovery is out of criteria
+ - RPD is out of criteria

Where applicable, all soil sample analysis are reported on a dry weight basis unless flagged with a "W"

Note: Calculations are performed before rounding to avoid round-off errors in calculated results

Volatile Organic Compounds by GC/MS - MB

Sample ID: LQ46566-001
Batch: 46566
Analytical Method: 8260B

Matrix: Aqueous
Prep Method: 5030B

Parameter	Result	Q	Dil	PQL	MDL	Units	Analysis Date
Acetone	ND		1	10	3.3	ug/L	11/13/2010 1952
Benzene	ND		1	0.50	0.027	ug/L	11/13/2010 1952
Bromodichloromethane	ND		1	0.50	0.17	ug/L	11/13/2010 1952
Bromoform	ND		1	0.50	0.010	ug/L	11/13/2010 1952
Bromomethane (Methyl bromide)	ND		1	0.50	0.20	ug/L	11/13/2010 1952
2-Butanone (MEK)	ND		1	10	2.0	ug/L	11/13/2010 1952
Carbon disulfide	ND		1	0.50	0.097	ug/L	11/13/2010 1952
Carbon tetrachloride	ND		1	0.50	0.085	ug/L	11/13/2010 1952
Chlorobenzene	ND		1	0.50	0.17	ug/L	11/13/2010 1952
Chloroethane	ND		1	0.50	0.17	ug/L	11/13/2010 1952
Chloroform	ND		1	0.50	0.17	ug/L	11/13/2010 1952
Chloromethane (Methyl chloride)	ND		1	0.50	0.17	ug/L	11/13/2010 1952
Cyclohexane	ND		1	0.50	0.30	ug/L	11/13/2010 1952
1,2-Dibromo-3-chloropropane (DBCP)	ND		1	0.50	0.069	ug/L	11/13/2010 1952
Dibromochloromethane	ND		1	0.50	0.17	ug/L	11/13/2010 1952
1,2-Dibromoethane (EDB)	ND		1	0.50	0.061	ug/L	11/13/2010 1952
1,4-Dichlorobenzene	ND		1	0.50	0.17	ug/L	11/13/2010 1952
1,2-Dichlorobenzene	ND		1	0.50	0.17	ug/L	11/13/2010 1952
1,3-Dichlorobenzene	ND		1	0.50	0.17	ug/L	11/13/2010 1952
Dichlorodifluoromethane	ND		1	0.50	0.071	ug/L	11/13/2010 1952
1,2-Dichloroethane	ND		1	0.50	0.023	ug/L	11/13/2010 1952
1,1-Dichloroethane	ND		1	0.50	0.054	ug/L	11/13/2010 1952
cis-1,2-Dichloroethene	ND		1	0.50	0.087	ug/L	11/13/2010 1952
1,1-Dichloroethene	ND		1	0.50	0.094	ug/L	11/13/2010 1952
trans-1,2-Dichloroethene	ND		1	0.50	0.079	ug/L	11/13/2010 1952
1,2-Dichloropropane	ND		1	0.50	0.081	ug/L	11/13/2010 1952
cis-1,3-Dichloropropene	ND		1	0.50	0.090	ug/L	11/13/2010 1952
trans-1,3-Dichloropropene	ND		1	0.50	0.18	ug/L	11/13/2010 1952
Ethylbenzene	ND		1	0.50	0.17	ug/L	11/13/2010 1952
2-Hexanone	ND		1	10	0.27	ug/L	11/13/2010 1952
Isopropylbenzene	ND		1	0.50	0.029	ug/L	11/13/2010 1952
Methyl acetate	ND		1	1.0	0.30	ug/L	11/13/2010 1952
Methyl tertiary butyl ether (MTBE)	ND		1	0.50	0.019	ug/L	11/13/2010 1952
4-Methyl-2-pentanone	ND		1	10	0.31	ug/L	11/13/2010 1952
Methylcyclohexane	ND		1	5.0	0.95	ug/L	11/13/2010 1952
Methylene chloride	ND		1	0.50	0.17	ug/L	11/13/2010 1952
Styrene	ND		1	0.50	0.015	ug/L	11/13/2010 1952
1,1,2,2-Tetrachloroethane	ND		1	0.50	0.013	ug/L	11/13/2010 1952
Tetrachloroethene	ND		1	0.50	0.014	ug/L	11/13/2010 1952
Toluene	ND		1	0.50	0.17	ug/L	11/13/2010 1952
1,1,2-Trichloro-1,2,2-Trifluoroethane	ND		1	0.50	0.30	ug/L	11/13/2010 1952
1,2,4-Trichlorobenzene	ND		1	0.50	0.17	ug/L	11/13/2010 1952
1,1,2-Trichloroethane	ND		1	0.50	0.031	ug/L	11/13/2010 1952
1,1,1-Trichloroethane	ND		1	0.50	0.029	ug/L	11/13/2010 1952

PQL = Practical quantitation limit
ND = Not detected at or above the MDL
P = The RPD between two GC columns exceeds 40%
J = Estimated result < PQL and ≥ MDL
N - Recovery is out of criteria
+ - RPD is out of criteria

Where applicable, all soil sample analysis are reported on a dry weight basis unless flagged with a "W"

Note: Calculations are performed before rounding to avoid round-off errors in calculated results

Volatile Organic Compounds by GC/MS - MB

Sample ID: LQ46566-001
Batch: 46566
Analytical Method: 8260B

Matrix: Aqueous
Prep Method: 5030B

Parameter	Result	Q	Dil	PQL	MDL	Units	Analysis Date
Trichloroethene	ND		1	0.50	0.024	ug/L	11/13/2010 1952
Trichlorofluoromethane	ND		1	0.50	0.051	ug/L	11/13/2010 1952
Vinyl chloride	ND		1	0.50	0.065	ug/L	11/13/2010 1952
Xylenes (total)	ND		1	0.50	0.17	ug/L	11/13/2010 1952

Surrogate	Q	% Rec	Acceptance Limit
Bromofluorobenzene		116	70-130
1,2-Dichloroethane-d4		104	70-130
Toluene-d8		103	70-130

PQL = Practical quantitation limit
ND = Not detected at or above the MDL
P = The RPD between two GC columns exceeds 40%
J = Estimated result < PQL and ≥ MDL
N - Recovery is out of criteria
+ - RPD is out of criteria

Where applicable, all soil sample analysis are reported on a dry weight basis unless flagged with a "W"

Note: Calculations are performed before rounding to avoid round-off errors in calculated results

Volatile Organic Compounds by GC/MS - LCS

Sample ID: LQ46566-002
Batch: 46566
Analytical Method: 8260B

Matrix: Aqueous
Prep Method: 5030B

Parameter	Spike Amount (ug/L)	Result (ug/L)	Q	Dil	% Rec	% Rec Limit	Analysis Date
Acetone	100	120		1	115	46-153	11/13/2010 1826
Benzene	50	57		1	114	70-130	11/13/2010 1826
Bromodichloromethane	50	61		1	121	70-130	11/13/2010 1826
Bromoform	50	64		1	128	70-130	11/13/2010 1826
Bromomethane (Methyl bromide)	50	31		1	61	60-140	11/13/2010 1826
2-Butanone (MEK)	100	110		1	108	60-140	11/13/2010 1826
Carbon disulfide	50	67		1	134	60-140	11/13/2010 1826
Carbon tetrachloride	50	63		1	127	70-130	11/13/2010 1826
Chlorobenzene	50	57		1	115	70-130	11/13/2010 1826
Chloroethane	50	44		1	88	42-163	11/13/2010 1826
Chloroform	50	56		1	113	70-130	11/13/2010 1826
Chloromethane (Methyl chloride)	50	46		1	93	20-158	11/13/2010 1826
Cyclohexane	50	58		1	116	70-130	11/13/2010 1826
1,2-Dibromo-3-chloropropane (DBCP)	50	58		1	115	70-130	11/13/2010 1826
Dibromochloromethane	50	63		1	127	70-130	11/13/2010 1826
1,2-Dibromoethane (EDB)	50	60		1	120	70-130	11/13/2010 1826
1,4-Dichlorobenzene	50	56		1	112	70-130	11/13/2010 1826
1,2-Dichlorobenzene	50	57		1	113	70-130	11/13/2010 1826
1,3-Dichlorobenzene	50	57		1	114	70-130	11/13/2010 1826
Dichlorodifluoromethane	50	51		1	101	60-140	11/13/2010 1826
1,2-Dichloroethane	50	55		1	110	70-130	11/13/2010 1826
1,1-Dichloroethane	50	55		1	109	70-130	11/13/2010 1826
cis-1,2-Dichloroethene	50	57		1	114	70-130	11/13/2010 1826
1,1-Dichloroethene	50	59		1	117	70-130	11/13/2010 1826
trans-1,2-Dichloroethene	50	57		1	114	70-130	11/13/2010 1826
1,2-Dichloropropane	50	53		1	105	70-130	11/13/2010 1826
cis-1,3-Dichloropropene	50	59		1	118	70-130	11/13/2010 1826
trans-1,3-Dichloropropene	50	62		1	124	70-130	11/13/2010 1826
Ethylbenzene	50	60		1	119	70-130	11/13/2010 1826
2-Hexanone	100	130		1	127	60-140	11/13/2010 1826
Isopropylbenzene	50	64		1	129	70-130	11/13/2010 1826
Methyl acetate	50	64		1	128	15-128	11/13/2010 1826
Methyl tertiary butyl ether (MTBE)	50	57		1	115	70-130	11/13/2010 1826
4-Methyl-2-pentanone	100	120		1	121	60-140	11/13/2010 1826
Methylcyclohexane	50	58		1	117	70-130	11/13/2010 1826
Methylene chloride	50	53		1	106	70-130	11/13/2010 1826
Styrene	50	64		1	128	70-130	11/13/2010 1826
1,1,2,2-Tetrachloroethane	50	58		1	115	70-130	11/13/2010 1826
Tetrachloroethene	50	61		1	122	70-130	11/13/2010 1826
Toluene	50	58		1	116	70-130	11/13/2010 1826
1,1,2-Trichloro-1,2,2-Trifluoroethane	50	58		1	116	70-130	11/13/2010 1826
1,2,4-Trichlorobenzene	50	61		1	122	70-130	11/13/2010 1826
1,1,2-Trichloroethane	50	56		1	113	70-130	11/13/2010 1826
1,1,1-Trichloroethane	50	61		1	121	70-130	11/13/2010 1826

PQL = Practical quantitation limit
ND = Not detected at or above the MDL
P = The RPD between two GC columns exceeds 40%
J = Estimated result < PQL and ≥ MDL
N - Recovery is out of criteria
+ - RPD is out of criteria

Where applicable, all soil sample analysis are reported on a dry weight basis unless flagged with a "W"

Note: Calculations are performed before rounding to avoid round-off errors in calculated results

Volatile Organic Compounds by GC/MS - LCS

Sample ID: LQ46566-002
Batch: 46566
Analytical Method: 8260B

Matrix: Aqueous
Prep Method: 5030B

Parameter	Spike Amount (ug/L)	Result (ug/L)	Q	Dil	% Rec	% Rec Limit	Analysis Date
Trichloroethene	50	59		1	117	70-130	11/13/2010 1826
Trichlorofluoromethane	50	55		1	110	60-140	11/13/2010 1826
Vinyl chloride	50	40		1	79	60-140	11/13/2010 1826
Xylenes (total)	100	120		1	122	70-130	11/13/2010 1826

Surrogate	Q	% Rec	Acceptance Limit
Bromofluorobenzene		118	70-130
1,2-Dichloroethane-d4		106	70-130
Toluene-d8		109	70-130

PQL = Practical quantitation limit
ND = Not detected at or above the MDL
P = The RPD between two GC columns exceeds 40%
J = Estimated result < PQL and ≥ MDL
N - Recovery is out of criteria
+ - RPD is out of criteria

Where applicable, all soil sample analysis are reported on a dry weight basis unless flagged with a "W"

Note: Calculations are performed before rounding to avoid round-off errors in calculated results

Volatile Organic Compounds by GC/MS - LCSD

Sample ID: LQ46566-003
Batch: 46566
Analytical Method: 8260B

Matrix: Aqueous
Prep Method: 5030B

Parameter	Spike Amount (ug/L)	Result (ug/L)	Q	Dil	% Rec	% RPD	% Rec Limit	% RPD Limit	Analysis Date
Acetone	100	130		1	130	12	46-153	20	11/13/2010 1848
Benzene	50	59		1	118	3.3	70-130	20	11/13/2010 1848
Bromodichloromethane	50	54		1	108	12	70-130	20	11/13/2010 1848
Bromoform	50	57		1	113	12	70-130	20	11/13/2010 1848
Bromomethane (Methyl bromide)	50	35		1	70	13	60-140	20	11/13/2010 1848
2-Butanone (MEK)	100	110		1	113	5.0	60-140	20	11/13/2010 1848
Carbon disulfide	50	64		1	128	5.0	60-140	20	11/13/2010 1848
Carbon tetrachloride	50	58		1	116	8.9	70-130	20	11/13/2010 1848
Chlorobenzene	50	59		1	119	3.1	70-130	20	11/13/2010 1848
Chloroethane	50	46		1	92	5.2	42-163	20	11/13/2010 1848
Chloroform	50	60		1	119	5.6	70-130	20	11/13/2010 1848
Chloromethane (Methyl chloride)	50	52		1	103	11	20-158	20	11/13/2010 1848
Cyclohexane	50	62		1	125	7.4	70-130	20	11/13/2010 1848
1,2-Dibromo-3-chloropropane (DBCP)	50	59		1	118	2.6	70-130	20	11/13/2010 1848
Dibromochloromethane	50	56		1	112	13	70-130	20	11/13/2010 1848
1,2-Dibromoethane (EDB)	50	63		1	125	4.3	70-130	20	11/13/2010 1848
1,4-Dichlorobenzene	50	58		1	116	4.1	70-130	20	11/13/2010 1848
1,2-Dichlorobenzene	50	59		1	118	4.0	70-130	20	11/13/2010 1848
1,3-Dichlorobenzene	50	61		1	121	5.7	70-130	20	11/13/2010 1848
Dichlorodifluoromethane	50	55		1	109	7.5	60-140	20	11/13/2010 1848
1,2-Dichloroethane	50	60		1	120	8.5	70-130	20	11/13/2010 1848
1,1-Dichloroethane	50	56		1	113	3.2	70-130	20	11/13/2010 1848
cis-1,2-Dichloroethene	50	58		1	115	1.3	70-130	20	11/13/2010 1848
1,1-Dichloroethene	50	63		1	127	7.8	70-130	20	11/13/2010 1848
trans-1,2-Dichloroethene	50	59		1	117	2.8	70-130	20	11/13/2010 1848
1,2-Dichloropropane	50	55		1	109	3.5	70-130	20	11/13/2010 1848
cis-1,3-Dichloropropene	50	55		1	110	7.5	70-130	20	11/13/2010 1848
trans-1,3-Dichloropropene	50	58		1	116	7.1	70-130	20	11/13/2010 1848
Ethylbenzene	50	62		1	124	4.4	70-130	20	11/13/2010 1848
2-Hexanone	100	120		1	124	2.2	60-140	20	11/13/2010 1848
Isopropylbenzene	50	61		1	122	5.7	70-130	20	11/13/2010 1848
Methyl acetate	50	59		1	119	7.0	15-128	20	11/13/2010 1848
Methyl tertiary butyl ether (MTBE)	50	61		1	121	5.6	70-130	20	11/13/2010 1848
4-Methyl-2-pentanone	100	120		1	118	2.5	60-140	20	11/13/2010 1848
Methylcyclohexane	50	61		1	123	5.0	70-130	20	11/13/2010 1848
Methylene chloride	50	55		1	110	4.0	70-130	20	11/13/2010 1848
Styrene	50	61		1	122	4.6	70-130	20	11/13/2010 1848
1,1,2,2-Tetrachloroethane	50	60		1	120	4.2	70-130	20	11/13/2010 1848
Tetrachloroethene	50	64		1	128	4.5	70-130	20	11/13/2010 1848
Toluene	50	60		1	121	3.6	70-130	20	11/13/2010 1848
1,1,2-Trichloro-1,2,2-Trifluoroethane	50	63		1	127	8.5	70-130	20	11/13/2010 1848
1,2,4-Trichlorobenzene	50	63		1	126	3.7	70-130	20	11/13/2010 1848
1,1,2-Trichloroethane	50	60		1	119	5.7	70-130	20	11/13/2010 1848
1,1,1-Trichloroethane	50	64		1	129	5.9	70-130	20	11/13/2010 1848

PQL = Practical quantitation limit
ND = Not detected at or above the MDL
P = The RPD between two GC columns exceeds 40%
J = Estimated result < PQL and ≥ MDL
N - Recovery is out of criteria
+ - RPD is out of criteria

Where applicable, all soil sample analysis are reported on a dry weight basis unless flagged with a "W"

Note: Calculations are performed before rounding to avoid round-off errors in calculated results

Volatile Organic Compounds by GC/MS - LCSD

Sample ID: LQ46566-003
Batch: 46566
Analytical Method: 8260B

Matrix: Aqueous
Prep Method: 5030B

Parameter	Spike Amount (ug/L)	Result (ug/L)	Q	Dil	% Rec	% RPD	% Rec Limit	% RPD Limit	Analysis Date
Trichloroethene	50	62		1	124	5.7	70-130	20	11/13/2010 1848
Trichlorofluoromethane	50	61		1	122	11	60-140	20	11/13/2010 1848
Vinyl chloride	50	44		1	88	10	60-140	20	11/13/2010 1848
Xylenes (total)	100	130		1	126	3.2	70-130	20	11/13/2010 1848

Surrogate	Q	% Rec	Acceptance Limit
Bromofluorobenzene		118	70-130
1,2-Dichloroethane-d4		106	70-130
Toluene-d8		106	70-130

PQL = Practical quantitation limit
ND = Not detected at or above the MDL
P = The RPD between two GC columns exceeds 40%
J = Estimated result < PQL and ≥ MDL
N - Recovery is out of criteria
+ - RPD is out of criteria

Where applicable, all soil sample analysis are reported on a dry weight basis unless flagged with a "W"

Note: Calculations are performed before rounding to avoid round-off errors in calculated results

SHEALY ENVIRONMENTAL SERVICES, INC.

SHEALY Chain of Custody Record

SHEALY ENVIRONMENTAL SERVICES, INC.
106 Vantage Point Drive
West Columbia, South Carolina 29172
Telephone No. (803) 791-9700 Fax No. (803) 791-9111

Number 107611

Client: Arcadis	Report to Contact: Shelley Gibbons	Telephone No. / Fax No. / E-mail: 919-854-1282 / 919-854-5448 shelley.gibbons@arcadis-us.com	Quote No.
Address: 801 Corporate Center Dr. #300	Sampler's Signature: x [signature]	Waybill No.	Page 1 of 2
City: Raleigh; State: NC; Zip Code: 27607	Printed Name: Josh Frizzell	Analysis (Attach list if more space is needed.)	
Project Name: Fort Stewart F-39A			
Project No.: G-P08HAFS. F39A. DGOFI	P.O. No.		Lot No.: LK11004

Sample ID / Description (Containers for each sample may be combined on one line.)	Date	Time	G-Grab C-Composite	Aqueous	Solid	Non-Aqueous	Oxyces	H2SO4	HNO3	HCl	NaOH	SOS5 KI		VOCs 8260									Remarks / Cooler I.D.
E-8 (30-34)	11-9-2010	1350	G	X						X				3									24 Hr. TAT
E-8 (36-40)	11-9-2010	1420	G	X						X				3									24 Hr. TAT
E-8 (42-46)	11-9-2010	1500	G	X						X				3									24 Hr. TAT
B-6 (30-34)	11-9-2010	1630	G	X						X				3									~~Standard~~ 24 Hr. TAT
B-6 (36-40)	11-9-2010	1655	G	X						X				3									~~Standard~~ 24 Hr. TAT
E-9 (30-34)	11-10-2010	0930	G	X						X				3									24 Hr. TAT
E-9 (36-40)	11-10-2010	1010	G	X						X				3									
E-9 (42-46)	11-10-2010	1040	G	X						X				3									
E-10 (30-34)	11-10-2010	1215	G	X						X				3									
Trip Blank	—	—	-	X						X				2									

All samples 24 Hour TAT

Possible Hazard Identification: ☐ Non-Hazard ☐ Flammable ☐ Skin Irritant ☐ Poison ☒ Unknown

Sample Disposal: ☐ Return to Client ☒ Disposal by Lab

Note: All samples are retained for six weeks from receipt unless other arrangements are made.

Turn Around Time Required (Prior lab approval required for expedited TAT.): ~~Standard~~ ☐ Rush (Specify) 24 Hour TAT See Remarks

QC Requirements (Specify)

	Date	Time		Date	Time
1. Relinquished by: [signature]	11-10-10	1400	1. Received by		
2. Relinquished by:			2. Received by		
3. Relinquished by: FedEx	11/11/10	0840	3. Laboratory received by: [signature]	11/11/10	0840

Comments

LAB USE ONLY
Received on Ice (Circle) (Yes) No Ice Pack

Receipt Temp. 1.8 °C

DISTRIBUTION: WHITE & YELLOW-Return to laboratory with Sample(s); PINK-Field/Client Copy

Document Number: F-AD-012 Effective Date: 08-04-02

SHEALY ENVIRONMENTAL SERVICES, INC.

SHEALY ENVIRONMENTAL SERVICES, INC.

SHEALY Chain of Custody Record

SHEALY ENVIRONMENTAL SERVICES, INC.
106 Vantage Point Drive
West Columbia, South Carolina 29172
Telephone No. (803) 791-9700 Fax No. (803) 791-9111

Number 107613

Client: Arcadis	Report to Contact: Shelley Gibbons	Telephone No. / Fax No. / E-mail: 919-854-1282 / 919-854-5448 shelley.gibbons@arcadis-us.com	Quote No.
Address: 801 Corporate Center Dr. #300	Sampler's Signature: X	Waybill No.	Page 2 of 2
City: Raleigh; State: NC; Zip Code: 27607	Printed Name: Josh Frizzell	Analysis (Attach list if more space is needed.)	
Project Name: Fort Stewart F-39A			
Project No.: GP08HAFS.F39A.DG0FI	P.O. No.		Lot No.: LK11004

Sample ID / Description (Containers for each sample may be combined on one line.)	Date	Time	Grab/Composite	Aqueous	Solid	Non-Aqueous	Unpres.	H2SO4	HNO3	HCl	NaOH	SDS KI		VOCs 8260	Remarks / Cooler I.D.
E-10 (36-40)	11-10-2010	1245	G	X						3				X	
E-10 (42-46)	11-12-10	1315	G	X						3				X	

JDF 11/12/10

Possible Hazard Identification: ☐ Non-Hazard ☐ Flammable ☐ Skin Irritant ☐ Poison ☒ Unknown

Sample Disposal: ☐ Return to Client ☒ Disposal by Lab

Note: All samples are retained for six weeks from receipt unless other arrangements are made.

Turn Around Time Required (Prior lab approval required for expedited TAT.): ☐ Standard ☒ Rush (Specify) 24 Hour TAT

QC Requirements (Specify):

	Date	Time		Date	Time
1. Relinquished by	11-10-10		1. Received by		
2. Relinquished by			2. Received by		
3. Relinquished by	11/11/10	0840	3. Laboratory received by	11/11/10	0840

Comments:

LAB USE ONLY: Received on Ice (Circle) Yes No Ice Pack; Receipt Temp. 1.8 °C

DISTRIBUTION: WHITE & YELLOW-Return to laboratory with Sample(s); PINK-Field/Client Copy

Document Number: F-AD-012 Effective Date: 08-04-02

SHEALY ENVIRONMENTAL SERVICES, INC.

Shealy Environmental Services, Inc.
Document Number: F-AD-016
Revision Number: 6

Page 1 of 1
Replaces Date: 09/22/06
Effective Date: 05/29/07

Sample Receipt Checklist (SRC)

Client: Arcadis Cooler Inspected by/date: NMS/BKW 11/11/10 Lot #: LK11004

Means of receipt: ☐ SESI ☐ Client ☐ UPS ☑ FedEx ☐ Airborne Exp ☐ Other			
Yes ☑	No ☐	NA ☐	1. Were custody seals present on the cooler?
Yes ☐	No ☑	NA ☐	2. If custody seals were present, were they intact and unbroken?
Cooler ID/temperature upon receipt 1.8 °C / °C / °C / °C / °C / °C / °C / °C Method: ☐ Temperature Blank ☑ Against Bottles Method of coolant: ☑ Wet Ice ☐ Blue Ice ☐ Dry Ice ☐ None			
If response is No (or Yes for 14, 15, 16), an explanation/resolution must be provided.			
Yes ☐	No ☐	NA ☑	3. If temperature of any cooler exceeded 6.0°C, was Project Manager notified? PM notified by SRC, phone, note (circle one), other:_____. (For coolers received via commercial courier, PMs are to be notified immediately.
Yes ☑	No ☐	NA ☐	4. Is the commercial courier's packing slip attached to this form?
Yes ☑	No ☐	NA ☐	5. Were proper custody procedures (relinquished/received) followed?
Yes ☑	No ☐	NA ☐	6. Were sample IDs listed?
Yes ☑	No ☐	NA ☐	7. Was collection date & time listed?
Yes ☑	No ☐	NA ☐	8. Were tests to be performed listed on the COC or was quote # provided?
Yes ☑	No ☐	NA ☐	9. Did all samples arrive in the proper containers for each test?
Yes ☑	No ☐	NA ☐	10. Did all container label information (ID, date, time) agree with COC?
Yes ☑	No ☐	NA ☐	11. Did all containers arrive in good condition (unbroken, lids on, etc.)?
Yes ☑	No ☐	NA ☐	12. Was adequate sample volume available?
Yes ☑	No ☐	NA ☐	13. Were all samples received within ½ the holding time or 48 hours, whichever comes first?
Yes ☐	No ☑	NA ☐	14. Were any samples containers missing?
Yes ☑	No ☐	NA ☐	15. Were there any excess samples not listed on COC? TB
Yes ☑	No ☐	NA ☐	16. Were bubbles present >"pea-size" (¼"or 6mm in diameter) in any VOA vials?
Yes ☐	No ☐	NA ☑	17. Were all metals/O&G/HEM/nutrient samples received at a pH of <2?
Yes ☐	No ☐	NA ☑	18. Were all cyanide and/or sulfide samples received at a pH >12?
Yes ☐	No ☐	NA ☑	19. Were all applicable NH3/TKN/cyanide/phenol/BNA/pest/PCB/herb (<0.2mg/L) and toxicity (<0.1mg/L) samples free of residual chlorine?
Yes ☐	No ☐	NA ☑	20. Were collection temperatures documented on the COC for NC samples?

Sample Preservation (Must be completed for any sample(s) incorrectly preserved or with headspace.)

Sample(s)_____were received incorrectly preserved and were adjusted accordingly in sample receiving with _____(H_2SO_4,HNO_3,HCl,NaOH) with the SR # (number)

Sample(s) (3)-001, (3)-002, (1)-003, (3)-005 were received with bubbles >6 mm in diameter.

Sample(s) (3)-001, (3)-010, (3)-011 were received with TRC >0.2 mg/L for NH3/TKN/cyanide/BNA/pest/PCB/herb.

Toxicity sample(s)_____were received with TRC >0.1 mg/L and were analyzed by method 330.5.

Corrective Action taken, if necessary:

Was client notified: Yes ☐ No ☐ Did client respond: Yes ☐ No ☐

SESI employee: Date of response:

Comments:

Report of Analysis

ARCADIS U.S., Inc.
30 Patewood Drive
Suite 155
Greenville, SC 29615
Attention: Allison Fang

Project Name: Hunter Stewart F39A

Project Number: GP09HAFS.F39A.DGOFI

Lot Number: LK10010

Date Completed: 11/18/2010

Nisreen Saikaly
Project Manager

This report shall not be reproduced, except in its entirety, without the written approval of Shealy Environmental Services, Inc.

The following non-paginated documents are considered part of this report: Chain of Custody Record and Sample Receipt Checklist.

* L K 1 0 0 1 0 *

Case Narrative
ARCADIS U.S., Inc.
Lot Number: LK10010

This Report of Analysis contains the analytical result(s) for the sample(s) listed on the Sample Summary following this Case Narrative. The sample receiving date is documented in the header information associated with each sample.

Sample receipt, sample analysis, and data review have been performed in accordance with the most current approved NELAC standards, the Shealy Environmental Services, Inc. ("Shealy") Quality Assurance Management Plan (QAMP), standard operating procedures (SOPs), and Shealy policies. Any exceptions to the NELAC standards, the QAMP, SOPs or policies are qualified on the results page or discussed below.

If you have any questions regarding this report please contact the Shealy Project Manager listed on the cover page.

Sample Summary

ARCADIS U.S., Inc.

Lot Number: LK10010

Sample Number	Sample ID	Matrix	Date Sampled	Date Received
001	E-11 (30-34)	Aqueous	11/08/2010 1350	11/10/2010
002	E-11 (36-40)	Aqueous	11/08/2010 1430	11/10/2010
003	E-11 (42-46)	Aqueous	11/08/2010 1510	11/10/2010
004	E-7 (30-34)	Aqueous	11/08/2010 1000	11/10/2010
005	E-7 (42-46)	Aqueous	11/08/2010 1130	11/10/2010
006	Trip Blank	Aqueous	11/10/2010 0900	11/10/2010

(6 samples)

Executive Summary

ARCADIS U.S., Inc.

Lot Number: LK10010

Sample	Sample ID	Matrix	Parameter	Method	Result	Q	Units	Page
001	E-11 (30-34)	Aqueous	Benzene	8260B	0.15	J	ug/L	5
001	E-11 (30-34)	Aqueous	Carbon disulfide	8260B	0.80		ug/L	5
001	E-11 (30-34)	Aqueous	1,1-Dichloroethane	8260B	0.25	J	ug/L	5
001	E-11 (30-34)	Aqueous	trans-1,2-Dichloroethene	8260B	0.43	J	ug/L	5
001	E-11 (30-34)	Aqueous	1,1-Dichloroethene	8260B	0.26	J	ug/L	5
001	E-11 (30-34)	Aqueous	cis-1,2-Dichloroethene	8260B	6.8		ug/L	5
001	E-11 (30-34)	Aqueous	Tetrachloroethene	8260B	19		ug/L	5
001	E-11 (30-34)	Aqueous	Trichloroethene	8260B	27		ug/L	6
002	E-11 (36-40)	Aqueous	Acetone	8260B	45		ug/L	7
002	E-11 (36-40)	Aqueous	Benzene	8260B	1.7		ug/L	7
002	E-11 (36-40)	Aqueous	2-Butanone (MEK)	8260B	11		ug/L	7
002	E-11 (36-40)	Aqueous	1,1-Dichloroethane	8260B	0.12	J	ug/L	7
002	E-11 (36-40)	Aqueous	trans-1,2-Dichloroethene	8260B	0.54		ug/L	7
002	E-11 (36-40)	Aqueous	cis-1,2-Dichloroethene	8260B	13		ug/L	7
002	E-11 (36-40)	Aqueous	2-Hexanone	8260B	1.0	J	ug/L	7
002	E-11 (36-40)	Aqueous	Tetrachloroethene	8260B	2.2		ug/L	7
002	E-11 (36-40)	Aqueous	Toluene	8260B	1.3		ug/L	7
002	E-11 (36-40)	Aqueous	Trichloroethene	8260B	13		ug/L	8
002	E-11 (36-40)	Aqueous	Xylenes (total)	8260B	0.76		ug/L	8
003	E-11 (42-46)	Aqueous	Acetone	8260B	20		ug/L	9
003	E-11 (42-46)	Aqueous	Benzene	8260B	0.65		ug/L	9
003	E-11 (42-46)	Aqueous	2-Butanone (MEK)	8260B	6.0	J	ug/L	9
003	E-11 (42-46)	Aqueous	cis-1,2-Dichloroethene	8260B	2.0		ug/L	9
003	E-11 (42-46)	Aqueous	2-Hexanone	8260B	0.63	J	ug/L	9
003	E-11 (42-46)	Aqueous	Tetrachloroethene	8260B	0.20	J	ug/L	9
003	E-11 (42-46)	Aqueous	Toluene	8260B	0.65		ug/L	9
003	E-11 (42-46)	Aqueous	Trichloroethene	8260B	0.50		ug/L	10
003	E-11 (42-46)	Aqueous	Xylenes (total)	8260B	0.21	J	ug/L	10
004	E-7 (30-34)	Aqueous	Acetone	8260B	9.3	J	ug/L	11
004	E-7 (30-34)	Aqueous	Carbon disulfide	8260B	0.42	J	ug/L	11
004	E-7 (30-34)	Aqueous	trans-1,2-Dichloroethene	8260B	0.30	J	ug/L	11
004	E-7 (30-34)	Aqueous	cis-1,2-Dichloroethene	8260B	19		ug/L	11
004	E-7 (30-34)	Aqueous	Tetrachloroethene	8260B	0.28	J	ug/L	11
004	E-7 (30-34)	Aqueous	Trichloroethene	8260B	24		ug/L	12
005	E-7 (42-46)	Aqueous	Acetone	8260B	47		ug/L	13
005	E-7 (42-46)	Aqueous	Benzene	8260B	0.26	J	ug/L	13
005	E-7 (42-46)	Aqueous	2-Butanone (MEK)	8260B	3.7	J	ug/L	13
005	E-7 (42-46)	Aqueous	Carbon disulfide	8260B	0.12	J	ug/L	13
005	E-7 (42-46)	Aqueous	cis-1,2-Dichloroethene	8260B	0.49	J	ug/L	13
005	E-7 (42-46)	Aqueous	Trichloroethene	8260B	0.25	J	ug/L	14
005	E-7 (42-46)	Aqueous	Xylenes (total)	8260B	0.32	J	ug/L	14
006	Trip Blank	Aqueous	Acetone	8260B	8.5	J	ug/L	15

(42 detections)

Volatile Organic Compounds by GC/MS

Client: ARCADIS U.S., Inc.
Laboratory ID: LK10010-001
Description: E-11 (30-34)
Matrix: Aqueous
Date Sampled: 11/08/2010 1350
Date Received: 11/10/2010

Run	Prep Method	Analytical Method	Dilution	Analysis Date	Analyst	Prep Date	Batch
1	5030B	8260B	1	11/18/2010 0247	DLB		46893

Parameter	CAS Number	Analytical Method	Result	Q	PQL	MDL	Units	Run
Acetone	67-64-1	8260B	ND		10	3.3	ug/L	1
Benzene	71-43-2	8260B	0.15	J	0.50	0.027	ug/L	1
Bromodichloromethane	75-27-4	8260B	ND		0.50	0.17	ug/L	1
Bromoform	75-25-2	8260B	ND		0.50	0.010	ug/L	1
Bromomethane (Methyl bromide)	74-83-9	8260B	ND		0.50	0.20	ug/L	1
2-Butanone (MEK)	78-93-3	8260B	ND		10	2.0	ug/L	1
Carbon disulfide	75-15-0	8260B	0.80		0.50	0.097	ug/L	1
Carbon tetrachloride	56-23-5	8260B	ND		0.50	0.085	ug/L	1
Chlorobenzene	108-90-7	8260B	ND		0.50	0.17	ug/L	1
Chloroethane	75-00-3	8260B	ND		0.50	0.17	ug/L	1
Chloroform	67-66-3	8260B	ND		0.50	0.17	ug/L	1
Chloromethane (Methyl chloride)	74-87-3	8260B	ND		0.50	0.17	ug/L	1
Cyclohexane	110-82-7	8260B	ND		0.50	0.30	ug/L	1
1,2-Dibromo-3-chloropropane (DBCP)	96-12-8	8260B	ND		0.50	0.069	ug/L	1
Dibromochloromethane	124-48-1	8260B	ND		0.50	0.17	ug/L	1
1,2-Dibromoethane (EDB)	106-93-4	8260B	ND		0.50	0.061	ug/L	1
1,3-Dichlorobenzene	541-73-1	8260B	ND		0.50	0.17	ug/L	1
1,2-Dichlorobenzene	95-50-1	8260B	ND		0.50	0.17	ug/L	1
1,4-Dichlorobenzene	106-46-7	8260B	ND		0.50	0.17	ug/L	1
Dichlorodifluoromethane	75-71-8	8260B	ND		0.50	0.071	ug/L	1
1,1-Dichloroethane	75-34-3	8260B	0.25	J	0.50	0.054	ug/L	1
1,2-Dichloroethane	107-06-2	8260B	ND		0.50	0.023	ug/L	1
trans-1,2-Dichloroethene	156-60-5	8260B	0.43	J	0.50	0.079	ug/L	1
1,1-Dichloroethene	75-35-4	8260B	0.26	J	0.50	0.094	ug/L	1
cis-1,2-Dichloroethene	156-59-2	8260B	6.8		0.50	0.087	ug/L	1
1,2-Dichloropropane	78-87-5	8260B	ND		0.50	0.081	ug/L	1
trans-1,3-Dichloropropene	10061-02-6	8260B	ND		0.50	0.18	ug/L	1
cis-1,3-Dichloropropene	10061-01-5	8260B	ND		0.50	0.090	ug/L	1
Ethylbenzene	100-41-4	8260B	ND		0.50	0.17	ug/L	1
2-Hexanone	591-78-6	8260B	ND		10	0.27	ug/L	1
Isopropylbenzene	98-82-8	8260B	ND		0.50	0.029	ug/L	1
Methyl acetate	79-20-9	8260B	ND		1.0	0.30	ug/L	1
Methyl tertiary butyl ether (MTBE)	1634-04-4	8260B	ND		0.50	0.019	ug/L	1
4-Methyl-2-pentanone	108-10-1	8260B	ND		10	0.31	ug/L	1
Methylcyclohexane	108-87-2	8260B	ND		5.0	0.95	ug/L	1
Methylene chloride	75-09-2	8260B	ND		0.50	0.17	ug/L	1
Styrene	100-42-5	8260B	ND		0.50	0.015	ug/L	1
1,1,2,2-Tetrachloroethane	79-34-5	8260B	ND		0.50	0.013	ug/L	1
Tetrachloroethene	127-18-4	8260B	19		0.50	0.014	ug/L	1
Toluene	108-88-3	8260B	ND		0.50	0.17	ug/L	1
1,1,2-Trichloro-1,2,2-Trifluoroethane	76-13-1	8260B	ND		0.50	0.30	ug/L	1
1,2,4-Trichlorobenzene	120-82-1	8260B	ND		0.50	0.17	ug/L	1
1,1,1-Trichloroethane	71-55-6	8260B	ND		0.50	0.029	ug/L	1
1,1,2-Trichloroethane	79-00-5	8260B	ND		0.50	0.031	ug/L	1

PQL = Practical quantitation limit
B = Detected in the method blank
E = Quantitation of compound exceeded the calibration range
ND = Not detected at or above the MDL
J = Estimated result < PQL and ≥ MDL
P = The RPD between two GC columns exceeds 40%
Where applicable, all soil sample analysis are reported on a dry weight basis unless flagged with a "W"
N = Recovery is out of criteria
H = Out of holding time

Volatile Organic Compounds by GC/MS

Client: ARCADIS U.S., Inc.
Laboratory ID: LK10010-001
Description: E-11 (30-34)
Matrix: Aqueous
Date Sampled: 11/08/2010 1350
Date Received: 11/10/2010

Run	Prep Method	Analytical Method	Dilution	Analysis Date	Analyst	Prep Date	Batch
1	5030B	8260B	1	11/18/2010 0247	DLB		46893

Parameter	CAS Number	Analytical Method	Result	Q	PQL	MDL	Units	Run
Trichloroethene	79-01-6	8260B	27		0.50	0.024	ug/L	1
Trichlorofluoromethane	75-69-4	8260B	ND		0.50	0.051	ug/L	1
Vinyl chloride	75-01-4	8260B	ND		0.50	0.065	ug/L	1
Xylenes (total)	1330-20-7	8260B	ND		0.50	0.17	ug/L	1

Surrogate	Q	Run 1 % Recovery	Acceptance Limits
1,2-Dichloroethane-d4		107	70-130
Bromofluorobenzene		114	70-130
Toluene-d8		114	70-130

PQL = Practical quantitation limit
B = Detected in the method blank
E = Quantitation of compound exceeded the calibration range
ND = Not detected at or above the MDL
J = Estimated result < PQL and ≥ MDL
P = The RPD between two GC columns exceeds 40%
Where applicable, all soil sample analysis are reported on a dry weight basis unless flagged with a "W"
N = Recovery is out of criteria
H = Out of holding time

Volatile Organic Compounds by GC/MS

Client: ARCADIS U.S., Inc.
Laboratory ID: LK10010-002
Description: E-11 (36-40)
Matrix: Aqueous
Date Sampled: 11/08/2010 1430
Date Received: 11/10/2010

Run	Prep Method	Analytical Method	Dilution	Analysis Date	Analyst	Prep Date	Batch
1	5030B	8260B	1	11/18/2010 0310	DLB		46893

Parameter	CAS Number	Analytical Method	Result	Q	PQL	MDL	Units	Run
Acetone	67-64-1	8260B	45		10	3.3	ug/L	1
Benzene	71-43-2	8260B	1.7		0.50	0.027	ug/L	1
Bromodichloromethane	75-27-4	8260B	ND		0.50	0.17	ug/L	1
Bromoform	75-25-2	8260B	ND		0.50	0.010	ug/L	1
Bromomethane (Methyl bromide)	74-83-9	8260B	ND		0.50	0.20	ug/L	1
2-Butanone (MEK)	78-93-3	8260B	11		10	2.0	ug/L	1
Carbon disulfide	75-15-0	8260B	ND		0.50	0.097	ug/L	1
Carbon tetrachloride	56-23-5	8260B	ND		0.50	0.085	ug/L	1
Chlorobenzene	108-90-7	8260B	ND		0.50	0.17	ug/L	1
Chloroethane	75-00-3	8260B	ND		0.50	0.17	ug/L	1
Chloroform	67-66-3	8260B	ND		0.50	0.17	ug/L	1
Chloromethane (Methyl chloride)	74-87-3	8260B	ND		0.50	0.17	ug/L	1
Cyclohexane	110-82-7	8260B	ND		0.50	0.30	ug/L	1
1,2-Dibromo-3-chloropropane (DBCP)	96-12-8	8260B	ND		0.50	0.069	ug/L	1
Dibromochloromethane	124-48-1	8260B	ND		0.50	0.17	ug/L	1
1,2-Dibromoethane (EDB)	106-93-4	8260B	ND		0.50	0.061	ug/L	1
1,3-Dichlorobenzene	541-73-1	8260B	ND		0.50	0.17	ug/L	1
1,2-Dichlorobenzene	95-50-1	8260B	ND		0.50	0.17	ug/L	1
1,4-Dichlorobenzene	106-46-7	8260B	ND		0.50	0.17	ug/L	1
Dichlorodifluoromethane	75-71-8	8260B	ND		0.50	0.071	ug/L	1
1,1-Dichloroethane	75-34-3	8260B	0.12	J	0.50	0.054	ug/L	1
1,2-Dichloroethane	107-06-2	8260B	ND		0.50	0.023	ug/L	1
trans-1,2-Dichloroethene	156-60-5	8260B	0.54		0.50	0.079	ug/L	1
1,1-Dichloroethene	75-35-4	8260B	ND		0.50	0.094	ug/L	1
cis-1,2-Dichloroethene	156-59-2	8260B	13		0.50	0.087	ug/L	1
1,2-Dichloropropane	78-87-5	8260B	ND		0.50	0.081	ug/L	1
trans-1,3-Dichloropropene	10061-02-6	8260B	ND		0.50	0.18	ug/L	1
cis-1,3-Dichloropropene	10061-01-5	8260B	ND		0.50	0.090	ug/L	1
Ethylbenzene	100-41-4	8260B	ND		0.50	0.17	ug/L	1
2-Hexanone	591-78-6	8260B	1.0	J	10	0.27	ug/L	1
Isopropylbenzene	98-82-8	8260B	ND		0.50	0.029	ug/L	1
Methyl acetate	79-20-9	8260B	ND		1.0	0.30	ug/L	1
Methyl tertiary butyl ether (MTBE)	1634-04-4	8260B	ND		0.50	0.019	ug/L	1
4-Methyl-2-pentanone	108-10-1	8260B	ND		10	0.31	ug/L	1
Methylcyclohexane	108-87-2	8260B	ND		5.0	0.95	ug/L	1
Methylene chloride	75-09-2	8260B	ND		0.50	0.17	ug/L	1
Styrene	100-42-5	8260B	ND		0.50	0.015	ug/L	1
1,1,2,2-Tetrachloroethane	79-34-5	8260B	ND		0.50	0.013	ug/L	1
Tetrachloroethene	127-18-4	8260B	2.2		0.50	0.014	ug/L	1
Toluene	108-88-3	8260B	1.3		0.50	0.17	ug/L	1
1,1,2-Trichloro-1,2,2-Trifluoroethane	76-13-1	8260B	ND		0.50	0.30	ug/L	1
1,2,4-Trichlorobenzene	120-82-1	8260B	ND		0.50	0.17	ug/L	1
1,1,1-Trichloroethane	71-55-6	8260B	ND		0.50	0.029	ug/L	1
1,1,2-Trichloroethane	79-00-5	8260B	ND		0.50	0.031	ug/L	1

PQL = Practical quantitation limit
B = Detected in the method blank
E = Quantitation of compound exceeded the calibration range
ND = Not detected at or above the MDL
J = Estimated result < PQL and ≥ MDL
P = The RPD between two GC columns exceeds 40%
Where applicable, all soil sample analysis are reported on a dry weight basis unless flagged with a "W"
N = Recovery is out of criteria
H = Out of holding time

Volatile Organic Compounds by GC/MS

Client: ARCADIS U.S., Inc.
Laboratory ID: LK10010-002
Description: E-11 (36-40)
Matrix: Aqueous
Date Sampled: 11/08/2010 1430
Date Received: 11/10/2010

Run	Prep Method	Analytical Method	Dilution	Analysis Date	Analyst	Prep Date	Batch
1	5030B	8260B	1	11/18/2010 0310	DLB		46893

Parameter	CAS Number	Analytical Method	Result	Q	PQL	MDL	Units	Run
Trichloroethene	79-01-6	8260B	13		0.50	0.024	ug/L	1
Trichlorofluoromethane	75-69-4	8260B	ND		0.50	0.051	ug/L	1
Vinyl chloride	75-01-4	8260B	ND		0.50	0.065	ug/L	1
Xylenes (total)	1330-20-7	8260B	0.76		0.50	0.17	ug/L	1

Surrogate	Q	Run 1 % Recovery	Acceptance Limits
1,2-Dichloroethane-d4		105	70-130
Bromofluorobenzene		113	70-130
Toluene-d8		113	70-130

PQL = Practical quantitation limit
B = Detected in the method blank
E = Quantitation of compound exceeded the calibration range
ND = Not detected at or above the MDL
J = Estimated result < PQL and ≥ MDL
P = The RPD between two GC columns exceeds 40%
Where applicable, all soil sample analysis are reported on a dry weight basis unless flagged with a "W"
N = Recovery is out of criteria
H = Out of holding time

Volatile Organic Compounds by GC/MS

Client: ARCADIS U.S., Inc.
Laboratory ID: LK10010-003
Description: E-11 (42-46)
Matrix: Aqueous
Date Sampled: 11/08/2010 1510
Date Received: 11/10/2010

Run	Prep Method	Analytical Method	Dilution	Analysis Date	Analyst	Prep Date	Batch
1	5030B	8260B	1	11/18/2010 0331	DLB		46893

Parameter	CAS Number	Analytical Method	Result	Q	PQL	MDL	Units	Run
Acetone	67-64-1	8260B	20		10	3.3	ug/L	1
Benzene	71-43-2	8260B	0.65		0.50	0.027	ug/L	1
Bromodichloromethane	75-27-4	8260B	ND		0.50	0.17	ug/L	1
Bromoform	75-25-2	8260B	ND		0.50	0.010	ug/L	1
Bromomethane (Methyl bromide)	74-83-9	8260B	ND		0.50	0.20	ug/L	1
2-Butanone (MEK)	78-93-3	8260B	6.0	J	10	2.0	ug/L	1
Carbon disulfide	75-15-0	8260B	ND		0.50	0.097	ug/L	1
Carbon tetrachloride	56-23-5	8260B	ND		0.50	0.085	ug/L	1
Chlorobenzene	108-90-7	8260B	ND		0.50	0.17	ug/L	1
Chloroethane	75-00-3	8260B	ND		0.50	0.17	ug/L	1
Chloroform	67-66-3	8260B	ND		0.50	0.17	ug/L	1
Chloromethane (Methyl chloride)	74-87-3	8260B	ND		0.50	0.17	ug/L	1
Cyclohexane	110-82-7	8260B	ND		0.50	0.30	ug/L	1
1,2-Dibromo-3-chloropropane (DBCP)	96-12-8	8260B	ND		0.50	0.069	ug/L	1
Dibromochloromethane	124-48-1	8260B	ND		0.50	0.17	ug/L	1
1,2-Dibromoethane (EDB)	106-93-4	8260B	ND		0.50	0.061	ug/L	1
1,3-Dichlorobenzene	541-73-1	8260B	ND		0.50	0.17	ug/L	1
1,2-Dichlorobenzene	95-50-1	8260B	ND		0.50	0.17	ug/L	1
1,4-Dichlorobenzene	106-46-7	8260B	ND		0.50	0.17	ug/L	1
Dichlorodifluoromethane	75-71-8	8260B	ND		0.50	0.071	ug/L	1
1,1-Dichloroethane	75-34-3	8260B	ND		0.50	0.054	ug/L	1
1,2-Dichloroethane	107-06-2	8260B	ND		0.50	0.023	ug/L	1
trans-1,2-Dichloroethene	156-60-5	8260B	ND		0.50	0.079	ug/L	1
1,1-Dichloroethene	75-35-4	8260B	ND		0.50	0.094	ug/L	1
cis-1,2-Dichloroethene	156-59-2	8260B	2.0		0.50	0.087	ug/L	1
1,2-Dichloropropane	78-87-5	8260B	ND		0.50	0.081	ug/L	1
trans-1,3-Dichloropropene	10061-02-6	8260B	ND		0.50	0.18	ug/L	1
cis-1,3-Dichloropropene	10061-01-5	8260B	ND		0.50	0.090	ug/L	1
Ethylbenzene	100-41-4	8260B	ND		0.50	0.17	ug/L	1
2-Hexanone	591-78-6	8260B	0.63	J	10	0.27	ug/L	1
Isopropylbenzene	98-82-8	8260B	ND		0.50	0.029	ug/L	1
Methyl acetate	79-20-9	8260B	ND		1.0	0.30	ug/L	1
Methyl tertiary butyl ether (MTBE)	1634-04-4	8260B	ND		0.50	0.019	ug/L	1
4-Methyl-2-pentanone	108-10-1	8260B	ND		10	0.31	ug/L	1
Methylcyclohexane	108-87-2	8260B	ND		5.0	0.95	ug/L	1
Methylene chloride	75-09-2	8260B	ND		0.50	0.17	ug/L	1
Styrene	100-42-5	8260B	ND		0.50	0.015	ug/L	1
1,1,2,2-Tetrachloroethane	79-34-5	8260B	ND		0.50	0.013	ug/L	1
Tetrachloroethene	127-18-4	8260B	0.20	J	0.50	0.014	ug/L	1
Toluene	108-88-3	8260B	0.65		0.50	0.17	ug/L	1
1,1,2-Trichloro-1,2,2-Trifluoroethane	76-13-1	8260B	ND		0.50	0.30	ug/L	1
1,2,4-Trichlorobenzene	120-82-1	8260B	ND		0.50	0.17	ug/L	1
1,1,1-Trichloroethane	71-55-6	8260B	ND		0.50	0.029	ug/L	1
1,1,2-Trichloroethane	79-00-5	8260B	ND		0.50	0.031	ug/L	1

PQL = Practical quantitation limit
B = Detected in the method blank
E = Quantitation of compound exceeded the calibration range
ND = Not detected at or above the MDL
J = Estimated result < PQL and ≥ MDL
P = The RPD between two GC columns exceeds 40%
Where applicable, all soil sample analysis are reported on a dry weight basis unless flagged with a "W"
N = Recovery is out of criteria
H = Out of holding time

Volatile Organic Compounds by GC/MS

Client: ARCADIS U.S., Inc.
Laboratory ID: LK10010-003
Description: E-11 (42-46)
Matrix: Aqueous
Date Sampled: 11/08/2010 1510
Date Received: 11/10/2010

Run	Prep Method	Analytical Method	Dilution	Analysis Date	Analyst	Prep Date	Batch
1	5030B	8260B	1	11/18/2010 0331	DLB		46893

Parameter	CAS Number	Analytical Method	Result	Q	PQL	MDL	Units	Run
Trichloroethene	79-01-6	8260B	0.50		0.50	0.024	ug/L	1
Trichlorofluoromethane	75-69-4	8260B	ND		0.50	0.051	ug/L	1
Vinyl chloride	75-01-4	8260B	ND		0.50	0.065	ug/L	1
Xylenes (total)	1330-20-7	8260B	0.21	J	0.50	0.17	ug/L	1

Surrogate	Q	Run 1 % Recovery	Acceptance Limits
1,2-Dichloroethane-d4		103	70-130
Bromofluorobenzene		112	70-130
Toluene-d8		113	70-130

PQL = Practical quantitation limit
B = Detected in the method blank
E = Quantitation of compound exceeded the calibration range
ND = Not detected at or above the MDL
J = Estimated result < PQL and ≥ MDL
P = The RPD between two GC columns exceeds 40%
Where applicable, all soil sample analysis are reported on a dry weight basis unless flagged with a "W"
N = Recovery is out of criteria
H = Out of holding time

Volatile Organic Compounds by GC/MS

Client: ARCADIS U.S., Inc.
Laboratory ID: LK10010-004
Description: E-7 (30-34)
Matrix: Aqueous
Date Sampled: 11/08/2010 1000
Date Received: 11/10/2010

Run	Prep Method	Analytical Method	Dilution	Analysis Date	Analyst	Prep Date	Batch
1	5030B	8260B	1	11/18/2010 0353	DLB		46893

Parameter	CAS Number	Analytical Method	Result	Q	PQL	MDL	Units	Run
Acetone	67-64-1	8260B	9.3	J	10	3.3	ug/L	1
Benzene	71-43-2	8260B	ND		0.50	0.027	ug/L	1
Bromodichloromethane	75-27-4	8260B	ND		0.50	0.17	ug/L	1
Bromoform	75-25-2	8260B	ND		0.50	0.010	ug/L	1
Bromomethane (Methyl bromide)	74-83-9	8260B	ND		0.50	0.20	ug/L	1
2-Butanone (MEK)	78-93-3	8260B	ND		10	2.0	ug/L	1
Carbon disulfide	75-15-0	8260B	0.42	J	0.50	0.097	ug/L	1
Carbon tetrachloride	56-23-5	8260B	ND		0.50	0.085	ug/L	1
Chlorobenzene	108-90-7	8260B	ND		0.50	0.17	ug/L	1
Chloroethane	75-00-3	8260B	ND		0.50	0.17	ug/L	1
Chloroform	67-66-3	8260B	ND		0.50	0.17	ug/L	1
Chloromethane (Methyl chloride)	74-87-3	8260B	ND		0.50	0.17	ug/L	1
Cyclohexane	110-82-7	8260B	ND		0.50	0.30	ug/L	1
1,2-Dibromo-3-chloropropane (DBCP)	96-12-8	8260B	ND		0.50	0.069	ug/L	1
Dibromochloromethane	124-48-1	8260B	ND		0.50	0.17	ug/L	1
1,2-Dibromoethane (EDB)	106-93-4	8260B	ND		0.50	0.061	ug/L	1
1,3-Dichlorobenzene	541-73-1	8260B	ND		0.50	0.17	ug/L	1
1,2-Dichlorobenzene	95-50-1	8260B	ND		0.50	0.17	ug/L	1
1,4-Dichlorobenzene	106-46-7	8260B	ND		0.50	0.17	ug/L	1
Dichlorodifluoromethane	75-71-8	8260B	ND		0.50	0.071	ug/L	1
1,1-Dichloroethane	75-34-3	8260B	ND		0.50	0.054	ug/L	1
1,2-Dichloroethane	107-06-2	8260B	ND		0.50	0.023	ug/L	1
trans-1,2-Dichloroethene	156-60-5	8260B	0.30	J	0.50	0.079	ug/L	1
1,1-Dichloroethene	75-35-4	8260B	ND		0.50	0.094	ug/L	1
cis-1,2-Dichloroethene	156-59-2	8260B	19		0.50	0.087	ug/L	1
1,2-Dichloropropane	78-87-5	8260B	ND		0.50	0.081	ug/L	1
trans-1,3-Dichloropropene	10061-02-6	8260B	ND		0.50	0.18	ug/L	1
cis-1,3-Dichloropropene	10061-01-5	8260B	ND		0.50	0.090	ug/L	1
Ethylbenzene	100-41-4	8260B	ND		0.50	0.17	ug/L	1
2-Hexanone	591-78-6	8260B	ND		10	0.27	ug/L	1
Isopropylbenzene	98-82-8	8260B	ND		0.50	0.029	ug/L	1
Methyl acetate	79-20-9	8260B	ND		1.0	0.30	ug/L	1
Methyl tertiary butyl ether (MTBE)	1634-04-4	8260B	ND		0.50	0.019	ug/L	1
4-Methyl-2-pentanone	108-10-1	8260B	ND		10	0.31	ug/L	1
Methylcyclohexane	108-87-2	8260B	ND		5.0	0.95	ug/L	1
Methylene chloride	75-09-2	8260B	ND		0.50	0.17	ug/L	1
Styrene	100-42-5	8260B	ND		0.50	0.015	ug/L	1
1,1,2,2-Tetrachloroethane	79-34-5	8260B	ND		0.50	0.013	ug/L	1
Tetrachloroethene	127-18-4	8260B	0.28	J	0.50	0.014	ug/L	1
Toluene	108-88-3	8260B	ND		0.50	0.17	ug/L	1
1,1,2-Trichloro-1,2,2-Trifluoroethane	76-13-1	8260B	ND		0.50	0.30	ug/L	1
1,2,4-Trichlorobenzene	120-82-1	8260B	ND		0.50	0.17	ug/L	1
1,1,1-Trichloroethane	71-55-6	8260B	ND		0.50	0.029	ug/L	1
1,1,2-Trichloroethane	79-00-5	8260B	ND		0.50	0.031	ug/L	1

PQL = Practical quantitation limit
B = Detected in the method blank
E = Quantitation of compound exceeded the calibration range
ND = Not detected at or above the MDL
J = Estimated result < PQL and ≥ MDL
P = The RPD between two GC columns exceeds 40%
Where applicable, all soil sample analysis are reported on a dry weight basis unless flagged with a "W"
N = Recovery is out of criteria
H = Out of holding time

Volatile Organic Compounds by GC/MS

Client: ARCADIS U.S., Inc.
Laboratory ID: LK10010-004
Description: E-7 (30-34)
Matrix: Aqueous
Date Sampled: 11/08/2010 1000
Date Received: 11/10/2010

Run	Prep Method	Analytical Method	Dilution	Analysis Date	Analyst	Prep Date	Batch
1	5030B	8260B	1	11/18/2010 0353	DLB		46893

Parameter	CAS Number	Analytical Method	Result	Q	PQL	MDL	Units	Run
Trichloroethene	79-01-6	8260B	24		0.50	0.024	ug/L	1
Trichlorofluoromethane	75-69-4	8260B	ND		0.50	0.051	ug/L	1
Vinyl chloride	75-01-4	8260B	ND		0.50	0.065	ug/L	1
Xylenes (total)	1330-20-7	8260B	ND		0.50	0.17	ug/L	1

Surrogate	Q	Run 1 % Recovery	Acceptance Limits
1,2-Dichloroethane-d4		102	70-130
Bromofluorobenzene		110	70-130
Toluene-d8		113	70-130

PQL = Practical quantitation limit
B = Detected in the method blank
E = Quantitation of compound exceeded the calibration range
ND = Not detected at or above the MDL
J = Estimated result < PQL and ≥ MDL
P = The RPD between two GC columns exceeds 40%
Where applicable, all soil sample analysis are reported on a dry weight basis unless flagged with a "W"
N = Recovery is out of criteria
H = Out of holding time

Volatile Organic Compounds by GC/MS

Client: ARCADIS U.S., Inc.
Laboratory ID: LK10010-005
Description: E-7 (42-46)
Matrix: Aqueous
Date Sampled: 11/08/2010 1130
Date Received: 11/10/2010

Run	Prep Method	Analytical Method	Dilution	Analysis Date	Analyst	Prep Date	Batch
1	5030B	8260B	1	11/18/2010 0415	DLB		46893

Parameter	CAS Number	Analytical Method	Result	Q	PQL	MDL	Units	Run
Acetone	67-64-1	8260B	47		10	3.3	ug/L	1
Benzene	71-43-2	8260B	0.26	J	0.50	0.027	ug/L	1
Bromodichloromethane	75-27-4	8260B	ND		0.50	0.17	ug/L	1
Bromoform	75-25-2	8260B	ND		0.50	0.010	ug/L	1
Bromomethane (Methyl bromide)	74-83-9	8260B	ND		0.50	0.20	ug/L	1
2-Butanone (MEK)	78-93-3	8260B	3.7	J	10	2.0	ug/L	1
Carbon disulfide	75-15-0	8260B	0.12	J	0.50	0.097	ug/L	1
Carbon tetrachloride	56-23-5	8260B	ND		0.50	0.085	ug/L	1
Chlorobenzene	108-90-7	8260B	ND		0.50	0.17	ug/L	1
Chloroethane	75-00-3	8260B	ND		0.50	0.17	ug/L	1
Chloroform	67-66-3	8260B	ND		0.50	0.17	ug/L	1
Chloromethane (Methyl chloride)	74-87-3	8260B	ND		0.50	0.17	ug/L	1
Cyclohexane	110-82-7	8260B	ND		0.50	0.30	ug/L	1
1,2-Dibromo-3-chloropropane (DBCP)	96-12-8	8260B	ND		0.50	0.069	ug/L	1
Dibromochloromethane	124-48-1	8260B	ND		0.50	0.17	ug/L	1
1,2-Dibromoethane (EDB)	106-93-4	8260B	ND		0.50	0.061	ug/L	1
1,3-Dichlorobenzene	541-73-1	8260B	ND		0.50	0.17	ug/L	1
1,2-Dichlorobenzene	95-50-1	8260B	ND		0.50	0.17	ug/L	1
1,4-Dichlorobenzene	106-46-7	8260B	ND		0.50	0.17	ug/L	1
Dichlorodifluoromethane	75-71-8	8260B	ND		0.50	0.071	ug/L	1
1,1-Dichloroethane	75-34-3	8260B	ND		0.50	0.054	ug/L	1
1,2-Dichloroethane	107-06-2	8260B	ND		0.50	0.023	ug/L	1
trans-1,2-Dichloroethene	156-60-5	8260B	ND		0.50	0.079	ug/L	1
1,1-Dichloroethene	75-35-4	8260B	ND		0.50	0.094	ug/L	1
cis-1,2-Dichloroethene	156-59-2	8260B	0.49	J	0.50	0.087	ug/L	1
1,2-Dichloropropane	78-87-5	8260B	ND		0.50	0.081	ug/L	1
trans-1,3-Dichloropropene	10061-02-6	8260B	ND		0.50	0.18	ug/L	1
cis-1,3-Dichloropropene	10061-01-5	8260B	ND		0.50	0.090	ug/L	1
Ethylbenzene	100-41-4	8260B	ND		0.50	0.17	ug/L	1
2-Hexanone	591-78-6	8260B	ND		10	0.27	ug/L	1
Isopropylbenzene	98-82-8	8260B	ND		0.50	0.029	ug/L	1
Methyl acetate	79-20-9	8260B	ND		1.0	0.30	ug/L	1
Methyl tertiary butyl ether (MTBE)	1634-04-4	8260B	ND		0.50	0.019	ug/L	1
4-Methyl-2-pentanone	108-10-1	8260B	ND		10	0.31	ug/L	1
Methylcyclohexane	108-87-2	8260B	ND		5.0	0.95	ug/L	1
Methylene chloride	75-09-2	8260B	ND		0.50	0.17	ug/L	1
Styrene	100-42-5	8260B	ND		0.50	0.015	ug/L	1
1,1,2,2-Tetrachloroethane	79-34-5	8260B	ND		0.50	0.013	ug/L	1
Tetrachloroethene	127-18-4	8260B	ND		0.50	0.014	ug/L	1
Toluene	108-88-3	8260B	ND		0.50	0.17	ug/L	1
1,1,2-Trichloro-1,2,2-Trifluoroethane	76-13-1	8260B	ND		0.50	0.30	ug/L	1
1,2,4-Trichlorobenzene	120-82-1	8260B	ND		0.50	0.17	ug/L	1
1,1,1-Trichloroethane	71-55-6	8260B	ND		0.50	0.029	ug/L	1
1,1,2-Trichloroethane	79-00-5	8260B	ND		0.50	0.031	ug/L	1

PQL = Practical quantitation limit
B = Detected in the method blank
E = Quantitation of compound exceeded the calibration range
ND = Not detected at or above the MDL
J = Estimated result < PQL and ≥ MDL
P = The RPD between two GC columns exceeds 40%
Where applicable, all soil sample analysis are reported on a dry weight basis unless flagged with a "W"
N = Recovery is out of criteria
H = Out of holding time

Volatile Organic Compounds by GC/MS

Client: ARCADIS U.S., Inc.
Laboratory ID: LK10010-005
Description: E-7 (42-46)
Matrix: Aqueous
Date Sampled: 11/08/2010 1130
Date Received: 11/10/2010

Run	Prep Method	Analytical Method	Dilution	Analysis Date	Analyst	Prep Date	Batch
1	5030B	8260B	1	11/18/2010 0415	DLB		46893

Parameter	CAS Number	Analytical Method	Result	Q	PQL	MDL	Units	Run
Trichloroethene	79-01-6	8260B	0.25	J	0.50	0.024	ug/L	1
Trichlorofluoromethane	75-69-4	8260B	ND		0.50	0.051	ug/L	1
Vinyl chloride	75-01-4	8260B	ND		0.50	0.065	ug/L	1
Xylenes (total)	1330-20-7	8260B	0.32	J	0.50	0.17	ug/L	1

Surrogate	Q	Run 1 % Recovery	Acceptance Limits
1,2-Dichloroethane-d4		109	70-130
Bromofluorobenzene		112	70-130
Toluene-d8		115	70-130

PQL = Practical quantitation limit
B = Detected in the method blank
E = Quantitation of compound exceeded the calibration range
ND = Not detected at or above the MDL
J = Estimated result < PQL and ≥ MDL
P = The RPD between two GC columns exceeds 40%
Where applicable, all soil sample analysis are reported on a dry weight basis unless flagged with a "W"
N = Recovery is out of criteria
H = Out of holding time

Volatile Organic Compounds by GC/MS

Client: ARCADIS U.S., Inc.
Laboratory ID: LK10010-006
Description: Trip Blank
Matrix: Aqueous
Date Sampled: 11/10/2010 0900
Date Received: 11/10/2010

Run	Prep Method	Analytical Method	Dilution	Analysis Date	Analyst	Prep Date	Batch
1	5030B	8260B	1	11/11/2010 2223	DLB		46389

Parameter	CAS Number	Analytical Method	Result	Q	PQL	MDL	Units	Run
Acetone	67-64-1	8260B	8.5	J	10	3.3	ug/L	1
Benzene	71-43-2	8260B	ND		0.50	0.027	ug/L	1
Bromodichloromethane	75-27-4	8260B	ND		0.50	0.17	ug/L	1
Bromoform	75-25-2	8260B	ND		0.50	0.010	ug/L	1
Bromomethane (Methyl bromide)	74-83-9	8260B	ND		0.50	0.20	ug/L	1
2-Butanone (MEK)	78-93-3	8260B	ND		10	2.0	ug/L	1
Carbon disulfide	75-15-0	8260B	ND		0.50	0.097	ug/L	1
Carbon tetrachloride	56-23-5	8260B	ND		0.50	0.085	ug/L	1
Chlorobenzene	108-90-7	8260B	ND		0.50	0.17	ug/L	1
Chloroethane	75-00-3	8260B	ND		0.50	0.17	ug/L	1
Chloroform	67-66-3	8260B	ND		0.50	0.17	ug/L	1
Chloromethane (Methyl chloride)	74-87-3	8260B	ND		0.50	0.17	ug/L	1
Cyclohexane	110-82-7	8260B	ND		0.50	0.30	ug/L	1
1,2-Dibromo-3-chloropropane (DBCP)	96-12-8	8260B	ND		0.50	0.069	ug/L	1
Dibromochloromethane	124-48-1	8260B	ND		0.50	0.17	ug/L	1
1,2-Dibromoethane (EDB)	106-93-4	8260B	ND		0.50	0.061	ug/L	1
1,3-Dichlorobenzene	541-73-1	8260B	ND		0.50	0.17	ug/L	1
1,2-Dichlorobenzene	95-50-1	8260B	ND		0.50	0.17	ug/L	1
1,4-Dichlorobenzene	106-46-7	8260B	ND		0.50	0.17	ug/L	1
Dichlorodifluoromethane	75-71-8	8260B	ND		0.50	0.071	ug/L	1
1,1-Dichloroethane	75-34-3	8260B	ND		0.50	0.054	ug/L	1
1,2-Dichloroethane	107-06-2	8260B	ND		0.50	0.023	ug/L	1
trans-1,2-Dichloroethene	156-60-5	8260B	ND		0.50	0.079	ug/L	1
1,1-Dichloroethene	75-35-4	8260B	ND		0.50	0.094	ug/L	1
cis-1,2-Dichloroethene	156-59-2	8260B	ND		0.50	0.087	ug/L	1
1,2-Dichloropropane	78-87-5	8260B	ND		0.50	0.081	ug/L	1
trans-1,3-Dichloropropene	10061-02-6	8260B	ND		0.50	0.18	ug/L	1
cis-1,3-Dichloropropene	10061-01-5	8260B	ND		0.50	0.090	ug/L	1
Ethylbenzene	100-41-4	8260B	ND		0.50	0.17	ug/L	1
2-Hexanone	591-78-6	8260B	ND		10	0.27	ug/L	1
Isopropylbenzene	98-82-8	8260B	ND		0.50	0.029	ug/L	1
Methyl acetate	79-20-9	8260B	ND		1.0	0.30	ug/L	1
Methyl tertiary butyl ether (MTBE)	1634-04-4	8260B	ND		0.50	0.019	ug/L	1
4-Methyl-2-pentanone	108-10-1	8260B	ND		10	0.31	ug/L	1
Methylcyclohexane	108-87-2	8260B	ND		5.0	0.95	ug/L	1
Methylene chloride	75-09-2	8260B	ND		0.50	0.17	ug/L	1
Styrene	100-42-5	8260B	ND		0.50	0.015	ug/L	1
1,1,2,2-Tetrachloroethane	79-34-5	8260B	ND		0.50	0.013	ug/L	1
Tetrachloroethene	127-18-4	8260B	ND		0.50	0.014	ug/L	1
Toluene	108-88-3	8260B	ND		0.50	0.17	ug/L	1
1,1,2-Trichloro-1,2,2-Trifluoroethane	76-13-1	8260B	ND		0.50	0.30	ug/L	1
1,2,4-Trichlorobenzene	120-82-1	8260B	ND		0.50	0.17	ug/L	1
1,1,1-Trichloroethane	71-55-6	8260B	ND		0.50	0.029	ug/L	1
1,1,2-Trichloroethane	79-00-5	8260B	ND		0.50	0.031	ug/L	1

PQL = Practical quantitation limit
B = Detected in the method blank
E = Quantitation of compound exceeded the calibration range
ND = Not detected at or above the MDL
J = Estimated result < PQL and ≥ MDL
P = The RPD between two GC columns exceeds 40%
Where applicable, all soil sample analysis are reported on a dry weight basis unless flagged with a "W"
N = Recovery is out of criteria
H = Out of holding time

Volatile Organic Compounds by GC/MS

Client: ARCADIS U.S., Inc.
Laboratory ID: LK10010-006
Description: Trip Blank
Matrix: Aqueous
Date Sampled: 11/10/2010 0900
Date Received: 11/10/2010

Run	Prep Method	Analytical Method	Dilution	Analysis Date	Analyst	Prep Date	Batch
1	5030B	8260B	1	11/11/2010 2223	DLB		46389

Parameter	CAS Number	Analytical Method	Result	Q	PQL	MDL	Units	Run
Trichloroethene	79-01-6	8260B	ND		0.50	0.024	ug/L	1
Trichlorofluoromethane	75-69-4	8260B	ND		0.50	0.051	ug/L	1
Vinyl chloride	75-01-4	8260B	ND		0.50	0.065	ug/L	1
Xylenes (total)	1330-20-7	8260B	ND		0.50	0.17	ug/L	1

Surrogate	Q	Run 1 % Recovery	Acceptance Limits
1,2-Dichloroethane-d4		105	70-130
Bromofluorobenzene		110	70-130
Toluene-d8		110	70-130

PQL = Practical quantitation limit
B = Detected in the method blank
E = Quantitation of compound exceeded the calibration range
ND = Not detected at or above the MDL
J = Estimated result < PQL and ≥ MDL
P = The RPD between two GC columns exceeds 40%
Where applicable, all soil sample analysis are reported on a dry weight basis unless flagged with a "W"
N = Recovery is out of criteria
H = Out of holding time

QC Summary

Volatile Organic Compounds by GC/MS - MB

Sample ID: LQ46389-001
Batch: 46389
Analytical Method: 8260B

Matrix: Aqueous
Prep Method: 5030B

Parameter	Result	Q	Dil	PQL	MDL	Units	Analysis Date
Acetone	ND		1	10	3.3	ug/L	11/11/2010 1610
Benzene	ND		1	0.50	0.027	ug/L	11/11/2010 1610
Bromodichloromethane	ND		1	0.50	0.17	ug/L	11/11/2010 1610
Bromoform	ND		1	0.50	0.010	ug/L	11/11/2010 1610
Bromomethane (Methyl bromide)	ND		1	0.50	0.20	ug/L	11/11/2010 1610
2-Butanone (MEK)	ND		1	10	2.0	ug/L	11/11/2010 1610
Carbon disulfide	ND		1	0.50	0.097	ug/L	11/11/2010 1610
Carbon tetrachloride	ND		1	0.50	0.085	ug/L	11/11/2010 1610
Chlorobenzene	ND		1	0.50	0.17	ug/L	11/11/2010 1610
Chloroethane	ND		1	0.50	0.17	ug/L	11/11/2010 1610
Chloroform	ND		1	0.50	0.17	ug/L	11/11/2010 1610
Chloromethane (Methyl chloride)	ND		1	0.50	0.17	ug/L	11/11/2010 1610
Cyclohexane	ND		1	0.50	0.30	ug/L	11/11/2010 1610
1,2-Dibromo-3-chloropropane (DBCP)	ND		1	0.50	0.069	ug/L	11/11/2010 1610
Dibromochloromethane	ND		1	0.50	0.17	ug/L	11/11/2010 1610
1,2-Dibromoethane (EDB)	ND		1	0.50	0.061	ug/L	11/11/2010 1610
1,4-Dichlorobenzene	ND		1	0.50	0.17	ug/L	11/11/2010 1610
1,2-Dichlorobenzene	ND		1	0.50	0.17	ug/L	11/11/2010 1610
1,3-Dichlorobenzene	ND		1	0.50	0.17	ug/L	11/11/2010 1610
Dichlorodifluoromethane	ND		1	0.50	0.071	ug/L	11/11/2010 1610
1,1-Dichloroethane	ND		1	0.50	0.054	ug/L	11/11/2010 1610
1,2-Dichloroethane	ND		1	0.50	0.023	ug/L	11/11/2010 1610
trans-1,2-Dichloroethene	ND		1	0.50	0.079	ug/L	11/11/2010 1610
1,1-Dichloroethene	ND		1	0.50	0.094	ug/L	11/11/2010 1610
cis-1,2-Dichloroethene	ND		1	0.50	0.087	ug/L	11/11/2010 1610
1,2-Dichloropropane	ND		1	0.50	0.081	ug/L	11/11/2010 1610
trans-1,3-Dichloropropene	ND		1	0.50	0.18	ug/L	11/11/2010 1610
cis-1,3-Dichloropropene	ND		1	0.50	0.090	ug/L	11/11/2010 1610
Ethylbenzene	ND		1	0.50	0.17	ug/L	11/11/2010 1610
2-Hexanone	ND		1	10	0.27	ug/L	11/11/2010 1610
Isopropylbenzene	ND		1	0.50	0.029	ug/L	11/11/2010 1610
Methyl acetate	ND		1	1.0	0.30	ug/L	11/11/2010 1610
Methyl tertiary butyl ether (MTBE)	ND		1	0.50	0.019	ug/L	11/11/2010 1610
4-Methyl-2-pentanone	ND		1	10	0.31	ug/L	11/11/2010 1610
Methylcyclohexane	ND		1	5.0	0.95	ug/L	11/11/2010 1610
Methylene chloride	ND		1	0.50	0.17	ug/L	11/11/2010 1610
Styrene	ND		1	0.50	0.015	ug/L	11/11/2010 1610
1,1,2,2-Tetrachloroethane	ND		1	0.50	0.013	ug/L	11/11/2010 1610
Tetrachloroethene	ND		1	0.50	0.014	ug/L	11/11/2010 1610
Toluene	ND		1	0.50	0.17	ug/L	11/11/2010 1610
1,1,2-Trichloro-1,2,2-Trifluoroethane	ND		1	0.50	0.30	ug/L	11/11/2010 1610
1,2,4-Trichlorobenzene	ND		1	0.50	0.17	ug/L	11/11/2010 1610
1,1,2-Trichloroethane	ND		1	0.50	0.031	ug/L	11/11/2010 1610
1,1,1-Trichloroethane	ND		1	0.50	0.029	ug/L	11/11/2010 1610

PQL = Practical quantitation limit
ND = Not detected at or above the MDL
P = The RPD between two GC columns exceeds 40%
J = Estimated result < PQL and ≥ MDL
N - Recovery is out of criteria
+ - RPD is out of criteria

Where applicable, all soil sample analysis are reported on a dry weight basis unless flagged with a "W"

Note: Calculations are performed before rounding to avoid round-off errors in calculated results

Volatile Organic Compounds by GC/MS - MB

Sample ID: LQ46389-001
Batch: 46389
Analytical Method: 8260B

Matrix: Aqueous
Prep Method: 5030B

Parameter	Result	Q	Dil	PQL	MDL	Units	Analysis Date
Trichloroethene	ND		1	0.50	0.024	ug/L	11/11/2010 1610
Trichlorofluoromethane	ND		1	0.50	0.051	ug/L	11/11/2010 1610
Vinyl chloride	ND		1	0.50	0.065	ug/L	11/11/2010 1610
Xylenes (total)	ND		1	0.50	0.17	ug/L	11/11/2010 1610

Surrogate	Q	% Rec	Acceptance Limit
Bromofluorobenzene		96	70-130
1,2-Dichloroethane-d4		96	70-130
Toluene-d8		107	70-130

PQL = Practical quantitation limit
ND = Not detected at or above the MDL
P = The RPD between two GC columns exceeds 40%
J = Estimated result < PQL and ≥ MDL
N - Recovery is out of criteria
+ - RPD is out of criteria

Where applicable, all soil sample analysis are reported on a dry weight basis unless flagged with a "W"

Note: Calculations are performed before rounding to avoid round-off errors in calculated results

Volatile Organic Compounds by GC/MS - LCS

Sample ID: LQ46389-002
Batch: 46389
Analytical Method: 8260B

Matrix: Aqueous
Prep Method: 5030B

Parameter	Spike Amount (ug/L)	Result (ug/L)	Q	Dil	% Rec	% Rec Limit	Analysis Date
Acetone	100	110		1	115	46-153	11/11/2010 1436
Benzene	50	53		1	107	70-130	11/11/2010 1436
Bromodichloromethane	50	49		1	97	70-130	11/11/2010 1436
Bromoform	50	39		1	78	70-130	11/11/2010 1436
Bromomethane (Methyl bromide)	50	43		1	86	60-140	11/11/2010 1436
2-Butanone (MEK)	100	120		1	116	60-140	11/11/2010 1436
Carbon disulfide	50	53		1	106	60-140	11/11/2010 1436
Carbon tetrachloride	50	50		1	100	70-130	11/11/2010 1436
Chlorobenzene	50	49		1	99	70-130	11/11/2010 1436
Chloroethane	50	45		1	90	42-163	11/11/2010 1436
Chloroform	50	54		1	108	70-130	11/11/2010 1436
Chloromethane (Methyl chloride)	50	48		1	97	20-158	11/11/2010 1436
Cyclohexane	50	55		1	110	70-130	11/11/2010 1436
1,2-Dibromo-3-chloropropane (DBCP)	50	47		1	93	70-130	11/11/2010 1436
Dibromochloromethane	50	46		1	92	70-130	11/11/2010 1436
1,2-Dibromoethane (EDB)	50	50		1	100	70-130	11/11/2010 1436
1,4-Dichlorobenzene	50	50		1	100	70-130	11/11/2010 1436
1,2-Dichlorobenzene	50	51		1	103	70-130	11/11/2010 1436
1,3-Dichlorobenzene	50	51		1	103	70-130	11/11/2010 1436
Dichlorodifluoromethane	50	50		1	101	60-140	11/11/2010 1436
1,1-Dichloroethane	50	56		1	112	70-130	11/11/2010 1436
1,2-Dichloroethane	50	53		1	106	70-130	11/11/2010 1436
trans-1,2-Dichloroethene	50	57		1	114	70-130	11/11/2010 1436
1,1-Dichloroethene	50	52		1	104	70-130	11/11/2010 1436
cis-1,2-Dichloroethene	50	57		1	114	70-130	11/11/2010 1436
1,2-Dichloropropane	50	54		1	108	70-130	11/11/2010 1436
trans-1,3-Dichloropropene	50	46		1	92	70-130	11/11/2010 1436
cis-1,3-Dichloropropene	50	49		1	99	70-130	11/11/2010 1436
Ethylbenzene	50	51		1	102	70-130	11/11/2010 1436
2-Hexanone	100	94		1	94	60-140	11/11/2010 1436
Isopropylbenzene	50	56		1	111	70-130	11/11/2010 1436
Methyl acetate	50	52		1	104	15-128	11/11/2010 1436
Methyl tertiary butyl ether (MTBE)	50	55		1	109	70-130	11/11/2010 1436
4-Methyl-2-pentanone	100	110		1	106	60-140	11/11/2010 1436
Methylcyclohexane	50	51		1	103	70-130	11/11/2010 1436
Methylene chloride	50	51		1	102	70-130	11/11/2010 1436
Styrene	50	48		1	97	70-130	11/11/2010 1436
1,1,2,2-Tetrachloroethane	50	58		1	117	70-130	11/11/2010 1436
Tetrachloroethene	50	46		1	92	70-130	11/11/2010 1436
Toluene	50	54		1	108	70-130	11/11/2010 1436
1,1,2-Trichloro-1,2,2-Trifluoroethane	50	59		1	118	70-130	11/11/2010 1436
1,2,4-Trichlorobenzene	50	45		1	91	70-130	11/11/2010 1436
1,1,2-Trichloroethane	50	50		1	101	70-130	11/11/2010 1436
1,1,1-Trichloroethane	50	53		1	105	70-130	11/11/2010 1436

PQL = Practical quantitation limit
ND = Not detected at or above the MDL
P = The RPD between two GC columns exceeds 40%
J = Estimated result < PQL and ≥ MDL
N - Recovery is out of criteria
+ - RPD is out of criteria

Where applicable, all soil sample analysis are reported on a dry weight basis unless flagged with a "W"

Note: Calculations are performed before rounding to avoid round-off errors in calculated results

Volatile Organic Compounds by GC/MS - LCS

Sample ID: LQ46389-002
Batch: 46389
Analytical Method: 8260B

Matrix: Aqueous
Prep Method: 5030B

Parameter	Spike Amount (ug/L)	Result (ug/L)	Q	Dil	% Rec	% Rec Limit	Analysis Date
Trichloroethene	50	47		1	94	70-130	11/11/2010 1436
Trichlorofluoromethane	50	43		1	86	60-140	11/11/2010 1436
Vinyl chloride	50	45		1	90	60-140	11/11/2010 1436
Xylenes (total)	100	100		1	101	70-130	11/11/2010 1436

Surrogate	Q	% Rec	Acceptance Limit
Bromofluorobenzene		101	70-130
1,2-Dichloroethane-d4		90	70-130
Toluene-d8		113	70-130

PQL = Practical quantitation limit
ND = Not detected at or above the MDL
P = The RPD between two GC columns exceeds 40%
J = Estimated result < PQL and ≥ MDL
N - Recovery is out of criteria
+ - RPD is out of criteria

Where applicable, all soil sample analysis are reported on a dry weight basis unless flagged with a "W"

Note: Calculations are performed before rounding to avoid round-off errors in calculated results

Volatile Organic Compounds by GC/MS - LCSD

Sample ID: LQ46389-003
Batch: 46389
Analytical Method: 8260B

Matrix: Aqueous
Prep Method: 5030B

Parameter	Spike Amount (ug/L)	Result (ug/L)	Q	Dil	% Rec	% RPD	% Rec Limit	% RPD Limit	Analysis Date
Acetone	100	110		1	106	8.2	46-153	20	11/11/2010 1459
Benzene	50	47		1	93	13	70-130	20	11/11/2010 1459
Bromodichloromethane	50	50		1	100	2.9	70-130	20	11/11/2010 1459
Bromoform	50	40		1	80	2.0	70-130	20	11/11/2010 1459
Bromomethane (Methyl bromide)	50	44		1	88	1.7	60-140	20	11/11/2010 1459
2-Butanone (MEK)	100	88	+	1	88	27	60-140	20	11/11/2010 1459
Carbon disulfide	50	41	+	1	82	25	60-140	20	11/11/2010 1459
Carbon tetrachloride	50	51		1	101	1.7	70-130	20	11/11/2010 1459
Chlorobenzene	50	50		1	100	0.93	70-130	20	11/11/2010 1459
Chloroethane	50	44		1	88	2.4	42-163	20	11/11/2010 1459
Chloroform	50	47		1	95	13	70-130	20	11/11/2010 1459
Chloromethane (Methyl chloride)	50	50		1	100	3.7	20-158	20	11/11/2010 1459
Cyclohexane	50	42	+	1	84	27	70-130	20	11/11/2010 1459
1,2-Dibromo-3-chloropropane (DBCP)	50	46		1	93	0.61	70-130	20	11/11/2010 1459
Dibromochloromethane	50	46		1	92	0.61	70-130	20	11/11/2010 1459
1,2-Dibromoethane (EDB)	50	52		1	103	2.8	70-130	20	11/11/2010 1459
1,4-Dichlorobenzene	50	50		1	100	0.48	70-130	20	11/11/2010 1459
1,2-Dichlorobenzene	50	52		1	103	0.48	70-130	20	11/11/2010 1459
1,3-Dichlorobenzene	50	52		1	105	1.8	70-130	20	11/11/2010 1459
Dichlorodifluoromethane	50	54		1	107	6.4	60-140	20	11/11/2010 1459
1,1-Dichloroethane	50	44	+	1	88	24	70-130	20	11/11/2010 1459
1,2-Dichloroethane	50	52		1	104	1.5	70-130	20	11/11/2010 1459
trans-1,2-Dichloroethene	50	44	+	1	88	25	70-130	20	11/11/2010 1459
1,1-Dichloroethene	50	44		1	88	17	70-130	20	11/11/2010 1459
cis-1,2-Dichloroethene	50	45	+	1	91	23	70-130	20	11/11/2010 1459
1,2-Dichloropropane	50	52		1	104	3.9	70-130	20	11/11/2010 1459
trans-1,3-Dichloropropene	50	46		1	93	0.76	70-130	20	11/11/2010 1459
cis-1,3-Dichloropropene	50	51		1	103	4.4	70-130	20	11/11/2010 1459
Ethylbenzene	50	52		1	104	1.6	70-130	20	11/11/2010 1459
2-Hexanone	100	100		1	104	10	60-140	20	11/11/2010 1459
Isopropylbenzene	50	55		1	109	2.0	70-130	20	11/11/2010 1459
Methyl acetate	50	41	+	1	82	23	15-128	20	11/11/2010 1459
Methyl tertiary butyl ether (MTBE)	50	44	+	1	88	21	70-130	20	11/11/2010 1459
4-Methyl-2-pentanone	100	110		1	109	3.0	60-140	20	11/11/2010 1459
Methylcyclohexane	50	53		1	105	2.8	70-130	20	11/11/2010 1459
Methylene chloride	50	39	+	1	78	26	70-130	20	11/11/2010 1459
Styrene	50	49		1	98	1.4	70-130	20	11/11/2010 1459
1,1,2,2-Tetrachloroethane	50	55		1	110	5.7	70-130	20	11/11/2010 1459
Tetrachloroethene	50	46		1	92	0.50	70-130	20	11/11/2010 1459
Toluene	50	55		1	110	2.1	70-130	20	11/11/2010 1459
1,1,2-Trichloro-1,2,2-Trifluoroethane	50	51		1	101	15	70-130	20	11/11/2010 1459
1,2,4-Trichlorobenzene	50	45		1	90	0.83	70-130	20	11/11/2010 1459
1,1,2-Trichloroethane	50	51		1	101	0.29	70-130	20	11/11/2010 1459
1,1,1-Trichloroethane	50	51		1	101	3.6	70-130	20	11/11/2010 1459

PQL = Practical quantitation limit
ND = Not detected at or above the MDL
P = The RPD between two GC columns exceeds 40%
J = Estimated result < PQL and ≥ MDL
N - Recovery is out of criteria
+ - RPD is out of criteria

Where applicable, all soil sample analysis are reported on a dry weight basis unless flagged with a "W"

Note: Calculations are performed before rounding to avoid round-off errors in calculated results

Volatile Organic Compounds by GC/MS - LCSD

Sample ID: LQ46389-003
Batch: 46389
Analytical Method: 8260B

Matrix: Aqueous
Prep Method: 5030B

Parameter	Spike Amount (ug/L)	Result (ug/L)	Q	Dil	% Rec	% RPD	% Rec Limit	% RPD Limit	Analysis Date
Trichloroethene	50	50		1	99	5.2	70-130	20	11/11/2010 1459
Trichlorofluoromethane	50	43		1	87	0.55	60-140	20	11/11/2010 1459
Vinyl chloride	50	47		1	93	3.8	60-140	20	11/11/2010 1459
Xylenes (total)	100	100		1	102	1.3	70-130	20	11/11/2010 1459

Surrogate	Q	% Rec	Acceptance Limit
Bromofluorobenzene		103	70-130
1,2-Dichloroethane-d4		85	70-130
Toluene-d8		115	70-130

PQL = Practical quantitation limit
ND = Not detected at or above the MDL
P = The RPD between two GC columns exceeds 40%
J = Estimated result < PQL and ≥ MDL
N - Recovery is out of criteria
+ - RPD is out of criteria

Where applicable, all soil sample analysis are reported on a dry weight basis unless flagged with a "W"

Note: Calculations are performed before rounding to avoid round-off errors in calculated results

Volatile Organic Compounds by GC/MS - MB

Sample ID: LQ46893-001
Batch: 46893
Analytical Method: 8260B

Matrix: Aqueous
Prep Method: 5030B

Parameter	Result	Q	Dil	PQL	MDL	Units	Analysis Date
Acetone	ND		1	10	3.3	ug/L	11/18/2010 0041
Benzene	ND		1	0.50	0.027	ug/L	11/18/2010 0041
Bromodichloromethane	ND		1	0.50	0.17	ug/L	11/18/2010 0041
Bromoform	ND		1	0.50	0.010	ug/L	11/18/2010 0041
Bromomethane (Methyl bromide)	ND		1	0.50	0.20	ug/L	11/18/2010 0041
2-Butanone (MEK)	ND		1	10	2.0	ug/L	11/18/2010 0041
Carbon disulfide	ND		1	0.50	0.097	ug/L	11/18/2010 0041
Carbon tetrachloride	ND		1	0.50	0.085	ug/L	11/18/2010 0041
Chlorobenzene	ND		1	0.50	0.17	ug/L	11/18/2010 0041
Chloroethane	ND		1	0.50	0.17	ug/L	11/18/2010 0041
Chloroform	ND		1	0.50	0.17	ug/L	11/18/2010 0041
Chloromethane (Methyl chloride)	ND		1	0.50	0.17	ug/L	11/18/2010 0041
Cyclohexane	ND		1	0.50	0.30	ug/L	11/18/2010 0041
1,2-Dibromo-3-chloropropane (DBCP)	ND		1	0.50	0.069	ug/L	11/18/2010 0041
Dibromochloromethane	ND		1	0.50	0.17	ug/L	11/18/2010 0041
1,2-Dibromoethane (EDB)	ND		1	0.50	0.061	ug/L	11/18/2010 0041
1,4-Dichlorobenzene	ND		1	0.50	0.17	ug/L	11/18/2010 0041
1,2-Dichlorobenzene	ND		1	0.50	0.17	ug/L	11/18/2010 0041
1,3-Dichlorobenzene	ND		1	0.50	0.17	ug/L	11/18/2010 0041
Dichlorodifluoromethane	ND		1	0.50	0.071	ug/L	11/18/2010 0041
1,1-Dichloroethane	ND		1	0.50	0.054	ug/L	11/18/2010 0041
1,2-Dichloroethane	ND		1	0.50	0.023	ug/L	11/18/2010 0041
trans-1,2-Dichloroethene	ND		1	0.50	0.079	ug/L	11/18/2010 0041
1,1-Dichloroethene	ND		1	0.50	0.094	ug/L	11/18/2010 0041
cis-1,2-Dichloroethene	ND		1	0.50	0.087	ug/L	11/18/2010 0041
1,2-Dichloropropane	ND		1	0.50	0.081	ug/L	11/18/2010 0041
trans-1,3-Dichloropropene	ND		1	0.50	0.18	ug/L	11/18/2010 0041
cis-1,3-Dichloropropene	ND		1	0.50	0.090	ug/L	11/18/2010 0041
Ethylbenzene	ND		1	0.50	0.17	ug/L	11/18/2010 0041
2-Hexanone	ND		1	10	0.27	ug/L	11/18/2010 0041
Isopropylbenzene	ND		1	0.50	0.029	ug/L	11/18/2010 0041
Methyl acetate	ND		1	1.0	0.30	ug/L	11/18/2010 0041
Methyl tertiary butyl ether (MTBE)	ND		1	0.50	0.019	ug/L	11/18/2010 0041
4-Methyl-2-pentanone	ND		1	10	0.31	ug/L	11/18/2010 0041
Methylcyclohexane	ND		1	5.0	0.95	ug/L	11/18/2010 0041
Methylene chloride	ND		1	0.50	0.17	ug/L	11/18/2010 0041
Styrene	ND		1	0.50	0.015	ug/L	11/18/2010 0041
1,1,2,2-Tetrachloroethane	ND		1	0.50	0.013	ug/L	11/18/2010 0041
Tetrachloroethene	ND		1	0.50	0.014	ug/L	11/18/2010 0041
Toluene	ND		1	0.50	0.17	ug/L	11/18/2010 0041
1,1,2-Trichloro-1,2,2-Trifluoroethane	ND		1	0.50	0.30	ug/L	11/18/2010 0041
1,2,4-Trichlorobenzene	ND		1	0.50	0.17	ug/L	11/18/2010 0041
1,1,2-Trichloroethane	ND		1	0.50	0.031	ug/L	11/18/2010 0041
1,1,1-Trichloroethane	ND		1	0.50	0.029	ug/L	11/18/2010 0041

PQL = Practical quantitation limit
ND = Not detected at or above the MDL
P = The RPD between two GC columns exceeds 40%
J = Estimated result < PQL and ≥ MDL
N - Recovery is out of criteria
+ - RPD is out of criteria

Where applicable, all soil sample analysis are reported on a dry weight basis unless flagged with a "W"

Note: Calculations are performed before rounding to avoid round-off errors in calculated results

Volatile Organic Compounds by GC/MS - MB

Sample ID: LQ46893-001
Batch: 46893
Analytical Method: 8260B

Matrix: Aqueous
Prep Method: 5030B

Parameter	Result	Q	Dil	PQL	MDL	Units	Analysis Date
Trichloroethene	ND		1	0.50	0.024	ug/L	11/18/2010 0041
Trichlorofluoromethane	ND		1	0.50	0.051	ug/L	11/18/2010 0041
Vinyl chloride	ND		1	0.50	0.065	ug/L	11/18/2010 0041
Xylenes (total)	ND		1	0.50	0.17	ug/L	11/18/2010 0041

Surrogate	Q	% Rec	Acceptance Limit
Bromofluorobenzene		114	70-130
1,2-Dichloroethane-d4		115	70-130
Toluene-d8		112	70-130

PQL = Practical quantitation limit
ND = Not detected at or above the MDL
P = The RPD between two GC columns exceeds 40%
J = Estimated result < PQL and ≥ MDL
N - Recovery is out of criteria
+ - RPD is out of criteria

Where applicable, all soil sample analysis are reported on a dry weight basis unless flagged with a "W"

Note: Calculations are performed before rounding to avoid round-off errors in calculated results

Volatile Organic Compounds by GC/MS - LCS

Sample ID: LQ46893-002
Batch: 46893
Analytical Method: 8260B

Matrix: Aqueous
Prep Method: 5030B

Parameter	Spike Amount (ug/L)	Result (ug/L)	Q	Dil	% Rec	% Rec Limit	Analysis Date
Acetone	100	130		1	132	46-153	11/17/2010 2314
Benzene	50	54		1	108	70-130	11/17/2010 2314
Bromodichloromethane	50	52		1	104	70-130	11/17/2010 2314
Bromoform	50	54		1	108	70-130	11/17/2010 2314
Bromomethane (Methyl bromide)	50	32		1	64	60-140	11/17/2010 2314
2-Butanone (MEK)	100	110		1	114	60-140	11/17/2010 2314
Carbon disulfide	50	57		1	114	60-140	11/17/2010 2314
Carbon tetrachloride	50	54		1	108	70-130	11/17/2010 2314
Chlorobenzene	50	55		1	110	70-130	11/17/2010 2314
Chloroethane	50	42		1	83	42-163	11/17/2010 2314
Chloroform	50	56		1	112	70-130	11/17/2010 2314
Chloromethane (Methyl chloride)	50	50		1	99	20-158	11/17/2010 2314
Cyclohexane	50	60		1	119	70-130	11/17/2010 2314
1,2-Dibromo-3-chloropropane (DBCP)	50	56		1	112	70-130	11/17/2010 2314
Dibromochloromethane	50	53		1	106	70-130	11/17/2010 2314
1,2-Dibromoethane (EDB)	50	59		1	119	70-130	11/17/2010 2314
1,4-Dichlorobenzene	50	56		1	111	70-130	11/17/2010 2314
1,2-Dichlorobenzene	50	56		1	113	70-130	11/17/2010 2314
1,3-Dichlorobenzene	50	57		1	113	70-130	11/17/2010 2314
Dichlorodifluoromethane	50	51		1	102	60-140	11/17/2010 2314
1,1-Dichloroethane	50	53		1	107	70-130	11/17/2010 2314
1,2-Dichloroethane	50	59		1	118	70-130	11/17/2010 2314
trans-1,2-Dichloroethene	50	54		1	107	70-130	11/17/2010 2314
1,1-Dichloroethene	50	56		1	113	70-130	11/17/2010 2314
cis-1,2-Dichloroethene	50	54		1	109	70-130	11/17/2010 2314
1,2-Dichloropropane	50	52		1	104	70-130	11/17/2010 2314
trans-1,3-Dichloropropene	50	56		1	111	70-130	11/17/2010 2314
cis-1,3-Dichloropropene	50	53		1	106	70-130	11/17/2010 2314
Ethylbenzene	50	53		1	105	70-130	11/17/2010 2314
2-Hexanone	100	120		1	122	60-140	11/17/2010 2314
Isopropylbenzene	50	55		1	109	70-130	11/17/2010 2314
Methyl acetate	50	60		1	121	15-128	11/17/2010 2314
Methyl tertiary butyl ether (MTBE)	50	59		1	118	70-130	11/17/2010 2314
4-Methyl-2-pentanone	100	120		1	118	60-140	11/17/2010 2314
Methylcyclohexane	50	57		1	113	70-130	11/17/2010 2314
Methylene chloride	50	52		1	105	70-130	11/17/2010 2314
Styrene	50	56		1	112	70-130	11/17/2010 2314
1,1,2,2-Tetrachloroethane	50	56		1	112	70-130	11/17/2010 2314
Tetrachloroethene	50	57		1	114	70-130	11/17/2010 2314
Toluene	50	53		1	107	70-130	11/17/2010 2314
1,1,2-Trichloro-1,2,2-Trifluoroethane	50	59		1	118	70-130	11/17/2010 2314
1,2,4-Trichlorobenzene	50	58		1	117	70-130	11/17/2010 2314
1,1,2-Trichloroethane	50	55		1	110	70-130	11/17/2010 2314
1,1,1-Trichloroethane	50	60		1	119	70-130	11/17/2010 2314

PQL = Practical quantitation limit
ND = Not detected at or above the MDL
P = The RPD between two GC columns exceeds 40%
J = Estimated result < PQL and ≥ MDL
N - Recovery is out of criteria
+ - RPD is out of criteria

Where applicable, all soil sample analysis are reported on a dry weight basis unless flagged with a "W"

Note: Calculations are performed before rounding to avoid round-off errors in calculated results

Volatile Organic Compounds by GC/MS - LCS

Sample ID: LQ46893-002
Batch: 46893
Analytical Method: 8260B

Matrix: Aqueous
Prep Method: 5030B

Parameter	Spike Amount (ug/L)	Result (ug/L)	Q	Dil	% Rec	% Rec Limit	Analysis Date
Trichloroethene	50	56		1	112	70-130	11/17/2010 2314
Trichlorofluoromethane	50	57		1	114	60-140	11/17/2010 2314
Vinyl chloride	50	41		1	82	60-140	11/17/2010 2314
Xylenes (total)	100	110		1	115	70-130	11/17/2010 2314

Surrogate	Q	% Rec	Acceptance Limit
Bromofluorobenzene		115	70-130
1,2-Dichloroethane-d4		116	70-130
Toluene-d8		116	70-130

PQL = Practical quantitation limit
ND = Not detected at or above the MDL
P = The RPD between two GC columns exceeds 40%
J = Estimated result < PQL and ≥ MDL
N - Recovery is out of criteria
+ - RPD is out of criteria

Where applicable, all soil sample analysis are reported on a dry weight basis unless flagged with a "W"

Note: Calculations are performed before rounding to avoid round-off errors in calculated results

Volatile Organic Compounds by GC/MS - LCSD

Sample ID: LQ46893-003
Batch: 46893
Analytical Method: 8260B

Matrix: Aqueous
Prep Method: 5030B

Parameter	Spike Amount (ug/L)	Result (ug/L)	Q	Dil	% Rec	% RPD	% Rec Limit	% RPD Limit	Analysis Date
Acetone	100	110		1	114	15	46-153	20	11/17/2010 2336
Benzene	50	53		1	106	2.2	70-130	20	11/17/2010 2336
Bromodichloromethane	50	51		1	103	1.5	70-130	20	11/17/2010 2336
Bromoform	50	52		1	104	3.9	70-130	20	11/17/2010 2336
Bromomethane (Methyl bromide)	50	32		1	65	0.95	60-140	20	11/17/2010 2336
2-Butanone (MEK)	100	100		1	104	9.1	60-140	20	11/17/2010 2336
Carbon disulfide	50	55		1	109	4.3	60-140	20	11/17/2010 2336
Carbon tetrachloride	50	53		1	105	2.4	70-130	20	11/17/2010 2336
Chlorobenzene	50	54		1	108	2.0	70-130	20	11/17/2010 2336
Chloroethane	50	41		1	82	2.2	42-163	20	11/17/2010 2336
Chloroform	50	56		1	111	1.1	70-130	20	11/17/2010 2336
Chloromethane (Methyl chloride)	50	47		1	94	5.2	20-158	20	11/17/2010 2336
Cyclohexane	50	58		1	116	3.1	70-130	20	11/17/2010 2336
1,2-Dibromo-3-chloropropane (DBCP)	50	51		1	103	9.2	70-130	20	11/17/2010 2336
Dibromochloromethane	50	52		1	103	2.0	70-130	20	11/17/2010 2336
1,2-Dibromoethane (EDB)	50	57		1	113	5.1	70-130	20	11/17/2010 2336
1,4-Dichlorobenzene	50	54		1	107	3.8	70-130	20	11/17/2010 2336
1,2-Dichlorobenzene	50	55		1	110	2.9	70-130	20	11/17/2010 2336
1,3-Dichlorobenzene	50	55		1	110	3.2	70-130	20	11/17/2010 2336
Dichlorodifluoromethane	50	48		1	96	6.4	60-140	20	11/17/2010 2336
1,1-Dichloroethane	50	52		1	104	2.4	70-130	20	11/17/2010 2336
1,2-Dichloroethane	50	57		1	115	3.2	70-130	20	11/17/2010 2336
trans-1,2-Dichloroethene	50	51		1	103	4.4	70-130	20	11/17/2010 2336
1,1-Dichloroethene	50	54		1	108	4.3	70-130	20	11/17/2010 2336
cis-1,2-Dichloroethene	50	53		1	106	2.9	70-130	20	11/17/2010 2336
1,2-Dichloropropane	50	51		1	103	1.6	70-130	20	11/17/2010 2336
trans-1,3-Dichloropropene	50	53		1	107	3.9	70-130	20	11/17/2010 2336
cis-1,3-Dichloropropene	50	52		1	104	1.8	70-130	20	11/17/2010 2336
Ethylbenzene	50	52		1	104	1.7	70-130	20	11/17/2010 2336
2-Hexanone	100	110		1	112	9.0	60-140	20	11/17/2010 2336
Isopropylbenzene	50	53		1	107	2.5	70-130	20	11/17/2010 2336
Methyl acetate	50	56		1	111	8.5	15-128	20	11/17/2010 2336
Methyl tertiary butyl ether (MTBE)	50	57		1	114	3.5	70-130	20	11/17/2010 2336
4-Methyl-2-pentanone	100	110		1	111	6.3	60-140	20	11/17/2010 2336
Methylcyclohexane	50	54		1	108	4.5	70-130	20	11/17/2010 2336
Methylene chloride	50	50		1	101	3.7	70-130	20	11/17/2010 2336
Styrene	50	55		1	110	1.6	70-130	20	11/17/2010 2336
1,1,2,2-Tetrachloroethane	50	53		1	107	5.2	70-130	20	11/17/2010 2336
Tetrachloroethene	50	55		1	111	2.9	70-130	20	11/17/2010 2336
Toluene	50	53		1	105	1.7	70-130	20	11/17/2010 2336
1,1,2-Trichloro-1,2,2-Trifluoroethane	50	56		1	112	5.4	70-130	20	11/17/2010 2336
1,2,4-Trichlorobenzene	50	56		1	111	4.8	70-130	20	11/17/2010 2336
1,1,2-Trichloroethane	50	54		1	107	2.2	70-130	20	11/17/2010 2336
1,1,1-Trichloroethane	50	59		1	118	1.3	70-130	20	11/17/2010 2336

PQL = Practical quantitation limit
ND = Not detected at or above the MDL
P = The RPD between two GC columns exceeds 40%
J = Estimated result < PQL and ≥ MDL
N - Recovery is out of criteria
+ - RPD is out of criteria

Where applicable, all soil sample analysis are reported on a dry weight basis unless flagged with a "W"

Note: Calculations are performed before rounding to avoid round-off errors in calculated results

Volatile Organic Compounds by GC/MS - LCSD

Sample ID: LQ46893-003
Batch: 46893
Analytical Method: 8260B

Matrix: Aqueous
Prep Method: 5030B

Parameter	Spike Amount (ug/L)	Result (ug/L)	Q	Dil	% Rec	% RPD	% Rec Limit	% RPD Limit	Analysis Date
Trichloroethene	50	55		1	110	2.2	70-130	20	11/17/2010 2336
Trichlorofluoromethane	50	55		1	110	3.2	60-140	20	11/17/2010 2336
Vinyl chloride	50	38		1	76	7.1	60-140	20	11/17/2010 2336
Xylenes (total)	100	110		1	113	1.4	70-130	20	11/17/2010 2336

Surrogate	Q	% Rec	Acceptance Limit
Bromofluorobenzene		115	70-130
1,2-Dichloroethane-d4		116	70-130
Toluene-d8		115	70-130

PQL = Practical quantitation limit
ND = Not detected at or above the MDL
P = The RPD between two GC columns exceeds 40%
J = Estimated result < PQL and ≥ MDL
N - Recovery is out of criteria
+ - RPD is out of criteria

Where applicable, all soil sample analysis are reported on a dry weight basis unless flagged with a "W"

Note: Calculations are performed before rounding to avoid round-off errors in calculated results

SHEALY **Chain of Custody Record**

SHEALY ENVIRONMENTAL SERVICES, INC.
106 Vantage Point Drive
West Columbia, South Carolina 29172
Telephone No. (803) 791-9700 Fax No. (803) 791-9111

Number 107610

Client: ARCADIS	Report to Contact: SHELLEY GIBBONS	Telephone No. / Fax No. / E-mail: shelley.gibbons@ARCADIS-US.com 919-854-1282/919-854-5448	Quote No.
Address: 801 Corporate Center Drive Suite 300	Sampler's Signature: x [signature]	Waybill No.: FED-EX	Page 1 of 1
City: RALEIGH State: NC Zip Code: 27607	Printed Name: Josh Frizzell, Charlie Lawson	Analysis (Attach list if more space is needed.)	
Project Name: FORT STEWART F39A			
Project No.: GP09HAFS.F39A.D60FI	P.O. No.		Lot No.

Sample ID / Description (Containers for each sample may be combined on one line.)	Date	Time	G-Grab C-Composite	Matrix: Aqueous	Matrix: Solid	Matrix: Non-Aqueous	No. of Containers by Preservative Type: Unpres	H2SO4	HNO3	HCl	NaOH	NaOH/ZnAc	8260B VOC	Remarks / Cooler I.D.
E-11 (30-34)	11-8-2010	1350	G	X						3			X	
E-11 (36-40)	11-8-2010	1430	G	X						3			X	
E-11 (42-46)	11-8-2010	1510	G	X						3			X	
E-7 (30-34)	11-9-2010	1000	G	X						3			X	
~~E-7 (36-40)~~ JDF 11-9-2010	~~11-9-2010~~	~~1035~~	~~G~~	~~X~~						~~3~~			~~X~~	No sample
E-7 (42-46)	11-9-2010	1130	G	X						3			X	
JDF 11-9-2010														
Trip Blank	—	—	—	X						2			X	

Possible Hazard Identification: ☐ Non-Hazard ☐ Flammable ☐ Skin Irritant ☐ Poison ☒ Unknown

Sample Disposal: ☐ Return to Client ☒ Disposal by Lab

Note: All samples are retained for six weeks from receipt unless other arrangements are made.

Turn Around Time Required (Prior lab approval required for expedited TAT.): ☐ Standard ☒ Rush (Specify) 24 Hour TAT

QC Requirements (Specify)

	Date	Time		Date	Time
1. Relinquished by [signature]	11-9-10	1300	1. Received by		
2. Relinquished by			2. Received by		
3. Relinquished by FEDEX	11-10-10	0900	3. Laboratory received by [signature]	11/10/10	0900

Comments

LAB USE ONLY
Received on ice (Circle) Yes No Ice Pack
Receipt Temp 2.7 °C

DISTRIBUTION: WHITE & YELLOW-Return to laboratory with Sample(s); PINK-Field/Client Copy

Document Number: F-AD-012 Effective Date: 08-04-02

Shealy Environmental Services, Inc.
Document Number: F-AD-016
Revision Number: 6

Page 1 of 1
Replaces Date: 09/22/06
Effective Date: 05/29/07

Sample Receipt Checklist (SRC)

Client: Arcadis Cooler Inspected by/date: EEW 11/10/10 Lot #: LK10010

Means of receipt: ☐ SESI ☐ Client ☐ UPS ☑ FedEx ☐ Airborne Exp ☐ Other

Yes ☑	No ☐	NA ☐	1. Were custody seals present on the cooler?
Yes ☑	No ☐	NA ☐	2. If custody seals were present, were they intact and unbroken?

Cooler ID/temperature upon receipt 2.7 °C / °C / °C / °C / °C / °C / °C / °C

Method: ☐ Temperature Blank ☑ Against Bottles
Method of coolant: ☑ Wet Ice ☐ Blue Ice ☐ Dry Ice ☐ None

If response is No (or Yes for 14, 15, 16), an explanation/resolution must be provided.

Yes ☐	No ☐	NA ☑	3. If temperature of any cooler exceeded 6.0°C, was Project Manager notified? PM notified by SRC, phone, note (circle one), other:_____. (For coolers received via commercial courier, PMs are to be notified immediately.
Yes ☑	No ☐	NA ☐	4. Is the commercial courier's packing slip attached to this form?
Yes ☐	No ☑	NA ☐	5. Were proper custody procedures (relinquished/received) followed?
Yes ☑	No ☐	NA ☐	6. Were sample IDs listed?
Yes ☑	No ☐	NA ☐	7. Was collection date & time listed?
Yes ☑	No ☐	NA ☐	8. Were tests to be performed listed on the COC or was quote # provided?
Yes ☑	No ☐	NA ☐	9. Did all samples arrive in the proper containers for each test?
Yes ☑	No ☐	NA ☐	10. Did all container label information (ID, date, time) agree with COC?
Yes ☑	No ☐	NA ☐	11. Did all containers arrive in good condition (unbroken, lids on, etc.)?
Yes ☑	No ☐	NA ☐	12. Was adequate sample volume available?
Yes ☑	No ☐	NA ☐	13. Were all samples received within ½ the holding time or 48 hours, whichever comes first?
Yes ☐	No ☑	NA ☐	14. Were any samples containers missing?
EEW 11/10/10 Yes ☒	No ☑	NA ☐	15. Were there any excess samples not listed on COC? ~~Trip Blank~~ EEW 11/10/10
Yes ☐	No ☑	NA ☐	16. Were bubbles present >"pea-size" (¼"or 6mm in diameter) in any VOA vials?
Yes ☐	No ☐	NA ☑	17. Were all metals/O&G/HEM/nutrient samples received at a pH of <2?
Yes ☐	No ☐	NA ☑	18. Were all cyanide and/or sulfide samples received at a pH >12?
Yes ☐	No ☐	NA ☑	19. Were all applicable NH3/TKN/cyanide/phenol/BNA/pest/PCB/herb (<0.2mg/L) and toxicity (<0.1mg/L) samples free of residual chlorine?
Yes ☐	No ☐	NA ☑	20. Were collection temperatures documented on the COC for NC samples?

Sample Preservation (Must be completed for any sample(s) incorrectly preserved or with headspace.)

Sample(s)_____ were received incorrectly preserved and were adjusted accordingly in sample receiving with _____ (H_2SO_4,HNO_3,HCl,NaOH) with the SR # (number) _____.

Sample(s)_____ were received with bubbles >6 mm in diameter.

Sample(s)_____ were received with TRC >0.2 mg/L for NH3/TKN/cyanide/BNA/pest/PCB/herb.

Toxicity sample(s)_____ analyzed by method 330.5.

This portion can be removed for Recipient's records.
11-9-2010 FedEx Tracking Number 873003045470
Sender's Name Josh Frizzell Phone 706 828-4421
Company ARCADIS
Address 1450 GREENE ST STE 220
Dept./Floor/Suite/Room
AUGUSTA State GA ZIP 30901-5201
Your Internal Billing Reference

Corrective Action taken, if necessary:
Was client notified: Yes ☐ No ☐
SESI employee:
Comments: 1 wk TA per NMS. EEW 11/10/10

Report of Analysis

ARCADIS U.S., Inc.
30 Patewood Drive
Suite 155
Greenville, SC 29615
Attention: Allison Fang

Project Name: Hunter Stewart FST-39

Project Number: GP09HAFS.F39A.DG0FI

Lot Number: LK06009

Date Completed: 11/12/2010

Nisreen Saikaly
Project Manager

This report shall not be reproduced, except in its entirety, without the written approval of Shealy Environmental Services, Inc.

The following non-paginated documents are considered part of this report: Chain of Custody Record and Sample Receipt Checklist.

* L K 0 6 0 0 9 *

Case Narrative
ARCADIS U.S., Inc.
Lot Number: LK06009

This Report of Analysis contains the analytical result(s) for the sample(s) listed on the Sample Summary following this Case Narrative. The sample receiving date is documented in the header information associated with each sample.

Sample receipt, sample analysis, and data review have been performed in accordance with the most current approved NELAC standards, the Shealy Environmental Services, Inc. ("Shealy") Quality Assurance Management Plan (QAMP), standard operating procedures (SOPs), and Shealy policies. Any exceptions to the NELAC standards, the QAMP, SOPs or policies are qualified on the results page or discussed below.

If you have any questions regarding this report please contact the Shealy Project Manager listed on the cover page.

Sample Summary

ARCADIS U.S., Inc.

Lot Number: LK06009

Sample Number	Sample ID	Matrix	Date Sampled	Date Received
001	DP-28 (30-34')	Aqueous	11/05/2010 0811	11/06/2010
002	DP-28 (42-46')	Aqueous	11/05/2010 0946	11/06/2010
003	DP-27 (30-34')	Aqueous	11/05/2010 1058	11/06/2010
004	DP-27 (36-40')	Aqueous	11/05/2010 1148	11/06/2010
005	DP-27 (42-46')	Aqueous	11/05/2010 1212	11/06/2010
006	TRIP BLANK	Aqueous	11/06/2010 0915	11/06/2010

(6 samples)

Executive Summary

ARCADIS U.S., Inc.

Lot Number: LK06009

Sample	Sample ID	Matrix	Parameter	Method	Result	Q	Units	Page
001	DP-28 (30-34')	Aqueous	Acetone	8260B	7.0	J	ug/L	5
001	DP-28 (30-34')	Aqueous	Benzene	8260B	0.26	J	ug/L	5
001	DP-28 (30-34')	Aqueous	trans-1,2-Dichloroethene	8260B	3.7		ug/L	5
001	DP-28 (30-34')	Aqueous	1,1-Dichloroethene	8260B	0.31	J	ug/L	5
001	DP-28 (30-34')	Aqueous	cis-1,2-Dichloroethene	8260B	60		ug/L	5
001	DP-28 (30-34')	Aqueous	Tetrachloroethene	8260B	5.0		ug/L	5
001	DP-28 (30-34')	Aqueous	Toluene	8260B	0.66	B	ug/L	5
001	DP-28 (30-34')	Aqueous	Trichloroethene	8260B	110		ug/L	6
002	DP-28 (42-46')	Aqueous	Acetone	8260B	30		ug/L	7
002	DP-28 (42-46')	Aqueous	Benzene	8260B	0.47	J	ug/L	7
002	DP-28 (42-46')	Aqueous	2-Butanone (MEK)	8260B	4.6	J	ug/L	7
002	DP-28 (42-46')	Aqueous	Carbon disulfide	8260B	0.39	J	ug/L	7
002	DP-28 (42-46')	Aqueous	Chloromethane (Methyl chloride)	8260B	1.2		ug/L	7
002	DP-28 (42-46')	Aqueous	Dichlorodifluoromethane	8260B	0.21	J	ug/L	7
002	DP-28 (42-46')	Aqueous	Toluene	8260B	0.55		ug/L	7
002	DP-28 (42-46')	Aqueous	Xylenes (total)	8260B	0.47	J	ug/L	8
003	DP-27 (30-34')	Aqueous	Acetone	8260B	7.3	J	ug/L	9
003	DP-27 (30-34')	Aqueous	Benzene	8260B	0.40	J	ug/L	9
003	DP-27 (30-34')	Aqueous	cis-1,2-Dichloroethene	8260B	10		ug/L	9
003	DP-27 (30-34')	Aqueous	Tetrachloroethene	8260B	0.23	J	ug/L	9
003	DP-27 (30-34')	Aqueous	Toluene	8260B	0.65	B	ug/L	9
003	DP-27 (30-34')	Aqueous	Trichloroethene	8260B	9.5		ug/L	10
004	DP-27 (36-40')	Aqueous	Acetone	8260B	6.7	J	ug/L	11
004	DP-27 (36-40')	Aqueous	Benzene	8260B	0.21	J	ug/L	11
004	DP-27 (36-40')	Aqueous	cis-1,2-Dichloroethene	8260B	0.24	J	ug/L	11
004	DP-27 (36-40')	Aqueous	Toluene	8260B	0.90	B	ug/L	11
004	DP-27 (36-40')	Aqueous	Trichloroethene	8260B	0.31	J	ug/L	12
005	DP-27 (42-46')	Aqueous	Acetone	8260B	15		ug/L	13
005	DP-27 (42-46')	Aqueous	Benzene	8260B	0.89		ug/L	13
005	DP-27 (42-46')	Aqueous	Carbon disulfide	8260B	0.40	J	ug/L	13
005	DP-27 (42-46')	Aqueous	Toluene	8260B	1.5		ug/L	13
005	DP-27 (42-46')	Aqueous	Trichloroethene	8260B	0.49	J	ug/L	14
005	DP-27 (42-46')	Aqueous	Xylenes (total)	8260B	0.75		ug/L	14
006	TRIP BLANK	Aqueous	Acetone	8260B	5.5	J	ug/L	15

(34 detections)

Volatile Organic Compounds by GC/MS

Client: ARCADIS U.S., Inc.
Laboratory ID: LK06009-001
Description: DP-28 (30-34')
Matrix: Aqueous
Date Sampled: 11/05/2010 0811
Date Received: 11/06/2010

Run	Prep Method	Analytical Method	Dilution	Analysis Date	Analyst	Prep Date	Batch
1	5030B	8260B	1	11/11/2010 1032	DLB		46375

Parameter	CAS Number	Analytical Method	Result	Q	PQL	MDL	Units	Run
Acetone	67-64-1	8260B	7.0	J	10	3.3	ug/L	1
Benzene	71-43-2	8260B	0.26	J	0.50	0.027	ug/L	1
Bromodichloromethane	75-27-4	8260B	ND		0.50	0.17	ug/L	1
Bromoform	75-25-2	8260B	ND		0.50	0.010	ug/L	1
Bromomethane (Methyl bromide)	74-83-9	8260B	ND		0.50	0.20	ug/L	1
2-Butanone (MEK)	78-93-3	8260B	ND		10	2.0	ug/L	1
Carbon disulfide	75-15-0	8260B	ND		0.50	0.097	ug/L	1
Carbon tetrachloride	56-23-5	8260B	ND		0.50	0.085	ug/L	1
Chlorobenzene	108-90-7	8260B	ND		0.50	0.17	ug/L	1
Chloroethane	75-00-3	8260B	ND		0.50	0.17	ug/L	1
Chloroform	67-66-3	8260B	ND		0.50	0.17	ug/L	1
Chloromethane (Methyl chloride)	74-87-3	8260B	ND		0.50	0.17	ug/L	1
Cyclohexane	110-82-7	8260B	ND		0.50	0.30	ug/L	1
1,2-Dibromo-3-chloropropane (DBCP)	96-12-8	8260B	ND		0.50	0.069	ug/L	1
Dibromochloromethane	124-48-1	8260B	ND		0.50	0.17	ug/L	1
1,2-Dibromoethane (EDB)	106-93-4	8260B	ND		0.50	0.061	ug/L	1
1,3-Dichlorobenzene	541-73-1	8260B	ND		0.50	0.17	ug/L	1
1,2-Dichlorobenzene	95-50-1	8260B	ND		0.50	0.17	ug/L	1
1,4-Dichlorobenzene	106-46-7	8260B	ND		0.50	0.17	ug/L	1
Dichlorodifluoromethane	75-71-8	8260B	ND		0.50	0.071	ug/L	1
1,1-Dichloroethane	75-34-3	8260B	ND		0.50	0.054	ug/L	1
1,2-Dichloroethane	107-06-2	8260B	ND		0.50	0.023	ug/L	1
trans-1,2-Dichloroethene	156-60-5	8260B	3.7		0.50	0.079	ug/L	1
1,1-Dichloroethene	75-35-4	8260B	0.31	J	0.50	0.094	ug/L	1
cis-1,2-Dichloroethene	156-59-2	8260B	60		0.50	0.087	ug/L	1
1,2-Dichloropropane	78-87-5	8260B	ND		0.50	0.081	ug/L	1
trans-1,3-Dichloropropene	10061-02-6	8260B	ND		0.50	0.18	ug/L	1
cis-1,3-Dichloropropene	10061-01-5	8260B	ND		0.50	0.090	ug/L	1
Ethylbenzene	100-41-4	8260B	ND		0.50	0.17	ug/L	1
2-Hexanone	591-78-6	8260B	ND		10	0.27	ug/L	1
Isopropylbenzene	98-82-8	8260B	ND		0.50	0.029	ug/L	1
Methyl acetate	79-20-9	8260B	ND		1.0	0.30	ug/L	1
Methyl tertiary butyl ether (MTBE)	1634-04-4	8260B	ND		0.50	0.019	ug/L	1
4-Methyl-2-pentanone	108-10-1	8260B	ND		10	0.31	ug/L	1
Methylcyclohexane	108-87-2	8260B	ND		5.0	0.95	ug/L	1
Methylene chloride	75-09-2	8260B	ND		0.50	0.17	ug/L	1
Styrene	100-42-5	8260B	ND		0.50	0.015	ug/L	1
1,1,2,2-Tetrachloroethane	79-34-5	8260B	ND		0.50	0.013	ug/L	1
Tetrachloroethene	127-18-4	8260B	5.0		0.50	0.014	ug/L	1
Toluene	108-88-3	8260B	0.66	B	0.50	0.17	ug/L	1
1,1,2-Trichloro-1,2,2-Trifluoroethane	76-13-1	8260B	ND		0.50	0.30	ug/L	1
1,2,4-Trichlorobenzene	120-82-1	8260B	ND		0.50	0.17	ug/L	1
1,1,1-Trichloroethane	71-55-6	8260B	ND		0.50	0.029	ug/L	1
1,1,2-Trichloroethane	79-00-5	8260B	ND		0.50	0.031	ug/L	1

PQL = Practical quantitation limit
B = Detected in the method blank
E = Quantitation of compound exceeded the calibration range
ND = Not detected at or above the MDL
J = Estimated result < PQL and ≥ MDL
P = The RPD between two GC columns exceeds 40%
Where applicable, all soil sample analysis are reported on a dry weight basis unless flagged with a "W"
N = Recovery is out of criteria
H = Out of holding time

Volatile Organic Compounds by GC/MS

Client: ARCADIS U.S., Inc.
Laboratory ID: LK06009-001
Description: DP-28 (30-34')
Matrix: Aqueous
Date Sampled: 11/05/2010 0811
Date Received: 11/06/2010

Run	Prep Method	Analytical Method	Dilution	Analysis Date	Analyst	Prep Date	Batch
1	5030B	8260B	1	11/11/2010 1032	DLB		46375

Parameter	CAS Number	Analytical Method	Result	Q	PQL	MDL	Units	Run
Trichloroethene	79-01-6	8260B	110		0.50	0.024	ug/L	1
Trichlorofluoromethane	75-69-4	8260B	ND		0.50	0.051	ug/L	1
Vinyl chloride	75-01-4	8260B	ND		0.50	0.065	ug/L	1
Xylenes (total)	1330-20-7	8260B	ND		0.50	0.17	ug/L	1

Surrogate	Q	Run 1 % Recovery	Acceptance Limits
1,2-Dichloroethane-d4		96	70-130
Bromofluorobenzene		93	70-130
Toluene-d8		109	70-130

PQL = Practical quantitation limit
B = Detected in the method blank
E = Quantitation of compound exceeded the calibration range
ND = Not detected at or above the MDL
J = Estimated result < PQL and ≥ MDL
P = The RPD between two GC columns exceeds 40%
Where applicable, all soil sample analysis are reported on a dry weight basis unless flagged with a "W"
N = Recovery is out of criteria
H = Out of holding time

Volatile Organic Compounds by GC/MS

Client: ARCADIS U.S., Inc.
Laboratory ID: LK06009-002
Description: DP-28 (42-46')
Matrix: Aqueous
Date Sampled: 11/05/2010 0946
Date Received: 11/06/2010

Run	Prep Method	Analytical Method	Dilution	Analysis Date	Analyst	Prep Date	Batch
1	5030B	8260B	1	11/12/2010 0342	DLB		46459

Parameter	CAS Number	Analytical Method	Result	Q	PQL	MDL	Units	Run
Acetone	67-64-1	8260B	30		10	3.3	ug/L	1
Benzene	71-43-2	8260B	0.47	J	0.50	0.027	ug/L	1
Bromodichloromethane	75-27-4	8260B	ND		0.50	0.17	ug/L	1
Bromoform	75-25-2	8260B	ND		0.50	0.010	ug/L	1
Bromomethane (Methyl bromide)	74-83-9	8260B	ND		0.50	0.20	ug/L	1
2-Butanone (MEK)	78-93-3	8260B	4.6	J	10	2.0	ug/L	1
Carbon disulfide	75-15-0	8260B	0.39	J	0.50	0.097	ug/L	1
Carbon tetrachloride	56-23-5	8260B	ND		0.50	0.085	ug/L	1
Chlorobenzene	108-90-7	8260B	ND		0.50	0.17	ug/L	1
Chloroethane	75-00-3	8260B	ND		0.50	0.17	ug/L	1
Chloroform	67-66-3	8260B	ND		0.50	0.17	ug/L	1
Chloromethane (Methyl chloride)	74-87-3	8260B	1.2		0.50	0.17	ug/L	1
Cyclohexane	110-82-7	8260B	ND		0.50	0.30	ug/L	1
1,2-Dibromo-3-chloropropane (DBCP)	96-12-8	8260B	ND		0.50	0.069	ug/L	1
Dibromochloromethane	124-48-1	8260B	ND		0.50	0.17	ug/L	1
1,2-Dibromoethane (EDB)	106-93-4	8260B	ND		0.50	0.061	ug/L	1
1,3-Dichlorobenzene	541-73-1	8260B	ND		0.50	0.17	ug/L	1
1,2-Dichlorobenzene	95-50-1	8260B	ND		0.50	0.17	ug/L	1
1,4-Dichlorobenzene	106-46-7	8260B	ND		0.50	0.17	ug/L	1
Dichlorodifluoromethane	75-71-8	8260B	0.21	J	0.50	0.071	ug/L	1
1,1-Dichloroethane	75-34-3	8260B	ND		0.50	0.054	ug/L	1
1,2-Dichloroethane	107-06-2	8260B	ND		0.50	0.023	ug/L	1
trans-1,2-Dichloroethene	156-60-5	8260B	ND		0.50	0.079	ug/L	1
1,1-Dichloroethene	75-35-4	8260B	ND		0.50	0.094	ug/L	1
cis-1,2-Dichloroethene	156-59-2	8260B	ND		0.50	0.087	ug/L	1
1,2-Dichloropropane	78-87-5	8260B	ND		0.50	0.081	ug/L	1
trans-1,3-Dichloropropene	10061-02-6	8260B	ND		0.50	0.18	ug/L	1
cis-1,3-Dichloropropene	10061-01-5	8260B	ND		0.50	0.090	ug/L	1
Ethylbenzene	100-41-4	8260B	ND		0.50	0.17	ug/L	1
2-Hexanone	591-78-6	8260B	ND		10	0.27	ug/L	1
Isopropylbenzene	98-82-8	8260B	ND		0.50	0.029	ug/L	1
Methyl acetate	79-20-9	8260B	ND		1.0	0.30	ug/L	1
Methyl tertiary butyl ether (MTBE)	1634-04-4	8260B	ND		0.50	0.019	ug/L	1
4-Methyl-2-pentanone	108-10-1	8260B	ND		10	0.31	ug/L	1
Methylcyclohexane	108-87-2	8260B	ND		5.0	0.95	ug/L	1
Methylene chloride	75-09-2	8260B	ND		0.50	0.17	ug/L	1
Styrene	100-42-5	8260B	ND		0.50	0.015	ug/L	1
1,1,2,2-Tetrachloroethane	79-34-5	8260B	ND		0.50	0.013	ug/L	1
Tetrachloroethene	127-18-4	8260B	ND		0.50	0.014	ug/L	1
Toluene	108-88-3	8260B	0.55		0.50	0.17	ug/L	1
1,1,2-Trichloro-1,2,2-Trifluoroethane	76-13-1	8260B	ND		0.50	0.30	ug/L	1
1,2,4-Trichlorobenzene	120-82-1	8260B	ND		0.50	0.17	ug/L	1
1,1,1-Trichloroethane	71-55-6	8260B	ND		0.50	0.029	ug/L	1
1,1,2-Trichloroethane	79-00-5	8260B	ND		0.50	0.031	ug/L	1

PQL = Practical quantitation limit
B = Detected in the method blank
E = Quantitation of compound exceeded the calibration range
ND = Not detected at or above the MDL
J = Estimated result < PQL and ≥ MDL
P = The RPD between two GC columns exceeds 40%
Where applicable, all soil sample analysis are reported on a dry weight basis unless flagged with a "W"
N = Recovery is out of criteria
H = Out of holding time

Volatile Organic Compounds by GC/MS

Client: ARCADIS U.S., Inc.
Laboratory ID: LK06009-002
Description: DP-28 (42-46')
Matrix: Aqueous
Date Sampled: 11/05/2010 0946
Date Received: 11/06/2010

Run	Prep Method	Analytical Method	Dilution	Analysis Date	Analyst	Prep Date	Batch
1	5030B	8260B	1	11/12/2010 0342	DLB		46459

Parameter	CAS Number	Analytical Method	Result	Q	PQL	MDL	Units	Run
Trichloroethene	79-01-6	8260B	ND		0.50	0.024	ug/L	1
Trichlorofluoromethane	75-69-4	8260B	ND		0.50	0.051	ug/L	1
Vinyl chloride	75-01-4	8260B	ND		0.50	0.065	ug/L	1
Xylenes (total)	1330-20-7	8260B	0.47	J	0.50	0.17	ug/L	1

Surrogate	Q	Run 1 % Recovery	Acceptance Limits
1,2-Dichloroethane-d4		82	70-130
Bromofluorobenzene		78	70-130
Toluene-d8		81	70-130

PQL = Practical quantitation limit
B = Detected in the method blank
E = Quantitation of compound exceeded the calibration range
ND = Not detected at or above the MDL
J = Estimated result < PQL and ≥ MDL
P = The RPD between two GC columns exceeds 40%
Where applicable, all soil sample analysis are reported on a dry weight basis unless flagged with a "W"
N = Recovery is out of criteria
H = Out of holding time

Volatile Organic Compounds by GC/MS

Client: ARCADIS U.S., Inc.
Laboratory ID: LK06009-003
Description: DP-27 (30-34')
Matrix: Aqueous
Date Sampled: 11/05/2010 1058
Date Received: 11/06/2010

Run	Prep Method	Analytical Method	Dilution	Analysis Date	Analyst	Prep Date	Batch
1	5030B	8260B	1	11/11/2010 1056	DLB		46375

Parameter	CAS Number	Analytical Method	Result	Q	PQL	MDL	Units	Run
Acetone	67-64-1	8260B	7.3	J	10	3.3	ug/L	1
Benzene	71-43-2	8260B	0.40	J	0.50	0.027	ug/L	1
Bromodichloromethane	75-27-4	8260B	ND		0.50	0.17	ug/L	1
Bromoform	75-25-2	8260B	ND		0.50	0.010	ug/L	1
Bromomethane (Methyl bromide)	74-83-9	8260B	ND		0.50	0.20	ug/L	1
2-Butanone (MEK)	78-93-3	8260B	ND		10	2.0	ug/L	1
Carbon disulfide	75-15-0	8260B	ND		0.50	0.097	ug/L	1
Carbon tetrachloride	56-23-5	8260B	ND		0.50	0.085	ug/L	1
Chlorobenzene	108-90-7	8260B	ND		0.50	0.17	ug/L	1
Chloroethane	75-00-3	8260B	ND		0.50	0.17	ug/L	1
Chloroform	67-66-3	8260B	ND		0.50	0.17	ug/L	1
Chloromethane (Methyl chloride)	74-87-3	8260B	ND		0.50	0.17	ug/L	1
Cyclohexane	110-82-7	8260B	ND		0.50	0.30	ug/L	1
1,2-Dibromo-3-chloropropane (DBCP)	96-12-8	8260B	ND		0.50	0.069	ug/L	1
Dibromochloromethane	124-48-1	8260B	ND		0.50	0.17	ug/L	1
1,2-Dibromoethane (EDB)	106-93-4	8260B	ND		0.50	0.061	ug/L	1
1,3-Dichlorobenzene	541-73-1	8260B	ND		0.50	0.17	ug/L	1
1,2-Dichlorobenzene	95-50-1	8260B	ND		0.50	0.17	ug/L	1
1,4-Dichlorobenzene	106-46-7	8260B	ND		0.50	0.17	ug/L	1
Dichlorodifluoromethane	75-71-8	8260B	ND		0.50	0.071	ug/L	1
1,1-Dichloroethane	75-34-3	8260B	ND		0.50	0.054	ug/L	1
1,2-Dichloroethane	107-06-2	8260B	ND		0.50	0.023	ug/L	1
trans-1,2-Dichloroethene	156-60-5	8260B	ND		0.50	0.079	ug/L	1
1,1-Dichloroethene	75-35-4	8260B	ND		0.50	0.094	ug/L	1
cis-1,2-Dichloroethene	156-59-2	8260B	10		0.50	0.087	ug/L	1
1,2-Dichloropropane	78-87-5	8260B	ND		0.50	0.081	ug/L	1
trans-1,3-Dichloropropene	10061-02-6	8260B	ND		0.50	0.18	ug/L	1
cis-1,3-Dichloropropene	10061-01-5	8260B	ND		0.50	0.090	ug/L	1
Ethylbenzene	100-41-4	8260B	ND		0.50	0.17	ug/L	1
2-Hexanone	591-78-6	8260B	ND		10	0.27	ug/L	1
Isopropylbenzene	98-82-8	8260B	ND		0.50	0.029	ug/L	1
Methyl acetate	79-20-9	8260B	ND		1.0	0.30	ug/L	1
Methyl tertiary butyl ether (MTBE)	1634-04-4	8260B	ND		0.50	0.019	ug/L	1
4-Methyl-2-pentanone	108-10-1	8260B	ND		10	0.31	ug/L	1
Methylcyclohexane	108-87-2	8260B	ND		5.0	0.95	ug/L	1
Methylene chloride	75-09-2	8260B	ND		0.50	0.17	ug/L	1
Styrene	100-42-5	8260B	ND		0.50	0.015	ug/L	1
1,1,2,2-Tetrachloroethane	79-34-5	8260B	ND		0.50	0.013	ug/L	1
Tetrachloroethene	127-18-4	8260B	0.23	J	0.50	0.014	ug/L	1
Toluene	108-88-3	8260B	0.65	B	0.50	0.17	ug/L	1
1,1,2-Trichloro-1,2,2-Trifluoroethane	76-13-1	8260B	ND		0.50	0.30	ug/L	1
1,2,4-Trichlorobenzene	120-82-1	8260B	ND		0.50	0.17	ug/L	1
1,1,1-Trichloroethane	71-55-6	8260B	ND		0.50	0.029	ug/L	1
1,1,2-Trichloroethane	79-00-5	8260B	ND		0.50	0.031	ug/L	1

PQL = Practical quantitation limit
B = Detected in the method blank
E = Quantitation of compound exceeded the calibration range
ND = Not detected at or above the MDL
J = Estimated result < PQL and ≥ MDL
P = The RPD between two GC columns exceeds 40%
Where applicable, all soil sample analysis are reported on a dry weight basis unless flagged with a "W"
N = Recovery is out of criteria
H = Out of holding time

Volatile Organic Compounds by GC/MS

Client: ARCADIS U.S., Inc.
Laboratory ID: LK06009-003
Description: DP-27 (30-34')
Matrix: Aqueous
Date Sampled: 11/05/2010 1058
Date Received: 11/06/2010

Run	Prep Method	Analytical Method	Dilution	Analysis Date	Analyst	Prep Date	Batch
1	5030B	8260B	1	11/11/2010 1056	DLB		46375

Parameter	CAS Number	Analytical Method	Result	Q	PQL	MDL	Units	Run
Trichloroethene	79-01-6	8260B	9.5		0.50	0.024	ug/L	1
Trichlorofluoromethane	75-69-4	8260B	ND		0.50	0.051	ug/L	1
Vinyl chloride	75-01-4	8260B	ND		0.50	0.065	ug/L	1
Xylenes (total)	1330-20-7	8260B	ND		0.50	0.17	ug/L	1

Surrogate	Q	Run 1 % Recovery	Acceptance Limits
1,2-Dichloroethane-d4		97	70-130
Bromofluorobenzene		92	70-130
Toluene-d8		109	70-130

PQL = Practical quantitation limit
B = Detected in the method blank
E = Quantitation of compound exceeded the calibration range
ND = Not detected at or above the MDL
J = Estimated result < PQL and ≥ MDL
P = The RPD between two GC columns exceeds 40%
Where applicable, all soil sample analysis are reported on a dry weight basis unless flagged with a "W"
N = Recovery is out of criteria
H = Out of holding time

Volatile Organic Compounds by GC/MS

Client: ARCADIS U.S., Inc.
Laboratory ID: LK06009-004
Description: DP-27 (36-40')
Matrix: Aqueous
Date Sampled: 11/05/2010 1148
Date Received: 11/06/2010

Run	Prep Method	Analytical Method	Dilution	Analysis Date	Analyst	Prep Date	Batch
1	5030B	8260B	1	11/11/2010 1130	DLB		46375

Parameter	CAS Number	Analytical Method	Result	Q	PQL	MDL	Units	Run
Acetone	67-64-1	8260B	6.7	J	10	3.3	ug/L	1
Benzene	71-43-2	8260B	0.21	J	0.50	0.027	ug/L	1
Bromodichloromethane	75-27-4	8260B	ND		0.50	0.17	ug/L	1
Bromoform	75-25-2	8260B	ND		0.50	0.010	ug/L	1
Bromomethane (Methyl bromide)	74-83-9	8260B	ND		0.50	0.20	ug/L	1
2-Butanone (MEK)	78-93-3	8260B	ND		10	2.0	ug/L	1
Carbon disulfide	75-15-0	8260B	ND		0.50	0.097	ug/L	1
Carbon tetrachloride	56-23-5	8260B	ND		0.50	0.085	ug/L	1
Chlorobenzene	108-90-7	8260B	ND		0.50	0.17	ug/L	1
Chloroethane	75-00-3	8260B	ND		0.50	0.17	ug/L	1
Chloroform	67-66-3	8260B	ND		0.50	0.17	ug/L	1
Chloromethane (Methyl chloride)	74-87-3	8260B	ND		0.50	0.17	ug/L	1
Cyclohexane	110-82-7	8260B	ND		0.50	0.30	ug/L	1
1,2-Dibromo-3-chloropropane (DBCP)	96-12-8	8260B	ND		0.50	0.069	ug/L	1
Dibromochloromethane	124-48-1	8260B	ND		0.50	0.17	ug/L	1
1,2-Dibromoethane (EDB)	106-93-4	8260B	ND		0.50	0.061	ug/L	1
1,3-Dichlorobenzene	541-73-1	8260B	ND		0.50	0.17	ug/L	1
1,2-Dichlorobenzene	95-50-1	8260B	ND		0.50	0.17	ug/L	1
1,4-Dichlorobenzene	106-46-7	8260B	ND		0.50	0.17	ug/L	1
Dichlorodifluoromethane	75-71-8	8260B	ND		0.50	0.071	ug/L	1
1,1-Dichloroethane	75-34-3	8260B	ND		0.50	0.054	ug/L	1
1,2-Dichloroethane	107-06-2	8260B	ND		0.50	0.023	ug/L	1
trans-1,2-Dichloroethene	156-60-5	8260B	ND		0.50	0.079	ug/L	1
1,1-Dichloroethene	75-35-4	8260B	ND		0.50	0.094	ug/L	1
cis-1,2-Dichloroethene	156-59-2	8260B	0.24	J	0.50	0.087	ug/L	1
1,2-Dichloropropane	78-87-5	8260B	ND		0.50	0.081	ug/L	1
trans-1,3-Dichloropropene	10061-02-6	8260B	ND		0.50	0.18	ug/L	1
cis-1,3-Dichloropropene	10061-01-5	8260B	ND		0.50	0.090	ug/L	1
Ethylbenzene	100-41-4	8260B	ND		0.50	0.17	ug/L	1
2-Hexanone	591-78-6	8260B	ND		10	0.27	ug/L	1
Isopropylbenzene	98-82-8	8260B	ND		0.50	0.029	ug/L	1
Methyl acetate	79-20-9	8260B	ND		1.0	0.30	ug/L	1
Methyl tertiary butyl ether (MTBE)	1634-04-4	8260B	ND		0.50	0.019	ug/L	1
4-Methyl-2-pentanone	108-10-1	8260B	ND		10	0.31	ug/L	1
Methylcyclohexane	108-87-2	8260B	ND		5.0	0.95	ug/L	1
Methylene chloride	75-09-2	8260B	ND		0.50	0.17	ug/L	1
Styrene	100-42-5	8260B	ND		0.50	0.015	ug/L	1
1,1,2,2-Tetrachloroethane	79-34-5	8260B	ND		0.50	0.013	ug/L	1
Tetrachloroethene	127-18-4	8260B	ND		0.50	0.014	ug/L	1
Toluene	108-88-3	8260B	0.90	B	0.50	0.17	ug/L	1
1,1,2-Trichloro-1,2,2-Trifluoroethane	76-13-1	8260B	ND		0.50	0.30	ug/L	1
1,2,4-Trichlorobenzene	120-82-1	8260B	ND		0.50	0.17	ug/L	1
1,1,1-Trichloroethane	71-55-6	8260B	ND		0.50	0.029	ug/L	1
1,1,2-Trichloroethane	79-00-5	8260B	ND		0.50	0.031	ug/L	1

PQL = Practical quantitation limit
B = Detected in the method blank
E = Quantitation of compound exceeded the calibration range
ND = Not detected at or above the MDL
J = Estimated result < PQL and ≥ MDL
P = The RPD between two GC columns exceeds 40%
Where applicable, all soil sample analysis are reported on a dry weight basis unless flagged with a "W"
N = Recovery is out of criteria
H = Out of holding time

Volatile Organic Compounds by GC/MS

Client: ARCADIS U.S., Inc.
Laboratory ID: LK06009-004
Description: DP-27 (36-40')
Matrix: Aqueous
Date Sampled: 11/05/2010 1148
Date Received: 11/06/2010

Run	Prep Method	Analytical Method	Dilution	Analysis Date	Analyst	Prep Date	Batch
1	5030B	8260B	1	11/11/2010 1130	DLB		46375

Parameter	CAS Number	Analytical Method	Result	Q	PQL	MDL	Units	Run
Trichloroethene	79-01-6	8260B	0.31	J	0.50	0.024	ug/L	1
Trichlorofluoromethane	75-69-4	8260B	ND		0.50	0.051	ug/L	1
Vinyl chloride	75-01-4	8260B	ND		0.50	0.065	ug/L	1
Xylenes (total)	1330-20-7	8260B	ND		0.50	0.17	ug/L	1

Surrogate	Q	Run 1 % Recovery	Acceptance Limits
1,2-Dichloroethane-d4		90	70-130
Bromofluorobenzene		94	70-130
Toluene-d8		113	70-130

PQL = Practical quantitation limit
B = Detected in the method blank
E = Quantitation of compound exceeded the calibration range
ND = Not detected at or above the MDL
J = Estimated result < PQL and ≥ MDL
P = The RPD between two GC columns exceeds 40%
Where applicable, all soil sample analysis are reported on a dry weight basis unless flagged with a "W"
N = Recovery is out of criteria
H = Out of holding time

Volatile Organic Compounds by GC/MS

Client: ARCADIS U.S., Inc.
Laboratory ID: LK06009-005
Description: DP-27 (42-46')
Matrix: Aqueous
Date Sampled: 11/05/2010 1212
Date Received: 11/06/2010

Run	Prep Method	Analytical Method	Dilution	Analysis Date	Analyst	Prep Date	Batch
1	5030B	8260B	1	11/12/2010 0404	DLB		46459

Parameter	CAS Number	Analytical Method	Result	Q	PQL	MDL	Units	Run
Acetone	67-64-1	8260B	15		10	3.3	ug/L	1
Benzene	71-43-2	8260B	0.89		0.50	0.027	ug/L	1
Bromodichloromethane	75-27-4	8260B	ND		0.50	0.17	ug/L	1
Bromoform	75-25-2	8260B	ND		0.50	0.010	ug/L	1
Bromomethane (Methyl bromide)	74-83-9	8260B	ND		0.50	0.20	ug/L	1
2-Butanone (MEK)	78-93-3	8260B	ND		10	2.0	ug/L	1
Carbon disulfide	75-15-0	8260B	0.40	J	0.50	0.097	ug/L	1
Carbon tetrachloride	56-23-5	8260B	ND		0.50	0.085	ug/L	1
Chlorobenzene	108-90-7	8260B	ND		0.50	0.17	ug/L	1
Chloroethane	75-00-3	8260B	ND		0.50	0.17	ug/L	1
Chloroform	67-66-3	8260B	ND		0.50	0.17	ug/L	1
Chloromethane (Methyl chloride)	74-87-3	8260B	ND		0.50	0.17	ug/L	1
Cyclohexane	110-82-7	8260B	ND		0.50	0.30	ug/L	1
1,2-Dibromo-3-chloropropane (DBCP)	96-12-8	8260B	ND		0.50	0.069	ug/L	1
Dibromochloromethane	124-48-1	8260B	ND		0.50	0.17	ug/L	1
1,2-Dibromoethane (EDB)	106-93-4	8260B	ND		0.50	0.061	ug/L	1
1,3-Dichlorobenzene	541-73-1	8260B	ND		0.50	0.17	ug/L	1
1,2-Dichlorobenzene	95-50-1	8260B	ND		0.50	0.17	ug/L	1
1,4-Dichlorobenzene	106-46-7	8260B	ND		0.50	0.17	ug/L	1
Dichlorodifluoromethane	75-71-8	8260B	ND		0.50	0.071	ug/L	1
1,1-Dichloroethane	75-34-3	8260B	ND		0.50	0.054	ug/L	1
1,2-Dichloroethane	107-06-2	8260B	ND		0.50	0.023	ug/L	1
trans-1,2-Dichloroethene	156-60-5	8260B	ND		0.50	0.079	ug/L	1
1,1-Dichloroethene	75-35-4	8260B	ND		0.50	0.094	ug/L	1
cis-1,2-Dichloroethene	156-59-2	8260B	ND		0.50	0.087	ug/L	1
1,2-Dichloropropane	78-87-5	8260B	ND		0.50	0.081	ug/L	1
trans-1,3-Dichloropropene	10061-02-6	8260B	ND		0.50	0.18	ug/L	1
cis-1,3-Dichloropropene	10061-01-5	8260B	ND		0.50	0.090	ug/L	1
Ethylbenzene	100-41-4	8260B	ND		0.50	0.17	ug/L	1
2-Hexanone	591-78-6	8260B	ND		10	0.27	ug/L	1
Isopropylbenzene	98-82-8	8260B	ND		0.50	0.029	ug/L	1
Methyl acetate	79-20-9	8260B	ND		1.0	0.30	ug/L	1
Methyl tertiary butyl ether (MTBE)	1634-04-4	8260B	ND		0.50	0.019	ug/L	1
4-Methyl-2-pentanone	108-10-1	8260B	ND		10	0.31	ug/L	1
Methylcyclohexane	108-87-2	8260B	ND		5.0	0.95	ug/L	1
Methylene chloride	75-09-2	8260B	ND		0.50	0.17	ug/L	1
Styrene	100-42-5	8260B	ND		0.50	0.015	ug/L	1
1,1,2,2-Tetrachloroethane	79-34-5	8260B	ND		0.50	0.013	ug/L	1
Tetrachloroethene	127-18-4	8260B	ND		0.50	0.014	ug/L	1
Toluene	108-88-3	8260B	1.5		0.50	0.17	ug/L	1
1,1,2-Trichloro-1,2,2-Trifluoroethane	76-13-1	8260B	ND		0.50	0.30	ug/L	1
1,2,4-Trichlorobenzene	120-82-1	8260B	ND		0.50	0.17	ug/L	1
1,1,1-Trichloroethane	71-55-6	8260B	ND		0.50	0.029	ug/L	1
1,1,2-Trichloroethane	79-00-5	8260B	ND		0.50	0.031	ug/L	1

PQL = Practical quantitation limit
B = Detected in the method blank
E = Quantitation of compound exceeded the calibration range
ND = Not detected at or above the MDL
J = Estimated result < PQL and ≥ MDL
P = The RPD between two GC columns exceeds 40%
Where applicable, all soil sample analysis are reported on a dry weight basis unless flagged with a "W"
N = Recovery is out of criteria
H = Out of holding time

Volatile Organic Compounds by GC/MS

Client: ARCADIS U.S., Inc.
Laboratory ID: LK06009-005
Description: DP-27 (42-46')
Matrix: Aqueous
Date Sampled: 11/05/2010 1212
Date Received: 11/06/2010

Run	Prep Method	Analytical Method	Dilution	Analysis Date	Analyst	Prep Date	Batch
1	5030B	8260B	1	11/12/2010 0404	DLB		46459

Parameter	CAS Number	Analytical Method	Result	Q	PQL	MDL	Units	Run
Trichloroethene	79-01-6	8260B	0.49	J	0.50	0.024	ug/L	1
Trichlorofluoromethane	75-69-4	8260B	ND		0.50	0.051	ug/L	1
Vinyl chloride	75-01-4	8260B	ND		0.50	0.065	ug/L	1
Xylenes (total)	1330-20-7	8260B	0.75		0.50	0.17	ug/L	1

Surrogate	Q	Run 1 % Recovery	Acceptance Limits
1,2-Dichloroethane-d4		84	70-130
Bromofluorobenzene		83	70-130
Toluene-d8		77	70-130

PQL = Practical quantitation limit
B = Detected in the method blank
E = Quantitation of compound exceeded the calibration range
ND = Not detected at or above the MDL
J = Estimated result < PQL and ≥ MDL
P = The RPD between two GC columns exceeds 40%
Where applicable, all soil sample analysis are reported on a dry weight basis unless flagged with a "W"
N = Recovery is out of criteria
H = Out of holding time

Volatile Organic Compounds by GC/MS

Client: ARCADIS U.S., Inc.
Laboratory ID: LK06009-006
Description: TRIP BLANK
Matrix: Aqueous
Date Sampled: 11/06/2010 0915
Date Received: 11/06/2010

Run	Prep Method	Analytical Method	Dilution	Analysis Date	Analyst	Prep Date	Batch
1	5030B	8260B	1	11/12/2010 0450	DLB		46459

Parameter	CAS Number	Analytical Method	Result	Q	PQL	MDL	Units	Run
Acetone	67-64-1	8260B	5.5	J	10	3.3	ug/L	1
Benzene	71-43-2	8260B	ND		0.50	0.027	ug/L	1
Bromodichloromethane	75-27-4	8260B	ND		0.50	0.17	ug/L	1
Bromoform	75-25-2	8260B	ND		0.50	0.010	ug/L	1
Bromomethane (Methyl bromide)	74-83-9	8260B	ND		0.50	0.20	ug/L	1
2-Butanone (MEK)	78-93-3	8260B	ND		10	2.0	ug/L	1
Carbon disulfide	75-15-0	8260B	ND		0.50	0.097	ug/L	1
Carbon tetrachloride	56-23-5	8260B	ND		0.50	0.085	ug/L	1
Chlorobenzene	108-90-7	8260B	ND		0.50	0.17	ug/L	1
Chloroethane	75-00-3	8260B	ND		0.50	0.17	ug/L	1
Chloroform	67-66-3	8260B	ND		0.50	0.17	ug/L	1
Chloromethane (Methyl chloride)	74-87-3	8260B	ND		0.50	0.17	ug/L	1
Cyclohexane	110-82-7	8260B	ND		0.50	0.30	ug/L	1
1,2-Dibromo-3-chloropropane (DBCP)	96-12-8	8260B	ND		0.50	0.069	ug/L	1
Dibromochloromethane	124-48-1	8260B	ND		0.50	0.17	ug/L	1
1,2-Dibromoethane (EDB)	106-93-4	8260B	ND		0.50	0.061	ug/L	1
1,3-Dichlorobenzene	541-73-1	8260B	ND		0.50	0.17	ug/L	1
1,2-Dichlorobenzene	95-50-1	8260B	ND		0.50	0.17	ug/L	1
1,4-Dichlorobenzene	106-46-7	8260B	ND		0.50	0.17	ug/L	1
Dichlorodifluoromethane	75-71-8	8260B	ND		0.50	0.071	ug/L	1
1,1-Dichloroethane	75-34-3	8260B	ND		0.50	0.054	ug/L	1
1,2-Dichloroethane	107-06-2	8260B	ND		0.50	0.023	ug/L	1
trans-1,2-Dichloroethene	156-60-5	8260B	ND		0.50	0.079	ug/L	1
1,1-Dichloroethene	75-35-4	8260B	ND		0.50	0.094	ug/L	1
cis-1,2-Dichloroethene	156-59-2	8260B	ND		0.50	0.087	ug/L	1
1,2-Dichloropropane	78-87-5	8260B	ND		0.50	0.081	ug/L	1
trans-1,3-Dichloropropene	10061-02-6	8260B	ND		0.50	0.18	ug/L	1
cis-1,3-Dichloropropene	10061-01-5	8260B	ND		0.50	0.090	ug/L	1
Ethylbenzene	100-41-4	8260B	ND		0.50	0.17	ug/L	1
2-Hexanone	591-78-6	8260B	ND		10	0.27	ug/L	1
Isopropylbenzene	98-82-8	8260B	ND		0.50	0.029	ug/L	1
Methyl acetate	79-20-9	8260B	ND		1.0	0.30	ug/L	1
Methyl tertiary butyl ether (MTBE)	1634-04-4	8260B	ND		0.50	0.019	ug/L	1
4-Methyl-2-pentanone	108-10-1	8260B	ND		10	0.31	ug/L	1
Methylcyclohexane	108-87-2	8260B	ND		5.0	0.95	ug/L	1
Methylene chloride	75-09-2	8260B	ND		0.50	0.17	ug/L	1
Styrene	100-42-5	8260B	ND		0.50	0.015	ug/L	1
1,1,2,2-Tetrachloroethane	79-34-5	8260B	ND		0.50	0.013	ug/L	1
Tetrachloroethene	127-18-4	8260B	ND		0.50	0.014	ug/L	1
Toluene	108-88-3	8260B	ND		0.50	0.17	ug/L	1
1,1,2-Trichloro-1,2,2-Trifluoroethane	76-13-1	8260B	ND		0.50	0.30	ug/L	1
1,2,4-Trichlorobenzene	120-82-1	8260B	ND		0.50	0.17	ug/L	1
1,1,1-Trichloroethane	71-55-6	8260B	ND		0.50	0.029	ug/L	1
1,1,2-Trichloroethane	79-00-5	8260B	ND		0.50	0.031	ug/L	1

PQL = Practical quantitation limit
B = Detected in the method blank
E = Quantitation of compound exceeded the calibration range
ND = Not detected at or above the MDL
J = Estimated result < PQL and ≥ MDL
P = The RPD between two GC columns exceeds 40%
Where applicable, all soil sample analysis are reported on a dry weight basis unless flagged with a "W"
N = Recovery is out of criteria
H = Out of holding time

Volatile Organic Compounds by GC/MS

Client: ARCADIS U.S., Inc.
Laboratory ID: LK06009-006
Description: TRIP BLANK
Matrix: Aqueous
Date Sampled: 11/06/2010 0915
Date Received: 11/06/2010

Run	Prep Method	Analytical Method	Dilution	Analysis Date	Analyst	Prep Date	Batch
1	5030B	8260B	1	11/12/2010 0450	DLB		46459

Parameter	CAS Number	Analytical Method	Result	Q	PQL	MDL	Units	Run
Trichloroethene	79-01-6	8260B	ND		0.50	0.024	ug/L	1
Trichlorofluoromethane	75-69-4	8260B	ND		0.50	0.051	ug/L	1
Vinyl chloride	75-01-4	8260B	ND		0.50	0.065	ug/L	1
Xylenes (total)	1330-20-7	8260B	ND		0.50	0.17	ug/L	1

Surrogate	Q	Run 1 % Recovery	Acceptance Limits
1,2-Dichloroethane-d4		102	70-130
Bromofluorobenzene		98	70-130
Toluene-d8		100	70-130

PQL = Practical quantitation limit
B = Detected in the method blank
E = Quantitation of compound exceeded the calibration range
ND = Not detected at or above the MDL
J = Estimated result < PQL and ≥ MDL
P = The RPD between two GC columns exceeds 40%
Where applicable, all soil sample analysis are reported on a dry weight basis unless flagged with a "W"
N = Recovery is out of criteria
H = Out of holding time

QC Summary

Volatile Organic Compounds by GC/MS - MB

Sample ID: LQ46375-001
Batch: 46375
Analytical Method: 8260B

Matrix: Aqueous
Prep Method: 5030B

Parameter	Result	Q	Dil	PQL	MDL	Units	Analysis Date
Acetone	ND		1	10	3.3	ug/L	11/11/2010 0330
Benzene	ND		1	0.50	0.027	ug/L	11/11/2010 0330
Bromodichloromethane	ND		1	0.50	0.17	ug/L	11/11/2010 0330
Bromoform	ND		1	0.50	0.010	ug/L	11/11/2010 0330
Bromomethane (Methyl bromide)	ND		1	0.50	0.20	ug/L	11/11/2010 0330
2-Butanone (MEK)	ND		1	10	2.0	ug/L	11/11/2010 0330
Carbon disulfide	ND		1	0.50	0.097	ug/L	11/11/2010 0330
Carbon tetrachloride	ND		1	0.50	0.085	ug/L	11/11/2010 0330
Chlorobenzene	ND		1	0.50	0.17	ug/L	11/11/2010 0330
Chloroethane	ND		1	0.50	0.17	ug/L	11/11/2010 0330
Chloroform	ND		1	0.50	0.17	ug/L	11/11/2010 0330
Chloromethane (Methyl chloride)	ND		1	0.50	0.17	ug/L	11/11/2010 0330
Cyclohexane	ND		1	0.50	0.30	ug/L	11/11/2010 0330
1,2-Dibromo-3-chloropropane (DBCP)	ND		1	0.50	0.069	ug/L	11/11/2010 0330
Dibromochloromethane	ND		1	0.50	0.17	ug/L	11/11/2010 0330
1,2-Dibromoethane (EDB)	ND		1	0.50	0.061	ug/L	11/11/2010 0330
1,4-Dichlorobenzene	ND		1	0.50	0.17	ug/L	11/11/2010 0330
1,2-Dichlorobenzene	ND		1	0.50	0.17	ug/L	11/11/2010 0330
1,3-Dichlorobenzene	ND		1	0.50	0.17	ug/L	11/11/2010 0330
Dichlorodifluoromethane	ND		1	0.50	0.071	ug/L	11/11/2010 0330
1,2-Dichloroethane	ND		1	0.50	0.023	ug/L	11/11/2010 0330
1,1-Dichloroethane	ND		1	0.50	0.054	ug/L	11/11/2010 0330
cis-1,2-Dichloroethene	ND		1	0.50	0.087	ug/L	11/11/2010 0330
trans-1,2-Dichloroethene	ND		1	0.50	0.079	ug/L	11/11/2010 0330
1,1-Dichloroethene	ND		1	0.50	0.094	ug/L	11/11/2010 0330
1,2-Dichloropropane	ND		1	0.50	0.081	ug/L	11/11/2010 0330
cis-1,3-Dichloropropene	ND		1	0.50	0.090	ug/L	11/11/2010 0330
trans-1,3-Dichloropropene	ND		1	0.50	0.18	ug/L	11/11/2010 0330
Ethylbenzene	ND		1	0.50	0.17	ug/L	11/11/2010 0330
2-Hexanone	ND		1	10	0.27	ug/L	11/11/2010 0330
Isopropylbenzene	ND		1	0.50	0.029	ug/L	11/11/2010 0330
Methyl acetate	ND		1	1.0	0.30	ug/L	11/11/2010 0330
Methyl tertiary butyl ether (MTBE)	ND		1	0.50	0.019	ug/L	11/11/2010 0330
4-Methyl-2-pentanone	ND		1	10	0.31	ug/L	11/11/2010 0330
Methylcyclohexane	ND		1	5.0	0.95	ug/L	11/11/2010 0330
Methylene chloride	ND		1	0.50	0.17	ug/L	11/11/2010 0330
Styrene	ND		1	0.50	0.015	ug/L	11/11/2010 0330
1,1,2,2-Tetrachloroethane	ND		1	0.50	0.013	ug/L	11/11/2010 0330
Tetrachloroethene	ND		1	0.50	0.014	ug/L	11/11/2010 0330
Toluene	0.48	J	1	0.50	0.17	ug/L	11/11/2010 0330
1,1,2-Trichloro-1,2,2-Trifluoroethane	ND		1	0.50	0.30	ug/L	11/11/2010 0330
1,2,4-Trichlorobenzene	ND		1	0.50	0.17	ug/L	11/11/2010 0330
1,1,1-Trichloroethane	ND		1	0.50	0.029	ug/L	11/11/2010 0330
1,1,2-Trichloroethane	ND		1	0.50	0.031	ug/L	11/11/2010 0330

PQL = Practical quantitation limit
ND = Not detected at or above the MDL
P = The RPD between two GC columns exceeds 40%
J = Estimated result < PQL and ≥ MDL
N - Recovery is out of criteria
+ - RPD is out of criteria

Where applicable, all soil sample analysis are reported on a dry weight basis unless flagged with a "W"

Note: Calculations are performed before rounding to avoid round-off errors in calculated results

Volatile Organic Compounds by GC/MS - MB

Sample ID: LQ46375-001
Batch: 46375
Analytical Method: 8260B

Matrix: Aqueous
Prep Method: 5030B

Parameter	Result	Q	Dil	PQL	MDL	Units	Analysis Date
Trichloroethene	ND		1	0.50	0.024	ug/L	11/11/2010 0330
Trichlorofluoromethane	ND		1	0.50	0.051	ug/L	11/11/2010 0330
Vinyl chloride	ND		1	0.50	0.065	ug/L	11/11/2010 0330
Xylenes (total)	ND		1	0.50	0.17	ug/L	11/11/2010 0330

Surrogate	Q	% Rec	Acceptance Limit
Bromofluorobenzene		93	70-130
1,2-Dichloroethane-d4		86	70-130
Toluene-d8		105	70-130

PQL = Practical quantitation limit
ND = Not detected at or above the MDL
P = The RPD between two GC columns exceeds 40%
J = Estimated result < PQL and ≥ MDL
N - Recovery is out of criteria
+ - RPD is out of criteria

Where applicable, all soil sample analysis are reported on a dry weight basis unless flagged with a "W"

Note: Calculations are performed before rounding to avoid round-off errors in calculated results

Volatile Organic Compounds by GC/MS - LCS

Sample ID: LQ46375-002
Batch: 46375
Analytical Method: 8260B

Matrix: Aqueous
Prep Method: 5030B

Parameter	Spike Amount (ug/L)	Result (ug/L)	Q	Dil	% Rec	% Rec Limit	Analysis Date
Acetone	100	82		1	82	46-153	11/11/2010 0156
Benzene	50	48		1	97	70-130	11/11/2010 0156
Bromodichloromethane	50	44		1	88	70-130	11/11/2010 0156
Bromoform	50	42		1	84	70-130	11/11/2010 0156
Bromomethane (Methyl bromide)	50	36		1	72	60-140	11/11/2010 0156
2-Butanone (MEK)	100	100		1	103	60-140	11/11/2010 0156
Carbon disulfide	50	42		1	84	60-140	11/11/2010 0156
Carbon tetrachloride	50	42		1	84	70-130	11/11/2010 0156
Chlorobenzene	50	47		1	94	70-130	11/11/2010 0156
Chloroethane	50	36		1	72	42-163	11/11/2010 0156
Chloroform	50	46		1	91	70-130	11/11/2010 0156
Chloromethane (Methyl chloride)	50	36		1	72	20-158	11/11/2010 0156
Cyclohexane	50	42		1	83	70-130	11/11/2010 0156
1,2-Dibromo-3-chloropropane (DBCP)	50	43		1	86	70-130	11/11/2010 0156
Dibromochloromethane	50	44		1	88	70-130	11/11/2010 0156
1,2-Dibromoethane (EDB)	50	48		1	96	70-130	11/11/2010 0156
1,4-Dichlorobenzene	50	48		1	97	70-130	11/11/2010 0156
1,2-Dichlorobenzene	50	51		1	101	70-130	11/11/2010 0156
1,3-Dichlorobenzene	50	49		1	99	70-130	11/11/2010 0156
Dichlorodifluoromethane	50	42		1	83	60-140	11/11/2010 0156
1,2-Dichloroethane	50	42		1	83	70-130	11/11/2010 0156
1,1-Dichloroethane	50	48		1	95	70-130	11/11/2010 0156
cis-1,2-Dichloroethene	50	52		1	104	70-130	11/11/2010 0156
trans-1,2-Dichloroethene	50	47		1	94	70-130	11/11/2010 0156
1,1-Dichloroethene	50	42		1	84	70-130	11/11/2010 0156
1,2-Dichloropropane	50	48		1	97	70-130	11/11/2010 0156
cis-1,3-Dichloropropene	50	47		1	94	70-130	11/11/2010 0156
trans-1,3-Dichloropropene	50	44		1	87	70-130	11/11/2010 0156
Ethylbenzene	50	49		1	98	70-130	11/11/2010 0156
2-Hexanone	100	91		1	91	60-140	11/11/2010 0156
Isopropylbenzene	50	54		1	107	70-130	11/11/2010 0156
Methyl acetate	50	41		1	83	15-128	11/11/2010 0156
Methyl tertiary butyl ether (MTBE)	50	45		1	91	70-130	11/11/2010 0156
4-Methyl-2-pentanone	100	96		1	96	60-140	11/11/2010 0156
Methylcyclohexane	50	50		1	99	70-130	11/11/2010 0156
Methylene chloride	50	42		1	83	70-130	11/11/2010 0156
Styrene	50	46		1	93	70-130	11/11/2010 0156
1,1,2,2-Tetrachloroethane	50	54		1	108	70-130	11/11/2010 0156
Tetrachloroethene	50	46		1	91	70-130	11/11/2010 0156
Toluene	50	50		1	101	70-130	11/11/2010 0156
1,1,2-Trichloro-1,2,2-Trifluoroethane	50	47		1	93	70-130	11/11/2010 0156
1,2,4-Trichlorobenzene	50	48		1	95	70-130	11/11/2010 0156
1,1,1-Trichloroethane	50	44		1	87	70-130	11/11/2010 0156
1,1,2-Trichloroethane	50	47		1	95	70-130	11/11/2010 0156

PQL = Practical quantitation limit
ND = Not detected at or above the MDL
P = The RPD between two GC columns exceeds 40%
J = Estimated result < PQL and ≥ MDL
N - Recovery is out of criteria
+ - RPD is out of criteria

Where applicable, all soil sample analysis are reported on a dry weight basis unless flagged with a "W"

Note: Calculations are performed before rounding to avoid round-off errors in calculated results

Volatile Organic Compounds by GC/MS - LCS

Sample ID: LQ46375-002
Batch: 46375
Analytical Method: 8260B

Matrix: Aqueous
Prep Method: 5030B

Parameter	Spike Amount (ug/L)	Result (ug/L)	Q	Dil	% Rec	% Rec Limit	Analysis Date
Trichloroethene	50	46		1	91	70-130	11/11/2010 0156
Trichlorofluoromethane	50	34		1	68	60-140	11/11/2010 0156
Vinyl chloride	50	36		1	72	60-140	11/11/2010 0156
Xylenes (total)	100	96		1	96	70-130	11/11/2010 0156

Surrogate	Q	% Rec	Acceptance Limit
Bromofluorobenzene		99	70-130
1,2-Dichloroethane-d4		80	70-130
Toluene-d8		112	70-130

PQL = Practical quantitation limit
ND = Not detected at or above the MDL
P = The RPD between two GC columns exceeds 40%
J = Estimated result < PQL and ≥ MDL
N - Recovery is out of criteria
+ - RPD is out of criteria

Where applicable, all soil sample analysis are reported on a dry weight basis unless flagged with a "W"

Note: Calculations are performed before rounding to avoid round-off errors in calculated results

Volatile Organic Compounds by GC/MS - LCSD

Sample ID: LQ46375-003
Batch: 46375
Analytical Method: 8260B

Matrix: Aqueous
Prep Method: 5030B

Parameter	Spike Amount (ug/L)	Result (ug/L)	Q	Dil	% Rec	% RPD	% Rec Limit	% RPD Limit	Analysis Date
Acetone	100	97		1	97	17	46-153	20	11/11/2010 0220
Benzene	50	45		1	90	7.0	70-130	20	11/11/2010 0220
Bromodichloromethane	50	42		1	84	5.3	70-130	20	11/11/2010 0220
Bromoform	50	40		1	81	4.2	70-130	20	11/11/2010 0220
Bromomethane (Methyl bromide)	50	34		1	68	5.4	60-140	20	11/11/2010 0220
2-Butanone (MEK)	100	100		1	100	3.3	60-140	20	11/11/2010 0220
Carbon disulfide	50	49		1	97	14	60-140	20	11/11/2010 0220
Carbon tetrachloride	50	40		1	81	3.9	70-130	20	11/11/2010 0220
Chlorobenzene	50	46		1	92	2.1	70-130	20	11/11/2010 0220
Chloroethane	50	37		1	74	2.1	42-163	20	11/11/2010 0220
Chloroform	50	45		1	90	1.7	70-130	20	11/11/2010 0220
Chloromethane (Methyl chloride)	50	36		1	71	0.82	20-158	20	11/11/2010 0220
Cyclohexane	50	42		1	83	0.18	70-130	20	11/11/2010 0220
1,2-Dibromo-3-chloropropane (DBCP)	50	42		1	84	2.8	70-130	20	11/11/2010 0220
Dibromochloromethane	50	43		1	86	2.5	70-130	20	11/11/2010 0220
1,2-Dibromoethane (EDB)	50	47		1	95	0.96	70-130	20	11/11/2010 0220
1,4-Dichlorobenzene	50	47		1	94	3.1	70-130	20	11/11/2010 0220
1,2-Dichlorobenzene	50	48		1	96	5.5	70-130	20	11/11/2010 0220
1,3-Dichlorobenzene	50	49		1	98	0.51	70-130	20	11/11/2010 0220
Dichlorodifluoromethane	50	40		1	79	4.9	60-140	20	11/11/2010 0220
1,2-Dichloroethane	50	40		1	80	4.3	70-130	20	11/11/2010 0220
1,1-Dichloroethane	50	46		1	93	2.9	70-130	20	11/11/2010 0220
cis-1,2-Dichloroethene	50	50		1	100	3.9	70-130	20	11/11/2010 0220
trans-1,2-Dichloroethene	50	49		1	99	4.6	70-130	20	11/11/2010 0220
1,1-Dichloroethene	50	48		1	96	13	70-130	20	11/11/2010 0220
1,2-Dichloropropane	50	40		1	79	20	70-130	20	11/11/2010 0220
cis-1,3-Dichloropropene	50	45		1	90	4.5	70-130	20	11/11/2010 0220
trans-1,3-Dichloropropene	50	43		1	86	1.4	70-130	20	11/11/2010 0220
Ethylbenzene	50	47		1	93	4.7	70-130	20	11/11/2010 0220
2-Hexanone	100	92		1	92	1.3	60-140	20	11/11/2010 0220
Isopropylbenzene	50	49		1	98	8.4	70-130	20	11/11/2010 0220
Methyl acetate	50	48		1	96	14	15-128	20	11/11/2010 0220
Methyl tertiary butyl ether (MTBE)	50	47		1	95	4.7	70-130	20	11/11/2010 0220
4-Methyl-2-pentanone	100	95		1	95	0.057	60-140	20	11/11/2010 0220
Methylcyclohexane	50	44		1	88	13	70-130	20	11/11/2010 0220
Methylene chloride	50	47		1	94	12	70-130	20	11/11/2010 0220
Styrene	50	45		1	89	4.0	70-130	20	11/11/2010 0220
1,1,2,2-Tetrachloroethane	50	51		1	103	5.5	70-130	20	11/11/2010 0220
Tetrachloroethene	50	44		1	87	4.3	70-130	20	11/11/2010 0220
Toluene	50	49		1	98	2.5	70-130	20	11/11/2010 0220
1,1,2-Trichloro-1,2,2-Trifluoroethane	50	53		1	106	13	70-130	20	11/11/2010 0220
1,2,4-Trichlorobenzene	50	44		1	88	8.4	70-130	20	11/11/2010 0220
1,1,1-Trichloroethane	50	42		1	83	4.9	70-130	20	11/11/2010 0220
1,1,2-Trichloroethane	50	47		1	94	0.81	70-130	20	11/11/2010 0220

PQL = Practical quantitation limit
ND = Not detected at or above the MDL
P = The RPD between two GC columns exceeds 40%
J = Estimated result < PQL and ≥ MDL
N - Recovery is out of criteria
+ - RPD is out of criteria

Where applicable, all soil sample analysis are reported on a dry weight basis unless flagged with a "W"

Note: Calculations are performed before rounding to avoid round-off errors in calculated results

Volatile Organic Compounds by GC/MS - LCSD

Sample ID: LQ46375-003
Batch: 46375
Analytical Method: 8260B

Matrix: Aqueous
Prep Method: 5030B

Parameter	Spike Amount (ug/L)	Result (ug/L)	Q	Dil	% Rec	% RPD	% Rec Limit	% RPD Limit	Analysis Date
Trichloroethene	50	43		1	87	4.6	70-130	20	11/11/2010 0220
Trichlorofluoromethane	50	36		1	71	4.6	60-140	20	11/11/2010 0220
Vinyl chloride	50	34		1	69	5.2	60-140	20	11/11/2010 0220
Xylenes (total)	100	92		1	92	4.4	70-130	20	11/11/2010 0220

Surrogate	Q	% Rec	Acceptance Limit
Bromofluorobenzene		97	70-130
1,2-Dichloroethane-d4		79	70-130
Toluene-d8		109	70-130

PQL = Practical quantitation limit
ND = Not detected at or above the MDL
P = The RPD between two GC columns exceeds 40%
J = Estimated result < PQL and ≥ MDL
N - Recovery is out of criteria
+ - RPD is out of criteria

Where applicable, all soil sample analysis are reported on a dry weight basis unless flagged with a "W"

Note: Calculations are performed before rounding to avoid round-off errors in calculated results

Volatile Organic Compounds by GC/MS - MB

Sample ID: LQ46459-001
Batch: 46459
Analytical Method: 8260B

Matrix: Aqueous
Prep Method: 5030B

Parameter	Result	Q	Dil	PQL	MDL	Units	Analysis Date
Acetone	ND		1	10	3.3	ug/L	11/12/2010 0232
Benzene	ND		1	0.50	0.027	ug/L	11/12/2010 0232
Bromodichloromethane	ND		1	0.50	0.17	ug/L	11/12/2010 0232
Bromoform	ND		1	0.50	0.010	ug/L	11/12/2010 0232
Bromomethane (Methyl bromide)	ND		1	0.50	0.20	ug/L	11/12/2010 0232
2-Butanone (MEK)	ND		1	10	2.0	ug/L	11/12/2010 0232
Carbon disulfide	ND		1	0.50	0.097	ug/L	11/12/2010 0232
Carbon tetrachloride	ND		1	0.50	0.085	ug/L	11/12/2010 0232
Chlorobenzene	ND		1	0.50	0.17	ug/L	11/12/2010 0232
Chloroethane	ND		1	0.50	0.17	ug/L	11/12/2010 0232
Chloroform	ND		1	0.50	0.17	ug/L	11/12/2010 0232
Chloromethane (Methyl chloride)	ND		1	0.50	0.17	ug/L	11/12/2010 0232
Cyclohexane	ND		1	0.50	0.30	ug/L	11/12/2010 0232
1,2-Dibromo-3-chloropropane (DBCP)	ND		1	0.50	0.069	ug/L	11/12/2010 0232
Dibromochloromethane	ND		1	0.50	0.17	ug/L	11/12/2010 0232
1,2-Dibromoethane (EDB)	ND		1	0.50	0.061	ug/L	11/12/2010 0232
1,4-Dichlorobenzene	ND		1	0.50	0.17	ug/L	11/12/2010 0232
1,3-Dichlorobenzene	ND		1	0.50	0.17	ug/L	11/12/2010 0232
1,2-Dichlorobenzene	ND		1	0.50	0.17	ug/L	11/12/2010 0232
Dichlorodifluoromethane	ND		1	0.50	0.071	ug/L	11/12/2010 0232
1,2-Dichloroethane	ND		1	0.50	0.023	ug/L	11/12/2010 0232
1,1-Dichloroethane	ND		1	0.50	0.054	ug/L	11/12/2010 0232
trans-1,2-Dichloroethene	ND		1	0.50	0.079	ug/L	11/12/2010 0232
cis-1,2-Dichloroethene	ND		1	0.50	0.087	ug/L	11/12/2010 0232
1,1-Dichloroethene	ND		1	0.50	0.094	ug/L	11/12/2010 0232
1,2-Dichloropropane	ND		1	0.50	0.081	ug/L	11/12/2010 0232
trans-1,3-Dichloropropene	ND		1	0.50	0.18	ug/L	11/12/2010 0232
cis-1,3-Dichloropropene	ND		1	0.50	0.090	ug/L	11/12/2010 0232
Ethylbenzene	ND		1	0.50	0.17	ug/L	11/12/2010 0232
2-Hexanone	ND		1	10	0.27	ug/L	11/12/2010 0232
Isopropylbenzene	ND		1	0.50	0.029	ug/L	11/12/2010 0232
Methyl acetate	ND		1	1.0	0.30	ug/L	11/12/2010 0232
Methyl tertiary butyl ether (MTBE)	ND		1	0.50	0.019	ug/L	11/12/2010 0232
4-Methyl-2-pentanone	ND		1	10	0.31	ug/L	11/12/2010 0232
Methylcyclohexane	ND		1	5.0	0.95	ug/L	11/12/2010 0232
Methylene chloride	ND		1	0.50	0.17	ug/L	11/12/2010 0232
Styrene	ND		1	0.50	0.015	ug/L	11/12/2010 0232
1,1,2,2-Tetrachloroethane	ND		1	0.50	0.013	ug/L	11/12/2010 0232
Tetrachloroethene	ND		1	0.50	0.014	ug/L	11/12/2010 0232
Toluene	ND		1	0.50	0.17	ug/L	11/12/2010 0232
1,1,2-Trichloro-1,2,2-Trifluoroethane	ND		1	0.50	0.30	ug/L	11/12/2010 0232
1,2,4-Trichlorobenzene	ND		1	0.50	0.17	ug/L	11/12/2010 0232
1,1,1-Trichloroethane	ND		1	0.50	0.029	ug/L	11/12/2010 0232
1,1,2-Trichloroethane	ND		1	0.50	0.031	ug/L	11/12/2010 0232

PQL = Practical quantitation limit
ND = Not detected at or above the MDL
P = The RPD between two GC columns exceeds 40%
J = Estimated result < PQL and ≥ MDL
N - Recovery is out of criteria
+ - RPD is out of criteria

Where applicable, all soil sample analysis are reported on a dry weight basis unless flagged with a "W"

Note: Calculations are performed before rounding to avoid round-off errors in calculated results

Volatile Organic Compounds by GC/MS - MB

Sample ID: LQ46459-001
Batch: 46459
Analytical Method: 8260B

Matrix: Aqueous
Prep Method: 5030B

Parameter	Result	Q	Dil	PQL	MDL	Units	Analysis Date
Trichloroethene	ND		1	0.50	0.024	ug/L	11/12/2010 0232
Trichlorofluoromethane	ND		1	0.50	0.051	ug/L	11/12/2010 0232
Vinyl chloride	ND		1	0.50	0.065	ug/L	11/12/2010 0232
Xylenes (total)	ND		1	0.50	0.17	ug/L	11/12/2010 0232

Surrogate	Q	% Rec	Acceptance Limit
Bromofluorobenzene		100	70-130
1,2-Dichloroethane-d4		98	70-130
Toluene-d8		102	70-130

PQL = Practical quantitation limit
ND = Not detected at or above the MDL
P = The RPD between two GC columns exceeds 40%
J = Estimated result < PQL and ≥ MDL
N - Recovery is out of criteria
+ - RPD is out of criteria

Where applicable, all soil sample analysis are reported on a dry weight basis unless flagged with a "W"

Note: Calculations are performed before rounding to avoid round-off errors in calculated results

Volatile Organic Compounds by GC/MS - LCS

Sample ID: LQ46459-002
Batch: 46459
Analytical Method: 8260B

Matrix: Aqueous
Prep Method: 5030B

Parameter	Spike Amount (ug/L)	Result (ug/L)	Q	Dil	% Rec	% Rec Limit	Analysis Date
Acetone	100	130		1	131	46-153	11/12/2010 0106
Benzene	50	52		1	105	70-130	11/12/2010 0106
Bromodichloromethane	50	55		1	110	70-130	11/12/2010 0106
Bromoform	50	50		1	100	70-130	11/12/2010 0106
Bromomethane (Methyl bromide)	50	48		1	96	60-140	11/12/2010 0106
2-Butanone (MEK)	100	130		1	134	60-140	11/12/2010 0106
Carbon disulfide	50	50		1	101	60-140	11/12/2010 0106
Carbon tetrachloride	50	54		1	108	70-130	11/12/2010 0106
Chlorobenzene	50	53		1	107	70-130	11/12/2010 0106
Chloroethane	50	56		1	112	42-163	11/12/2010 0106
Chloroform	50	53		1	105	70-130	11/12/2010 0106
Chloromethane (Methyl chloride)	50	56		1	112	20-158	11/12/2010 0106
Cyclohexane	50	50		1	100	70-130	11/12/2010 0106
1,2-Dibromo-3-chloropropane (DBCP)	50	55		1	111	70-130	11/12/2010 0106
Dibromochloromethane	50	50		1	100	70-130	11/12/2010 0106
1,2-Dibromoethane (EDB)	50	59		1	118	70-130	11/12/2010 0106
1,4-Dichlorobenzene	50	53		1	105	70-130	11/12/2010 0106
1,3-Dichlorobenzene	50	53		1	105	70-130	11/12/2010 0106
1,2-Dichlorobenzene	50	55		1	110	70-130	11/12/2010 0106
Dichlorodifluoromethane	50	62		1	124	60-140	11/12/2010 0106
1,2-Dichloroethane	50	52		1	105	70-130	11/12/2010 0106
1,1-Dichloroethane	50	52		1	103	70-130	11/12/2010 0106
trans-1,2-Dichloroethene	50	52		1	104	70-130	11/12/2010 0106
cis-1,2-Dichloroethene	50	52		1	105	70-130	11/12/2010 0106
1,1-Dichloroethene	50	52		1	104	70-130	11/12/2010 0106
1,2-Dichloropropane	50	52		1	104	70-130	11/12/2010 0106
trans-1,3-Dichloropropene	50	57		1	114	70-130	11/12/2010 0106
cis-1,3-Dichloropropene	50	55		1	111	70-130	11/12/2010 0106
Ethylbenzene	50	55		1	110	70-130	11/12/2010 0106
2-Hexanone	100	130		1	135	60-140	11/12/2010 0106
Isopropylbenzene	50	56		1	112	70-130	11/12/2010 0106
Methyl acetate	50	64		1	128	15-128	11/12/2010 0106
Methyl tertiary butyl ether (MTBE)	50	56		1	112	70-130	11/12/2010 0106
4-Methyl-2-pentanone	100	130		1	131	60-140	11/12/2010 0106
Methylcyclohexane	50	54		1	107	70-130	11/12/2010 0106
Methylene chloride	50	50		1	100	70-130	11/12/2010 0106
Styrene	50	54		1	108	70-130	11/12/2010 0106
1,1,2,2-Tetrachloroethane	50	60		1	119	70-130	11/12/2010 0106
Tetrachloroethene	50	54		1	108	70-130	11/12/2010 0106
Toluene	50	54		1	108	70-130	11/12/2010 0106
1,1,2-Trichloro-1,2,2-Trifluoroethane	50	56		1	112	70-130	11/12/2010 0106
1,2,4-Trichlorobenzene	50	53		1	107	70-130	11/12/2010 0106
1,1,1-Trichloroethane	50	52		1	103	70-130	11/12/2010 0106
1,1,2-Trichloroethane	50	54		1	109	70-130	11/12/2010 0106

PQL = Practical quantitation limit
ND = Not detected at or above the MDL
P = The RPD between two GC columns exceeds 40%
J = Estimated result < PQL and ≥ MDL
N - Recovery is out of criteria
+ - RPD is out of criteria

Where applicable, all soil sample analysis are reported on a dry weight basis unless flagged with a "W"

Note: Calculations are performed before rounding to avoid round-off errors in calculated results

Volatile Organic Compounds by GC/MS - LCS

Sample ID: LQ46459-002
Batch: 46459
Analytical Method: 8260B

Matrix: Aqueous
Prep Method: 5030B

Parameter	Spike Amount (ug/L)	Result (ug/L)	Q	Dil	% Rec	% Rec Limit	Analysis Date
Trichloroethene	50	53		1	105	70-130	11/12/2010 0106
Trichlorofluoromethane	50	55		1	109	60-140	11/12/2010 0106
Vinyl chloride	50	53		1	106	60-140	11/12/2010 0106
Xylenes (total)	100	110		1	112	70-130	11/12/2010 0106

Surrogate	Q	% Rec	Acceptance Limit
Bromofluorobenzene		103	70-130
1,2-Dichloroethane-d4		96	70-130
Toluene-d8		105	70-130

PQL = Practical quantitation limit
ND = Not detected at or above the MDL
P = The RPD between two GC columns exceeds 40%
J = Estimated result < PQL and ≥ MDL
N - Recovery is out of criteria
+ - RPD is out of criteria

Where applicable, all soil sample analysis are reported on a dry weight basis unless flagged with a "W"

Note: Calculations are performed before rounding to avoid round-off errors in calculated results

Volatile Organic Compounds by GC/MS - LCSD

Sample ID: LQ46459-003
Batch: 46459
Analytical Method: 8260B

Matrix: Aqueous
Prep Method: 5030B

Parameter	Spike Amount (ug/L)	Result (ug/L)	Q	Dil	% Rec	% RPD	% Rec Limit	% RPD Limit	Analysis Date
Acetone	100	130		1	134	2.1	46-153	20	11/12/2010 0128
Benzene	50	53		1	106	1.2	70-130	20	11/12/2010 0128
Bromodichloromethane	50	56		1	112	2.3	70-130	20	11/12/2010 0128
Bromoform	50	51		1	102	2.3	70-130	20	11/12/2010 0128
Bromomethane (Methyl bromide)	50	56		1	113	16	60-140	20	11/12/2010 0128
2-Butanone (MEK)	100	130		1	134	0.54	60-140	20	11/12/2010 0128
Carbon disulfide	50	51		1	102	1.2	60-140	20	11/12/2010 0128
Carbon tetrachloride	50	55		1	110	2.1	70-130	20	11/12/2010 0128
Chlorobenzene	50	54		1	108	1.2	70-130	20	11/12/2010 0128
Chloroethane	50	55		1	109	2.2	42-163	20	11/12/2010 0128
Chloroform	50	53		1	107	1.6	70-130	20	11/12/2010 0128
Chloromethane (Methyl chloride)	50	53		1	106	5.2	20-158	20	11/12/2010 0128
Cyclohexane	50	50		1	100	0.23	70-130	20	11/12/2010 0128
1,2-Dibromo-3-chloropropane (DBCP)	50	55		1	110	0.96	70-130	20	11/12/2010 0128
Dibromochloromethane	50	51		1	102	2.1	70-130	20	11/12/2010 0128
1,2-Dibromoethane (EDB)	50	59		1	118	0.37	70-130	20	11/12/2010 0128
1,4-Dichlorobenzene	50	53		1	106	0.51	70-130	20	11/12/2010 0128
1,3-Dichlorobenzene	50	54		1	107	2.0	70-130	20	11/12/2010 0128
1,2-Dichlorobenzene	50	55		1	110	0.57	70-130	20	11/12/2010 0128
Dichlorodifluoromethane	50	60		1	120	3.4	60-140	20	11/12/2010 0128
1,2-Dichloroethane	50	52		1	105	0.20	70-130	20	11/12/2010 0128
1,1-Dichloroethane	50	50		1	101	2.0	70-130	20	11/12/2010 0128
trans-1,2-Dichloroethene	50	53		1	106	2.1	70-130	20	11/12/2010 0128
cis-1,2-Dichloroethene	50	53		1	106	1.4	70-130	20	11/12/2010 0128
1,1-Dichloroethene	50	52		1	104	0.19	70-130	20	11/12/2010 0128
1,2-Dichloropropane	50	52		1	104	0.56	70-130	20	11/12/2010 0128
trans-1,3-Dichloropropene	50	58		1	116	1.1	70-130	20	11/12/2010 0128
cis-1,3-Dichloropropene	50	55		1	110	0.67	70-130	20	11/12/2010 0128
Ethylbenzene	50	57		1	114	3.3	70-130	20	11/12/2010 0128
2-Hexanone	100	130		1	135	0.076	60-140	20	11/12/2010 0128
Isopropylbenzene	50	58		1	117	3.8	70-130	20	11/12/2010 0128
Methyl acetate	50	62		1	125	2.7	15-128	20	11/12/2010 0128
Methyl tertiary butyl ether (MTBE)	50	55		1	109	2.0	70-130	20	11/12/2010 0128
4-Methyl-2-pentanone	100	130		1	130	0.24	60-140	20	11/12/2010 0128
Methylcyclohexane	50	55		1	111	3.2	70-130	20	11/12/2010 0128
Methylene chloride	50	50		1	100	0.19	70-130	20	11/12/2010 0128
Styrene	50	54		1	109	0.66	70-130	20	11/12/2010 0128
1,1,2,2-Tetrachloroethane	50	60		1	120	1.2	70-130	20	11/12/2010 0128
Tetrachloroethene	50	56		1	113	3.9	70-130	20	11/12/2010 0128
Toluene	50	55		1	110	2.3	70-130	20	11/12/2010 0128
1,1,2-Trichloro-1,2,2-Trifluoroethane	50	56		1	113	0.37	70-130	20	11/12/2010 0128
1,2,4-Trichlorobenzene	50	54		1	108	1.5	70-130	20	11/12/2010 0128
1,1,1-Trichloroethane	50	53		1	106	2.9	70-130	20	11/12/2010 0128
1,1,2-Trichloroethane	50	55		1	111	2.1	70-130	20	11/12/2010 0128

PQL = Practical quantitation limit
ND = Not detected at or above the MDL
P = The RPD between two GC columns exceeds 40%
J = Estimated result < PQL and ≥ MDL
N - Recovery is out of criteria
+ - RPD is out of criteria

Where applicable, all soil sample analysis are reported on a dry weight basis unless flagged with a "W"

Note: Calculations are performed before rounding to avoid round-off errors in calculated results

Volatile Organic Compounds by GC/MS - LCSD

Sample ID: LQ46459-003
Batch: 46459
Analytical Method: 8260B

Matrix: Aqueous
Prep Method: 5030B

Parameter	Spike Amount (ug/L)	Result (ug/L)	Q	Dil	% Rec	% RPD	% Rec Limit	% RPD Limit	Analysis Date
Trichloroethene	50	54		1	108	2.8	70-130	20	11/12/2010 0128
Trichlorofluoromethane	50	55		1	110	1.1	60-140	20	11/12/2010 0128
Vinyl chloride	50	46		1	93	13	60-140	20	11/12/2010 0128
Xylenes (total)	100	120		1	115	3.1	70-130	20	11/12/2010 0128

Surrogate	Q	% Rec	Acceptance Limit
Bromofluorobenzene		102	70-130
1,2-Dichloroethane-d4		95	70-130
Toluene-d8		104	70-130

PQL = Practical quantitation limit
ND = Not detected at or above the MDL
P = The RPD between two GC columns exceeds 40%
J = Estimated result < PQL and ≥ MDL
N - Recovery is out of criteria
+ - RPD is out of criteria

Where applicable, all soil sample analysis are reported on a dry weight basis unless flagged with a "W"

Note: Calculations are performed before rounding to avoid round-off errors in calculated results

[redacted]

ENTAL SERVICES, INC.
ge Point Drive
South Carolina 29172
9700 Fax No. (803) 791-9111

Number 107609

ONS	Telephone No. / Fax No. / E-mail shelley.gibbons@arcadis-us.com 919-954-1282/919-954-5448	Quote No.
ton	Waybill No. FED-EX 8730 0304 5013	Page ___ of ___
WSON	Analysis (Attach list if more space is needed.)	

. of Containers / Preservative Type						8260 BVOC									Lot No. LK06009 Remarks / Cooler I.D.
HNO3	HCl	NaOH	5035 KI												
	3					X									
	3					X									
	3					X									
	3					X									
	3					X									
	3					X									

Note: All samples are retained for six weeks from receipt unless other arrangements are made.

Disposal by Lab

C Requirements (Specify)

Received by	Date	Time
Received by	Date	Time
Laboratory received by [signature]	Date 11/6/10	Time 0915
AB USE ONLY eceived on Ice (Circle) Yes No Ice Pack	Receipt Temp. 2.9 °C	

Document Number: F-AD-012 Effective Date: 08-04-02

Shealy Environmental Services, Inc.
Document Number: F-AD-016
Revision Number: 6

Page 1 of 1
Replaces Date: 09/22/06
Effective Date: 05/29/07

Sample Receipt Checklist (SRC)

Client: Arcadis Cooler Inspected by/date: [illegible] Lot #: CK06U09

Means of receipt: ☐ SESI ☐ Client ☐ UPS ☑ FedEx ☐ Airborne Exp ☐ Other

Yes ☐	No ☑	NA ☐	1. Were custody seals present on the cooler?
Yes ☐	No ☐	NA ☑	2. If custody seals were present, were they intact and unbroken?

Cooler ID/temperature upon receipt 2.9 °C ___/___ °C ___/___ °C ___/___ °C
___/___ °C ___/___ °C ___/___ °C ___/___ °C

Method: ☐ Temperature Blank ☑ Against Bottles
Method of coolant: ☑ Wet Ice ☐ Blue Ice ☐ Dry Ice ☐ None

If response is No (or Yes for 14, 15, 16), an explanation/resolution must be provided.

Yes ☐	No ☐	NA ☑ [illegible]	3. If temperature of any cooler exceeded 6.0°C, was Project Manager notified? PM notified by SRC, phone, note (circle one), other:_____. (For coolers received via commercial courier, PMs are to be notified immediately.
Yes ☑	No ☐	NA ☑	4. Is the commercial courier's packing slip attached to this form?
Yes ☐	No ☑	NA ☐	5. Were proper custody procedures (relinquished/received) followed?
Yes ☑	No ☐	NA ☐	6. Were sample IDs listed?
Yes ☑	No ☐	NA ☐	7. Was collection date & time listed?
Yes ☑	No ☐	NA ☐	8. Were tests to be performed listed on the COC or was quote # provided?
Yes ☑	No ☐	NA ☐	9. Did all samples arrive in the proper containers for each test?
Yes ☑	No ☐	NA ☐	10. Did all container label information (ID, date, time) agree with COC?
Yes ☑	No ☐	NA ☐	11. Did all containers arrive in good condition (unbroken, lids on, etc.)?
Yes ☑	No ☐	NA ☐	12. Was adequate sample volume available?
Yes ☑	No ☐	NA ☐	13. Were all samples received within ½ the holding time or 48 hours, whichever comes first?
Yes ☑	No ☐	NA ☐	14. Were any samples containers missing? ~ 0 of 6 Recieved 2 not 3 Temp Blank
Yes ☐	No ☑	NA ☐	15. Were there any excess samples not listed on COC?
Yes ☑	No ☐	NA ☐	16. Were bubbles present >"pea-size" (¼"or 6mm in diameter) in any VOA vials?
Yes ☐	No ☐	NA ☑	17. Were all metals/O&G/HEM/nutrient samples received at a pH of <2?
Yes ☐	No ☐	NA ☑	18. Were all cyanide and/or sulfide samples received at a pH >12?
Yes ☐	No ☐	NA ☑	19. Were all applicable NH3/TKN/cyanide/phenol/BNA/pest/PCB/herb

[redacted]

Report of Analysis

ARCADIS U.S., Inc.
30 Patewood Drive
Suite 155
Greenville, SC 29615
Attention: Allison Fang

Project Name: Hunter Stewart FST-39

Project Number: GP08HAFS.F39A.DG0FI

Lot Number: LK05005

Date Completed: 11/12/2010

Nisreen Saikaly
Project Manager

This report shall not be reproduced, except in its entirety, without the written approval of Shealy Environmental Services, Inc.

The following non-paginated documents are considered part of this report: Chain of Custody Record and Sample Receipt Checklist.

* L K 0 5 0 0 5 *

Case Narrative
ARCADIS U.S., Inc.
Lot Number: LK05005

This Report of Analysis contains the analytical result(s) for the sample(s) listed on the Sample Summary following this Case Narrative. The sample receiving date is documented in the header information associated with each sample.

Sample receipt, sample analysis, and data review have been performed in accordance with the most current approved NELAC standards, the Shealy Environmental Services, Inc. ("Shealy") Quality Assurance Management Plan (QAMP), standard operating procedures (SOPs), and Shealy policies. Any exceptions to the NELAC standards, the QAMP, SOPs or policies are qualified on the results page or discussed below.

If you have any questions regarding this report please contact the Shealy Project Manager listed on the cover page.

Volatile Organic Compounds

The LCS recovery for Methyl acetate exceeded method control limits in batch 45932; however, all other QA/QC criteria for the LCS/LCSD were within acceptance criteria and method control limits. The associated sample results were non-detect, therefore the results were reported and no corrective action was required.

Sample Summary

ARCADIS U.S., Inc.

Lot Number: LK05005

Sample Number	Sample ID	Matrix	Date Sampled	Date Received
001	D-30 (30-34')	Aqueous	11/03/2010 1710	11/05/2010
002	D-30 (36-40')	Aqueous	11/03/2010 1740	11/05/2010
003	D-30 (42-46')	Aqueous	11/03/2010 1819	11/05/2010
004	C-14 (30-34')	Aqueous	11/04/2010 0856	11/05/2010
005	C-14 (36-40')	Aqueous	11/04/2010 0929	11/05/2010
006	C-14 (42-46')	Aqueous	11/04/2010 1000	11/05/2010
007	D-23 (30-34')	Aqueous	11/04/2010 1143	11/05/2010
008	D-23 (36-40')	Aqueous	11/04/2010 1223	11/05/2010
009	D-23 (42-46')	Aqueous	11/04/2010 1307	11/05/2010
010	Trip Blank	Aqueous	11/05/2010 0900	11/05/2010

(10 samples)

Executive Summary
ARCADIS U.S., Inc.
Lot Number: LK05005

Sample	Sample ID	Matrix	Parameter	Method	Result	Q	Units	Page
001	D-30 (30-34')	Aqueous	Carbon disulfide	8260B	0.44	J	ug/L	6
001	D-30 (30-34')	Aqueous	1,1-Dichloroethane	8260B	0.12	J	ug/L	6
001	D-30 (30-34')	Aqueous	trans-1,2-Dichloroethene	8260B	1.5		ug/L	6
001	D-30 (30-34')	Aqueous	1,1-Dichloroethene	8260B	0.25	J	ug/L	6
001	D-30 (30-34')	Aqueous	cis-1,2-Dichloroethene	8260B	20		ug/L	6
001	D-30 (30-34')	Aqueous	Tetrachloroethene	8260B	0.23	J	ug/L	6
001	D-30 (30-34')	Aqueous	Trichloroethene	8260B	13		ug/L	7
001	D-30 (30-34')	Aqueous	Xylenes (total)	8260B	0.17	J	ug/L	7
002	D-30 (36-40')	Aqueous	Acetone	8260B	8.3	J	ug/L	8
002	D-30 (36-40')	Aqueous	Benzene	8260B	0.58		ug/L	8
002	D-30 (36-40')	Aqueous	2-Butanone (MEK)	8260B	2.2	J	ug/L	8
002	D-30 (36-40')	Aqueous	1,1-Dichloroethane	8260B	25		ug/L	8
002	D-30 (36-40')	Aqueous	trans-1,2-Dichloroethene	8260B	0.11	J	ug/L	8
002	D-30 (36-40')	Aqueous	1,1-Dichloroethene	8260B	40		ug/L	8
002	D-30 (36-40')	Aqueous	cis-1,2-Dichloroethene	8260B	4.1		ug/L	8
002	D-30 (36-40')	Aqueous	Tetrachloroethene	8260B	0.79		ug/L	8
002	D-30 (36-40')	Aqueous	Toluene	8260B	1.0		ug/L	8
002	D-30 (36-40')	Aqueous	Trichloroethene	8260B	8.8		ug/L	9
002	D-30 (36-40')	Aqueous	Xylenes (total)	8260B	0.22	J	ug/L	9
003	D-30 (42-46')	Aqueous	Acetone	8260B	30		ug/L	10
003	D-30 (42-46')	Aqueous	Benzene	8260B	1.1		ug/L	10
003	D-30 (42-46')	Aqueous	Chloromethane (Methyl chloride)	8260B	4.1		ug/L	10
003	D-30 (42-46')	Aqueous	1,1-Dichloroethane	8260B	17		ug/L	10
003	D-30 (42-46')	Aqueous	1,1-Dichloroethene	8260B	8.3		ug/L	10
003	D-30 (42-46')	Aqueous	cis-1,2-Dichloroethene	8260B	1.2		ug/L	10
003	D-30 (42-46')	Aqueous	Toluene	8260B	1.1		ug/L	10
003	D-30 (42-46')	Aqueous	Trichloroethene	8260B	1.4		ug/L	11
004	C-14 (30-34')	Aqueous	Acetone	8260B	3.8	J	ug/L	12
004	C-14 (30-34')	Aqueous	Benzene	8260B	0.12	J	ug/L	12
004	C-14 (30-34')	Aqueous	Carbon disulfide	8260B	0.99		ug/L	12
004	C-14 (30-34')	Aqueous	Tetrachloroethene	8260B	1.7		ug/L	12
004	C-14 (30-34')	Aqueous	Trichloroethene	8260B	0.61		ug/L	13
005	C-14 (36-40')	Aqueous	Benzene	8260B	0.22	J	ug/L	14
005	C-14 (36-40')	Aqueous	Carbon disulfide	8260B	0.60	J	ug/L	14
005	C-14 (36-40')	Aqueous	Tetrachloroethene	8260B	0.65	J	ug/L	14
005	C-14 (36-40')	Aqueous	Toluene	8260B	0.43	J	ug/L	14
005	C-14 (36-40')	Aqueous	Trichloroethene	8260B	2.7		ug/L	15
006	C-14 (42-46')	Aqueous	Benzene	8260B	0.10	J	ug/L	16
006	C-14 (42-46')	Aqueous	Tetrachloroethene	8260B	0.13	J	ug/L	16
006	C-14 (42-46')	Aqueous	Toluene	8260B	0.18	J	ug/L	16
006	C-14 (42-46')	Aqueous	Trichloroethene	8260B	0.28	J	ug/L	17
007	D-23 (30-34')	Aqueous	Benzene	8260B	0.11	J	ug/L	18
007	D-23 (30-34')	Aqueous	Carbon disulfide	8260B	0.52		ug/L	18
007	D-23 (30-34')	Aqueous	trans-1,2-Dichloroethene	8260B	0.23	J	ug/L	18
007	D-23 (30-34')	Aqueous	1,1-Dichloroethene	8260B	0.11	J	ug/L	18

Executive Summary (Continued)

Lot Number: LK05005

Sample	Sample ID	Matrix	Parameter	Method	Result	Q	Units	Page
007	D-23 (30-34')	Aqueous	cis-1,2-Dichloroethene	8260B	2.1		ug/L	18
007	D-23 (30-34')	Aqueous	Tetrachloroethene	8260B	0.16	J	ug/L	18
007	D-23 (30-34')	Aqueous	Toluene	8260B	0.22	J	ug/L	18
007	D-23 (30-34')	Aqueous	Trichloroethene	8260B	7.3		ug/L	19
008	D-23 (36-40')	Aqueous	Acetone	8260B	4.1	J	ug/L	20
008	D-23 (36-40')	Aqueous	Benzene	8260B	0.21	J	ug/L	20
008	D-23 (36-40')	Aqueous	2-Butanone (MEK)	8260B	2.9	J	ug/L	20
008	D-23 (36-40')	Aqueous	Carbon disulfide	8260B	0.70		ug/L	20
008	D-23 (36-40')	Aqueous	1,1-Dichloroethane	8260B	0.21	J	ug/L	20
008	D-23 (36-40')	Aqueous	trans-1,2-Dichloroethene	8260B	0.80		ug/L	20
008	D-23 (36-40')	Aqueous	1,1-Dichloroethene	8260B	0.22	J	ug/L	20
008	D-23 (36-40')	Aqueous	cis-1,2-Dichloroethene	8260B	15		ug/L	20
008	D-23 (36-40')	Aqueous	Tetrachloroethene	8260B	10		ug/L	20
008	D-23 (36-40')	Aqueous	Toluene	8260B	0.32	J	ug/L	20
008	D-23 (36-40')	Aqueous	Trichloroethene	8260B	68		ug/L	21
008	D-23 (36-40')	Aqueous	Xylenes (total)	8260B	0.17	J	ug/L	21
009	D-23 (42-46')	Aqueous	Acetone	8260B	5.9	J	ug/L	22
009	D-23 (42-46')	Aqueous	Benzene	8260B	0.24	J	ug/L	22
009	D-23 (42-46')	Aqueous	cis-1,2-Dichloroethene	8260B	6.3		ug/L	22
009	D-23 (42-46')	Aqueous	Tetrachloroethene	8260B	0.20	J	ug/L	22
009	D-23 (42-46')	Aqueous	Toluene	8260B	0.25	J	ug/L	22
009	D-23 (42-46')	Aqueous	Trichloroethene	8260B	6.4		ug/L	23
010	Trip Blank	Aqueous	Carbon disulfide	8260B	0.17	J	ug/L	24

(68 detections)

Volatile Organic Compounds by GC/MS

Client: ARCADIS U.S., Inc.
Laboratory ID: LK05005-001
Description: D-30 (30-34')
Matrix: Aqueous
Date Sampled: 11/03/2010 1710
Date Received: 11/05/2010

Run	Prep Method	Analytical Method	Dilution	Analysis Date	Analyst	Prep Date	Batch
1	5030B	8260B	1	11/06/2010 0122	DLB		46044

Parameter	CAS Number	Analytical Method	Result	Q	PQL	MDL	Units	Run
Acetone	67-64-1	8260B	ND		10	3.3	ug/L	1
Benzene	71-43-2	8260B	ND		0.50	0.027	ug/L	1
Bromodichloromethane	75-27-4	8260B	ND		0.50	0.17	ug/L	1
Bromoform	75-25-2	8260B	ND		0.50	0.010	ug/L	1
Bromomethane (Methyl bromide)	74-83-9	8260B	ND		0.50	0.20	ug/L	1
2-Butanone (MEK)	78-93-3	8260B	ND		10	2.0	ug/L	1
Carbon disulfide	75-15-0	8260B	0.44	J	0.50	0.097	ug/L	1
Carbon tetrachloride	56-23-5	8260B	ND		0.50	0.085	ug/L	1
Chlorobenzene	108-90-7	8260B	ND		0.50	0.17	ug/L	1
Chloroethane	75-00-3	8260B	ND		0.50	0.17	ug/L	1
Chloroform	67-66-3	8260B	ND		0.50	0.17	ug/L	1
Chloromethane (Methyl chloride)	74-87-3	8260B	ND		0.50	0.17	ug/L	1
Cyclohexane	110-82-7	8260B	ND		0.50	0.30	ug/L	1
1,2-Dibromo-3-chloropropane (DBCP)	96-12-8	8260B	ND		0.50	0.069	ug/L	1
Dibromochloromethane	124-48-1	8260B	ND		0.50	0.17	ug/L	1
1,2-Dibromoethane (EDB)	106-93-4	8260B	ND		0.50	0.061	ug/L	1
1,3-Dichlorobenzene	541-73-1	8260B	ND		0.50	0.17	ug/L	1
1,2-Dichlorobenzene	95-50-1	8260B	ND		0.50	0.17	ug/L	1
1,4-Dichlorobenzene	106-46-7	8260B	ND		0.50	0.17	ug/L	1
Dichlorodifluoromethane	75-71-8	8260B	ND		0.50	0.071	ug/L	1
1,1-Dichloroethane	75-34-3	8260B	0.12	J	0.50	0.054	ug/L	1
1,2-Dichloroethane	107-06-2	8260B	ND		0.50	0.023	ug/L	1
trans-1,2-Dichloroethene	156-60-5	8260B	1.5		0.50	0.079	ug/L	1
1,1-Dichloroethene	75-35-4	8260B	0.25	J	0.50	0.094	ug/L	1
cis-1,2-Dichloroethene	156-59-2	8260B	20		0.50	0.087	ug/L	1
1,2-Dichloropropane	78-87-5	8260B	ND		0.50	0.081	ug/L	1
trans-1,3-Dichloropropene	10061-02-6	8260B	ND		0.50	0.18	ug/L	1
cis-1,3-Dichloropropene	10061-01-5	8260B	ND		0.50	0.090	ug/L	1
Ethylbenzene	100-41-4	8260B	ND		0.50	0.17	ug/L	1
2-Hexanone	591-78-6	8260B	ND		10	0.27	ug/L	1
Isopropylbenzene	98-82-8	8260B	ND		0.50	0.029	ug/L	1
Methyl acetate	79-20-9	8260B	ND		1.0	0.30	ug/L	1
Methyl tertiary butyl ether (MTBE)	1634-04-4	8260B	ND		0.50	0.019	ug/L	1
4-Methyl-2-pentanone	108-10-1	8260B	ND		10	0.31	ug/L	1
Methylcyclohexane	108-87-2	8260B	ND		5.0	0.95	ug/L	1
Methylene chloride	75-09-2	8260B	ND		0.50	0.17	ug/L	1
Styrene	100-42-5	8260B	ND		0.50	0.015	ug/L	1
1,1,2,2-Tetrachloroethane	79-34-5	8260B	ND		0.50	0.013	ug/L	1
Tetrachloroethene	127-18-4	8260B	0.23	J	0.50	0.014	ug/L	1
Toluene	108-88-3	8260B	ND		0.50	0.17	ug/L	1
1,1,2-Trichloro-1,2,2-Trifluoroethane	76-13-1	8260B	ND		0.50	0.30	ug/L	1
1,2,4-Trichlorobenzene	120-82-1	8260B	ND		0.50	0.17	ug/L	1
1,1,1-Trichloroethane	71-55-6	8260B	ND		0.50	0.029	ug/L	1
1,1,2-Trichloroethane	79-00-5	8260B	ND		0.50	0.031	ug/L	1

PQL = Practical quantitation limit
B = Detected in the method blank
E = Quantitation of compound exceeded the calibration range
ND = Not detected at or above the MDL
J = Estimated result < PQL and ≥ MDL
P = The RPD between two GC columns exceeds 40%
Where applicable, all soil sample analysis are reported on a dry weight basis unless flagged with a "W"
N = Recovery is out of criteria
H = Out of holding time

Volatile Organic Compounds by GC/MS

Client: ARCADIS U.S., Inc.
Laboratory ID: LK05005-001
Description: D-30 (30-34')
Matrix: Aqueous
Date Sampled: 11/03/2010 1710
Date Received: 11/05/2010

Run	Prep Method	Analytical Method	Dilution	Analysis Date	Analyst	Prep Date	Batch
1	5030B	8260B	1	11/06/2010 0122	DLB		46044

Parameter	CAS Number	Analytical Method	Result	Q	PQL	MDL	Units	Run
Trichloroethene	79-01-6	8260B	13		0.50	0.024	ug/L	1
Trichlorofluoromethane	75-69-4	8260B	ND		0.50	0.051	ug/L	1
Vinyl chloride	75-01-4	8260B	ND		0.50	0.065	ug/L	1
Xylenes (total)	1330-20-7	8260B	0.17	J	0.50	0.17	ug/L	1

Surrogate	Q	Run 1 % Recovery	Acceptance Limits
1,2-Dichloroethane-d4		94	70-130
Bromofluorobenzene		102	70-130
Toluene-d8		119	70-130

PQL = Practical quantitation limit
B = Detected in the method blank
E = Quantitation of compound exceeded the calibration range
ND = Not detected at or above the MDL
J = Estimated result < PQL and ≥ MDL
P = The RPD between two GC columns exceeds 40%
Where applicable, all soil sample analysis are reported on a dry weight basis unless flagged with a "W"
N = Recovery is out of criteria
H = Out of holding time

Volatile Organic Compounds by GC/MS

Client: ARCADIS U.S., Inc.
Laboratory ID: LK05005-002
Description: D-30 (36-40')
Matrix: Aqueous
Date Sampled: 11/03/2010 1740
Date Received: 11/05/2010

Run	Prep Method	Analytical Method	Dilution	Analysis Date	Analyst	Prep Date	Batch
1	5030B	8260B	1	11/06/2010 0320	DLB		46044

Parameter	CAS Number	Analytical Method	Result	Q	PQL	MDL	Units	Run
Acetone	67-64-1	8260B	8.3	J	10	3.3	ug/L	1
Benzene	71-43-2	8260B	0.58		0.50	0.027	ug/L	1
Bromodichloromethane	75-27-4	8260B	ND		0.50	0.17	ug/L	1
Bromoform	75-25-2	8260B	ND		0.50	0.010	ug/L	1
Bromomethane (Methyl bromide)	74-83-9	8260B	ND		0.50	0.20	ug/L	1
2-Butanone (MEK)	78-93-3	8260B	2.2	J	10	2.0	ug/L	1
Carbon disulfide	75-15-0	8260B	ND		0.50	0.097	ug/L	1
Carbon tetrachloride	56-23-5	8260B	ND		0.50	0.085	ug/L	1
Chlorobenzene	108-90-7	8260B	ND		0.50	0.17	ug/L	1
Chloroethane	75-00-3	8260B	ND		0.50	0.17	ug/L	1
Chloroform	67-66-3	8260B	ND		0.50	0.17	ug/L	1
Chloromethane (Methyl chloride)	74-87-3	8260B	ND		0.50	0.17	ug/L	1
Cyclohexane	110-82-7	8260B	ND		0.50	0.30	ug/L	1
1,2-Dibromo-3-chloropropane (DBCP)	96-12-8	8260B	ND		0.50	0.069	ug/L	1
Dibromochloromethane	124-48-1	8260B	ND		0.50	0.17	ug/L	1
1,2-Dibromoethane (EDB)	106-93-4	8260B	ND		0.50	0.061	ug/L	1
1,3-Dichlorobenzene	541-73-1	8260B	ND		0.50	0.17	ug/L	1
1,2-Dichlorobenzene	95-50-1	8260B	ND		0.50	0.17	ug/L	1
1,4-Dichlorobenzene	106-46-7	8260B	ND		0.50	0.17	ug/L	1
Dichlorodifluoromethane	75-71-8	8260B	ND		0.50	0.071	ug/L	1
1,1-Dichloroethane	75-34-3	8260B	25		0.50	0.054	ug/L	1
1,2-Dichloroethane	107-06-2	8260B	ND		0.50	0.023	ug/L	1
trans-1,2-Dichloroethene	156-60-5	8260B	0.11	J	0.50	0.079	ug/L	1
1,1-Dichloroethene	75-35-4	8260B	40		0.50	0.094	ug/L	1
cis-1,2-Dichloroethene	156-59-2	8260B	4.1		0.50	0.087	ug/L	1
1,2-Dichloropropane	78-87-5	8260B	ND		0.50	0.081	ug/L	1
trans-1,3-Dichloropropene	10061-02-6	8260B	ND		0.50	0.18	ug/L	1
cis-1,3-Dichloropropene	10061-01-5	8260B	ND		0.50	0.090	ug/L	1
Ethylbenzene	100-41-4	8260B	ND		0.50	0.17	ug/L	1
2-Hexanone	591-78-6	8260B	ND		10	0.27	ug/L	1
Isopropylbenzene	98-82-8	8260B	ND		0.50	0.029	ug/L	1
Methyl acetate	79-20-9	8260B	ND		1.0	0.30	ug/L	1
Methyl tertiary butyl ether (MTBE)	1634-04-4	8260B	ND		0.50	0.019	ug/L	1
4-Methyl-2-pentanone	108-10-1	8260B	ND		10	0.31	ug/L	1
Methylcyclohexane	108-87-2	8260B	ND		5.0	0.95	ug/L	1
Methylene chloride	75-09-2	8260B	ND		0.50	0.17	ug/L	1
Styrene	100-42-5	8260B	ND		0.50	0.015	ug/L	1
1,1,2,2-Tetrachloroethane	79-34-5	8260B	ND		0.50	0.013	ug/L	1
Tetrachloroethene	127-18-4	8260B	0.79		0.50	0.014	ug/L	1
Toluene	108-88-3	8260B	1.0		0.50	0.17	ug/L	1
1,1,2-Trichloro-1,2,2-Trifluoroethane	76-13-1	8260B	ND		0.50	0.30	ug/L	1
1,2,4-Trichlorobenzene	120-82-1	8260B	ND		0.50	0.17	ug/L	1
1,1,1-Trichloroethane	71-55-6	8260B	ND		0.50	0.029	ug/L	1
1,1,2-Trichloroethane	79-00-5	8260B	ND		0.50	0.031	ug/L	1

PQL = Practical quantitation limit
B = Detected in the method blank
E = Quantitation of compound exceeded the calibration range
ND = Not detected at or above the MDL
J = Estimated result < PQL and ≥ MDL
P = The RPD between two GC columns exceeds 40%
Where applicable, all soil sample analysis are reported on a dry weight basis unless flagged with a "W"
N = Recovery is out of criteria
H = Out of holding time

Volatile Organic Compounds by GC/MS

Client: ARCADIS U.S., Inc.
Laboratory ID: LK05005-002
Description: D-30 (36-40')
Matrix: Aqueous
Date Sampled: 11/03/2010 1740
Date Received: 11/05/2010

Run	Prep Method	Analytical Method	Dilution	Analysis Date	Analyst	Prep Date	Batch
1	5030B	8260B	1	11/06/2010 0320	DLB		46044

Parameter	CAS Number	Analytical Method	Result	Q	PQL	MDL	Units	Run
Trichloroethene	79-01-6	8260B	8.8		0.50	0.024	ug/L	1
Trichlorofluoromethane	75-69-4	8260B	ND		0.50	0.051	ug/L	1
Vinyl chloride	75-01-4	8260B	ND		0.50	0.065	ug/L	1
Xylenes (total)	1330-20-7	8260B	0.22	J	0.50	0.17	ug/L	1

Surrogate	Q	Run 1 % Recovery	Acceptance Limits
1,2-Dichloroethane-d4		89	70-130
Bromofluorobenzene		99	70-130
Toluene-d8		124	70-130

PQL = Practical quantitation limit
B = Detected in the method blank
E = Quantitation of compound exceeded the calibration range
ND = Not detected at or above the MDL
J = Estimated result < PQL and ≥ MDL
P = The RPD between two GC columns exceeds 40%
Where applicable, all soil sample analysis are reported on a dry weight basis unless flagged with a "W"
N = Recovery is out of criteria
H = Out of holding time

Volatile Organic Compounds by GC/MS

Client: ARCADIS U.S., Inc.
Laboratory ID: LK05005-003
Description: D-30 (42-46')
Matrix: Aqueous
Date Sampled: 11/03/2010 1819
Date Received: 11/05/2010

Run	Prep Method	Analytical Method	Dilution	Analysis Date	Analyst	Prep Date	Batch
1	5030B	8260B	2	11/06/2010 0430	DLB		46044

Parameter	CAS Number	Analytical Method	Result	Q	PQL	MDL	Units	Run
Acetone	67-64-1	8260B	30		20	6.6	ug/L	1
Benzene	71-43-2	8260B	1.1		1.0	0.054	ug/L	1
Bromodichloromethane	75-27-4	8260B	ND		1.0	0.34	ug/L	1
Bromoform	75-25-2	8260B	ND		1.0	0.020	ug/L	1
Bromomethane (Methyl bromide)	74-83-9	8260B	ND		1.0	0.41	ug/L	1
2-Butanone (MEK)	78-93-3	8260B	ND		20	4.1	ug/L	1
Carbon disulfide	75-15-0	8260B	ND		1.0	0.19	ug/L	1
Carbon tetrachloride	56-23-5	8260B	ND		1.0	0.17	ug/L	1
Chlorobenzene	108-90-7	8260B	ND		1.0	0.34	ug/L	1
Chloroethane	75-00-3	8260B	ND		1.0	0.34	ug/L	1
Chloroform	67-66-3	8260B	ND		1.0	0.34	ug/L	1
Chloromethane (Methyl chloride)	74-87-3	8260B	4.1		1.0	0.35	ug/L	1
Cyclohexane	110-82-7	8260B	ND		1.0	0.60	ug/L	1
1,2-Dibromo-3-chloropropane (DBCP)	96-12-8	8260B	ND		1.0	0.14	ug/L	1
Dibromochloromethane	124-48-1	8260B	ND		1.0	0.34	ug/L	1
1,2-Dibromoethane (EDB)	106-93-4	8260B	ND		1.0	0.12	ug/L	1
1,3-Dichlorobenzene	541-73-1	8260B	ND		1.0	0.34	ug/L	1
1,2-Dichlorobenzene	95-50-1	8260B	ND		1.0	0.34	ug/L	1
1,4-Dichlorobenzene	106-46-7	8260B	ND		1.0	0.34	ug/L	1
Dichlorodifluoromethane	75-71-8	8260B	ND		1.0	0.14	ug/L	1
1,1-Dichloroethane	75-34-3	8260B	17		1.0	0.11	ug/L	1
1,2-Dichloroethane	107-06-2	8260B	ND		1.0	0.047	ug/L	1
trans-1,2-Dichloroethene	156-60-5	8260B	ND		1.0	0.16	ug/L	1
1,1-Dichloroethene	75-35-4	8260B	8.3		1.0	0.19	ug/L	1
cis-1,2-Dichloroethene	156-59-2	8260B	1.2		1.0	0.17	ug/L	1
1,2-Dichloropropane	78-87-5	8260B	ND		1.0	0.16	ug/L	1
trans-1,3-Dichloropropene	10061-02-6	8260B	ND		1.0	0.36	ug/L	1
cis-1,3-Dichloropropene	10061-01-5	8260B	ND		1.0	0.18	ug/L	1
Ethylbenzene	100-41-4	8260B	ND		1.0	0.34	ug/L	1
2-Hexanone	591-78-6	8260B	ND		20	0.55	ug/L	1
Isopropylbenzene	98-82-8	8260B	ND		1.0	0.058	ug/L	1
Methyl acetate	79-20-9	8260B	ND		2.0	0.60	ug/L	1
Methyl tertiary butyl ether (MTBE)	1634-04-4	8260B	ND		1.0	0.038	ug/L	1
4-Methyl-2-pentanone	108-10-1	8260B	ND		20	0.62	ug/L	1
Methylcyclohexane	108-87-2	8260B	ND		10	1.9	ug/L	1
Methylene chloride	75-09-2	8260B	ND		1.0	0.34	ug/L	1
Styrene	100-42-5	8260B	ND		1.0	0.030	ug/L	1
1,1,2,2-Tetrachloroethane	79-34-5	8260B	ND		1.0	0.026	ug/L	1
Tetrachloroethene	127-18-4	8260B	ND		1.0	0.029	ug/L	1
Toluene	108-88-3	8260B	1.1		1.0	0.34	ug/L	1
1,1,2-Trichloro-1,2,2-Trifluoroethane	76-13-1	8260B	ND		1.0	0.60	ug/L	1
1,2,4-Trichlorobenzene	120-82-1	8260B	ND		1.0	0.34	ug/L	1
1,1,1-Trichloroethane	71-55-6	8260B	ND		1.0	0.058	ug/L	1
1,1,2-Trichloroethane	79-00-5	8260B	ND		1.0	0.062	ug/L	1

PQL = Practical quantitation limit
B = Detected in the method blank
E = Quantitation of compound exceeded the calibration range
ND = Not detected at or above the MDL
J = Estimated result < PQL and ≥ MDL
P = The RPD between two GC columns exceeds 40%
Where applicable, all soil sample analysis are reported on a dry weight basis unless flagged with a "W"
N = Recovery is out of criteria
H = Out of holding time

Volatile Organic Compounds by GC/MS

Client: ARCADIS U.S., Inc.
Laboratory ID: LK05005-003
Description: D-30 (42-46')
Matrix: Aqueous
Date Sampled: 11/03/2010 1819
Date Received: 11/05/2010

Run	Prep Method	Analytical Method	Dilution	Analysis Date	Analyst	Prep Date	Batch
1	5030B	8260B	2	11/06/2010 0430	DLB		46044

Parameter	CAS Number	Analytical Method	Result	Q	PQL	MDL	Units	Run
Trichloroethene	79-01-6	8260B	1.4		1.0	0.049	ug/L	1
Trichlorofluoromethane	75-69-4	8260B	ND		1.0	0.10	ug/L	1
Vinyl chloride	75-01-4	8260B	ND		1.0	0.13	ug/L	1
Xylenes (total)	1330-20-7	8260B	ND		1.0	0.34	ug/L	1

Surrogate	Q	Run 1 % Recovery	Acceptance Limits
1,2-Dichloroethane-d4		85	70-130
Bromofluorobenzene		101	70-130
Toluene-d8		116	70-130

PQL = Practical quantitation limit
B = Detected in the method blank
E = Quantitation of compound exceeded the calibration range
ND = Not detected at or above the MDL
J = Estimated result < PQL and ≥ MDL
P = The RPD between two GC columns exceeds 40%
Where applicable, all soil sample analysis are reported on a dry weight basis unless flagged with a "W"
N = Recovery is out of criteria
H = Out of holding time

Volatile Organic Compounds by GC/MS

Client: ARCADIS U.S., Inc.
Laboratory ID: LK05005-004
Description: C-14 (30-34')
Matrix: Aqueous
Date Sampled: 11/04/2010 0856
Date Received: 11/05/2010

Run	Prep Method	Analytical Method	Dilution	Analysis Date	Analyst	Prep Date	Batch
1	5030B	8260B	1	11/06/2010 0209	DLB		46044

Parameter	CAS Number	Analytical Method	Result	Q	PQL	MDL	Units	Run
Acetone	67-64-1	8260B	3.8	J	10	3.3	ug/L	1
Benzene	71-43-2	8260B	0.12	J	0.50	0.027	ug/L	1
Bromodichloromethane	75-27-4	8260B	ND		0.50	0.17	ug/L	1
Bromoform	75-25-2	8260B	ND		0.50	0.010	ug/L	1
Bromomethane (Methyl bromide)	74-83-9	8260B	ND		0.50	0.20	ug/L	1
2-Butanone (MEK)	78-93-3	8260B	ND		10	2.0	ug/L	1
Carbon disulfide	75-15-0	8260B	0.99		0.50	0.097	ug/L	1
Carbon tetrachloride	56-23-5	8260B	ND		0.50	0.085	ug/L	1
Chlorobenzene	108-90-7	8260B	ND		0.50	0.17	ug/L	1
Chloroethane	75-00-3	8260B	ND		0.50	0.17	ug/L	1
Chloroform	67-66-3	8260B	ND		0.50	0.17	ug/L	1
Chloromethane (Methyl chloride)	74-87-3	8260B	ND		0.50	0.17	ug/L	1
Cyclohexane	110-82-7	8260B	ND		0.50	0.30	ug/L	1
1,2-Dibromo-3-chloropropane (DBCP)	96-12-8	8260B	ND		0.50	0.069	ug/L	1
Dibromochloromethane	124-48-1	8260B	ND		0.50	0.17	ug/L	1
1,2-Dibromoethane (EDB)	106-93-4	8260B	ND		0.50	0.061	ug/L	1
1,3-Dichlorobenzene	541-73-1	8260B	ND		0.50	0.17	ug/L	1
1,2-Dichlorobenzene	95-50-1	8260B	ND		0.50	0.17	ug/L	1
1,4-Dichlorobenzene	106-46-7	8260B	ND		0.50	0.17	ug/L	1
Dichlorodifluoromethane	75-71-8	8260B	ND		0.50	0.071	ug/L	1
1,1-Dichloroethane	75-34-3	8260B	ND		0.50	0.054	ug/L	1
1,2-Dichloroethane	107-06-2	8260B	ND		0.50	0.023	ug/L	1
trans-1,2-Dichloroethene	156-60-5	8260B	ND		0.50	0.079	ug/L	1
1,1-Dichloroethene	75-35-4	8260B	ND		0.50	0.094	ug/L	1
cis-1,2-Dichloroethene	156-59-2	8260B	ND		0.50	0.087	ug/L	1
1,2-Dichloropropane	78-87-5	8260B	ND		0.50	0.081	ug/L	1
trans-1,3-Dichloropropene	10061-02-6	8260B	ND		0.50	0.18	ug/L	1
cis-1,3-Dichloropropene	10061-01-5	8260B	ND		0.50	0.090	ug/L	1
Ethylbenzene	100-41-4	8260B	ND		0.50	0.17	ug/L	1
2-Hexanone	591-78-6	8260B	ND		10	0.27	ug/L	1
Isopropylbenzene	98-82-8	8260B	ND		0.50	0.029	ug/L	1
Methyl acetate	79-20-9	8260B	ND		1.0	0.30	ug/L	1
Methyl tertiary butyl ether (MTBE)	1634-04-4	8260B	ND		0.50	0.019	ug/L	1
4-Methyl-2-pentanone	108-10-1	8260B	ND		10	0.31	ug/L	1
Methylcyclohexane	108-87-2	8260B	ND		5.0	0.95	ug/L	1
Methylene chloride	75-09-2	8260B	ND		0.50	0.17	ug/L	1
Styrene	100-42-5	8260B	ND		0.50	0.015	ug/L	1
1,1,2,2-Tetrachloroethane	79-34-5	8260B	ND		0.50	0.013	ug/L	1
Tetrachloroethene	127-18-4	8260B	1.7		0.50	0.014	ug/L	1
Toluene	108-88-3	8260B	ND		0.50	0.17	ug/L	1
1,1,2-Trichloro-1,2,2-Trifluoroethane	76-13-1	8260B	ND		0.50	0.30	ug/L	1
1,2,4-Trichlorobenzene	120-82-1	8260B	ND		0.50	0.17	ug/L	1
1,1,1-Trichloroethane	71-55-6	8260B	ND		0.50	0.029	ug/L	1
1,1,2-Trichloroethane	79-00-5	8260B	ND		0.50	0.031	ug/L	1

PQL = Practical quantitation limit
B = Detected in the method blank
E = Quantitation of compound exceeded the calibration range
ND = Not detected at or above the MDL
J = Estimated result < PQL and ≥ MDL
P = The RPD between two GC columns exceeds 40%
Where applicable, all soil sample analysis are reported on a dry weight basis unless flagged with a "W"
N = Recovery is out of criteria
H = Out of holding time

Volatile Organic Compounds by GC/MS

Client: ARCADIS U.S., Inc.
Laboratory ID: LK05005-004
Description: C-14 (30-34')
Matrix: Aqueous
Date Sampled: 11/04/2010 0856
Date Received: 11/05/2010

Run	Prep Method	Analytical Method	Dilution	Analysis Date	Analyst	Prep Date	Batch
1	5030B	8260B	1	11/06/2010 0209	DLB		46044

Parameter	CAS Number	Analytical Method	Result	Q	PQL	MDL	Units	Run
Trichloroethene	79-01-6	8260B	0.61		0.50	0.024	ug/L	1
Trichlorofluoromethane	75-69-4	8260B	ND		0.50	0.051	ug/L	1
Vinyl chloride	75-01-4	8260B	ND		0.50	0.065	ug/L	1
Xylenes (total)	1330-20-7	8260B	ND		0.50	0.17	ug/L	1

Surrogate	Q	Run 1 % Recovery	Acceptance Limits
1,2-Dichloroethane-d4		81	70-130
Bromofluorobenzene		96	70-130
Toluene-d8		87	70-130

PQL = Practical quantitation limit
B = Detected in the method blank
E = Quantitation of compound exceeded the calibration range
ND = Not detected at or above the MDL
J = Estimated result < PQL and ≥ MDL
P = The RPD between two GC columns exceeds 40%
Where applicable, all soil sample analysis are reported on a dry weight basis unless flagged with a "W"
N = Recovery is out of criteria
H = Out of holding time

Volatile Organic Compounds by GC/MS

Client: ARCADIS U.S., Inc.
Laboratory ID: LK05005-005
Description: C-14 (36-40')
Matrix: Aqueous
Date Sampled: 11/04/2010 0929
Date Received: 11/05/2010

Run	Prep Method	Analytical Method	Dilution	Analysis Date	Analyst	Prep Date	Batch
1	5030B	8260B	2	11/06/2010 0407	DLB		46044

Parameter	CAS Number	Analytical Method	Result	Q	PQL	MDL	Units	Run
Acetone	67-64-1	8260B	ND		20	6.6	ug/L	1
Benzene	71-43-2	8260B	0.22	J	1.0	0.054	ug/L	1
Bromodichloromethane	75-27-4	8260B	ND		1.0	0.34	ug/L	1
Bromoform	75-25-2	8260B	ND		1.0	0.020	ug/L	1
Bromomethane (Methyl bromide)	74-83-9	8260B	ND		1.0	0.41	ug/L	1
2-Butanone (MEK)	78-93-3	8260B	ND		20	4.1	ug/L	1
Carbon disulfide	75-15-0	8260B	0.60	J	1.0	0.19	ug/L	1
Carbon tetrachloride	56-23-5	8260B	ND		1.0	0.17	ug/L	1
Chlorobenzene	108-90-7	8260B	ND		1.0	0.34	ug/L	1
Chloroethane	75-00-3	8260B	ND		1.0	0.34	ug/L	1
Chloroform	67-66-3	8260B	ND		1.0	0.34	ug/L	1
Chloromethane (Methyl chloride)	74-87-3	8260B	ND		1.0	0.35	ug/L	1
Cyclohexane	110-82-7	8260B	ND		1.0	0.60	ug/L	1
1,2-Dibromo-3-chloropropane (DBCP)	96-12-8	8260B	ND		1.0	0.14	ug/L	1
Dibromochloromethane	124-48-1	8260B	ND		1.0	0.34	ug/L	1
1,2-Dibromoethane (EDB)	106-93-4	8260B	ND		1.0	0.12	ug/L	1
1,3-Dichlorobenzene	541-73-1	8260B	ND		1.0	0.34	ug/L	1
1,2-Dichlorobenzene	95-50-1	8260B	ND		1.0	0.34	ug/L	1
1,4-Dichlorobenzene	106-46-7	8260B	ND		1.0	0.34	ug/L	1
Dichlorodifluoromethane	75-71-8	8260B	ND		1.0	0.14	ug/L	1
1,1-Dichloroethane	75-34-3	8260B	ND		1.0	0.11	ug/L	1
1,2-Dichloroethane	107-06-2	8260B	ND		1.0	0.047	ug/L	1
trans-1,2-Dichloroethene	156-60-5	8260B	ND		1.0	0.16	ug/L	1
1,1-Dichloroethene	75-35-4	8260B	ND		1.0	0.19	ug/L	1
cis-1,2-Dichloroethene	156-59-2	8260B	ND		1.0	0.17	ug/L	1
1,2-Dichloropropane	78-87-5	8260B	ND		1.0	0.16	ug/L	1
trans-1,3-Dichloropropene	10061-02-6	8260B	ND		1.0	0.36	ug/L	1
cis-1,3-Dichloropropene	10061-01-5	8260B	ND		1.0	0.18	ug/L	1
Ethylbenzene	100-41-4	8260B	ND		1.0	0.34	ug/L	1
2-Hexanone	591-78-6	8260B	ND		20	0.55	ug/L	1
Isopropylbenzene	98-82-8	8260B	ND		1.0	0.058	ug/L	1
Methyl acetate	79-20-9	8260B	ND		2.0	0.60	ug/L	1
Methyl tertiary butyl ether (MTBE)	1634-04-4	8260B	ND		1.0	0.038	ug/L	1
4-Methyl-2-pentanone	108-10-1	8260B	ND		20	0.62	ug/L	1
Methylcyclohexane	108-87-2	8260B	ND		10	1.9	ug/L	1
Methylene chloride	75-09-2	8260B	ND		1.0	0.34	ug/L	1
Styrene	100-42-5	8260B	ND		1.0	0.030	ug/L	1
1,1,2,2-Tetrachloroethane	79-34-5	8260B	ND		1.0	0.026	ug/L	1
Tetrachloroethene	127-18-4	8260B	0.65	J	1.0	0.029	ug/L	1
Toluene	108-88-3	8260B	0.43	J	1.0	0.34	ug/L	1
1,1,2-Trichloro-1,2,2-Trifluoroethane	76-13-1	8260B	ND		1.0	0.60	ug/L	1
1,2,4-Trichlorobenzene	120-82-1	8260B	ND		1.0	0.34	ug/L	1
1,1,1-Trichloroethane	71-55-6	8260B	ND		1.0	0.058	ug/L	1
1,1,2-Trichloroethane	79-00-5	8260B	ND		1.0	0.062	ug/L	1

PQL = Practical quantitation limit
B = Detected in the method blank
E = Quantitation of compound exceeded the calibration range
ND = Not detected at or above the MDL
J = Estimated result < PQL and ≥ MDL
P = The RPD between two GC columns exceeds 40%
Where applicable, all soil sample analysis are reported on a dry weight basis unless flagged with a "W"
N = Recovery is out of criteria
H = Out of holding time

Volatile Organic Compounds by GC/MS

Client: ARCADIS U.S., Inc.
Laboratory ID: LK05005-005
Description: C-14 (36-40')
Matrix: Aqueous
Date Sampled: 11/04/2010 0929
Date Received: 11/05/2010

Run	Prep Method	Analytical Method	Dilution	Analysis Date	Analyst	Prep Date	Batch
1	5030B	8260B	2	11/06/2010 0407	DLB		46044

Parameter	CAS Number	Analytical Method	Result	Q	PQL	MDL	Units	Run
Trichloroethene	79-01-6	8260B	2.7		1.0	0.049	ug/L	1
Trichlorofluoromethane	75-69-4	8260B	ND		1.0	0.10	ug/L	1
Vinyl chloride	75-01-4	8260B	ND		1.0	0.13	ug/L	1
Xylenes (total)	1330-20-7	8260B	ND		1.0	0.34	ug/L	1

Surrogate	Q	Run 1 % Recovery	Acceptance Limits
1,2-Dichloroethane-d4		94	70-130
Bromofluorobenzene		83	70-130
Toluene-d8		108	70-130

PQL = Practical quantitation limit
B = Detected in the method blank
E = Quantitation of compound exceeded the calibration range
ND = Not detected at or above the MDL
J = Estimated result < PQL and ≥ MDL
P = The RPD between two GC columns exceeds 40%
Where applicable, all soil sample analysis are reported on a dry weight basis unless flagged with a "W"
N = Recovery is out of criteria
H = Out of holding time

Volatile Organic Compounds by GC/MS

Client: ARCADIS U.S., Inc.
Laboratory ID: LK05005-006
Description: C-14 (42-46')
Matrix: Aqueous
Date Sampled: 11/04/2010 1000
Date Received: 11/05/2010

Run	Prep Method	Analytical Method	Dilution	Analysis Date	Analyst	Prep Date	Batch
1	5030B	8260B	1	11/06/2010 0146	DLB		46044

Parameter	CAS Number	Analytical Method	Result	Q	PQL	MDL	Units	Run
Acetone	67-64-1	8260B	ND		10	3.3	ug/L	1
Benzene	71-43-2	8260B	0.10	J	0.50	0.027	ug/L	1
Bromodichloromethane	75-27-4	8260B	ND		0.50	0.17	ug/L	1
Bromoform	75-25-2	8260B	ND		0.50	0.010	ug/L	1
Bromomethane (Methyl bromide)	74-83-9	8260B	ND		0.50	0.20	ug/L	1
2-Butanone (MEK)	78-93-3	8260B	ND		10	2.0	ug/L	1
Carbon disulfide	75-15-0	8260B	ND		0.50	0.097	ug/L	1
Carbon tetrachloride	56-23-5	8260B	ND		0.50	0.085	ug/L	1
Chlorobenzene	108-90-7	8260B	ND		0.50	0.17	ug/L	1
Chloroethane	75-00-3	8260B	ND		0.50	0.17	ug/L	1
Chloroform	67-66-3	8260B	ND		0.50	0.17	ug/L	1
Chloromethane (Methyl chloride)	74-87-3	8260B	ND		0.50	0.17	ug/L	1
Cyclohexane	110-82-7	8260B	ND		0.50	0.30	ug/L	1
1,2-Dibromo-3-chloropropane (DBCP)	96-12-8	8260B	ND		0.50	0.069	ug/L	1
Dibromochloromethane	124-48-1	8260B	ND		0.50	0.17	ug/L	1
1,2-Dibromoethane (EDB)	106-93-4	8260B	ND		0.50	0.061	ug/L	1
1,3-Dichlorobenzene	541-73-1	8260B	ND		0.50	0.17	ug/L	1
1,2-Dichlorobenzene	95-50-1	8260B	ND		0.50	0.17	ug/L	1
1,4-Dichlorobenzene	106-46-7	8260B	ND		0.50	0.17	ug/L	1
Dichlorodifluoromethane	75-71-8	8260B	ND		0.50	0.071	ug/L	1
1,1-Dichloroethane	75-34-3	8260B	ND		0.50	0.054	ug/L	1
1,2-Dichloroethane	107-06-2	8260B	ND		0.50	0.023	ug/L	1
trans-1,2-Dichloroethene	156-60-5	8260B	ND		0.50	0.079	ug/L	1
1,1-Dichloroethene	75-35-4	8260B	ND		0.50	0.094	ug/L	1
cis-1,2-Dichloroethene	156-59-2	8260B	ND		0.50	0.087	ug/L	1
1,2-Dichloropropane	78-87-5	8260B	ND		0.50	0.081	ug/L	1
trans-1,3-Dichloropropene	10061-02-6	8260B	ND		0.50	0.18	ug/L	1
cis-1,3-Dichloropropene	10061-01-5	8260B	ND		0.50	0.090	ug/L	1
Ethylbenzene	100-41-4	8260B	ND		0.50	0.17	ug/L	1
2-Hexanone	591-78-6	8260B	ND		10	0.27	ug/L	1
Isopropylbenzene	98-82-8	8260B	ND		0.50	0.029	ug/L	1
Methyl acetate	79-20-9	8260B	ND		1.0	0.30	ug/L	1
Methyl tertiary butyl ether (MTBE)	1634-04-4	8260B	ND		0.50	0.019	ug/L	1
4-Methyl-2-pentanone	108-10-1	8260B	ND		10	0.31	ug/L	1
Methylcyclohexane	108-87-2	8260B	ND		5.0	0.95	ug/L	1
Methylene chloride	75-09-2	8260B	ND		0.50	0.17	ug/L	1
Styrene	100-42-5	8260B	ND		0.50	0.015	ug/L	1
1,1,2,2-Tetrachloroethane	79-34-5	8260B	ND		0.50	0.013	ug/L	1
Tetrachloroethene	127-18-4	8260B	0.13	J	0.50	0.014	ug/L	1
Toluene	108-88-3	8260B	0.18	J	0.50	0.17	ug/L	1
1,1,2-Trichloro-1,2,2-Trifluoroethane	76-13-1	8260B	ND		0.50	0.30	ug/L	1
1,2,4-Trichlorobenzene	120-82-1	8260B	ND		0.50	0.17	ug/L	1
1,1,1-Trichloroethane	71-55-6	8260B	ND		0.50	0.029	ug/L	1
1,1,2-Trichloroethane	79-00-5	8260B	ND		0.50	0.031	ug/L	1

PQL = Practical quantitation limit
B = Detected in the method blank
E = Quantitation of compound exceeded the calibration range
ND = Not detected at or above the MDL
J = Estimated result < PQL and ≥ MDL
P = The RPD between two GC columns exceeds 40%
Where applicable, all soil sample analysis are reported on a dry weight basis unless flagged with a "W"
N = Recovery is out of criteria
H = Out of holding time

Volatile Organic Compounds by GC/MS

Client: ARCADIS U.S., Inc.
Laboratory ID: LK05005-006
Description: C-14 (42-46')
Matrix: Aqueous
Date Sampled: 11/04/2010 1000
Date Received: 11/05/2010

Run	Prep Method	Analytical Method	Dilution	Analysis Date	Analyst	Prep Date	Batch
1	5030B	8260B	1	11/06/2010 0146	DLB		46044

Parameter	CAS Number	Analytical Method	Result	Q	PQL	MDL	Units	Run
Trichloroethene	79-01-6	8260B	0.28	J	0.50	0.024	ug/L	1
Trichlorofluoromethane	75-69-4	8260B	ND		0.50	0.051	ug/L	1
Vinyl chloride	75-01-4	8260B	ND		0.50	0.065	ug/L	1
Xylenes (total)	1330-20-7	8260B	ND		0.50	0.17	ug/L	1

Surrogate	Q	Run 1 % Recovery	Acceptance Limits
1,2-Dichloroethane-d4		93	70-130
Bromofluorobenzene		99	70-130
Toluene-d8		108	70-130

PQL = Practical quantitation limit
B = Detected in the method blank
E = Quantitation of compound exceeded the calibration range
ND = Not detected at or above the MDL
J = Estimated result < PQL and ≥ MDL
P = The RPD between two GC columns exceeds 40%
Where applicable, all soil sample analysis are reported on a dry weight basis unless flagged with a "W"
N = Recovery is out of criteria
H = Out of holding time

Volatile Organic Compounds by GC/MS

Client: ARCADIS U.S., Inc.
Laboratory ID: LK05005-007
Description: D-23 (30-34')
Matrix: Aqueous
Date Sampled: 11/04/2010 1143
Date Received: 11/05/2010

Run	Prep Method	Analytical Method	Dilution	Analysis Date	Analyst	Prep Date	Batch
1	5030B	8260B	1	11/06/2010 0233	DLB		46044

Parameter	CAS Number	Analytical Method	Result	Q	PQL	MDL	Units	Run
Acetone	67-64-1	8260B	ND		10	3.3	ug/L	1
Benzene	71-43-2	8260B	0.11	J	0.50	0.027	ug/L	1
Bromodichloromethane	75-27-4	8260B	ND		0.50	0.17	ug/L	1
Bromoform	75-25-2	8260B	ND		0.50	0.010	ug/L	1
Bromomethane (Methyl bromide)	74-83-9	8260B	ND		0.50	0.20	ug/L	1
2-Butanone (MEK)	78-93-3	8260B	ND		10	2.0	ug/L	1
Carbon disulfide	75-15-0	8260B	0.52		0.50	0.097	ug/L	1
Carbon tetrachloride	56-23-5	8260B	ND		0.50	0.085	ug/L	1
Chlorobenzene	108-90-7	8260B	ND		0.50	0.17	ug/L	1
Chloroethane	75-00-3	8260B	ND		0.50	0.17	ug/L	1
Chloroform	67-66-3	8260B	ND		0.50	0.17	ug/L	1
Chloromethane (Methyl chloride)	74-87-3	8260B	ND		0.50	0.17	ug/L	1
Cyclohexane	110-82-7	8260B	ND		0.50	0.30	ug/L	1
1,2-Dibromo-3-chloropropane (DBCP)	96-12-8	8260B	ND		0.50	0.069	ug/L	1
Dibromochloromethane	124-48-1	8260B	ND		0.50	0.17	ug/L	1
1,2-Dibromoethane (EDB)	106-93-4	8260B	ND		0.50	0.061	ug/L	1
1,3-Dichlorobenzene	541-73-1	8260B	ND		0.50	0.17	ug/L	1
1,2-Dichlorobenzene	95-50-1	8260B	ND		0.50	0.17	ug/L	1
1,4-Dichlorobenzene	106-46-7	8260B	ND		0.50	0.17	ug/L	1
Dichlorodifluoromethane	75-71-8	8260B	ND		0.50	0.071	ug/L	1
1,1-Dichloroethane	75-34-3	8260B	ND		0.50	0.054	ug/L	1
1,2-Dichloroethane	107-06-2	8260B	ND		0.50	0.023	ug/L	1
trans-1,2-Dichloroethene	156-60-5	8260B	0.23	J	0.50	0.079	ug/L	1
1,1-Dichloroethene	75-35-4	8260B	0.11	J	0.50	0.094	ug/L	1
cis-1,2-Dichloroethene	156-59-2	8260B	2.1		0.50	0.087	ug/L	1
1,2-Dichloropropane	78-87-5	8260B	ND		0.50	0.081	ug/L	1
trans-1,3-Dichloropropene	10061-02-6	8260B	ND		0.50	0.18	ug/L	1
cis-1,3-Dichloropropene	10061-01-5	8260B	ND		0.50	0.090	ug/L	1
Ethylbenzene	100-41-4	8260B	ND		0.50	0.17	ug/L	1
2-Hexanone	591-78-6	8260B	ND		10	0.27	ug/L	1
Isopropylbenzene	98-82-8	8260B	ND		0.50	0.029	ug/L	1
Methyl acetate	79-20-9	8260B	ND		1.0	0.30	ug/L	1
Methyl tertiary butyl ether (MTBE)	1634-04-4	8260B	ND		0.50	0.019	ug/L	1
4-Methyl-2-pentanone	108-10-1	8260B	ND		10	0.31	ug/L	1
Methylcyclohexane	108-87-2	8260B	ND		5.0	0.95	ug/L	1
Methylene chloride	75-09-2	8260B	ND		0.50	0.17	ug/L	1
Styrene	100-42-5	8260B	ND		0.50	0.015	ug/L	1
1,1,2,2-Tetrachloroethane	79-34-5	8260B	ND		0.50	0.013	ug/L	1
Tetrachloroethene	127-18-4	8260B	0.16	J	0.50	0.014	ug/L	1
Toluene	108-88-3	8260B	0.22	J	0.50	0.17	ug/L	1
1,1,2-Trichloro-1,2,2-Trifluoroethane	76-13-1	8260B	ND		0.50	0.30	ug/L	1
1,2,4-Trichlorobenzene	120-82-1	8260B	ND		0.50	0.17	ug/L	1
1,1,1-Trichloroethane	71-55-6	8260B	ND		0.50	0.029	ug/L	1
1,1,2-Trichloroethane	79-00-5	8260B	ND		0.50	0.031	ug/L	1

PQL = Practical quantitation limit
B = Detected in the method blank
E = Quantitation of compound exceeded the calibration range
ND = Not detected at or above the MDL
J = Estimated result < PQL and ≥ MDL
P = The RPD between two GC columns exceeds 40%
Where applicable, all soil sample analysis are reported on a dry weight basis unless flagged with a "W"
N = Recovery is out of criteria
H = Out of holding time

Volatile Organic Compounds by GC/MS

Client: ARCADIS U.S., Inc.
Laboratory ID: LK05005-007
Description: D-23 (30-34')
Matrix: Aqueous
Date Sampled: 11/04/2010 1143
Date Received: 11/05/2010

Run	Prep Method	Analytical Method	Dilution	Analysis Date	Analyst	Prep Date	Batch
1	5030B	8260B	1	11/06/2010 0233	DLB		46044

Parameter	CAS Number	Analytical Method	Result	Q	PQL	MDL	Units	Run
Trichloroethene	79-01-6	8260B	7.3		0.50	0.024	ug/L	1
Trichlorofluoromethane	75-69-4	8260B	ND		0.50	0.051	ug/L	1
Vinyl chloride	75-01-4	8260B	ND		0.50	0.065	ug/L	1
Xylenes (total)	1330-20-7	8260B	ND		0.50	0.17	ug/L	1

Surrogate	Q	Run 1 % Recovery	Acceptance Limits
1,2-Dichloroethane-d4		90	70-130
Bromofluorobenzene		107	70-130
Toluene-d8		106	70-130

PQL = Practical quantitation limit
B = Detected in the method blank
E = Quantitation of compound exceeded the calibration range
ND = Not detected at or above the MDL
J = Estimated result < PQL and ≥ MDL
P = The RPD between two GC columns exceeds 40%
Where applicable, all soil sample analysis are reported on a dry weight basis unless flagged with a "W"
N = Recovery is out of criteria
H = Out of holding time

Volatile Organic Compounds by GC/MS

Client: ARCADIS U.S., Inc.
Laboratory ID: LK05005-008
Description: D-23 (36-40')
Matrix: Aqueous
Date Sampled: 11/04/2010 1223
Date Received: 11/05/2010

Run	Prep Method	Analytical Method	Dilution	Analysis Date	Analyst	Prep Date	Batch
1	5030B	8260B	1	11/06/2010 0256	DLB		46044

Parameter	CAS Number	Analytical Method	Result	Q	PQL	MDL	Units	Run
Acetone	67-64-1	8260B	4.1	J	10	3.3	ug/L	1
Benzene	71-43-2	8260B	0.21	J	0.50	0.027	ug/L	1
Bromodichloromethane	75-27-4	8260B	ND		0.50	0.17	ug/L	1
Bromoform	75-25-2	8260B	ND		0.50	0.010	ug/L	1
Bromomethane (Methyl bromide)	74-83-9	8260B	ND		0.50	0.20	ug/L	1
2-Butanone (MEK)	78-93-3	8260B	2.9	J	10	2.0	ug/L	1
Carbon disulfide	75-15-0	8260B	0.70		0.50	0.097	ug/L	1
Carbon tetrachloride	56-23-5	8260B	ND		0.50	0.085	ug/L	1
Chlorobenzene	108-90-7	8260B	ND		0.50	0.17	ug/L	1
Chloroethane	75-00-3	8260B	ND		0.50	0.17	ug/L	1
Chloroform	67-66-3	8260B	ND		0.50	0.17	ug/L	1
Chloromethane (Methyl chloride)	74-87-3	8260B	ND		0.50	0.17	ug/L	1
Cyclohexane	110-82-7	8260B	ND		0.50	0.30	ug/L	1
1,2-Dibromo-3-chloropropane (DBCP)	96-12-8	8260B	ND		0.50	0.069	ug/L	1
Dibromochloromethane	124-48-1	8260B	ND		0.50	0.17	ug/L	1
1,2-Dibromoethane (EDB)	106-93-4	8260B	ND		0.50	0.061	ug/L	1
1,3-Dichlorobenzene	541-73-1	8260B	ND		0.50	0.17	ug/L	1
1,2-Dichlorobenzene	95-50-1	8260B	ND		0.50	0.17	ug/L	1
1,4-Dichlorobenzene	106-46-7	8260B	ND		0.50	0.17	ug/L	1
Dichlorodifluoromethane	75-71-8	8260B	ND		0.50	0.071	ug/L	1
1,1-Dichloroethane	75-34-3	8260B	0.21	J	0.50	0.054	ug/L	1
1,2-Dichloroethane	107-06-2	8260B	ND		0.50	0.023	ug/L	1
trans-1,2-Dichloroethene	156-60-5	8260B	0.80		0.50	0.079	ug/L	1
1,1-Dichloroethene	75-35-4	8260B	0.22	J	0.50	0.094	ug/L	1
cis-1,2-Dichloroethene	156-59-2	8260B	15		0.50	0.087	ug/L	1
1,2-Dichloropropane	78-87-5	8260B	ND		0.50	0.081	ug/L	1
trans-1,3-Dichloropropene	10061-02-6	8260B	ND		0.50	0.18	ug/L	1
cis-1,3-Dichloropropene	10061-01-5	8260B	ND		0.50	0.090	ug/L	1
Ethylbenzene	100-41-4	8260B	ND		0.50	0.17	ug/L	1
2-Hexanone	591-78-6	8260B	ND		10	0.27	ug/L	1
Isopropylbenzene	98-82-8	8260B	ND		0.50	0.029	ug/L	1
Methyl acetate	79-20-9	8260B	ND		1.0	0.30	ug/L	1
Methyl tertiary butyl ether (MTBE)	1634-04-4	8260B	ND		0.50	0.019	ug/L	1
4-Methyl-2-pentanone	108-10-1	8260B	ND		10	0.31	ug/L	1
Methylcyclohexane	108-87-2	8260B	ND		5.0	0.95	ug/L	1
Methylene chloride	75-09-2	8260B	ND		0.50	0.17	ug/L	1
Styrene	100-42-5	8260B	ND		0.50	0.015	ug/L	1
1,1,2,2-Tetrachloroethane	79-34-5	8260B	ND		0.50	0.013	ug/L	1
Tetrachloroethene	127-18-4	8260B	10		0.50	0.014	ug/L	1
Toluene	108-88-3	8260B	0.32	J	0.50	0.17	ug/L	1
1,1,2-Trichloro-1,2,2-Trifluoroethane	76-13-1	8260B	ND		0.50	0.30	ug/L	1
1,2,4-Trichlorobenzene	120-82-1	8260B	ND		0.50	0.17	ug/L	1
1,1,1-Trichloroethane	71-55-6	8260B	ND		0.50	0.029	ug/L	1
1,1,2-Trichloroethane	79-00-5	8260B	ND		0.50	0.031	ug/L	1

PQL = Practical quantitation limit
B = Detected in the method blank
E = Quantitation of compound exceeded the calibration range
ND = Not detected at or above the MDL
J = Estimated result < PQL and ≥ MDL
P = The RPD between two GC columns exceeds 40%
Where applicable, all soil sample analysis are reported on a dry weight basis unless flagged with a "W"
N = Recovery is out of criteria
H = Out of holding time

Volatile Organic Compounds by GC/MS

Client: ARCADIS U.S., Inc.
Laboratory ID: LK05005-008
Description: D-23 (36-40')
Matrix: Aqueous
Date Sampled: 11/04/2010 1223
Date Received: 11/05/2010

Run	Prep Method	Analytical Method	Dilution	Analysis Date	Analyst	Prep Date	Batch
1	5030B	8260B	1	11/06/2010 0256	DLB		46044

Parameter	CAS Number	Analytical Method	Result	Q	PQL	MDL	Units	Run
Trichloroethene	79-01-6	8260B	68		0.50	0.024	ug/L	1
Trichlorofluoromethane	75-69-4	8260B	ND		0.50	0.051	ug/L	1
Vinyl chloride	75-01-4	8260B	ND		0.50	0.065	ug/L	1
Xylenes (total)	1330-20-7	8260B	0.17	J	0.50	0.17	ug/L	1

Surrogate	Q	Run 1 % Recovery	Acceptance Limits
1,2-Dichloroethane-d4		89	70-130
Bromofluorobenzene		88	70-130
Toluene-d8		110	70-130

PQL = Practical quantitation limit
B = Detected in the method blank
E = Quantitation of compound exceeded the calibration range
ND = Not detected at or above the MDL
J = Estimated result < PQL and ≥ MDL
P = The RPD between two GC columns exceeds 40%
Where applicable, all soil sample analysis are reported on a dry weight basis unless flagged with a "W"
N = Recovery is out of criteria
H = Out of holding time

Volatile Organic Compounds by GC/MS

Client: ARCADIS U.S., Inc.
Laboratory ID: LK05005-009
Description: D-23 (42-46')
Matrix: Aqueous
Date Sampled: 11/04/2010 1307
Date Received: 11/05/2010

Run	Prep Method	Analytical Method	Dilution	Analysis Date	Analyst	Prep Date	Batch
1	5030B	8260B	1	11/06/2010 0343	DLB		46044

Parameter	CAS Number	Analytical Method	Result	Q	PQL	MDL	Units	Run
Acetone	67-64-1	8260B	5.9	J	10	3.3	ug/L	1
Benzene	71-43-2	8260B	0.24	J	0.50	0.027	ug/L	1
Bromodichloromethane	75-27-4	8260B	ND		0.50	0.17	ug/L	1
Bromoform	75-25-2	8260B	ND		0.50	0.010	ug/L	1
Bromomethane (Methyl bromide)	74-83-9	8260B	ND		0.50	0.20	ug/L	1
2-Butanone (MEK)	78-93-3	8260B	ND		10	2.0	ug/L	1
Carbon disulfide	75-15-0	8260B	ND		0.50	0.097	ug/L	1
Carbon tetrachloride	56-23-5	8260B	ND		0.50	0.085	ug/L	1
Chlorobenzene	108-90-7	8260B	ND		0.50	0.17	ug/L	1
Chloroethane	75-00-3	8260B	ND		0.50	0.17	ug/L	1
Chloroform	67-66-3	8260B	ND		0.50	0.17	ug/L	1
Chloromethane (Methyl chloride)	74-87-3	8260B	ND		0.50	0.17	ug/L	1
Cyclohexane	110-82-7	8260B	ND		0.50	0.30	ug/L	1
1,2-Dibromo-3-chloropropane (DBCP)	96-12-8	8260B	ND		0.50	0.069	ug/L	1
Dibromochloromethane	124-48-1	8260B	ND		0.50	0.17	ug/L	1
1,2-Dibromoethane (EDB)	106-93-4	8260B	ND		0.50	0.061	ug/L	1
1,3-Dichlorobenzene	541-73-1	8260B	ND		0.50	0.17	ug/L	1
1,2-Dichlorobenzene	95-50-1	8260B	ND		0.50	0.17	ug/L	1
1,4-Dichlorobenzene	106-46-7	8260B	ND		0.50	0.17	ug/L	1
Dichlorodifluoromethane	75-71-8	8260B	ND		0.50	0.071	ug/L	1
1,1-Dichloroethane	75-34-3	8260B	ND		0.50	0.054	ug/L	1
1,2-Dichloroethane	107-06-2	8260B	ND		0.50	0.023	ug/L	1
trans-1,2-Dichloroethene	156-60-5	8260B	ND		0.50	0.079	ug/L	1
1,1-Dichloroethene	75-35-4	8260B	ND		0.50	0.094	ug/L	1
cis-1,2-Dichloroethene	156-59-2	8260B	6.3		0.50	0.087	ug/L	1
1,2-Dichloropropane	78-87-5	8260B	ND		0.50	0.081	ug/L	1
trans-1,3-Dichloropropene	10061-02-6	8260B	ND		0.50	0.18	ug/L	1
cis-1,3-Dichloropropene	10061-01-5	8260B	ND		0.50	0.090	ug/L	1
Ethylbenzene	100-41-4	8260B	ND		0.50	0.17	ug/L	1
2-Hexanone	591-78-6	8260B	ND		10	0.27	ug/L	1
Isopropylbenzene	98-82-8	8260B	ND		0.50	0.029	ug/L	1
Methyl acetate	79-20-9	8260B	ND		1.0	0.30	ug/L	1
Methyl tertiary butyl ether (MTBE)	1634-04-4	8260B	ND		0.50	0.019	ug/L	1
4-Methyl-2-pentanone	108-10-1	8260B	ND		10	0.31	ug/L	1
Methylcyclohexane	108-87-2	8260B	ND		5.0	0.95	ug/L	1
Methylene chloride	75-09-2	8260B	ND		0.50	0.17	ug/L	1
Styrene	100-42-5	8260B	ND		0.50	0.015	ug/L	1
1,1,2,2-Tetrachloroethane	79-34-5	8260B	ND		0.50	0.013	ug/L	1
Tetrachloroethene	127-18-4	8260B	0.20	J	0.50	0.014	ug/L	1
Toluene	108-88-3	8260B	0.25	J	0.50	0.17	ug/L	1
1,1,2-Trichloro-1,2,2-Trifluoroethane	76-13-1	8260B	ND		0.50	0.30	ug/L	1
1,2,4-Trichlorobenzene	120-82-1	8260B	ND		0.50	0.17	ug/L	1
1,1,1-Trichloroethane	71-55-6	8260B	ND		0.50	0.029	ug/L	1
1,1,2-Trichloroethane	79-00-5	8260B	ND		0.50	0.031	ug/L	1

PQL = Practical quantitation limit
B = Detected in the method blank
E = Quantitation of compound exceeded the calibration range
ND = Not detected at or above the MDL
J = Estimated result < PQL and ≥ MDL
P = The RPD between two GC columns exceeds 40%
Where applicable, all soil sample analysis are reported on a dry weight basis unless flagged with a "W"
N = Recovery is out of criteria
H = Out of holding time

Volatile Organic Compounds by GC/MS

Client: ARCADIS U.S., Inc.
Laboratory ID: LK05005-009
Description: D-23 (42-46')
Matrix: Aqueous
Date Sampled: 11/04/2010 1307
Date Received: 11/05/2010

Run	Prep Method	Analytical Method	Dilution	Analysis Date	Analyst	Prep Date	Batch
1	5030B	8260B	1	11/06/2010 0343	DLB		46044

Parameter	CAS Number	Analytical Method	Result	Q	PQL	MDL	Units	Run
Trichloroethene	79-01-6	8260B	6.4		0.50	0.024	ug/L	1
Trichlorofluoromethane	75-69-4	8260B	ND		0.50	0.051	ug/L	1
Vinyl chloride	75-01-4	8260B	ND		0.50	0.065	ug/L	1
Xylenes (total)	1330-20-7	8260B	ND		0.50	0.17	ug/L	1

Surrogate	Q	Run 1 % Recovery	Acceptance Limits
1,2-Dichloroethane-d4		89	70-130
Bromofluorobenzene		88	70-130
Toluene-d8		110	70-130

PQL = Practical quantitation limit
B = Detected in the method blank
E = Quantitation of compound exceeded the calibration range
ND = Not detected at or above the MDL
J = Estimated result < PQL and ≥ MDL
P = The RPD between two GC columns exceeds 40%
Where applicable, all soil sample analysis are reported on a dry weight basis unless flagged with a "W"
N = Recovery is out of criteria
H = Out of holding time

Volatile Organic Compounds by GC/MS

Client: ARCADIS U.S., Inc.
Laboratory ID: LK05005-010
Description: Trip Blank
Matrix: Aqueous
Date Sampled: 11/05/2010 0900
Date Received: 11/05/2010

Run	Prep Method	Analytical Method	Dilution	Analysis Date	Analyst	Prep Date	Batch
1	5030B	8260B	1	11/05/2010 1440	DLB		45932

Parameter	CAS Number	Analytical Method	Result	Q	PQL	MDL	Units	Run
Acetone	67-64-1	8260B	ND		10	3.3	ug/L	1
Benzene	71-43-2	8260B	ND		0.50	0.027	ug/L	1
Bromodichloromethane	75-27-4	8260B	ND		0.50	0.17	ug/L	1
Bromoform	75-25-2	8260B	ND		0.50	0.010	ug/L	1
Bromomethane (Methyl bromide)	74-83-9	8260B	ND		0.50	0.20	ug/L	1
2-Butanone (MEK)	78-93-3	8260B	ND		10	2.0	ug/L	1
Carbon disulfide	75-15-0	8260B	0.17	J	0.50	0.097	ug/L	1
Carbon tetrachloride	56-23-5	8260B	ND		0.50	0.085	ug/L	1
Chlorobenzene	108-90-7	8260B	ND		0.50	0.17	ug/L	1
Chloroethane	75-00-3	8260B	ND		0.50	0.17	ug/L	1
Chloroform	67-66-3	8260B	ND		0.50	0.17	ug/L	1
Chloromethane (Methyl chloride)	74-87-3	8260B	ND		0.50	0.17	ug/L	1
Cyclohexane	110-82-7	8260B	ND		0.50	0.30	ug/L	1
1,2-Dibromo-3-chloropropane (DBCP)	96-12-8	8260B	ND		0.50	0.069	ug/L	1
Dibromochloromethane	124-48-1	8260B	ND		0.50	0.17	ug/L	1
1,2-Dibromoethane (EDB)	106-93-4	8260B	ND		0.50	0.061	ug/L	1
1,3-Dichlorobenzene	541-73-1	8260B	ND		0.50	0.17	ug/L	1
1,2-Dichlorobenzene	95-50-1	8260B	ND		0.50	0.17	ug/L	1
1,4-Dichlorobenzene	106-46-7	8260B	ND		0.50	0.17	ug/L	1
Dichlorodifluoromethane	75-71-8	8260B	ND		0.50	0.071	ug/L	1
1,1-Dichloroethane	75-34-3	8260B	ND		0.50	0.054	ug/L	1
1,2-Dichloroethane	107-06-2	8260B	ND		0.50	0.023	ug/L	1
trans-1,2-Dichloroethene	156-60-5	8260B	ND		0.50	0.079	ug/L	1
1,1-Dichloroethene	75-35-4	8260B	ND		0.50	0.094	ug/L	1
cis-1,2-Dichloroethene	156-59-2	8260B	ND		0.50	0.087	ug/L	1
1,2-Dichloropropane	78-87-5	8260B	ND		0.50	0.081	ug/L	1
trans-1,3-Dichloropropene	10061-02-6	8260B	ND		0.50	0.18	ug/L	1
cis-1,3-Dichloropropene	10061-01-5	8260B	ND		0.50	0.090	ug/L	1
Ethylbenzene	100-41-4	8260B	ND		0.50	0.17	ug/L	1
2-Hexanone	591-78-6	8260B	ND		10	0.27	ug/L	1
Isopropylbenzene	98-82-8	8260B	ND		0.50	0.029	ug/L	1
Methyl acetate	79-20-9	8260B	ND		1.0	0.30	ug/L	1
Methyl tertiary butyl ether (MTBE)	1634-04-4	8260B	ND		0.50	0.019	ug/L	1
4-Methyl-2-pentanone	108-10-1	8260B	ND		10	0.31	ug/L	1
Methylcyclohexane	108-87-2	8260B	ND		5.0	0.95	ug/L	1
Methylene chloride	75-09-2	8260B	ND		0.50	0.17	ug/L	1
Styrene	100-42-5	8260B	ND		0.50	0.015	ug/L	1
1,1,2,2-Tetrachloroethane	79-34-5	8260B	ND		0.50	0.013	ug/L	1
Tetrachloroethene	127-18-4	8260B	ND		0.50	0.014	ug/L	1
Toluene	108-88-3	8260B	ND		0.50	0.17	ug/L	1
1,1,2-Trichloro-1,2,2-Trifluoroethane	76-13-1	8260B	ND		0.50	0.30	ug/L	1
1,2,4-Trichlorobenzene	120-82-1	8260B	ND		0.50	0.17	ug/L	1
1,1,1-Trichloroethane	71-55-6	8260B	ND		0.50	0.029	ug/L	1
1,1,2-Trichloroethane	79-00-5	8260B	ND		0.50	0.031	ug/L	1

PQL = Practical quantitation limit
B = Detected in the method blank
E = Quantitation of compound exceeded the calibration range
ND = Not detected at or above the MDL
J = Estimated result < PQL and ≥ MDL
P = The RPD between two GC columns exceeds 40%
Where applicable, all soil sample analysis are reported on a dry weight basis unless flagged with a "W"
N = Recovery is out of criteria
H = Out of holding time

Volatile Organic Compounds by GC/MS

Client: ARCADIS U.S., Inc.
Laboratory ID: LK05005-010
Description: Trip Blank
Matrix: Aqueous
Date Sampled: 11/05/2010 0900
Date Received: 11/05/2010

Run	Prep Method	Analytical Method	Dilution	Analysis Date	Analyst	Prep Date	Batch
1	5030B	8260B	1	11/05/2010 1440	DLB		45932

Parameter	CAS Number	Analytical Method	Result	Q	PQL	MDL	Units	Run
Trichloroethene	79-01-6	8260B	ND		0.50	0.024	ug/L	1
Trichlorofluoromethane	75-69-4	8260B	ND		0.50	0.051	ug/L	1
Vinyl chloride	75-01-4	8260B	ND		0.50	0.065	ug/L	1
Xylenes (total)	1330-20-7	8260B	ND		0.50	0.17	ug/L	1

Surrogate	Q	Run 1 % Recovery	Acceptance Limits
1,2-Dichloroethane-d4		98	70-130
Bromofluorobenzene		91	70-130
Toluene-d8		103	70-130

PQL = Practical quantitation limit
B = Detected in the method blank
E = Quantitation of compound exceeded the calibration range
ND = Not detected at or above the MDL
J = Estimated result < PQL and ≥ MDL
P = The RPD between two GC columns exceeds 40%
Where applicable, all soil sample analysis are reported on a dry weight basis unless flagged with a "W"
N = Recovery is out of criteria
H = Out of holding time

QC Summary

Volatile Organic Compounds by GC/MS - MB

Sample ID: LQ45932-001
Batch: 45932
Analytical Method: 8260B

Matrix: Aqueous
Prep Method: 5030B

Parameter	Result	Q	Dil	PQL	MDL	Units	Analysis Date
Acetone	ND		1	10	3.3	ug/L	11/05/2010 1258
Benzene	ND		1	0.50	0.027	ug/L	11/05/2010 1258
Bromodichloromethane	ND		1	0.50	0.17	ug/L	11/05/2010 1258
Bromoform	ND		1	0.50	0.010	ug/L	11/05/2010 1258
Bromomethane (Methyl bromide)	ND		1	0.50	0.20	ug/L	11/05/2010 1258
2-Butanone (MEK)	ND		1	10	2.0	ug/L	11/05/2010 1258
Carbon disulfide	ND		1	0.50	0.097	ug/L	11/05/2010 1258
Carbon tetrachloride	ND		1	0.50	0.085	ug/L	11/05/2010 1258
Chlorobenzene	ND		1	0.50	0.17	ug/L	11/05/2010 1258
Chloroethane	ND		1	0.50	0.17	ug/L	11/05/2010 1258
Chloroform	ND		1	0.50	0.17	ug/L	11/05/2010 1258
Chloromethane (Methyl chloride)	ND		1	0.50	0.17	ug/L	11/05/2010 1258
Cyclohexane	ND		1	0.50	0.30	ug/L	11/05/2010 1258
1,2-Dibromo-3-chloropropane (DBCP)	ND		1	0.50	0.069	ug/L	11/05/2010 1258
Dibromochloromethane	ND		1	0.50	0.17	ug/L	11/05/2010 1258
1,2-Dibromoethane (EDB)	ND		1	0.50	0.061	ug/L	11/05/2010 1258
1,4-Dichlorobenzene	ND		1	0.50	0.17	ug/L	11/05/2010 1258
1,2-Dichlorobenzene	ND		1	0.50	0.17	ug/L	11/05/2010 1258
1,3-Dichlorobenzene	ND		1	0.50	0.17	ug/L	11/05/2010 1258
Dichlorodifluoromethane	ND		1	0.50	0.071	ug/L	11/05/2010 1258
1,2-Dichloroethane	ND		1	0.50	0.023	ug/L	11/05/2010 1258
1,1-Dichloroethane	ND		1	0.50	0.054	ug/L	11/05/2010 1258
cis-1,2-Dichloroethene	ND		1	0.50	0.087	ug/L	11/05/2010 1258
trans-1,2-Dichloroethene	ND		1	0.50	0.079	ug/L	11/05/2010 1258
1,1-Dichloroethene	ND		1	0.50	0.094	ug/L	11/05/2010 1258
1,2-Dichloropropane	ND		1	0.50	0.081	ug/L	11/05/2010 1258
cis-1,3-Dichloropropene	ND		1	0.50	0.090	ug/L	11/05/2010 1258
trans-1,3-Dichloropropene	ND		1	0.50	0.18	ug/L	11/05/2010 1258
Ethylbenzene	ND		1	0.50	0.17	ug/L	11/05/2010 1258
2-Hexanone	ND		1	10	0.27	ug/L	11/05/2010 1258
Isopropylbenzene	ND		1	0.50	0.029	ug/L	11/05/2010 1258
Methyl acetate	ND		1	1.0	0.30	ug/L	11/05/2010 1258
Methyl tertiary butyl ether (MTBE)	ND		1	0.50	0.019	ug/L	11/05/2010 1258
4-Methyl-2-pentanone	ND		1	10	0.31	ug/L	11/05/2010 1258
Methylcyclohexane	ND		1	5.0	0.95	ug/L	11/05/2010 1258
Methylene chloride	ND		1	0.50	0.17	ug/L	11/05/2010 1258
Styrene	ND		1	0.50	0.015	ug/L	11/05/2010 1258
1,1,2,2-Tetrachloroethane	ND		1	0.50	0.013	ug/L	11/05/2010 1258
Tetrachloroethene	ND		1	0.50	0.014	ug/L	11/05/2010 1258
Toluene	ND		1	0.50	0.17	ug/L	11/05/2010 1258
1,1,2-Trichloro-1,2,2-Trifluoroethane	ND		1	0.50	0.30	ug/L	11/05/2010 1258
1,2,4-Trichlorobenzene	ND		1	0.50	0.17	ug/L	11/05/2010 1258
1,1,2-Trichloroethane	ND		1	0.50	0.031	ug/L	11/05/2010 1258
1,1,1-Trichloroethane	ND		1	0.50	0.029	ug/L	11/05/2010 1258

PQL = Practical quantitation limit
ND = Not detected at or above the MDL
P = The RPD between two GC columns exceeds 40%
J = Estimated result < PQL and ≥ MDL
N - Recovery is out of criteria
+ - RPD is out of criteria

Where applicable, all soil sample analysis are reported on a dry weight basis unless flagged with a "W"

Note: Calculations are performed before rounding to avoid round-off errors in calculated results

Volatile Organic Compounds by GC/MS - MB

Sample ID: LQ45932-001
Batch: 45932
Analytical Method: 8260B

Matrix: Aqueous
Prep Method: 5030B

Parameter	Result	Q	Dil	PQL	MDL	Units	Analysis Date
Trichloroethene	ND		1	0.50	0.024	ug/L	11/05/2010 1258
Trichlorofluoromethane	ND		1	0.50	0.051	ug/L	11/05/2010 1258
Vinyl chloride	ND		1	0.50	0.065	ug/L	11/05/2010 1258
Xylenes (total)	ND		1	0.50	0.17	ug/L	11/05/2010 1258

Surrogate	Q	% Rec	Acceptance Limit
Bromofluorobenzene		94	70-130
1,2-Dichloroethane-d4		97	70-130
Toluene-d8		102	70-130

PQL = Practical quantitation limit
ND = Not detected at or above the MDL
P = The RPD between two GC columns exceeds 40%
J = Estimated result < PQL and ≥ MDL
N - Recovery is out of criteria
+ - RPD is out of criteria

Where applicable, all soil sample analysis are reported on a dry weight basis unless flagged with a "W"

Note: Calculations are performed before rounding to avoid round-off errors in calculated results

Volatile Organic Compounds by GC/MS - LCS

Sample ID: LQ45932-002
Batch: 45932
Analytical Method: 8260B

Matrix: Aqueous
Prep Method: 5030B

Parameter	Spike Amount (ug/L)	Result (ug/L)	Q	Dil	% Rec	% Rec Limit	Analysis Date
Acetone	100	130		1	125	46-153	11/05/2010 1131
Benzene	50	56		1	112	70-130	11/05/2010 1131
Bromodichloromethane	50	59		1	118	70-130	11/05/2010 1131
Bromoform	50	55		1	111	70-130	11/05/2010 1131
Bromomethane (Methyl bromide)	50	58		1	117	60-140	11/05/2010 1131
2-Butanone (MEK)	100	130		1	130	60-140	11/05/2010 1131
Carbon disulfide	50	49		1	99	60-140	11/05/2010 1131
Carbon tetrachloride	50	53		1	105	70-130	11/05/2010 1131
Chlorobenzene	50	55		1	109	70-130	11/05/2010 1131
Chloroethane	50	53		1	106	42-163	11/05/2010 1131
Chloroform	50	55		1	111	70-130	11/05/2010 1131
Chloromethane (Methyl chloride)	50	51		1	102	20-158	11/05/2010 1131
Cyclohexane	50	51		1	102	70-130	11/05/2010 1131
1,2-Dibromo-3-chloropropane (DBCP)	50	60		1	119	70-130	11/05/2010 1131
Dibromochloromethane	50	64		1	127	70-130	11/05/2010 1131
1,2-Dibromoethane (EDB)	50	59		1	119	70-130	11/05/2010 1131
1,4-Dichlorobenzene	50	53		1	106	70-130	11/05/2010 1131
1,2-Dichlorobenzene	50	55		1	110	70-130	11/05/2010 1131
1,3-Dichlorobenzene	50	54		1	108	70-130	11/05/2010 1131
Dichlorodifluoromethane	50	47		1	94	60-140	11/05/2010 1131
1,2-Dichloroethane	50	57		1	114	70-130	11/05/2010 1131
1,1-Dichloroethane	50	56		1	111	70-130	11/05/2010 1131
cis-1,2-Dichloroethene	50	55		1	110	70-130	11/05/2010 1131
trans-1,2-Dichloroethene	50	54		1	108	70-130	11/05/2010 1131
1,1-Dichloroethene	50	52		1	104	70-130	11/05/2010 1131
1,2-Dichloropropane	50	58		1	116	70-130	11/05/2010 1131
cis-1,3-Dichloropropene	50	58		1	117	70-130	11/05/2010 1131
trans-1,3-Dichloropropene	50	59		1	118	70-130	11/05/2010 1131
Ethylbenzene	50	55		1	110	70-130	11/05/2010 1131
2-Hexanone	100	120		1	124	60-140	11/05/2010 1131
Isopropylbenzene	50	57		1	113	70-130	11/05/2010 1131
Methyl acetate	50	67	N	1	133	15-128	11/05/2010 1131
Methyl tertiary butyl ether (MTBE)	50	59		1	117	70-130	11/05/2010 1131
4-Methyl-2-pentanone	100	130		1	126	60-140	11/05/2010 1131
Methylcyclohexane	50	52		1	105	70-130	11/05/2010 1131
Methylene chloride	50	54		1	108	70-130	11/05/2010 1131
Styrene	50	62		1	124	70-130	11/05/2010 1131
1,1,2,2-Tetrachloroethane	50	63		1	125	70-130	11/05/2010 1131
Tetrachloroethene	50	52		1	105	70-130	11/05/2010 1131
Toluene	50	55		1	111	70-130	11/05/2010 1131
1,1,2-Trichloro-1,2,2-Trifluoroethane	50	49		1	99	70-130	11/05/2010 1131
1,2,4-Trichlorobenzene	50	55		1	110	70-130	11/05/2010 1131
1,1,2-Trichloroethane	50	57		1	114	70-130	11/05/2010 1131
1,1,1-Trichloroethane	50	53		1	107	70-130	11/05/2010 1131

PQL = Practical quantitation limit
ND = Not detected at or above the MDL
P = The RPD between two GC columns exceeds 40%
J = Estimated result < PQL and ≥ MDL
N - Recovery is out of criteria
+ - RPD is out of criteria

Where applicable, all soil sample analysis are reported on a dry weight basis unless flagged with a "W"

Note: Calculations are performed before rounding to avoid round-off errors in calculated results

Volatile Organic Compounds by GC/MS - LCS

Sample ID: LQ45932-002
Batch: 45932
Analytical Method: 8260B

Matrix: Aqueous
Prep Method: 5030B

Parameter	Spike Amount (ug/L)	Result (ug/L)	Q	Dil	% Rec	% Rec Limit	Analysis Date
Trichloroethene	50	55		1	110	70-130	11/05/2010 1131
Trichlorofluoromethane	50	49		1	99	60-140	11/05/2010 1131
Vinyl chloride	50	53		1	105	60-140	11/05/2010 1131
Xylenes (total)	100	110		1	113	70-130	11/05/2010 1131

Surrogate	Q	% Rec	Acceptance Limit
Bromofluorobenzene		95	70-130
1,2-Dichloroethane-d4		98	70-130
Toluene-d8		106	70-130

PQL = Practical quantitation limit
ND = Not detected at or above the MDL
P = The RPD between two GC columns exceeds 40%
J = Estimated result < PQL and ≥ MDL
N - Recovery is out of criteria
+ - RPD is out of criteria

Where applicable, all soil sample analysis are reported on a dry weight basis unless flagged with a "W"

Note: Calculations are performed before rounding to avoid round-off errors in calculated results

Volatile Organic Compounds by GC/MS - LCSD

Sample ID: LQ45932-003
Batch: 45932
Analytical Method: 8260B

Matrix: Aqueous
Prep Method: 5030B

Parameter	Spike Amount (ug/L)	Result (ug/L)	Q	Dil	% Rec	% RPD	% Rec Limit	% RPD Limit	Analysis Date
Acetone	100	100		1	102	20	46-153	20	11/05/2010 1153
Benzene	50	50		1	100	11	70-130	20	11/05/2010 1153
Bromodichloromethane	50	53		1	106	11	70-130	20	11/05/2010 1153
Bromoform	50	48		1	96	14	70-130	20	11/05/2010 1153
Bromomethane (Methyl bromide)	50	45	+	1	90	26	60-140	20	11/05/2010 1153
2-Butanone (MEK)	100	110		1	106	20	60-140	20	11/05/2010 1153
Carbon disulfide	50	43		1	87	13	60-140	20	11/05/2010 1153
Carbon tetrachloride	50	47		1	95	10	70-130	20	11/05/2010 1153
Chlorobenzene	50	49		1	98	10	70-130	20	11/05/2010 1153
Chloroethane	50	45		1	91	16	42-163	20	11/05/2010 1153
Chloroform	50	49		1	98	12	70-130	20	11/05/2010 1153
Chloromethane (Methyl chloride)	50	44		1	89	14	20-158	20	11/05/2010 1153
Cyclohexane	50	46		1	91	12	70-130	20	11/05/2010 1153
1,2-Dibromo-3-chloropropane (DBCP)	50	51		1	103	15	70-130	20	11/05/2010 1153
Dibromochloromethane	50	57		1	113	11	70-130	20	11/05/2010 1153
1,2-Dibromoethane (EDB)	50	51		1	103	15	70-130	20	11/05/2010 1153
1,4-Dichlorobenzene	50	49		1	98	7.9	70-130	20	11/05/2010 1153
1,2-Dichlorobenzene	50	51		1	102	8.1	70-130	20	11/05/2010 1153
1,3-Dichlorobenzene	50	49		1	99	8.6	70-130	20	11/05/2010 1153
Dichlorodifluoromethane	50	40		1	81	15	60-140	20	11/05/2010 1153
1,2-Dichloroethane	50	50		1	100	13	70-130	20	11/05/2010 1153
1,1-Dichloroethane	50	49		1	97	13	70-130	20	11/05/2010 1153
cis-1,2-Dichloroethene	50	49		1	98	12	70-130	20	11/05/2010 1153
trans-1,2-Dichloroethene	50	48		1	96	11	70-130	20	11/05/2010 1153
1,1-Dichloroethene	50	45		1	91	13	70-130	20	11/05/2010 1153
1,2-Dichloropropane	50	50		1	100	14	70-130	20	11/05/2010 1153
cis-1,3-Dichloropropene	50	52		1	104	12	70-130	20	11/05/2010 1153
trans-1,3-Dichloropropene	50	52		1	103	13	70-130	20	11/05/2010 1153
Ethylbenzene	50	50		1	99	10	70-130	20	11/05/2010 1153
2-Hexanone	100	110		1	105	16	60-140	20	11/05/2010 1153
Isopropylbenzene	50	52		1	105	7.6	70-130	20	11/05/2010 1153
Methyl acetate	50	54	+	1	108	22	15-128	20	11/05/2010 1153
Methyl tertiary butyl ether (MTBE)	50	51		1	101	14	70-130	20	11/05/2010 1153
4-Methyl-2-pentanone	100	110		1	106	18	60-140	20	11/05/2010 1153
Methylcyclohexane	50	47		1	95	10	70-130	20	11/05/2010 1153
Methylene chloride	50	47		1	95	13	70-130	20	11/05/2010 1153
Styrene	50	56		1	112	10	70-130	20	11/05/2010 1153
1,1,2,2-Tetrachloroethane	50	55		1	109	13	70-130	20	11/05/2010 1153
Tetrachloroethene	50	47		1	95	10	70-130	20	11/05/2010 1153
Toluene	50	50		1	100	10	70-130	20	11/05/2010 1153
1,1,2-Trichloro-1,2,2-Trifluoroethane	50	44		1	88	11	70-130	20	11/05/2010 1153
1,2,4-Trichlorobenzene	50	51		1	101	8.4	70-130	20	11/05/2010 1153
1,1,2-Trichloroethane	50	50		1	101	12	70-130	20	11/05/2010 1153
1,1,1-Trichloroethane	50	49		1	97	9.2	70-130	20	11/05/2010 1153

PQL = Practical quantitation limit
ND = Not detected at or above the MDL
P = The RPD between two GC columns exceeds 40%
J = Estimated result < PQL and ≥ MDL
N - Recovery is out of criteria
+ - RPD is out of criteria

Where applicable, all soil sample analysis are reported on a dry weight basis unless flagged with a "W"

Note: Calculations are performed before rounding to avoid round-off errors in calculated results

Volatile Organic Compounds by GC/MS - LCSD

Sample ID: LQ45932-003
Batch: 45932
Analytical Method: 8260B

Matrix: Aqueous
Prep Method: 5030B

Parameter	Spike Amount (ug/L)	Result (ug/L)	Q	Dil	% Rec	% RPD	% Rec Limit	% RPD Limit	Analysis Date
Trichloroethene	50	49		1	98	11	70-130	20	11/05/2010 1153
Trichlorofluoromethane	50	44		1	87	12	60-140	20	11/05/2010 1153
Vinyl chloride	50	43	+	1	85	21	60-140	20	11/05/2010 1153
Xylenes (total)	100	100		1	102	10	70-130	20	11/05/2010 1153

Surrogate	Q	% Rec	Acceptance Limit
Bromofluorobenzene		96	70-130
1,2-Dichloroethane-d4		95	70-130
Toluene-d8		105	70-130

PQL = Practical quantitation limit
ND = Not detected at or above the MDL
P = The RPD between two GC columns exceeds 40%
J = Estimated result < PQL and ≥ MDL
N - Recovery is out of criteria
+ - RPD is out of criteria

Where applicable, all soil sample analysis are reported on a dry weight basis unless flagged with a "W"

Note: Calculations are performed before rounding to avoid round-off errors in calculated results

Volatile Organic Compounds by GC/MS - MB

Sample ID: LQ46044-001
Batch: 46044
Analytical Method: 8260B

Matrix: Aqueous
Prep Method: 5030B

Parameter	Result	Q	Dil	PQL	MDL	Units	Analysis Date
Acetone	ND		1	10	3.3	ug/L	11/05/2010 2235
Benzene	ND		1	0.50	0.027	ug/L	11/05/2010 2235
Bromodichloromethane	ND		1	0.50	0.17	ug/L	11/05/2010 2235
Bromoform	ND		1	0.50	0.010	ug/L	11/05/2010 2235
Bromomethane (Methyl bromide)	ND		1	0.50	0.20	ug/L	11/05/2010 2235
2-Butanone (MEK)	ND		1	10	2.0	ug/L	11/05/2010 2235
Carbon disulfide	ND		1	0.50	0.097	ug/L	11/05/2010 2235
Carbon tetrachloride	ND		1	0.50	0.085	ug/L	11/05/2010 2235
Chlorobenzene	ND		1	0.50	0.17	ug/L	11/05/2010 2235
Chloroethane	ND		1	0.50	0.17	ug/L	11/05/2010 2235
Chloroform	ND		1	0.50	0.17	ug/L	11/05/2010 2235
Chloromethane (Methyl chloride)	ND		1	0.50	0.17	ug/L	11/05/2010 2235
Cyclohexane	ND		1	0.50	0.30	ug/L	11/05/2010 2235
1,2-Dibromo-3-chloropropane (DBCP)	ND		1	0.50	0.069	ug/L	11/05/2010 2235
Dibromochloromethane	ND		1	0.50	0.17	ug/L	11/05/2010 2235
1,2-Dibromoethane (EDB)	ND		1	0.50	0.061	ug/L	11/05/2010 2235
1,4-Dichlorobenzene	ND		1	0.50	0.17	ug/L	11/05/2010 2235
1,2-Dichlorobenzene	ND		1	0.50	0.17	ug/L	11/05/2010 2235
1,3-Dichlorobenzene	ND		1	0.50	0.17	ug/L	11/05/2010 2235
Dichlorodifluoromethane	ND		1	0.50	0.071	ug/L	11/05/2010 2235
1,2-Dichloroethane	ND		1	0.50	0.023	ug/L	11/05/2010 2235
1,1-Dichloroethane	ND		1	0.50	0.054	ug/L	11/05/2010 2235
cis-1,2-Dichloroethene	ND		1	0.50	0.087	ug/L	11/05/2010 2235
1,1-Dichloroethene	ND		1	0.50	0.094	ug/L	11/05/2010 2235
trans-1,2-Dichloroethene	ND		1	0.50	0.079	ug/L	11/05/2010 2235
1,2-Dichloropropane	ND		1	0.50	0.081	ug/L	11/05/2010 2235
cis-1,3-Dichloropropene	ND		1	0.50	0.090	ug/L	11/05/2010 2235
trans-1,3-Dichloropropene	ND		1	0.50	0.18	ug/L	11/05/2010 2235
Ethylbenzene	ND		1	0.50	0.17	ug/L	11/05/2010 2235
2-Hexanone	ND		1	10	0.27	ug/L	11/05/2010 2235
Isopropylbenzene	ND		1	0.50	0.029	ug/L	11/05/2010 2235
Methyl acetate	ND		1	1.0	0.30	ug/L	11/05/2010 2235
Methyl tertiary butyl ether (MTBE)	ND		1	0.50	0.019	ug/L	11/05/2010 2235
4-Methyl-2-pentanone	ND		1	10	0.31	ug/L	11/05/2010 2235
Methylcyclohexane	ND		1	5.0	0.95	ug/L	11/05/2010 2235
Methylene chloride	ND		1	0.50	0.17	ug/L	11/05/2010 2235
Styrene	ND		1	0.50	0.015	ug/L	11/05/2010 2235
1,1,2,2-Tetrachloroethane	ND		1	0.50	0.013	ug/L	11/05/2010 2235
Tetrachloroethene	ND		1	0.50	0.014	ug/L	11/05/2010 2235
Toluene	ND		1	0.50	0.17	ug/L	11/05/2010 2235
1,1,2-Trichloro-1,2,2-Trifluoroethane	ND		1	0.50	0.30	ug/L	11/05/2010 2235
1,2,4-Trichlorobenzene	ND		1	0.50	0.17	ug/L	11/05/2010 2235
1,1,2-Trichloroethane	ND		1	0.50	0.031	ug/L	11/05/2010 2235
1,1,1-Trichloroethane	ND		1	0.50	0.029	ug/L	11/05/2010 2235

PQL = Practical quantitation limit
ND = Not detected at or above the MDL
P = The RPD between two GC columns exceeds 40%
J = Estimated result < PQL and ≥ MDL
N - Recovery is out of criteria
+ - RPD is out of criteria

Where applicable, all soil sample analysis are reported on a dry weight basis unless flagged with a "W"

Note: Calculations are performed before rounding to avoid round-off errors in calculated results

Volatile Organic Compounds by GC/MS - MB

Sample ID: LQ46044-001
Batch: 46044
Analytical Method: 8260B

Matrix: Aqueous
Prep Method: 5030B

Parameter	Result	Q	Dil	PQL	MDL	Units	Analysis Date
Trichloroethene	ND		1	0.50	0.024	ug/L	11/05/2010 2235
Trichlorofluoromethane	ND		1	0.50	0.051	ug/L	11/05/2010 2235
Vinyl chloride	ND		1	0.50	0.065	ug/L	11/05/2010 2235
Xylenes (total)	ND		1	0.50	0.17	ug/L	11/05/2010 2235

Surrogate	Q	% Rec	Acceptance Limit
Bromofluorobenzene		102	70-130
1,2-Dichloroethane-d4		95	70-130
Toluene-d8		110	70-130

PQL = Practical quantitation limit
ND = Not detected at or above the MDL
P = The RPD between two GC columns exceeds 40%
J = Estimated result < PQL and ≥ MDL
N - Recovery is out of criteria
+ - RPD is out of criteria

Where applicable, all soil sample analysis are reported on a dry weight basis unless flagged with a "W"

Note: Calculations are performed before rounding to avoid round-off errors in calculated results

Volatile Organic Compounds by GC/MS - LCS

Sample ID: LQ46044-002
Batch: 46044
Analytical Method: 8260B

Matrix: Aqueous
Prep Method: 5030B

Parameter	Spike Amount (ug/L)	Result (ug/L)	Q	Dil	% Rec	% Rec Limit	Analysis Date
Acetone	100	83		1	83	46-153	11/05/2010 2125
Benzene	50	52		1	104	70-130	11/05/2010 2125
Bromodichloromethane	50	48		1	97	70-130	11/05/2010 2125
Bromoform	50	51		1	102	70-130	11/05/2010 2125
Bromomethane (Methyl bromide)	50	60		1	120	60-140	11/05/2010 2125
2-Butanone (MEK)	100	97		1	97	60-140	11/05/2010 2125
Carbon disulfide	50	39		1	79	60-140	11/05/2010 2125
Carbon tetrachloride	50	46		1	91	70-130	11/05/2010 2125
Chlorobenzene	50	51		1	101	70-130	11/05/2010 2125
Chloroethane	50	61		1	122	42-163	11/05/2010 2125
Chloroform	50	44		1	88	70-130	11/05/2010 2125
Chloromethane (Methyl chloride)	50	63		1	125	20-158	11/05/2010 2125
Cyclohexane	50	44		1	87	70-130	11/05/2010 2125
1,2-Dibromo-3-chloropropane (DBCP)	50	48		1	96	70-130	11/05/2010 2125
Dibromochloromethane	50	52		1	105	70-130	11/05/2010 2125
1,2-Dibromoethane (EDB)	50	52		1	105	70-130	11/05/2010 2125
1,4-Dichlorobenzene	50	53		1	106	70-130	11/05/2010 2125
1,2-Dichlorobenzene	50	54		1	108	70-130	11/05/2010 2125
1,3-Dichlorobenzene	50	52		1	103	70-130	11/05/2010 2125
Dichlorodifluoromethane	50	64		1	127	60-140	11/05/2010 2125
1,2-Dichloroethane	50	44		1	87	70-130	11/05/2010 2125
1,1-Dichloroethane	50	44		1	87	70-130	11/05/2010 2125
cis-1,2-Dichloroethene	50	46		1	92	70-130	11/05/2010 2125
1,1-Dichloroethene	50	41		1	82	70-130	11/05/2010 2125
trans-1,2-Dichloroethene	50	44		1	88	70-130	11/05/2010 2125
1,2-Dichloropropane	50	50		1	100	70-130	11/05/2010 2125
cis-1,3-Dichloropropene	50	42		1	85	70-130	11/05/2010 2125
trans-1,3-Dichloropropene	50	53		1	105	70-130	11/05/2010 2125
Ethylbenzene	50	53		1	106	70-130	11/05/2010 2125
2-Hexanone	100	99		1	99	60-140	11/05/2010 2125
Isopropylbenzene	50	55		1	110	70-130	11/05/2010 2125
Methyl acetate	50	42		1	84	15-128	11/05/2010 2125
Methyl tertiary butyl ether (MTBE)	50	41		1	82	70-130	11/05/2010 2125
4-Methyl-2-pentanone	100	80		1	80	60-140	11/05/2010 2125
Methylcyclohexane	50	51		1	103	70-130	11/05/2010 2125
Methylene chloride	50	37		1	73	70-130	11/05/2010 2125
Styrene	50	51		1	101	70-130	11/05/2010 2125
1,1,2,2-Tetrachloroethane	50	52		1	104	70-130	11/05/2010 2125
Tetrachloroethene	50	51		1	102	70-130	11/05/2010 2125
Toluene	50	54		1	107	70-130	11/05/2010 2125
1,1,2-Trichloro-1,2,2-Trifluoroethane	50	44		1	89	70-130	11/05/2010 2125
1,2,4-Trichlorobenzene	50	56		1	112	70-130	11/05/2010 2125
1,1,2-Trichloroethane	50	49		1	98	70-130	11/05/2010 2125
1,1,1-Trichloroethane	50	46		1	92	70-130	11/05/2010 2125

PQL = Practical quantitation limit
ND = Not detected at or above the MDL
P = The RPD between two GC columns exceeds 40%
J = Estimated result < PQL and ≥ MDL
N - Recovery is out of criteria
+ - RPD is out of criteria

Where applicable, all soil sample analysis are reported on a dry weight basis unless flagged with a "W"

Note: Calculations are performed before rounding to avoid round-off errors in calculated results

Volatile Organic Compounds by GC/MS - LCS

Sample ID: LQ46044-002
Batch: 46044
Analytical Method: 8260B

Matrix: Aqueous
Prep Method: 5030B

Parameter	Spike Amount (ug/L)	Result (ug/L)	Q	Dil	% Rec	% Rec Limit	Analysis Date
Trichloroethene	50	46		1	91	70-130	11/05/2010 2125
Trichlorofluoromethane	50	49		1	98	60-140	11/05/2010 2125
Vinyl chloride	50	60		1	119	60-140	11/05/2010 2125
Xylenes (total)	100	110		1	107	70-130	11/05/2010 2125

Surrogate	Q	% Rec	Acceptance Limit
Bromofluorobenzene		110	70-130
1,2-Dichloroethane-d4		98	70-130
Toluene-d8		114	70-130

PQL = Practical quantitation limit
ND = Not detected at or above the MDL
P = The RPD between two GC columns exceeds 40%
J = Estimated result < PQL and ≥ MDL
N - Recovery is out of criteria
+ - RPD is out of criteria

Where applicable, all soil sample analysis are reported on a dry weight basis unless flagged with a "W"

Note: Calculations are performed before rounding to avoid round-off errors in calculated results

Volatile Organic Compounds by GC/MS - LCSD

Sample ID: LQ46044-003
Batch: 46044
Analytical Method: 8260B

Matrix: Aqueous
Prep Method: 5030B

Parameter	Spike Amount (ug/L)	Result (ug/L)	Q	Dil	% Rec	% RPD	% Rec Limit	% RPD Limit	Analysis Date
Acetone	100	86		1	86	4.2	46-153	20	11/05/2010 2148
Benzene	50	52		1	103	0.67	70-130	20	11/05/2010 2148
Bromodichloromethane	50	44		1	89	8.9	70-130	20	11/05/2010 2148
Bromoform	50	52		1	105	2.6	70-130	20	11/05/2010 2148
Bromomethane (Methyl bromide)	50	60		1	120	0.16	60-140	20	11/05/2010 2148
2-Butanone (MEK)	100	100		1	101	4.3	60-140	20	11/05/2010 2148
Carbon disulfide	50	41		1	82	4.4	60-140	20	11/05/2010 2148
Carbon tetrachloride	50	47		1	94	2.9	70-130	20	11/05/2010 2148
Chlorobenzene	50	50		1	100	1.5	70-130	20	11/05/2010 2148
Chloroethane	50	58		1	117	4.3	42-163	20	11/05/2010 2148
Chloroform	50	46		1	91	3.5	70-130	20	11/05/2010 2148
Chloromethane (Methyl chloride)	50	60		1	121	3.8	20-158	20	11/05/2010 2148
Cyclohexane	50	46		1	92	5.9	70-130	20	11/05/2010 2148
1,2-Dibromo-3-chloropropane (DBCP)	50	47		1	94	2.6	70-130	20	11/05/2010 2148
Dibromochloromethane	50	54		1	108	3.5	70-130	20	11/05/2010 2148
1,2-Dibromoethane (EDB)	50	51		1	103	1.7	70-130	20	11/05/2010 2148
1,4-Dichlorobenzene	50	53		1	105	1.2	70-130	20	11/05/2010 2148
1,2-Dichlorobenzene	50	54		1	107	0.49	70-130	20	11/05/2010 2148
1,3-Dichlorobenzene	50	52		1	103	0.19	70-130	20	11/05/2010 2148
Dichlorodifluoromethane	50	69		1	138	8.0	60-140	20	11/05/2010 2148
1,2-Dichloroethane	50	45		1	90	2.8	70-130	20	11/05/2010 2148
1,1-Dichloroethane	50	46		1	93	6.1	70-130	20	11/05/2010 2148
cis-1,2-Dichloroethene	50	48		1	97	5.0	70-130	20	11/05/2010 2148
1,1-Dichloroethene	50	43		1	86	5.5	70-130	20	11/05/2010 2148
trans-1,2-Dichloroethene	50	46		1	92	5.3	70-130	20	11/05/2010 2148
1,2-Dichloropropane	50	50		1	100	0.86	70-130	20	11/05/2010 2148
cis-1,3-Dichloropropene	50	47		1	93	9.6	70-130	20	11/05/2010 2148
trans-1,3-Dichloropropene	50	53		1	106	1.1	70-130	20	11/05/2010 2148
Ethylbenzene	50	49		1	99	6.7	70-130	20	11/05/2010 2148
2-Hexanone	100	100		1	103	3.3	60-140	20	11/05/2010 2148
Isopropylbenzene	50	60		1	120	8.8	70-130	20	11/05/2010 2148
Methyl acetate	50	44		1	88	4.6	15-128	20	11/05/2010 2148
Methyl tertiary butyl ether (MTBE)	50	44		1	89	7.3	70-130	20	11/05/2010 2148
4-Methyl-2-pentanone	100	87		1	87	8.7	60-140	20	11/05/2010 2148
Methylcyclohexane	50	54		1	107	4.6	70-130	20	11/05/2010 2148
Methylene chloride	50	39		1	79	7.0	70-130	20	11/05/2010 2148
Styrene	50	52		1	104	2.8	70-130	20	11/05/2010 2148
1,1,2,2-Tetrachloroethane	50	57		1	113	8.0	70-130	20	11/05/2010 2148
Tetrachloroethene	50	51		1	102	0.48	70-130	20	11/05/2010 2148
Toluene	50	55		1	109	1.6	70-130	20	11/05/2010 2148
1,1,2-Trichloro-1,2,2-Trifluoroethane	50	46		1	92	4.0	70-130	20	11/05/2010 2148
1,2,4-Trichlorobenzene	50	56		1	112	0.10	70-130	20	11/05/2010 2148
1,1,2-Trichloroethane	50	50		1	101	2.2	70-130	20	11/05/2010 2148
1,1,1-Trichloroethane	50	46		1	93	1.2	70-130	20	11/05/2010 2148

PQL = Practical quantitation limit
ND = Not detected at or above the MDL
P = The RPD between two GC columns exceeds 40%
J = Estimated result < PQL and ≥ MDL
N - Recovery is out of criteria
+ - RPD is out of criteria

Where applicable, all soil sample analysis are reported on a dry weight basis unless flagged with a "W"

Note: Calculations are performed before rounding to avoid round-off errors in calculated results

Volatile Organic Compounds by GC/MS - LCSD

Sample ID: LQ46044-003
Batch: 46044
Analytical Method: 8260B

Matrix: Aqueous
Prep Method: 5030B

Parameter	Spike Amount (ug/L)	Result (ug/L)	Q	Dil	% Rec	% RPD	% Rec Limit	% RPD Limit	Analysis Date
Trichloroethene	50	50		1	99	8.1	70-130	20	11/05/2010 2148
Trichlorofluoromethane	50	46		1	93	5.4	60-140	20	11/05/2010 2148
Vinyl chloride	50	57		1	114	4.3	60-140	20	11/05/2010 2148
Xylenes (total)	100	110		1	107	0.47	70-130	20	11/05/2010 2148

Surrogate	Q	% Rec	Acceptance Limit
Bromofluorobenzene		111	70-130
1,2-Dichloroethane-d4		97	70-130
Toluene-d8		115	70-130

PQL = Practical quantitation limit
ND = Not detected at or above the MDL
P = The RPD between two GC columns exceeds 40%
J = Estimated result < PQL and ≥ MDL
N - Recovery is out of criteria
+ - RPD is out of criteria

Where applicable, all soil sample analysis are reported on a dry weight basis unless flagged with a "W"

Note: Calculations are performed before rounding to avoid round-off errors in calculated results

SHEALY ENVIRONMENTAL SERVICES, INC.

SHEALY Chain of Custody Record

SHEALY ENVIRONMENTAL SERVICES, INC.
106 Vantage Point Drive
West Columbia, South Carolina 29172
Telephone No. (803) 791-9700 Fax No. (803) 791-9111

Number 107608

Client: ARCADIS	Report to Contact: SHELLEY GIBBONS	Telephone No. / Fax No. / E-mail: shelley.gibbons@arcadis-us.com 919-854-1292/919-854-5448	Quote No.
Address: 801 Corporate Center Drive Suite 300	Sampler's Signature: CB Lawson	Waybill No.: FED-EX 8730 0304 5506	Page ___ of ___
City: RALEIGH State: NC Zip Code: 27607	Printed Name: Charles Lawson	Analysis (Attach list if more space is needed.)	
Project Name: FORT STEWART FST-39			
Project No.: GP09 HAFS, F39A, DG0FJ	P.O. No.		Lot No.: LK05605

Sample ID / Description (Containers for each sample may be combined on one line.)	Date	Time	G=Grab C=Composite	Matrix: Aqueous	Solid	Non-Aqueous	No. of Containers by Preservative Type: Unpres.	H2SO4	HNO3	HCl	NaOH	SDS Kit	8260B VOC	Remarks / Cooler I.D.
D-30 (30-34')	11/3/2010	17:10	G	X						3			X	
D-30 (36-40')	11/3/2010	17:14	G	X						3			X	
D-30 (42-46')	11/3/2010	18:19	G	X						3			X	
C-14 (30-34')	11/4/2010	8:56	G	X						3			X	
C-14 (36-40')	11/4/2010	9:29	G	X						3			X	
C-14 (42-46')	11/4/2010	10:00	G	X						3			X	
D-23 (30-34')	11/4/2010	11:43	G	X						3			X	
D-23 (36-40')	11/4/2010	12:23	G	X						3			X	
D-23 (42-46')	11/4/2010	13:07	G	X						3			X	
TRIP BLANK										3			X	

Possible Hazard Identification: ☒ Non-Hazard ☐ Flammable ☐ Skin Irritant ☐ Poison ☐ Unknown

Sample Disposal: ☐ Return to Client ☒ Disposal by Lab

Note: All samples are retained for six weeks from receipt unless other arrangements are made.

Turn Around Time Required (Prior lab approval required for expedited TAT.): ☐ Standard ☒ Rush (Specify) 24 HR TAT

QC Requirements (Specify):

	Date	Time		Date	Time
1. Relinquished by: CB Lawson	11/4/2010	16:00	1. Received by		
2. Relinquished by			2. Received by		
3. Relinquished by: FED EX	11/5/10	0900	3. Laboratory received by	11/5/10	0900

Comments:

LAB USE ONLY: Received on ice (Circle) (Yes) No Ice Pack

Receipt Temp. 3.1 °C

DISTRIBUTION: WHITE & YELLOW-Return to laboratory with Sample(s); PINK-Field/Client Copy

Document Number: F-AD-012 Effective Date: 08-04-02

SHEALY ENVIRONMENTAL SERVICES, INC.

Shealy Environmental Services, Inc.
Document Number: F-AD-016
Revision Number: 6

Page 1 of 1
Replaces Date: 09/22/06
Effective Date: 05/29/07

Sample Receipt Checklist (SRC)

Client: Arcadis Cooler Inspected by/date: BW / 11/5/10 Lot #: LK05005

Means of receipt: ☐ SESI ☐ Client ☐ UPS ☑ FedEx ☐ Airborne Exp ☐ Other

Yes ☑	No ☐	NA ☐	1. Were custody seals present on the cooler?
Yes ☑	No ☐	NA ☐	2. If custody seals were present, were they intact and unbroken?

Cooler ID/temperature upon receipt 5-1 °C / °C / °C / °C / °C / °C / °C / °C

Method: ☐ Temperature Blank ☑ Against Bottles
Method of coolant: ☑ Wet Ice ☐ Blue Ice ☐ Dry Ice ☐ None

If response is No (or Yes for 14, 15, 16), an explanation/resolution must be provided.

Yes ☐	No ☐	NA ☑	3. If temperature of any cooler exceeded 6.0°C, was Project Manager notified? PM notified by SRC, phone, note (circle one), other:_____. (For coolers received via commercial courier, PMs are to be notified immediately.
Yes ☑	No ☐	NA ☐	4. Is the commercial courier's packing slip attached to this form?
Yes ☐	No ☑	NA ☐	5. Were proper custody procedures (relinquished/received) followed?
Yes ☑	No ☐	NA ☐	6. Were sample IDs listed?
Yes ☑	No ☐	NA ☐	7. Was collection date & time listed?
Yes ☑	No ☐	NA ☐	8. Were tests to be performed listed on the COC or was quote # provided?
Yes ☑	No ☐	NA ☐	9. Did all samples arrive in the proper containers for each test?
Yes ☑	No ☐	NA ☐	10. Did all container label information (ID, date, time) agree with COC?
BW Yes ☑	No ☑	NA ☐	11. Did all containers arrive in good condition (unbroken, lids on, etc.)?
Yes ☑	No ☐	NA ☐	12. Was adequate sample volume available?
Yes ☑	No ☐	NA ☐	13. Were all samples received within ½ the holding time or 48 hours, whichever comes first?
Yes ☐	No ☑	NA ☐	14. Were any samples containers missing?
Yes ☐	No ☑	NA ☐	15. Were there any excess samples not listed on COC?
Yes ☑	No ☐	NA ☐	16. Were bubbles present >"pea-size" (¼"or 6mm in diameter) in any VOA vials?
Yes ☐	No ☐	NA ☑	17. Were all metals/O&G/HEM/nutrient samples received at a pH of <2?
Yes ☐	No ☐	NA ☑	18. Were all cyanide and/or sulfide samples received at a pH >12?
Yes ☐	No ☐	NA ☑	19. Were all applicable NH3/TKN/cyanide/phenol/BNA/pest/PCB/herb (<0.2mg/L) and toxicity (<0.1mg/L) samples free of residual chlorine?
Yes ☐	No ☐	NA ☑	20. Were collection temperatures documented on the COC for NC samples?

Sample Preservation (Must be completed for any sample(s) incorrectly preserved or with headspace.)

Sample(s)_____were received incorrectly preserved and were adjusted accordingly in sample receiving with _____(H_2SO_4,HNO_3,HCl,NaOH) with the SR # (number)

Sample(s) -002(2), -007(2), -009(1) were received with bubbles >6 mm in diameter.

Sample(s)_____were received with TRC >0.2 mg/L for NH3/TKN/cyanide/BNA/pest/PCB/herb.

Toxicity sample(s)_____were received with TRC > 0.1 mg/L and were analyzed by method 330.5.

This portion can be removed for Recipient's records.
FedEx Tracking Number 873003045506
Date 11/4/2010
Recipient's Name Charles Lawson Phone 706 828-4421
Company ARCADIS
Address 1450 GREENE ST STE 220 Dept./Floor/Suite/Room
City AUGUSTA State GA ZIP 30901-5201
Recipient's Billing Reference

Corrective Action taken, if necessary:
Was client notified: Yes ☐ No ☐
SESI employee:_____
Comments: -003 & -005 were received with (1) vial broken BW 11/5/10

Report of Analysis

ARCADIS U.S., Inc.
30 Patewood Drive
Suite 155
Greenville, SC 29615
Attention: Allison Fang

Project Name: Hunter Stewart FST-39

Project Number: GP08HAFS.F39A.0G0FI

Lot Number: LK04016

Date Completed: 11/09/2010

Nisreen Saikaly
Project Manager

This report shall not be reproduced, except in its entirety, without the written approval of Shealy Environmental Services, Inc.

The following non-paginated documents are considered part of this report: Chain of Custody Record and Sample Receipt Checklist.

* L K 0 4 0 1 6 *

Case Narrative
ARCADIS U.S., Inc.
Lot Number: LK04016

This Report of Analysis contains the analytical result(s) for the sample(s) listed on the Sample Summary following this Case Narrative. The sample receiving date is documented in the header information associated with each sample.

Sample receipt, sample analysis, and data review have been performed in accordance with the most current approved NELAC standards, the Shealy Environmental Services, Inc. ("Shealy") Quality Assurance Management Plan (QAMP), standard operating procedures (SOPs), and Shealy policies. Any exceptions to the NELAC standards, the QAMP, SOPs or policies are qualified on the results page or discussed below.

If you have any questions regarding this report please contact the Shealy Project Manager listed on the cover page.

Volatile Organic Compounds

Sample -001, -004 and -005 were received as aqueous samples in VOA vials that contained HCl. The samples were too muddy to be analyzed as water samples and were logged in as solids. As per client request these samples are reported.

The LCS recovery for Methyl acetate was outside method control limits in batch 45932. The LCSD results were within limits. Therefore the associated sample results were reported and no corrective action was required.

Sample Summary

ARCADIS U.S., Inc.

Lot Number: LK04016

Sample Number	Sample ID	Matrix	Date Sampled	Date Received
001	D-25 (42-46')	Aqueous	11/02/2010 1620	11/04/2010
002	C-12 (30-34')	Aqueous	11/03/2010 0801	11/04/2010
003	C-12 (36-40')	Aqueous	11/03/2010 0922	11/04/2010
004	C-12 (42-46')	Solid	11/03/2010 1025	11/04/2010
005	B-5 (30-34')	Aqueous	11/03/2010 1222	11/04/2010
006	B-5 (36-40')	Aqueous	11/03/2010 1423	11/04/2010
007	B-5 (42-46')	Aqueous	11/03/2010 1457	11/04/2010
008	Trip Blank	Aqueous	11/04/2010 0955	11/04/2010

(8 samples)

Executive Summary
ARCADIS U.S., Inc.
Lot Number: LK04016

Sample	Sample ID	Matrix	Parameter	Method	Result	Q	Units	Page
001	D-25 (42-46')	Aqueous	Acetone	8260B	20		ug/L	5
001	D-25 (42-46')	Aqueous	Benzene	8260B	0.68		ug/L	5
001	D-25 (42-46')	Aqueous	2-Butanone (MEK)	8260B	9.1	J	ug/L	5
001	D-25 (42-46')	Aqueous	trans-1,2-Dichloroethene	8260B	0.19	J	ug/L	5
001	D-25 (42-46')	Aqueous	1,1-Dichloroethene	8260B	0.18	J	ug/L	5
001	D-25 (42-46')	Aqueous	cis-1,2-Dichloroethene	8260B	15		ug/L	5
001	D-25 (42-46')	Aqueous	Tetrachloroethene	8260B	0.21	J	ug/L	5
001	D-25 (42-46')	Aqueous	Toluene	8260B	1.8	B	ug/L	5
001	D-25 (42-46')	Aqueous	Trichloroethene	8260B	6.2		ug/L	6
002	C-12 (30-34')	Aqueous	Acetone	8260B	4.5	J	ug/L	7
002	C-12 (30-34')	Aqueous	Carbon disulfide	8260B	0.47	J	ug/L	7
002	C-12 (30-34')	Aqueous	Toluene	8260B	0.19	J	ug/L	7
003	C-12 (36-40')	Aqueous	Acetone	8260B	9.1	J	ug/L	9
003	C-12 (36-40')	Aqueous	Benzene	8260B	0.24	J	ug/L	9
003	C-12 (36-40')	Aqueous	Chloromethane (Methyl chloride)	8260B	0.67		ug/L	9
003	C-12 (36-40')	Aqueous	Tetrachloroethene	8260B	0.12	J	ug/L	9
003	C-12 (36-40')	Aqueous	Toluene	8260B	0.54		ug/L	9
003	C-12 (36-40')	Aqueous	Xylenes (total)	8260B	0.55		ug/L	10
004	C-12 (42-46')	Solid	Carbon disulfide	8260B	5.0	W	ug/kg	11
004	C-12 (42-46')	Solid	1,2,4-Trichlorobenzene	8260B	1.7	BWJ	ug/kg	11
005	B-5 (30-34')	Aqueous	Carbon disulfide	8260B	0.35	J	ug/L	13
006	B-5 (36-40')	Aqueous	Benzene	8260B	0.23	J	ug/L	15
006	B-5 (36-40')	Aqueous	2-Hexanone	8260B	0.38	J	ug/L	15
006	B-5 (36-40')	Aqueous	Toluene	8260B	0.33	J	ug/L	15
007	B-5 (42-46')	Aqueous	Acetone	8260B	19		ug/L	17
007	B-5 (42-46')	Aqueous	Benzene	8260B	0.18	J	ug/L	17
007	B-5 (42-46')	Aqueous	Toluene	8260B	0.69	B	ug/L	17
008	Trip Blank	Aqueous	Acetone	8260B	3.3	J	ug/L	19
008	Trip Blank	Aqueous	Bromoform	8260B	1.3		ug/L	19

(29 detections)

Volatile Organic Compounds by GC/MS

Client: ARCADIS U.S., Inc.
Laboratory ID: LK04016-001
Description: D-25 (42-46')
Matrix: Aqueous
Date Sampled: 11/02/2010 1620
Date Received: 11/04/2010

Run	Prep Method	Analytical Method	Dilution	Analysis Date	Analyst	Prep Date	Batch
1	5030B	8260B	1	11/09/2010 0259	DLB		46137

Parameter	CAS Number	Analytical Method	Result	Q	PQL	MDL	Units	Run
Acetone	67-64-1	8260B	20		10	3.3	ug/L	1
Benzene	71-43-2	8260B	0.68		0.50	0.027	ug/L	1
Bromodichloromethane	75-27-4	8260B	ND		0.50	0.17	ug/L	1
Bromoform	75-25-2	8260B	ND		0.50	0.010	ug/L	1
Bromomethane (Methyl bromide)	74-83-9	8260B	ND		0.50	0.20	ug/L	1
2-Butanone (MEK)	78-93-3	8260B	9.1	J	10	2.0	ug/L	1
Carbon disulfide	75-15-0	8260B	ND		0.50	0.097	ug/L	1
Carbon tetrachloride	56-23-5	8260B	ND		0.50	0.085	ug/L	1
Chlorobenzene	108-90-7	8260B	ND		0.50	0.17	ug/L	1
Chloroethane	75-00-3	8260B	ND		0.50	0.17	ug/L	1
Chloroform	67-66-3	8260B	ND		0.50	0.17	ug/L	1
Chloromethane (Methyl chloride)	74-87-3	8260B	ND		0.50	0.17	ug/L	1
Cyclohexane	110-82-7	8260B	ND		0.50	0.30	ug/L	1
1,2-Dibromo-3-chloropropane (DBCP)	96-12-8	8260B	ND		0.50	0.069	ug/L	1
Dibromochloromethane	124-48-1	8260B	ND		0.50	0.17	ug/L	1
1,2-Dibromoethane (EDB)	106-93-4	8260B	ND		0.50	0.061	ug/L	1
1,3-Dichlorobenzene	541-73-1	8260B	ND		0.50	0.17	ug/L	1
1,2-Dichlorobenzene	95-50-1	8260B	ND		0.50	0.17	ug/L	1
1,4-Dichlorobenzene	106-46-7	8260B	ND		0.50	0.17	ug/L	1
Dichlorodifluoromethane	75-71-8	8260B	ND		0.50	0.071	ug/L	1
1,1-Dichloroethane	75-34-3	8260B	ND		0.50	0.054	ug/L	1
1,2-Dichloroethane	107-06-2	8260B	ND		0.50	0.023	ug/L	1
trans-1,2-Dichloroethene	156-60-5	8260B	0.19	J	0.50	0.079	ug/L	1
1,1-Dichloroethene	75-35-4	8260B	0.18	J	0.50	0.094	ug/L	1
cis-1,2-Dichloroethene	156-59-2	8260B	15		0.50	0.087	ug/L	1
1,2-Dichloropropane	78-87-5	8260B	ND		0.50	0.081	ug/L	1
trans-1,3-Dichloropropene	10061-02-6	8260B	ND		0.50	0.18	ug/L	1
cis-1,3-Dichloropropene	10061-01-5	8260B	ND		0.50	0.090	ug/L	1
Ethylbenzene	100-41-4	8260B	ND		0.50	0.17	ug/L	1
2-Hexanone	591-78-6	8260B	ND		10	0.27	ug/L	1
Isopropylbenzene	98-82-8	8260B	ND		0.50	0.029	ug/L	1
Methyl acetate	79-20-9	8260B	ND		1.0	0.30	ug/L	1
Methyl tertiary butyl ether (MTBE)	1634-04-4	8260B	ND		0.50	0.019	ug/L	1
4-Methyl-2-pentanone	108-10-1	8260B	ND		10	0.31	ug/L	1
Methylcyclohexane	108-87-2	8260B	ND		5.0	0.95	ug/L	1
Methylene chloride	75-09-2	8260B	ND		0.50	0.17	ug/L	1
Styrene	100-42-5	8260B	ND		0.50	0.015	ug/L	1
1,1,2,2-Tetrachloroethane	79-34-5	8260B	ND		0.50	0.013	ug/L	1
Tetrachloroethene	127-18-4	8260B	0.21	J	0.50	0.014	ug/L	1
Toluene	108-88-3	8260B	1.8	B	0.50	0.17	ug/L	1
1,1,2-Trichloro-1,2,2-Trifluoroethane	76-13-1	8260B	ND		0.50	0.30	ug/L	1
1,2,4-Trichlorobenzene	120-82-1	8260B	ND		0.50	0.17	ug/L	1
1,1,1-Trichloroethane	71-55-6	8260B	ND		0.50	0.029	ug/L	1
1,1,2-Trichloroethane	79-00-5	8260B	ND		0.50	0.031	ug/L	1

PQL = Practical quantitation limit
B = Detected in the method blank
E = Quantitation of compound exceeded the calibration range
ND = Not detected at or above the MDL
J = Estimated result < PQL and ≥ MDL
P = The RPD between two GC columns exceeds 40%
Where applicable, all soil sample analysis are reported on a dry weight basis unless flagged with a "W"
N = Recovery is out of criteria
H = Out of holding time

Volatile Organic Compounds by GC/MS

Client: ARCADIS U.S., Inc.
Laboratory ID: LK04016-001
Description: D-25 (42-46')
Matrix: Aqueous
Date Sampled: 11/02/2010 1620
Date Received: 11/04/2010

Run	Prep Method	Analytical Method	Dilution	Analysis Date	Analyst	Prep Date	Batch
1	5030B	8260B	1	11/09/2010 0259	DLB		46137

Parameter	CAS Number	Analytical Method	Result	Q	PQL	MDL	Units	Run
Trichloroethene	79-01-6	8260B	6.2		0.50	0.024	ug/L	1
Trichlorofluoromethane	75-69-4	8260B	ND		0.50	0.051	ug/L	1
Vinyl chloride	75-01-4	8260B	ND		0.50	0.065	ug/L	1
Xylenes (total)	1330-20-7	8260B	ND		0.50	0.17	ug/L	1

Surrogate	Q	Run 1 % Recovery	Acceptance Limits
1,2-Dichloroethane-d4		86	70-130
Bromofluorobenzene		90	70-130
Toluene-d8		119	70-130

PQL = Practical quantitation limit
B = Detected in the method blank
E = Quantitation of compound exceeded the calibration range
ND = Not detected at or above the MDL
J = Estimated result < PQL and ≥ MDL
P = The RPD between two GC columns exceeds 40%
Where applicable, all soil sample analysis are reported on a dry weight basis unless flagged with a "W"
N = Recovery is out of criteria
H = Out of holding time

Volatile Organic Compounds by GC/MS

Client: ARCADIS U.S., Inc.
Laboratory ID: LK04016-002
Description: C-12 (30-34')
Matrix: Aqueous
Date Sampled: 11/03/2010 0801
Date Received: 11/04/2010

Run	Prep Method	Analytical Method	Dilution	Analysis Date	Analyst	Prep Date	Batch
1	5030B	8260B	1	11/05/2010 1628	DLB		45932

Parameter	CAS Number	Analytical Method	Result	Q	PQL	MDL	Units	Run
Acetone	67-64-1	8260B	4.5	J	10	3.3	ug/L	1
Benzene	71-43-2	8260B	ND		0.50	0.027	ug/L	1
Bromodichloromethane	75-27-4	8260B	ND		0.50	0.17	ug/L	1
Bromoform	75-25-2	8260B	ND		0.50	0.010	ug/L	1
Bromomethane (Methyl bromide)	74-83-9	8260B	ND		0.50	0.20	ug/L	1
2-Butanone (MEK)	78-93-3	8260B	ND		10	2.0	ug/L	1
Carbon disulfide	75-15-0	8260B	0.47	J	0.50	0.097	ug/L	1
Carbon tetrachloride	56-23-5	8260B	ND		0.50	0.085	ug/L	1
Chlorobenzene	108-90-7	8260B	ND		0.50	0.17	ug/L	1
Chloroethane	75-00-3	8260B	ND		0.50	0.17	ug/L	1
Chloroform	67-66-3	8260B	ND		0.50	0.17	ug/L	1
Chloromethane (Methyl chloride)	74-87-3	8260B	ND		0.50	0.17	ug/L	1
Cyclohexane	110-82-7	8260B	ND		0.50	0.30	ug/L	1
1,2-Dibromo-3-chloropropane (DBCP)	96-12-8	8260B	ND		0.50	0.069	ug/L	1
Dibromochloromethane	124-48-1	8260B	ND		0.50	0.17	ug/L	1
1,2-Dibromoethane (EDB)	106-93-4	8260B	ND		0.50	0.061	ug/L	1
1,3-Dichlorobenzene	541-73-1	8260B	ND		0.50	0.17	ug/L	1
1,2-Dichlorobenzene	95-50-1	8260B	ND		0.50	0.17	ug/L	1
1,4-Dichlorobenzene	106-46-7	8260B	ND		0.50	0.17	ug/L	1
Dichlorodifluoromethane	75-71-8	8260B	ND		0.50	0.071	ug/L	1
1,1-Dichloroethane	75-34-3	8260B	ND		0.50	0.054	ug/L	1
1,2-Dichloroethane	107-06-2	8260B	ND		0.50	0.023	ug/L	1
trans-1,2-Dichloroethene	156-60-5	8260B	ND		0.50	0.079	ug/L	1
1,1-Dichloroethene	75-35-4	8260B	ND		0.50	0.094	ug/L	1
cis-1,2-Dichloroethene	156-59-2	8260B	ND		0.50	0.087	ug/L	1
1,2-Dichloropropane	78-87-5	8260B	ND		0.50	0.081	ug/L	1
trans-1,3-Dichloropropene	10061-02-6	8260B	ND		0.50	0.18	ug/L	1
cis-1,3-Dichloropropene	10061-01-5	8260B	ND		0.50	0.090	ug/L	1
Ethylbenzene	100-41-4	8260B	ND		0.50	0.17	ug/L	1
2-Hexanone	591-78-6	8260B	ND		10	0.27	ug/L	1
Isopropylbenzene	98-82-8	8260B	ND		0.50	0.029	ug/L	1
Methyl acetate	79-20-9	8260B	ND		1.0	0.30	ug/L	1
Methyl tertiary butyl ether (MTBE)	1634-04-4	8260B	ND		0.50	0.019	ug/L	1
4-Methyl-2-pentanone	108-10-1	8260B	ND		10	0.31	ug/L	1
Methylcyclohexane	108-87-2	8260B	ND		5.0	0.95	ug/L	1
Methylene chloride	75-09-2	8260B	ND		0.50	0.17	ug/L	1
Styrene	100-42-5	8260B	ND		0.50	0.015	ug/L	1
1,1,2,2-Tetrachloroethane	79-34-5	8260B	ND		0.50	0.013	ug/L	1
Tetrachloroethene	127-18-4	8260B	ND		0.50	0.014	ug/L	1
Toluene	108-88-3	8260B	0.19	J	0.50	0.17	ug/L	1
1,1,2-Trichloro-1,2,2-Trifluoroethane	76-13-1	8260B	ND		0.50	0.30	ug/L	1
1,2,4-Trichlorobenzene	120-82-1	8260B	ND		0.50	0.17	ug/L	1
1,1,1-Trichloroethane	71-55-6	8260B	ND		0.50	0.029	ug/L	1
1,1,2-Trichloroethane	79-00-5	8260B	ND		0.50	0.031	ug/L	1

PQL = Practical quantitation limit
B = Detected in the method blank
E = Quantitation of compound exceeded the calibration range
ND = Not detected at or above the MDL
J = Estimated result < PQL and ≥ MDL
P = The RPD between two GC columns exceeds 40%
Where applicable, all soil sample analysis are reported on a dry weight basis unless flagged with a "W"
N = Recovery is out of criteria
H = Out of holding time

Volatile Organic Compounds by GC/MS

Client: ARCADIS U.S., Inc.
Laboratory ID: LK04016-002
Description: C-12 (30-34')
Matrix: Aqueous
Date Sampled: 11/03/2010 0801
Date Received: 11/04/2010

Run	Prep Method	Analytical Method	Dilution	Analysis Date	Analyst	Prep Date	Batch
1	5030B	8260B	1	11/05/2010 1628	DLB		45932

Parameter	CAS Number	Analytical Method	Result	Q	PQL	MDL	Units	Run
Trichloroethene	79-01-6	8260B	ND		0.50	0.024	ug/L	1
Trichlorofluoromethane	75-69-4	8260B	ND		0.50	0.051	ug/L	1
Vinyl chloride	75-01-4	8260B	ND		0.50	0.065	ug/L	1
Xylenes (total)	1330-20-7	8260B	ND		0.50	0.17	ug/L	1

Surrogate	Q	Run 1 % Recovery	Acceptance Limits
1,2-Dichloroethane-d4		101	70-130
Bromofluorobenzene		89	70-130
Toluene-d8		104	70-130

PQL = Practical quantitation limit
B = Detected in the method blank
E = Quantitation of compound exceeded the calibration range
ND = Not detected at or above the MDL
J = Estimated result < PQL and ≥ MDL
P = The RPD between two GC columns exceeds 40%
Where applicable, all soil sample analysis are reported on a dry weight basis unless flagged with a "W"
N = Recovery is out of criteria
H = Out of holding time

Volatile Organic Compounds by GC/MS

Client: ARCADIS U.S., Inc.
Laboratory ID: LK04016-003
Description: C-12 (36-40')
Matrix: Aqueous
Date Sampled: 11/03/2010 0922
Date Received: 11/04/2010

Run	Prep Method	Analytical Method	Dilution	Analysis Date	Analyst	Prep Date	Batch
1	5030B	8260B	1	11/05/2010 1650	DLB		45932

Parameter	CAS Number	Analytical Method	Result	Q	PQL	MDL	Units	Run
Acetone	67-64-1	8260B	9.1	J	10	3.3	ug/L	1
Benzene	71-43-2	8260B	0.24	J	0.50	0.027	ug/L	1
Bromodichloromethane	75-27-4	8260B	ND		0.50	0.17	ug/L	1
Bromoform	75-25-2	8260B	ND		0.50	0.010	ug/L	1
Bromomethane (Methyl bromide)	74-83-9	8260B	ND		0.50	0.20	ug/L	1
2-Butanone (MEK)	78-93-3	8260B	ND		10	2.0	ug/L	1
Carbon disulfide	75-15-0	8260B	ND		0.50	0.097	ug/L	1
Carbon tetrachloride	56-23-5	8260B	ND		0.50	0.085	ug/L	1
Chlorobenzene	108-90-7	8260B	ND		0.50	0.17	ug/L	1
Chloroethane	75-00-3	8260B	ND		0.50	0.17	ug/L	1
Chloroform	67-66-3	8260B	ND		0.50	0.17	ug/L	1
Chloromethane (Methyl chloride)	74-87-3	8260B	0.67		0.50	0.17	ug/L	1
Cyclohexane	110-82-7	8260B	ND		0.50	0.30	ug/L	1
1,2-Dibromo-3-chloropropane (DBCP)	96-12-8	8260B	ND		0.50	0.069	ug/L	1
Dibromochloromethane	124-48-1	8260B	ND		0.50	0.17	ug/L	1
1,2-Dibromoethane (EDB)	106-93-4	8260B	ND		0.50	0.061	ug/L	1
1,3-Dichlorobenzene	541-73-1	8260B	ND		0.50	0.17	ug/L	1
1,2-Dichlorobenzene	95-50-1	8260B	ND		0.50	0.17	ug/L	1
1,4-Dichlorobenzene	106-46-7	8260B	ND		0.50	0.17	ug/L	1
Dichlorodifluoromethane	75-71-8	8260B	ND		0.50	0.071	ug/L	1
1,1-Dichloroethane	75-34-3	8260B	ND		0.50	0.054	ug/L	1
1,2-Dichloroethane	107-06-2	8260B	ND		0.50	0.023	ug/L	1
trans-1,2-Dichloroethene	156-60-5	8260B	ND		0.50	0.079	ug/L	1
1,1-Dichloroethene	75-35-4	8260B	ND		0.50	0.094	ug/L	1
cis-1,2-Dichloroethene	156-59-2	8260B	ND		0.50	0.087	ug/L	1
1,2-Dichloropropane	78-87-5	8260B	ND		0.50	0.081	ug/L	1
trans-1,3-Dichloropropene	10061-02-6	8260B	ND		0.50	0.18	ug/L	1
cis-1,3-Dichloropropene	10061-01-5	8260B	ND		0.50	0.090	ug/L	1
Ethylbenzene	100-41-4	8260B	ND		0.50	0.17	ug/L	1
2-Hexanone	591-78-6	8260B	ND		10	0.27	ug/L	1
Isopropylbenzene	98-82-8	8260B	ND		0.50	0.029	ug/L	1
Methyl acetate	79-20-9	8260B	ND		1.0	0.30	ug/L	1
Methyl tertiary butyl ether (MTBE)	1634-04-4	8260B	ND		0.50	0.019	ug/L	1
4-Methyl-2-pentanone	108-10-1	8260B	ND		10	0.31	ug/L	1
Methylcyclohexane	108-87-2	8260B	ND		5.0	0.95	ug/L	1
Methylene chloride	75-09-2	8260B	ND		0.50	0.17	ug/L	1
Styrene	100-42-5	8260B	ND		0.50	0.015	ug/L	1
1,1,2,2-Tetrachloroethane	79-34-5	8260B	ND		0.50	0.013	ug/L	1
Tetrachloroethene	127-18-4	8260B	0.12	J	0.50	0.014	ug/L	1
Toluene	108-88-3	8260B	0.54		0.50	0.17	ug/L	1
1,1,2-Trichloro-1,2,2-Trifluoroethane	76-13-1	8260B	ND		0.50	0.30	ug/L	1
1,2,4-Trichlorobenzene	120-82-1	8260B	ND		0.50	0.17	ug/L	1
1,1,1-Trichloroethane	71-55-6	8260B	ND		0.50	0.029	ug/L	1
1,1,2-Trichloroethane	79-00-5	8260B	ND		0.50	0.031	ug/L	1

PQL = Practical quantitation limit
B = Detected in the method blank
E = Quantitation of compound exceeded the calibration range
ND = Not detected at or above the MDL
J = Estimated result < PQL and ≥ MDL
P = The RPD between two GC columns exceeds 40%
Where applicable, all soil sample analysis are reported on a dry weight basis unless flagged with a "W"
N = Recovery is out of criteria
H = Out of holding time

Volatile Organic Compounds by GC/MS

Client: ARCADIS U.S., Inc.
Laboratory ID: LK04016-003
Description: C-12 (36-40')
Matrix: Aqueous
Date Sampled: 11/03/2010 0922
Date Received: 11/04/2010

Run	Prep Method	Analytical Method	Dilution	Analysis Date	Analyst	Prep Date	Batch
1	5030B	8260B	1	11/05/2010 1650	DLB		45932

Parameter	CAS Number	Analytical Method	Result	Q	PQL	MDL	Units	Run
Trichloroethene	79-01-6	8260B	ND		0.50	0.024	ug/L	1
Trichlorofluoromethane	75-69-4	8260B	ND		0.50	0.051	ug/L	1
Vinyl chloride	75-01-4	8260B	ND		0.50	0.065	ug/L	1
Xylenes (total)	1330-20-7	8260B	0.55		0.50	0.17	ug/L	1

Surrogate	Q	Run 1 % Recovery	Acceptance Limits
1,2-Dichloroethane-d4		101	70-130
Bromofluorobenzene		88	70-130
Toluene-d8		105	70-130

PQL = Practical quantitation limit
B = Detected in the method blank
E = Quantitation of compound exceeded the calibration range
ND = Not detected at or above the MDL
J = Estimated result < PQL and ≥ MDL
P = The RPD between two GC columns exceeds 40%
Where applicable, all soil sample analysis are reported on a dry weight basis unless flagged with a "W"
N = Recovery is out of criteria
H = Out of holding time

Volatile Organic Compounds by GC/MS

Client: ARCADIS U.S., Inc.
Laboratory ID: LK04016-004
Description: C-12 (42-46')
Matrix: Solid
Date Sampled: 11/03/2010 1025
Date Received: 11/04/2010

Run	Prep Method	Analytical Method	Dilution	Analysis Date	Analyst	Prep Date	Batch	Sample Wt.(g)
1	5035	8260B	1	11/09/2010 0035	DLB		46104	5.07

Parameter	CAS Number	Analytical Method	Result	Q	PQL	MDL	Units	Run
Acetone	67-64-1	8260B	ND	W	20	6.6	ug/kg	1
Benzene	71-43-2	8260B	ND	W	4.9	1.1	ug/kg	1
Bromodichloromethane	75-27-4	8260B	ND	W	4.9	1.7	ug/kg	1
Bromoform	75-25-2	8260B	ND	W	4.9	0.69	ug/kg	1
Bromomethane (Methyl bromide)	74-83-9	8260B	ND	W	4.9	1.8	ug/kg	1
2-Butanone (MEK)	78-93-3	8260B	ND	W	9.9	2.4	ug/kg	1
Carbon disulfide	75-15-0	8260B	5.0	W	4.9	1.3	ug/kg	1
Carbon tetrachloride	56-23-5	8260B	ND	W	4.9	1.8	ug/kg	1
Chlorobenzene	108-90-7	8260B	ND	W	4.9	1.7	ug/kg	1
Chloroethane	75-00-3	8260B	ND	W	4.9	1.3	ug/kg	1
Chloroform	67-66-3	8260B	ND	W	4.9	0.82	ug/kg	1
Chloromethane (Methyl chloride)	74-87-3	8260B	ND	W	4.9	0.99	ug/kg	1
Cyclohexane	110-82-7	8260B	ND	W	4.9	0.66	ug/kg	1
1,2-Dibromo-3-chloropropane (DBCP)	96-12-8	8260B	ND	W	4.9	1.5	ug/kg	1
Dibromochloromethane	124-48-1	8260B	ND	W	4.9	1.7	ug/kg	1
1,2-Dibromoethane (EDB)	106-93-4	8260B	ND	W	4.9	0.84	ug/kg	1
1,2-Dichlorobenzene	95-50-1	8260B	ND	W	4.9	1.7	ug/kg	1
1,3-Dichlorobenzene	541-73-1	8260B	ND	W	4.9	1.7	ug/kg	1
1,4-Dichlorobenzene	106-46-7	8260B	ND	W	4.9	1.7	ug/kg	1
Dichlorodifluoromethane	75-71-8	8260B	ND	W	4.9	1.6	ug/kg	1
1,1-Dichloroethane	75-34-3	8260B	ND	W	4.9	0.72	ug/kg	1
1,2-Dichloroethane	107-06-2	8260B	ND	W	4.9	0.99	ug/kg	1
1,1-Dichloroethene	75-35-4	8260B	ND	W	4.9	1.7	ug/kg	1
cis-1,2-Dichloroethene	156-59-2	8260B	ND	W	4.9	0.75	ug/kg	1
trans-1,2-Dichloroethene	156-60-5	8260B	ND	W	4.9	1.5	ug/kg	1
1,2-Dichloropropane	78-87-5	8260B	ND	W	4.9	0.90	ug/kg	1
cis-1,3-Dichloropropene	10061-01-5	8260B	ND	W	4.9	0.67	ug/kg	1
trans-1,3-Dichloropropene	10061-02-6	8260B	ND	W	4.9	0.81	ug/kg	1
Ethylbenzene	100-41-4	8260B	ND	W	4.9	1.7	ug/kg	1
2-Hexanone	591-78-6	8260B	ND	W	9.9	1.3	ug/kg	1
Isopropylbenzene	98-82-8	8260B	ND	W	4.9	0.79	ug/kg	1
Methyl acetate	79-20-9	8260B	ND	W	4.9	0.66	ug/kg	1
Methyl tertiary butyl ether (MTBE)	1634-04-4	8260B	ND	W	4.9	0.39	ug/kg	1
4-Methyl-2-pentanone	108-10-1	8260B	ND	W	9.9	1.5	ug/kg	1
Methylcyclohexane	108-87-2	8260B	ND	W	4.9	0.60	ug/kg	1
Methylene chloride	75-09-2	8260B	ND	W	4.9	2.6	ug/kg	1
Styrene	100-42-5	8260B	ND	W	4.9	1.1	ug/kg	1
1,1,2,2-Tetrachloroethane	79-34-5	8260B	ND	W	4.9	0.46	ug/kg	1
Tetrachloroethene	127-18-4	8260B	ND	W	4.9	0.49	ug/kg	1
Toluene	108-88-3	8260B	ND	W	4.9	1.7	ug/kg	1
1,1,2-Trichloro-1,2,2-Trifluoroethane	76-13-1	8260B	ND	W	4.9	2.1	ug/kg	1
1,2,4-Trichlorobenzene	120-82-1	8260B	1.7	BWJ	4.9	1.7	ug/kg	1
1,1,1-Trichloroethane	71-55-6	8260B	ND	W	4.9	0.84	ug/kg	1
1,1,2-Trichloroethane	79-00-5	8260B	ND	W	4.9	0.78	ug/kg	1

PQL = Practical quantitation limit
B = Detected in the method blank
E = Quantitation of compound exceeded the calibration range
ND = Not detected at or above the MDL
J = Estimated result < PQL and ≥ MDL
P = The RPD between two GC columns exceeds 40%
Where applicable, all soil sample analysis are reported on a dry weight basis unless flagged with a "W"
N = Recovery is out of criteria
H = Out of holding time

Volatile Organic Compounds by GC/MS

Client: ARCADIS U.S., Inc.
Laboratory ID: LK04016-004
Description: C-12 (42-46')
Matrix: Solid
Date Sampled: 11/03/2010 1025
Date Received: 11/04/2010

Run	Prep Method	Analytical Method	Dilution	Analysis Date	Analyst	Prep Date	Batch	Sample Wt.(g)
1	5035	8260B	1	11/09/2010 0035	DLB		46104	5.07

Parameter	CAS Number	Analytical Method	Result	Q	PQL	MDL	Units	Run
Trichloroethene	79-01-6	8260B	ND	W	4.9	1.9	ug/kg	1
Trichlorofluoromethane	75-69-4	8260B	ND	W	4.9	1.5	ug/kg	1
Vinyl chloride	75-01-4	8260B	ND	W	4.9	0.85	ug/kg	1
Xylenes (total)	1330-20-7	8260B	ND	W	4.9	2.9	ug/kg	1

Surrogate	Q	Run 1 % Recovery	Acceptance Limits
1,2-Dichloroethane-d4		81	53-142
Bromofluorobenzene		94	47-138
Toluene-d8		109	68-124

PQL = Practical quantitation limit
B = Detected in the method blank
E = Quantitation of compound exceeded the calibration range
ND = Not detected at or above the MDL
J = Estimated result < PQL and ≥ MDL
P = The RPD between two GC columns exceeds 40%
Where applicable, all soil sample analysis are reported on a dry weight basis unless flagged with a "W"
N = Recovery is out of criteria
H = Out of holding time

Volatile Organic Compounds by GC/MS

Client: ARCADIS U.S., Inc.
Laboratory ID: LK04016-005
Description: B-5 (30-34')
Matrix: Aqueous
Date Sampled: 11/03/2010 1222
Date Received: 11/04/2010

Run	Prep Method	Analytical Method	Dilution	Analysis Date	Analyst	Prep Date	Batch
1	5030B	8260B	1	11/05/2010 1733	DLB		45932

Parameter	CAS Number	Analytical Method	Result	Q	PQL	MDL	Units	Run
Acetone	67-64-1	8260B	ND		10	3.3	ug/L	1
Benzene	71-43-2	8260B	ND		0.50	0.027	ug/L	1
Bromodichloromethane	75-27-4	8260B	ND		0.50	0.17	ug/L	1
Bromoform	75-25-2	8260B	ND		0.50	0.010	ug/L	1
Bromomethane (Methyl bromide)	74-83-9	8260B	ND		0.50	0.20	ug/L	1
2-Butanone (MEK)	78-93-3	8260B	ND		10	2.0	ug/L	1
Carbon disulfide	75-15-0	8260B	0.35	J	0.50	0.097	ug/L	1
Carbon tetrachloride	56-23-5	8260B	ND		0.50	0.085	ug/L	1
Chlorobenzene	108-90-7	8260B	ND		0.50	0.17	ug/L	1
Chloroethane	75-00-3	8260B	ND		0.50	0.17	ug/L	1
Chloroform	67-66-3	8260B	ND		0.50	0.17	ug/L	1
Chloromethane (Methyl chloride)	74-87-3	8260B	ND		0.50	0.17	ug/L	1
Cyclohexane	110-82-7	8260B	ND		0.50	0.30	ug/L	1
1,2-Dibromo-3-chloropropane (DBCP)	96-12-8	8260B	ND		0.50	0.069	ug/L	1
Dibromochloromethane	124-48-1	8260B	ND		0.50	0.17	ug/L	1
1,2-Dibromoethane (EDB)	106-93-4	8260B	ND		0.50	0.061	ug/L	1
1,3-Dichlorobenzene	541-73-1	8260B	ND		0.50	0.17	ug/L	1
1,2-Dichlorobenzene	95-50-1	8260B	ND		0.50	0.17	ug/L	1
1,4-Dichlorobenzene	106-46-7	8260B	ND		0.50	0.17	ug/L	1
Dichlorodifluoromethane	75-71-8	8260B	ND		0.50	0.071	ug/L	1
1,1-Dichloroethane	75-34-3	8260B	ND		0.50	0.054	ug/L	1
1,2-Dichloroethane	107-06-2	8260B	ND		0.50	0.023	ug/L	1
trans-1,2-Dichloroethene	156-60-5	8260B	ND		0.50	0.079	ug/L	1
1,1-Dichloroethene	75-35-4	8260B	ND		0.50	0.094	ug/L	1
cis-1,2-Dichloroethene	156-59-2	8260B	ND		0.50	0.087	ug/L	1
1,2-Dichloropropane	78-87-5	8260B	ND		0.50	0.081	ug/L	1
trans-1,3-Dichloropropene	10061-02-6	8260B	ND		0.50	0.18	ug/L	1
cis-1,3-Dichloropropene	10061-01-5	8260B	ND		0.50	0.090	ug/L	1
Ethylbenzene	100-41-4	8260B	ND		0.50	0.17	ug/L	1
2-Hexanone	591-78-6	8260B	ND		10	0.27	ug/L	1
Isopropylbenzene	98-82-8	8260B	ND		0.50	0.029	ug/L	1
Methyl acetate	79-20-9	8260B	ND		1.0	0.30	ug/L	1
Methyl tertiary butyl ether (MTBE)	1634-04-4	8260B	ND		0.50	0.019	ug/L	1
4-Methyl-2-pentanone	108-10-1	8260B	ND		10	0.31	ug/L	1
Methylcyclohexane	108-87-2	8260B	ND		5.0	0.95	ug/L	1
Methylene chloride	75-09-2	8260B	ND		0.50	0.17	ug/L	1
Styrene	100-42-5	8260B	ND		0.50	0.015	ug/L	1
1,1,2,2-Tetrachloroethane	79-34-5	8260B	ND		0.50	0.013	ug/L	1
Tetrachloroethene	127-18-4	8260B	ND		0.50	0.014	ug/L	1
Toluene	108-88-3	8260B	ND		0.50	0.17	ug/L	1
1,1,2-Trichloro-1,2,2-Trifluoroethane	76-13-1	8260B	ND		0.50	0.30	ug/L	1
1,2,4-Trichlorobenzene	120-82-1	8260B	ND		0.50	0.17	ug/L	1
1,1,1-Trichloroethane	71-55-6	8260B	ND		0.50	0.029	ug/L	1
1,1,2-Trichloroethane	79-00-5	8260B	ND		0.50	0.031	ug/L	1

PQL = Practical quantitation limit
B = Detected in the method blank
E = Quantitation of compound exceeded the calibration range
ND = Not detected at or above the MDL
J = Estimated result < PQL and ≥ MDL
P = The RPD between two GC columns exceeds 40%
Where applicable, all soil sample analysis are reported on a dry weight basis unless flagged with a "W"
N = Recovery is out of criteria
H = Out of holding time

Volatile Organic Compounds by GC/MS

Client: ARCADIS U.S., Inc.
Laboratory ID: LK04016-005
Description: B-5 (30-34')
Matrix: Aqueous
Date Sampled: 11/03/2010 1222
Date Received: 11/04/2010

Run	Prep Method	Analytical Method	Dilution	Analysis Date	Analyst	Prep Date	Batch
1	5030B	8260B	1	11/05/2010 1733	DLB		45932

Parameter	CAS Number	Analytical Method	Result	Q	PQL	MDL	Units	Run
Trichloroethene	79-01-6	8260B	ND		0.50	0.024	ug/L	1
Trichlorofluoromethane	75-69-4	8260B	ND		0.50	0.051	ug/L	1
Vinyl chloride	75-01-4	8260B	ND		0.50	0.065	ug/L	1
Xylenes (total)	1330-20-7	8260B	ND		0.50	0.17	ug/L	1

Surrogate	Q	Run 1 % Recovery	Acceptance Limits
1,2-Dichloroethane-d4		105	70-130
Bromofluorobenzene		89	70-130
Toluene-d8		105	70-130

PQL = Practical quantitation limit
B = Detected in the method blank
E = Quantitation of compound exceeded the calibration range
ND = Not detected at or above the MDL
J = Estimated result < PQL and ≥ MDL
P = The RPD between two GC columns exceeds 40%
Where applicable, all soil sample analysis are reported on a dry weight basis unless flagged with a "W"
N = Recovery is out of criteria
H = Out of holding time

Volatile Organic Compounds by GC/MS

Client: ARCADIS U.S., Inc.
Laboratory ID: LK04016-006
Description: B-5 (36-40')
Matrix: Aqueous
Date Sampled: 11/03/2010 1423
Date Received: 11/04/2010

Run	Prep Method	Analytical Method	Dilution	Analysis Date	Analyst	Prep Date	Batch
1	5030B	8260B	1	11/05/2010 1817	DLB		45932

Parameter	CAS Number	Analytical Method	Result	Q	PQL	MDL	Units	Run
Acetone	67-64-1	8260B	ND		10	3.3	ug/L	1
Benzene	71-43-2	8260B	0.23	J	0.50	0.027	ug/L	1
Bromodichloromethane	75-27-4	8260B	ND		0.50	0.17	ug/L	1
Bromoform	75-25-2	8260B	ND		0.50	0.010	ug/L	1
Bromomethane (Methyl bromide)	74-83-9	8260B	ND		0.50	0.20	ug/L	1
2-Butanone (MEK)	78-93-3	8260B	ND		10	2.0	ug/L	1
Carbon disulfide	75-15-0	8260B	ND		0.50	0.097	ug/L	1
Carbon tetrachloride	56-23-5	8260B	ND		0.50	0.085	ug/L	1
Chlorobenzene	108-90-7	8260B	ND		0.50	0.17	ug/L	1
Chloroethane	75-00-3	8260B	ND		0.50	0.17	ug/L	1
Chloroform	67-66-3	8260B	ND		0.50	0.17	ug/L	1
Chloromethane (Methyl chloride)	74-87-3	8260B	ND		0.50	0.17	ug/L	1
Cyclohexane	110-82-7	8260B	ND		0.50	0.30	ug/L	1
1,2-Dibromo-3-chloropropane (DBCP)	96-12-8	8260B	ND		0.50	0.069	ug/L	1
Dibromochloromethane	124-48-1	8260B	ND		0.50	0.17	ug/L	1
1,2-Dibromoethane (EDB)	106-93-4	8260B	ND		0.50	0.061	ug/L	1
1,3-Dichlorobenzene	541-73-1	8260B	ND		0.50	0.17	ug/L	1
1,2-Dichlorobenzene	95-50-1	8260B	ND		0.50	0.17	ug/L	1
1,4-Dichlorobenzene	106-46-7	8260B	ND		0.50	0.17	ug/L	1
Dichlorodifluoromethane	75-71-8	8260B	ND		0.50	0.071	ug/L	1
1,1-Dichloroethane	75-34-3	8260B	ND		0.50	0.054	ug/L	1
1,2-Dichloroethane	107-06-2	8260B	ND		0.50	0.023	ug/L	1
trans-1,2-Dichloroethene	156-60-5	8260B	ND		0.50	0.079	ug/L	1
1,1-Dichloroethene	75-35-4	8260B	ND		0.50	0.094	ug/L	1
cis-1,2-Dichloroethene	156-59-2	8260B	ND		0.50	0.087	ug/L	1
1,2-Dichloropropane	78-87-5	8260B	ND		0.50	0.081	ug/L	1
trans-1,3-Dichloropropene	10061-02-6	8260B	ND		0.50	0.18	ug/L	1
cis-1,3-Dichloropropene	10061-01-5	8260B	ND		0.50	0.090	ug/L	1
Ethylbenzene	100-41-4	8260B	ND		0.50	0.17	ug/L	1
2-Hexanone	591-78-6	8260B	0.38	J	10	0.27	ug/L	1
Isopropylbenzene	98-82-8	8260B	ND		0.50	0.029	ug/L	1
Methyl acetate	79-20-9	8260B	ND		1.0	0.30	ug/L	1
Methyl tertiary butyl ether (MTBE)	1634-04-4	8260B	ND		0.50	0.019	ug/L	1
4-Methyl-2-pentanone	108-10-1	8260B	ND		10	0.31	ug/L	1
Methylcyclohexane	108-87-2	8260B	ND		5.0	0.95	ug/L	1
Methylene chloride	75-09-2	8260B	ND		0.50	0.17	ug/L	1
Styrene	100-42-5	8260B	ND		0.50	0.015	ug/L	1
1,1,2,2-Tetrachloroethane	79-34-5	8260B	ND		0.50	0.013	ug/L	1
Tetrachloroethene	127-18-4	8260B	ND		0.50	0.014	ug/L	1
Toluene	108-88-3	8260B	0.33	J	0.50	0.17	ug/L	1
1,1,2-Trichloro-1,2,2-Trifluoroethane	76-13-1	8260B	ND		0.50	0.30	ug/L	1
1,2,4-Trichlorobenzene	120-82-1	8260B	ND		0.50	0.17	ug/L	1
1,1,1-Trichloroethane	71-55-6	8260B	ND		0.50	0.029	ug/L	1
1,1,2-Trichloroethane	79-00-5	8260B	ND		0.50	0.031	ug/L	1

PQL = Practical quantitation limit
B = Detected in the method blank
E = Quantitation of compound exceeded the calibration range
ND = Not detected at or above the MDL
J = Estimated result < PQL and ≥ MDL
P = The RPD between two GC columns exceeds 40%
Where applicable, all soil sample analysis are reported on a dry weight basis unless flagged with a "W"
N = Recovery is out of criteria
H = Out of holding time

Volatile Organic Compounds by GC/MS

Client: ARCADIS U.S., Inc.
Laboratory ID: LK04016-006
Description: B-5 (36-40')
Matrix: Aqueous
Date Sampled: 11/03/2010 1423
Date Received: 11/04/2010

Run	Prep Method	Analytical Method	Dilution	Analysis Date	Analyst	Prep Date	Batch
1	5030B	8260B	1	11/05/2010 1817	DLB		45932

Parameter	CAS Number	Analytical Method	Result	Q	PQL	MDL	Units	Run
Trichloroethene	79-01-6	8260B	ND		0.50	0.024	ug/L	1
Trichlorofluoromethane	75-69-4	8260B	ND		0.50	0.051	ug/L	1
Vinyl chloride	75-01-4	8260B	ND		0.50	0.065	ug/L	1
Xylenes (total)	1330-20-7	8260B	ND		0.50	0.17	ug/L	1

Surrogate	Q	Run 1 % Recovery	Acceptance Limits
1,2-Dichloroethane-d4		104	70-130
Bromofluorobenzene		88	70-130
Toluene-d8		106	70-130

PQL = Practical quantitation limit
B = Detected in the method blank
E = Quantitation of compound exceeded the calibration range
ND = Not detected at or above the MDL
J = Estimated result < PQL and ≥ MDL
P = The RPD between two GC columns exceeds 40%
Where applicable, all soil sample analysis are reported on a dry weight basis unless flagged with a "W"
N = Recovery is out of criteria
H = Out of holding time

Volatile Organic Compounds by GC/MS

Client: ARCADIS U.S., Inc.
Laboratory ID: LK04016-007
Description: B-5 (42-46')
Matrix: Aqueous
Date Sampled: 11/03/2010 1457
Date Received: 11/04/2010

Run	Prep Method	Analytical Method	Dilution	Analysis Date	Analyst	Prep Date	Batch
1	5030B	8260B	1	11/09/2010 0206	DLB		46137

Parameter	CAS Number	Analytical Method	Result	Q	PQL	MDL	Units	Run
Acetone	67-64-1	8260B	19		10	3.3	ug/L	1
Benzene	71-43-2	8260B	0.18	J	0.50	0.027	ug/L	1
Bromodichloromethane	75-27-4	8260B	ND		0.50	0.17	ug/L	1
Bromoform	75-25-2	8260B	ND		0.50	0.010	ug/L	1
Bromomethane (Methyl bromide)	74-83-9	8260B	ND		0.50	0.20	ug/L	1
2-Butanone (MEK)	78-93-3	8260B	ND		10	2.0	ug/L	1
Carbon disulfide	75-15-0	8260B	ND		0.50	0.097	ug/L	1
Carbon tetrachloride	56-23-5	8260B	ND		0.50	0.085	ug/L	1
Chlorobenzene	108-90-7	8260B	ND		0.50	0.17	ug/L	1
Chloroethane	75-00-3	8260B	ND		0.50	0.17	ug/L	1
Chloroform	67-66-3	8260B	ND		0.50	0.17	ug/L	1
Chloromethane (Methyl chloride)	74-87-3	8260B	ND		0.50	0.17	ug/L	1
Cyclohexane	110-82-7	8260B	ND		0.50	0.30	ug/L	1
1,2-Dibromo-3-chloropropane (DBCP)	96-12-8	8260B	ND		0.50	0.069	ug/L	1
Dibromochloromethane	124-48-1	8260B	ND		0.50	0.17	ug/L	1
1,2-Dibromoethane (EDB)	106-93-4	8260B	ND		0.50	0.061	ug/L	1
1,3-Dichlorobenzene	541-73-1	8260B	ND		0.50	0.17	ug/L	1
1,2-Dichlorobenzene	95-50-1	8260B	ND		0.50	0.17	ug/L	1
1,4-Dichlorobenzene	106-46-7	8260B	ND		0.50	0.17	ug/L	1
Dichlorodifluoromethane	75-71-8	8260B	ND		0.50	0.071	ug/L	1
1,1-Dichloroethane	75-34-3	8260B	ND		0.50	0.054	ug/L	1
1,2-Dichloroethane	107-06-2	8260B	ND		0.50	0.023	ug/L	1
trans-1,2-Dichloroethene	156-60-5	8260B	ND		0.50	0.079	ug/L	1
1,1-Dichloroethene	75-35-4	8260B	ND		0.50	0.094	ug/L	1
cis-1,2-Dichloroethene	156-59-2	8260B	ND		0.50	0.087	ug/L	1
1,2-Dichloropropane	78-87-5	8260B	ND		0.50	0.081	ug/L	1
trans-1,3-Dichloropropene	10061-02-6	8260B	ND		0.50	0.18	ug/L	1
cis-1,3-Dichloropropene	10061-01-5	8260B	ND		0.50	0.090	ug/L	1
Ethylbenzene	100-41-4	8260B	ND		0.50	0.17	ug/L	1
2-Hexanone	591-78-6	8260B	ND		10	0.27	ug/L	1
Isopropylbenzene	98-82-8	8260B	ND		0.50	0.029	ug/L	1
Methyl acetate	79-20-9	8260B	ND		1.0	0.30	ug/L	1
Methyl tertiary butyl ether (MTBE)	1634-04-4	8260B	ND		0.50	0.019	ug/L	1
4-Methyl-2-pentanone	108-10-1	8260B	ND		10	0.31	ug/L	1
Methylcyclohexane	108-87-2	8260B	ND		5.0	0.95	ug/L	1
Methylene chloride	75-09-2	8260B	ND		0.50	0.17	ug/L	1
Styrene	100-42-5	8260B	ND		0.50	0.015	ug/L	1
1,1,2,2-Tetrachloroethane	79-34-5	8260B	ND		0.50	0.013	ug/L	1
Tetrachloroethene	127-18-4	8260B	ND		0.50	0.014	ug/L	1
Toluene	108-88-3	8260B	0.69	B	0.50	0.17	ug/L	1
1,1,2-Trichloro-1,2,2-Trifluoroethane	76-13-1	8260B	ND		0.50	0.30	ug/L	1
1,2,4-Trichlorobenzene	120-82-1	8260B	ND		0.50	0.17	ug/L	1
1,1,1-Trichloroethane	71-55-6	8260B	ND		0.50	0.029	ug/L	1
1,1,2-Trichloroethane	79-00-5	8260B	ND		0.50	0.031	ug/L	1

PQL = Practical quantitation limit
B = Detected in the method blank
E = Quantitation of compound exceeded the calibration range
ND = Not detected at or above the MDL
J = Estimated result < PQL and ≥ MDL
P = The RPD between two GC columns exceeds 40%
Where applicable, all soil sample analysis are reported on a dry weight basis unless flagged with a "W"
N = Recovery is out of criteria
H = Out of holding time

Volatile Organic Compounds by GC/MS

Client: ARCADIS U.S., Inc.
Laboratory ID: LK04016-007
Description: B-5 (42-46')
Matrix: Aqueous
Date Sampled: 11/03/2010 1457
Date Received: 11/04/2010

Run	Prep Method	Analytical Method	Dilution	Analysis Date	Analyst	Prep Date	Batch
1	5030B	8260B	1	11/09/2010 0206	DLB		46137

Parameter	CAS Number	Analytical Method	Result	Q	PQL	MDL	Units	Run
Trichloroethene	79-01-6	8260B	ND		0.50	0.024	ug/L	1
Trichlorofluoromethane	75-69-4	8260B	ND		0.50	0.051	ug/L	1
Vinyl chloride	75-01-4	8260B	ND		0.50	0.065	ug/L	1
Xylenes (total)	1330-20-7	8260B	ND		0.50	0.17	ug/L	1

Surrogate	Q	Run 1 % Recovery	Acceptance Limits
1,2-Dichloroethane-d4		84	70-130
Bromofluorobenzene		92	70-130
Toluene-d8		102	70-130

PQL = Practical quantitation limit
B = Detected in the method blank
E = Quantitation of compound exceeded the calibration range
ND = Not detected at or above the MDL
J = Estimated result < PQL and ≥ MDL
P = The RPD between two GC columns exceeds 40%
Where applicable, all soil sample analysis are reported on a dry weight basis unless flagged with a "W"
N = Recovery is out of criteria
H = Out of holding time

Volatile Organic Compounds by GC/MS

Client: ARCADIS U.S., Inc.
Laboratory ID: LK04016-008
Description: Trip Blank
Matrix: Aqueous
Date Sampled: 11/04/2010 0955
Date Received: 11/04/2010

Run	Prep Method	Analytical Method	Dilution	Analysis Date	Analyst	Prep Date	Batch
1	5030B	8260B	1	11/05/2010 0534	DLB		45898

Parameter	CAS Number	Analytical Method	Result	Q	PQL	MDL	Units	Run
Acetone	67-64-1	8260B	3.3	J	10	3.3	ug/L	1
Benzene	71-43-2	8260B	ND		0.50	0.027	ug/L	1
Bromodichloromethane	75-27-4	8260B	ND		0.50	0.17	ug/L	1
Bromoform	75-25-2	8260B	1.3		0.50	0.010	ug/L	1
Bromomethane (Methyl bromide)	74-83-9	8260B	ND		0.50	0.20	ug/L	1
2-Butanone (MEK)	78-93-3	8260B	ND		10	2.0	ug/L	1
Carbon disulfide	75-15-0	8260B	ND		0.50	0.097	ug/L	1
Carbon tetrachloride	56-23-5	8260B	ND		0.50	0.085	ug/L	1
Chlorobenzene	108-90-7	8260B	ND		0.50	0.17	ug/L	1
Chloroethane	75-00-3	8260B	ND		0.50	0.17	ug/L	1
Chloroform	67-66-3	8260B	ND		0.50	0.17	ug/L	1
Chloromethane (Methyl chloride)	74-87-3	8260B	ND		0.50	0.17	ug/L	1
Cyclohexane	110-82-7	8260B	ND		0.50	0.30	ug/L	1
1,2-Dibromo-3-chloropropane (DBCP)	96-12-8	8260B	ND		0.50	0.069	ug/L	1
Dibromochloromethane	124-48-1	8260B	ND		0.50	0.17	ug/L	1
1,2-Dibromoethane (EDB)	106-93-4	8260B	ND		0.50	0.061	ug/L	1
1,3-Dichlorobenzene	541-73-1	8260B	ND		0.50	0.17	ug/L	1
1,2-Dichlorobenzene	95-50-1	8260B	ND		0.50	0.17	ug/L	1
1,4-Dichlorobenzene	106-46-7	8260B	ND		0.50	0.17	ug/L	1
Dichlorodifluoromethane	75-71-8	8260B	ND		0.50	0.071	ug/L	1
1,1-Dichloroethane	75-34-3	8260B	ND		0.50	0.054	ug/L	1
1,2-Dichloroethane	107-06-2	8260B	ND		0.50	0.023	ug/L	1
trans-1,2-Dichloroethene	156-60-5	8260B	ND		0.50	0.079	ug/L	1
1,1-Dichloroethene	75-35-4	8260B	ND		0.50	0.094	ug/L	1
cis-1,2-Dichloroethene	156-59-2	8260B	ND		0.50	0.087	ug/L	1
1,2-Dichloropropane	78-87-5	8260B	ND		0.50	0.081	ug/L	1
trans-1,3-Dichloropropene	10061-02-6	8260B	ND		0.50	0.18	ug/L	1
cis-1,3-Dichloropropene	10061-01-5	8260B	ND		0.50	0.090	ug/L	1
Ethylbenzene	100-41-4	8260B	ND		0.50	0.17	ug/L	1
2-Hexanone	591-78-6	8260B	ND		10	0.27	ug/L	1
Isopropylbenzene	98-82-8	8260B	ND		0.50	0.029	ug/L	1
Methyl acetate	79-20-9	8260B	ND		1.0	0.30	ug/L	1
Methyl tertiary butyl ether (MTBE)	1634-04-4	8260B	ND		0.50	0.019	ug/L	1
4-Methyl-2-pentanone	108-10-1	8260B	ND		10	0.31	ug/L	1
Methylcyclohexane	108-87-2	8260B	ND		5.0	0.95	ug/L	1
Methylene chloride	75-09-2	8260B	ND		0.50	0.17	ug/L	1
Styrene	100-42-5	8260B	ND		0.50	0.015	ug/L	1
1,1,2,2-Tetrachloroethane	79-34-5	8260B	ND		0.50	0.013	ug/L	1
Tetrachloroethene	127-18-4	8260B	ND		0.50	0.014	ug/L	1
Toluene	108-88-3	8260B	ND		0.50	0.17	ug/L	1
1,1,2-Trichloro-1,2,2-Trifluoroethane	76-13-1	8260B	ND		0.50	0.30	ug/L	1
1,2,4-Trichlorobenzene	120-82-1	8260B	ND		0.50	0.17	ug/L	1
1,1,1-Trichloroethane	71-55-6	8260B	ND		0.50	0.029	ug/L	1
1,1,2-Trichloroethane	79-00-5	8260B	ND		0.50	0.031	ug/L	1

PQL = Practical quantitation limit
B = Detected in the method blank
E = Quantitation of compound exceeded the calibration range
ND = Not detected at or above the MDL
J = Estimated result < PQL and ≥ MDL
P = The RPD between two GC columns exceeds 40%
Where applicable, all soil sample analysis are reported on a dry weight basis unless flagged with a "W"
N = Recovery is out of criteria
H = Out of holding time

Volatile Organic Compounds by GC/MS

Client: ARCADIS U.S., Inc.
Laboratory ID: LK04016-008
Description: Trip Blank
Matrix: Aqueous
Date Sampled: 11/04/2010 0955
Date Received: 11/04/2010

Run	Prep Method	Analytical Method	Dilution	Analysis Date	Analyst	Prep Date	Batch
1	5030B	8260B	1	11/05/2010 0534	DLB		45898

Parameter	CAS Number	Analytical Method	Result	Q	PQL	MDL	Units	Run
Trichloroethene	79-01-6	8260B	ND		0.50	0.024	ug/L	1
Trichlorofluoromethane	75-69-4	8260B	ND		0.50	0.051	ug/L	1
Vinyl chloride	75-01-4	8260B	ND		0.50	0.065	ug/L	1
Xylenes (total)	1330-20-7	8260B	ND		0.50	0.17	ug/L	1

Surrogate	Q	Run 1 % Recovery	Acceptance Limits
1,2-Dichloroethane-d4		105	70-130
Bromofluorobenzene		101	70-130
Toluene-d8		110	70-130

PQL = Practical quantitation limit
B = Detected in the method blank
E = Quantitation of compound exceeded the calibration range
ND = Not detected at or above the MDL
J = Estimated result < PQL and ≥ MDL
P = The RPD between two GC columns exceeds 40%
Where applicable, all soil sample analysis are reported on a dry weight basis unless flagged with a "W"
N = Recovery is out of criteria
H = Out of holding time

QC Summary

Volatile Organic Compounds by GC/MS - MB

Sample ID: LQ45898-001
Batch: 45898
Analytical Method: 8260B

Matrix: Aqueous
Prep Method: 5030B

Parameter	Result	Q	Dil	PQL	MDL	Units	Analysis Date
Acetone	ND		1	10	3.3	ug/L	11/05/2010 0255
Benzene	ND		1	0.50	0.027	ug/L	11/05/2010 0255
Bromodichloromethane	ND		1	0.50	0.17	ug/L	11/05/2010 0255
Bromoform	ND		1	0.50	0.010	ug/L	11/05/2010 0255
Bromomethane (Methyl bromide)	ND		1	0.50	0.20	ug/L	11/05/2010 0255
2-Butanone (MEK)	ND		1	10	2.0	ug/L	11/05/2010 0255
Carbon disulfide	ND		1	0.50	0.097	ug/L	11/05/2010 0255
Carbon tetrachloride	ND		1	0.50	0.085	ug/L	11/05/2010 0255
Chlorobenzene	ND		1	0.50	0.17	ug/L	11/05/2010 0255
Chloroethane	ND		1	0.50	0.17	ug/L	11/05/2010 0255
Chloroform	ND		1	0.50	0.17	ug/L	11/05/2010 0255
Chloromethane (Methyl chloride)	ND		1	0.50	0.17	ug/L	11/05/2010 0255
Cyclohexane	ND		1	0.50	0.30	ug/L	11/05/2010 0255
1,2-Dibromo-3-chloropropane (DBCP)	ND		1	0.50	0.069	ug/L	11/05/2010 0255
Dibromochloromethane	ND		1	0.50	0.17	ug/L	11/05/2010 0255
1,2-Dibromoethane (EDB)	ND		1	0.50	0.061	ug/L	11/05/2010 0255
1,4-Dichlorobenzene	ND		1	0.50	0.17	ug/L	11/05/2010 0255
1,2-Dichlorobenzene	ND		1	0.50	0.17	ug/L	11/05/2010 0255
1,3-Dichlorobenzene	ND		1	0.50	0.17	ug/L	11/05/2010 0255
Dichlorodifluoromethane	ND		1	0.50	0.071	ug/L	11/05/2010 0255
1,2-Dichloroethane	ND		1	0.50	0.023	ug/L	11/05/2010 0255
1,1-Dichloroethane	ND		1	0.50	0.054	ug/L	11/05/2010 0255
cis-1,2-Dichloroethene	ND		1	0.50	0.087	ug/L	11/05/2010 0255
1,1-Dichloroethene	ND		1	0.50	0.094	ug/L	11/05/2010 0255
trans-1,2-Dichloroethene	ND		1	0.50	0.079	ug/L	11/05/2010 0255
1,2-Dichloropropane	ND		1	0.50	0.081	ug/L	11/05/2010 0255
cis-1,3-Dichloropropene	ND		1	0.50	0.090	ug/L	11/05/2010 0255
trans-1,3-Dichloropropene	ND		1	0.50	0.18	ug/L	11/05/2010 0255
Ethylbenzene	ND		1	0.50	0.17	ug/L	11/05/2010 0255
2-Hexanone	ND		1	10	0.27	ug/L	11/05/2010 0255
Isopropylbenzene	ND		1	0.50	0.029	ug/L	11/05/2010 0255
Methyl acetate	ND		1	1.0	0.30	ug/L	11/05/2010 0255
Methyl tertiary butyl ether (MTBE)	ND		1	0.50	0.019	ug/L	11/05/2010 0255
4-Methyl-2-pentanone	ND		1	10	0.31	ug/L	11/05/2010 0255
Methylcyclohexane	ND		1	5.0	0.95	ug/L	11/05/2010 0255
Methylene chloride	ND		1	0.50	0.17	ug/L	11/05/2010 0255
Styrene	ND		1	0.50	0.015	ug/L	11/05/2010 0255
1,1,2,2-Tetrachloroethane	ND		1	0.50	0.013	ug/L	11/05/2010 0255
Tetrachloroethene	ND		1	0.50	0.014	ug/L	11/05/2010 0255
Toluene	ND		1	0.50	0.17	ug/L	11/05/2010 0255
1,1,2-Trichloro-1,2,2-Trifluoroethane	ND		1	0.50	0.30	ug/L	11/05/2010 0255
1,2,4-Trichlorobenzene	ND		1	0.50	0.17	ug/L	11/05/2010 0255
1,1,1-Trichloroethane	ND		1	0.50	0.029	ug/L	11/05/2010 0255
1,1,2-Trichloroethane	ND		1	0.50	0.031	ug/L	11/05/2010 0255

PQL = Practical quantitation limit
ND = Not detected at or above the MDL
P = The RPD between two GC columns exceeds 40%
J = Estimated result < PQL and ≥ MDL
N - Recovery is out of criteria
+ - RPD is out of criteria

Where applicable, all soil sample analysis are reported on a dry weight basis unless flagged with a "W"

Note: Calculations are performed before rounding to avoid round-off errors in calculated results

Volatile Organic Compounds by GC/MS - MB

Sample ID: LQ45898-001
Batch: 45898
Analytical Method: 8260B

Matrix: Aqueous
Prep Method: 5030B

Parameter	Result	Q	Dil	PQL	MDL	Units	Analysis Date
Trichloroethene	ND		1	0.50	0.024	ug/L	11/05/2010 0255
Trichlorofluoromethane	ND		1	0.50	0.051	ug/L	11/05/2010 0255
Vinyl chloride	ND		1	0.50	0.065	ug/L	11/05/2010 0255
Xylenes (total)	ND		1	0.50	0.17	ug/L	11/05/2010 0255

Surrogate	Q	% Rec	Acceptance Limit
Bromofluorobenzene		97	70-130
1,2-Dichloroethane-d4		91	70-130
Toluene-d8		95	70-130

PQL = Practical quantitation limit
ND = Not detected at or above the MDL
P = The RPD between two GC columns exceeds 40%
J = Estimated result < PQL and ≥ MDL
N - Recovery is out of criteria
+ - RPD is out of criteria

Where applicable, all soil sample analysis are reported on a dry weight basis unless flagged with a "W"

Note: Calculations are performed before rounding to avoid round-off errors in calculated results

Volatile Organic Compounds by GC/MS - LCS

Sample ID: LQ45898-002
Batch: 45898
Analytical Method: 8260B

Matrix: Aqueous
Prep Method: 5030B

Parameter	Spike Amount (ug/L)	Result (ug/L)	Q	Dil	% Rec	% Rec Limit	Analysis Date
Acetone	100	110		1	106	46-153	11/05/2010 0107
Benzene	50	54		1	108	70-130	11/05/2010 0107
Bromodichloromethane	50	58		1	116	70-130	11/05/2010 0107
Bromoform	50	56		1	112	70-130	11/05/2010 0107
Bromomethane (Methyl bromide)	50	50		1	100	60-140	11/05/2010 0107
2-Butanone (MEK)	100	110		1	105	60-140	11/05/2010 0107
Carbon disulfide	50	50		1	100	60-140	11/05/2010 0107
Carbon tetrachloride	50	57		1	113	70-130	11/05/2010 0107
Chlorobenzene	50	54		1	108	70-130	11/05/2010 0107
Chloroethane	50	50		1	99	42-163	11/05/2010 0107
Chloroform	50	53		1	106	70-130	11/05/2010 0107
Chloromethane (Methyl chloride)	50	52		1	104	20-158	11/05/2010 0107
Cyclohexane	50	56		1	111	70-130	11/05/2010 0107
1,2-Dibromo-3-chloropropane (DBCP)	50	57		1	114	70-130	11/05/2010 0107
Dibromochloromethane	50	63		1	127	70-130	11/05/2010 0107
1,2-Dibromoethane (EDB)	50	56		1	112	70-130	11/05/2010 0107
1,4-Dichlorobenzene	50	54		1	109	70-130	11/05/2010 0107
1,2-Dichlorobenzene	50	55		1	110	70-130	11/05/2010 0107
1,3-Dichlorobenzene	50	55		1	110	70-130	11/05/2010 0107
Dichlorodifluoromethane	50	50		1	100	60-140	11/05/2010 0107
1,2-Dichloroethane	50	54		1	107	70-130	11/05/2010 0107
1,1-Dichloroethane	50	52		1	104	70-130	11/05/2010 0107
cis-1,2-Dichloroethene	50	52		1	104	70-130	11/05/2010 0107
1,1-Dichloroethene	50	53		1	106	70-130	11/05/2010 0107
trans-1,2-Dichloroethene	50	52		1	104	70-130	11/05/2010 0107
1,2-Dichloropropane	50	53		1	106	70-130	11/05/2010 0107
cis-1,3-Dichloropropene	50	56		1	112	70-130	11/05/2010 0107
trans-1,3-Dichloropropene	50	58		1	116	70-130	11/05/2010 0107
Ethylbenzene	50	56		1	111	70-130	11/05/2010 0107
2-Hexanone	100	110		1	115	60-140	11/05/2010 0107
Isopropylbenzene	50	60		1	120	70-130	11/05/2010 0107
Methyl acetate	50	58		1	116	15-128	11/05/2010 0107
Methyl tertiary butyl ether (MTBE)	50	54		1	107	70-130	11/05/2010 0107
4-Methyl-2-pentanone	100	110		1	112	60-140	11/05/2010 0107
Methylcyclohexane	50	56		1	112	70-130	11/05/2010 0107
Methylene chloride	50	50		1	100	70-130	11/05/2010 0107
Styrene	50	61		1	122	70-130	11/05/2010 0107
1,1,2,2-Tetrachloroethane	50	57		1	115	70-130	11/05/2010 0107
Tetrachloroethene	50	55		1	111	70-130	11/05/2010 0107
Toluene	50	54		1	108	70-130	11/05/2010 0107
1,1,2-Trichloro-1,2,2-Trifluoroethane	50	53		1	105	70-130	11/05/2010 0107
1,2,4-Trichlorobenzene	50	57		1	113	70-130	11/05/2010 0107
1,1,1-Trichloroethane	50	56		1	113	70-130	11/05/2010 0107
1,1,2-Trichloroethane	50	54		1	109	70-130	11/05/2010 0107

PQL = Practical quantitation limit
ND = Not detected at or above the MDL
P = The RPD between two GC columns exceeds 40%
J = Estimated result < PQL and ≥ MDL
N - Recovery is out of criteria
+ - RPD is out of criteria

Where applicable, all soil sample analysis are reported on a dry weight basis unless flagged with a "W"

Note: Calculations are performed before rounding to avoid round-off errors in calculated results

Volatile Organic Compounds by GC/MS - LCS

Sample ID: LQ45898-002
Batch: 45898
Analytical Method: 8260B

Matrix: Aqueous
Prep Method: 5030B

Parameter	Spike Amount (ug/L)	Result (ug/L)	Q	Dil	% Rec	% Rec Limit	Analysis Date
Trichloroethene	50	54		1	108	70-130	11/05/2010 0107
Trichlorofluoromethane	50	56		1	111	60-140	11/05/2010 0107
Vinyl chloride	50	49		1	99	60-140	11/05/2010 0107
Xylenes (total)	100	110		1	113	70-130	11/05/2010 0107

Surrogate	Q	% Rec	Acceptance Limit
Bromofluorobenzene		100	70-130
1,2-Dichloroethane-d4		91	70-130
Toluene-d8		99	70-130

PQL = Practical quantitation limit
ND = Not detected at or above the MDL
P = The RPD between two GC columns exceeds 40%
J = Estimated result < PQL and ≥ MDL
N - Recovery is out of criteria
+ - RPD is out of criteria

Where applicable, all soil sample analysis are reported on a dry weight basis unless flagged with a "W"

Note: Calculations are performed before rounding to avoid round-off errors in calculated results

Volatile Organic Compounds by GC/MS - LCSD

Sample ID: LQ45898-003
Batch: 45898
Analytical Method: 8260B

Matrix: Aqueous
Prep Method: 5030B

Parameter	Spike Amount (ug/L)	Result (ug/L)	Q	Dil	% Rec	% RPD	% Rec Limit	% RPD Limit	Analysis Date
Acetone	100	100		1	102	4.4	46-153	20	11/05/2010 0129
Benzene	50	54		1	108	0.49	70-130	20	11/05/2010 0129
Bromodichloromethane	50	58		1	116	0.23	70-130	20	11/05/2010 0129
Bromoform	50	56		1	113	0.16	70-130	20	11/05/2010 0129
Bromomethane (Methyl bromide)	50	51		1	102	1.4	60-140	20	11/05/2010 0129
2-Butanone (MEK)	100	110		1	105	0.12	60-140	20	11/05/2010 0129
Carbon disulfide	50	51		1	101	0.94	60-140	20	11/05/2010 0129
Carbon tetrachloride	50	58		1	116	2.6	70-130	20	11/05/2010 0129
Chlorobenzene	50	54		1	108	0.49	70-130	20	11/05/2010 0129
Chloroethane	50	51		1	101	2.0	42-163	20	11/05/2010 0129
Chloroform	50	53		1	106	0.14	70-130	20	11/05/2010 0129
Chloromethane (Methyl chloride)	50	56		1	111	6.3	20-158	20	11/05/2010 0129
Cyclohexane	50	56		1	113	1.7	70-130	20	11/05/2010 0129
1,2-Dibromo-3-chloropropane (DBCP)	50	57		1	114	0.34	70-130	20	11/05/2010 0129
Dibromochloromethane	50	64		1	128	0.88	70-130	20	11/05/2010 0129
1,2-Dibromoethane (EDB)	50	56		1	111	0.35	70-130	20	11/05/2010 0129
1,4-Dichlorobenzene	50	54		1	108	0.62	70-130	20	11/05/2010 0129
1,2-Dichlorobenzene	50	55		1	110	0.15	70-130	20	11/05/2010 0129
1,3-Dichlorobenzene	50	55		1	110	0.62	70-130	20	11/05/2010 0129
Dichlorodifluoromethane	50	51		1	101	1.2	60-140	20	11/05/2010 0129
1,2-Dichloroethane	50	54		1	108	0.28	70-130	20	11/05/2010 0129
1,1-Dichloroethane	50	52		1	104	0.056	70-130	20	11/05/2010 0129
cis-1,2-Dichloroethene	50	52		1	104	0.27	70-130	20	11/05/2010 0129
1,1-Dichloroethene	50	53		1	106	0.10	70-130	20	11/05/2010 0129
trans-1,2-Dichloroethene	50	53		1	105	0.97	70-130	20	11/05/2010 0129
1,2-Dichloropropane	50	53		1	106	0.092	70-130	20	11/05/2010 0129
cis-1,3-Dichloropropene	50	57		1	114	1.7	70-130	20	11/05/2010 0129
trans-1,3-Dichloropropene	50	58		1	116	0.28	70-130	20	11/05/2010 0129
Ethylbenzene	50	56		1	112	0.34	70-130	20	11/05/2010 0129
2-Hexanone	100	110		1	115	0.097	60-140	20	11/05/2010 0129
Isopropylbenzene	50	60		1	121	0.82	70-130	20	11/05/2010 0129
Methyl acetate	50	59		1	117	0.75	15-128	20	11/05/2010 0129
Methyl tertiary butyl ether (MTBE)	50	54		1	108	1.1	70-130	20	11/05/2010 0129
4-Methyl-2-pentanone	100	110		1	114	1.4	60-140	20	11/05/2010 0129
Methylcyclohexane	50	56		1	111	0.24	70-130	20	11/05/2010 0129
Methylene chloride	50	50		1	100	0.63	70-130	20	11/05/2010 0129
Styrene	50	61		1	123	0.060	70-130	20	11/05/2010 0129
1,1,2,2-Tetrachloroethane	50	57		1	114	0.73	70-130	20	11/05/2010 0129
Tetrachloroethene	50	55		1	111	0.15	70-130	20	11/05/2010 0129
Toluene	50	54		1	108	0.24	70-130	20	11/05/2010 0129
1,1,2-Trichloro-1,2,2-Trifluoroethane	50	53		1	106	0.85	70-130	20	11/05/2010 0129
1,2,4-Trichlorobenzene	50	56		1	113	0.26	70-130	20	11/05/2010 0129
1,1,1-Trichloroethane	50	57		1	115	1.5	70-130	20	11/05/2010 0129
1,1,2-Trichloroethane	50	54		1	108	0.94	70-130	20	11/05/2010 0129

PQL = Practical quantitation limit
ND = Not detected at or above the MDL
P = The RPD between two GC columns exceeds 40%
J = Estimated result < PQL and ≥ MDL
N - Recovery is out of criteria
+ - RPD is out of criteria

Where applicable, all soil sample analysis are reported on a dry weight basis unless flagged with a "W"

Note: Calculations are performed before rounding to avoid round-off errors in calculated results

Volatile Organic Compounds by GC/MS - LCSD

Sample ID: LQ45898-003
Batch: 45898
Analytical Method: 8260B

Matrix: Aqueous
Prep Method: 5030B

Parameter	Spike Amount (ug/L)	Result (ug/L)	Q	Dil	% Rec	% RPD	% Rec Limit	% RPD Limit	Analysis Date
Trichloroethene	50	55		1	110	1.7	70-130	20	11/05/2010 0129
Trichlorofluoromethane	50	56		1	113	1.3	60-140	20	11/05/2010 0129
Vinyl chloride	50	52		1	103	4.4	60-140	20	11/05/2010 0129
Xylenes (total)	100	110		1	113	0.045	70-130	20	11/05/2010 0129

Surrogate	Q	% Rec	Acceptance Limit
Bromofluorobenzene		100	70-130
1,2-Dichloroethane-d4		91	70-130
Toluene-d8		99	70-130

PQL = Practical quantitation limit
ND = Not detected at or above the MDL
P = The RPD between two GC columns exceeds 40%
J = Estimated result < PQL and ≥ MDL
N - Recovery is out of criteria
+ - RPD is out of criteria

Where applicable, all soil sample analysis are reported on a dry weight basis unless flagged with a "W"

Note: Calculations are performed before rounding to avoid round-off errors in calculated results

Volatile Organic Compounds by GC/MS - MB

Sample ID: LQ45932-001
Batch: 45932
Analytical Method: 8260B

Matrix: Aqueous
Prep Method: 5030B

Parameter	Result	Q	Dil	PQL	MDL	Units	Analysis Date
Acetone	ND		1	10	3.3	ug/L	11/05/2010 1258
Benzene	ND		1	0.50	0.027	ug/L	11/05/2010 1258
Bromodichloromethane	ND		1	0.50	0.17	ug/L	11/05/2010 1258
Bromoform	ND		1	0.50	0.010	ug/L	11/05/2010 1258
Bromomethane (Methyl bromide)	ND		1	0.50	0.20	ug/L	11/05/2010 1258
2-Butanone (MEK)	ND		1	10	2.0	ug/L	11/05/2010 1258
Carbon disulfide	ND		1	0.50	0.097	ug/L	11/05/2010 1258
Carbon tetrachloride	ND		1	0.50	0.085	ug/L	11/05/2010 1258
Chlorobenzene	ND		1	0.50	0.17	ug/L	11/05/2010 1258
Chloroethane	ND		1	0.50	0.17	ug/L	11/05/2010 1258
Chloroform	ND		1	0.50	0.17	ug/L	11/05/2010 1258
Chloromethane (Methyl chloride)	ND		1	0.50	0.17	ug/L	11/05/2010 1258
Cyclohexane	ND		1	0.50	0.30	ug/L	11/05/2010 1258
1,2-Dibromo-3-chloropropane (DBCP)	ND		1	0.50	0.069	ug/L	11/05/2010 1258
Dibromochloromethane	ND		1	0.50	0.17	ug/L	11/05/2010 1258
1,2-Dibromoethane (EDB)	ND		1	0.50	0.061	ug/L	11/05/2010 1258
1,4-Dichlorobenzene	ND		1	0.50	0.17	ug/L	11/05/2010 1258
1,2-Dichlorobenzene	ND		1	0.50	0.17	ug/L	11/05/2010 1258
1,3-Dichlorobenzene	ND		1	0.50	0.17	ug/L	11/05/2010 1258
Dichlorodifluoromethane	ND		1	0.50	0.071	ug/L	11/05/2010 1258
1,2-Dichloroethane	ND		1	0.50	0.023	ug/L	11/05/2010 1258
1,1-Dichloroethane	ND		1	0.50	0.054	ug/L	11/05/2010 1258
cis-1,2-Dichloroethene	ND		1	0.50	0.087	ug/L	11/05/2010 1258
trans-1,2-Dichloroethene	ND		1	0.50	0.079	ug/L	11/05/2010 1258
1,1-Dichloroethene	ND		1	0.50	0.094	ug/L	11/05/2010 1258
1,2-Dichloropropane	ND		1	0.50	0.081	ug/L	11/05/2010 1258
cis-1,3-Dichloropropene	ND		1	0.50	0.090	ug/L	11/05/2010 1258
trans-1,3-Dichloropropene	ND		1	0.50	0.18	ug/L	11/05/2010 1258
Ethylbenzene	ND		1	0.50	0.17	ug/L	11/05/2010 1258
2-Hexanone	ND		1	10	0.27	ug/L	11/05/2010 1258
Isopropylbenzene	ND		1	0.50	0.029	ug/L	11/05/2010 1258
Methyl acetate	ND		1	1.0	0.30	ug/L	11/05/2010 1258
Methyl tertiary butyl ether (MTBE)	ND		1	0.50	0.019	ug/L	11/05/2010 1258
4-Methyl-2-pentanone	ND		1	10	0.31	ug/L	11/05/2010 1258
Methylcyclohexane	ND		1	5.0	0.95	ug/L	11/05/2010 1258
Methylene chloride	ND		1	0.50	0.17	ug/L	11/05/2010 1258
Styrene	ND		1	0.50	0.015	ug/L	11/05/2010 1258
1,1,2,2-Tetrachloroethane	ND		1	0.50	0.013	ug/L	11/05/2010 1258
Tetrachloroethene	ND		1	0.50	0.014	ug/L	11/05/2010 1258
Toluene	ND		1	0.50	0.17	ug/L	11/05/2010 1258
1,1,2-Trichloro-1,2,2-Trifluoroethane	ND		1	0.50	0.30	ug/L	11/05/2010 1258
1,2,4-Trichlorobenzene	ND		1	0.50	0.17	ug/L	11/05/2010 1258
1,1,2-Trichloroethane	ND		1	0.50	0.031	ug/L	11/05/2010 1258
1,1,1-Trichloroethane	ND		1	0.50	0.029	ug/L	11/05/2010 1258

PQL = Practical quantitation limit
ND = Not detected at or above the MDL
P = The RPD between two GC columns exceeds 40%
J = Estimated result < PQL and ≥ MDL
N - Recovery is out of criteria
+ - RPD is out of criteria

Where applicable, all soil sample analysis are reported on a dry weight basis unless flagged with a "W"

Note: Calculations are performed before rounding to avoid round-off errors in calculated results

Volatile Organic Compounds by GC/MS - MB

Sample ID: LQ45932-001
Batch: 45932
Analytical Method: 8260B

Matrix: Aqueous
Prep Method: 5030B

Parameter	Result	Q	Dil	PQL	MDL	Units	Analysis Date
Trichloroethene	ND		1	0.50	0.024	ug/L	11/05/2010 1258
Trichlorofluoromethane	ND		1	0.50	0.051	ug/L	11/05/2010 1258
Vinyl chloride	ND		1	0.50	0.065	ug/L	11/05/2010 1258
Xylenes (total)	ND		1	0.50	0.17	ug/L	11/05/2010 1258

Surrogate	Q	% Rec	Acceptance Limit
Bromofluorobenzene		94	70-130
1,2-Dichloroethane-d4		97	70-130
Toluene-d8		102	70-130

PQL = Practical quantitation limit
ND = Not detected at or above the MDL
P = The RPD between two GC columns exceeds 40%
J = Estimated result < PQL and ≥ MDL
N - Recovery is out of criteria
+ - RPD is out of criteria

Where applicable, all soil sample analysis are reported on a dry weight basis unless flagged with a "W"

Note: Calculations are performed before rounding to avoid round-off errors in calculated results

Volatile Organic Compounds by GC/MS - LCS

Sample ID: LQ45932-002
Batch: 45932
Analytical Method: 8260B

Matrix: Aqueous
Prep Method: 5030B

Parameter	Spike Amount (ug/L)	Result (ug/L)	Q	Dil	% Rec	% Rec Limit	Analysis Date
Acetone	100	130		1	125	46-153	11/05/2010 1131
Benzene	50	56		1	112	70-130	11/05/2010 1131
Bromodichloromethane	50	59		1	118	70-130	11/05/2010 1131
Bromoform	50	55		1	111	70-130	11/05/2010 1131
Bromomethane (Methyl bromide)	50	58		1	117	60-140	11/05/2010 1131
2-Butanone (MEK)	100	130		1	130	60-140	11/05/2010 1131
Carbon disulfide	50	49		1	99	60-140	11/05/2010 1131
Carbon tetrachloride	50	53		1	105	70-130	11/05/2010 1131
Chlorobenzene	50	55		1	109	70-130	11/05/2010 1131
Chloroethane	50	53		1	106	42-163	11/05/2010 1131
Chloroform	50	55		1	111	70-130	11/05/2010 1131
Chloromethane (Methyl chloride)	50	51		1	102	20-158	11/05/2010 1131
Cyclohexane	50	51		1	102	70-130	11/05/2010 1131
1,2-Dibromo-3-chloropropane (DBCP)	50	60		1	119	70-130	11/05/2010 1131
Dibromochloromethane	50	64		1	127	70-130	11/05/2010 1131
1,2-Dibromoethane (EDB)	50	59		1	119	70-130	11/05/2010 1131
1,4-Dichlorobenzene	50	53		1	106	70-130	11/05/2010 1131
1,2-Dichlorobenzene	50	55		1	110	70-130	11/05/2010 1131
1,3-Dichlorobenzene	50	54		1	108	70-130	11/05/2010 1131
Dichlorodifluoromethane	50	47		1	94	60-140	11/05/2010 1131
1,2-Dichloroethane	50	57		1	114	70-130	11/05/2010 1131
1,1-Dichloroethane	50	56		1	111	70-130	11/05/2010 1131
cis-1,2-Dichloroethene	50	55		1	110	70-130	11/05/2010 1131
trans-1,2-Dichloroethene	50	54		1	108	70-130	11/05/2010 1131
1,1-Dichloroethene	50	52		1	104	70-130	11/05/2010 1131
1,2-Dichloropropane	50	58		1	116	70-130	11/05/2010 1131
cis-1,3-Dichloropropene	50	58		1	117	70-130	11/05/2010 1131
trans-1,3-Dichloropropene	50	59		1	118	70-130	11/05/2010 1131
Ethylbenzene	50	55		1	110	70-130	11/05/2010 1131
2-Hexanone	100	120		1	124	60-140	11/05/2010 1131
Isopropylbenzene	50	57		1	113	70-130	11/05/2010 1131
Methyl acetate	50	67	N	1	133	15-128	11/05/2010 1131
Methyl tertiary butyl ether (MTBE)	50	59		1	117	70-130	11/05/2010 1131
4-Methyl-2-pentanone	100	130		1	126	60-140	11/05/2010 1131
Methylcyclohexane	50	52		1	105	70-130	11/05/2010 1131
Methylene chloride	50	54		1	108	70-130	11/05/2010 1131
Styrene	50	62		1	124	70-130	11/05/2010 1131
1,1,2,2-Tetrachloroethane	50	63		1	125	70-130	11/05/2010 1131
Tetrachloroethene	50	52		1	105	70-130	11/05/2010 1131
Toluene	50	55		1	111	70-130	11/05/2010 1131
1,1,2-Trichloro-1,2,2-Trifluoroethane	50	49		1	99	70-130	11/05/2010 1131
1,2,4-Trichlorobenzene	50	55		1	110	70-130	11/05/2010 1131
1,1,2-Trichloroethane	50	57		1	114	70-130	11/05/2010 1131
1,1,1-Trichloroethane	50	53		1	107	70-130	11/05/2010 1131

PQL = Practical quantitation limit
ND = Not detected at or above the MDL
P = The RPD between two GC columns exceeds 40%
J = Estimated result < PQL and ≥ MDL
N - Recovery is out of criteria
+ - RPD is out of criteria

Where applicable, all soil sample analysis are reported on a dry weight basis unless flagged with a "W"

Note: Calculations are performed before rounding to avoid round-off errors in calculated results

Volatile Organic Compounds by GC/MS - LCS

Sample ID: LQ45932-002
Batch: 45932
Analytical Method: 8260B

Matrix: Aqueous
Prep Method: 5030B

Parameter	Spike Amount (ug/L)	Result (ug/L)	Q	Dil	% Rec	% Rec Limit	Analysis Date
Trichloroethene	50	55		1	110	70-130	11/05/2010 1131
Trichlorofluoromethane	50	49		1	99	60-140	11/05/2010 1131
Vinyl chloride	50	53		1	105	60-140	11/05/2010 1131
Xylenes (total)	100	110		1	113	70-130	11/05/2010 1131

Surrogate	Q	% Rec	Acceptance Limit
Bromofluorobenzene		95	70-130
1,2-Dichloroethane-d4		98	70-130
Toluene-d8		106	70-130

PQL = Practical quantitation limit
ND = Not detected at or above the MDL
P = The RPD between two GC columns exceeds 40%
J = Estimated result < PQL and ≥ MDL
N - Recovery is out of criteria
+ - RPD is out of criteria

Where applicable, all soil sample analysis are reported on a dry weight basis unless flagged with a "W"

Note: Calculations are performed before rounding to avoid round-off errors in calculated results

Volatile Organic Compounds by GC/MS - LCSD

Sample ID: LQ45932-003
Batch: 45932
Analytical Method: 8260B

Matrix: Aqueous
Prep Method: 5030B

Parameter	Spike Amount (ug/L)	Result (ug/L)	Q	Dil	% Rec	% RPD	% Rec Limit	% RPD Limit	Analysis Date
Acetone	100	100		1	102	20	46-153	20	11/05/2010 1153
Benzene	50	50		1	100	11	70-130	20	11/05/2010 1153
Bromodichloromethane	50	53		1	106	11	70-130	20	11/05/2010 1153
Bromoform	50	48		1	96	14	70-130	20	11/05/2010 1153
Bromomethane (Methyl bromide)	50	45	+	1	90	26	60-140	20	11/05/2010 1153
2-Butanone (MEK)	100	110		1	106	20	60-140	20	11/05/2010 1153
Carbon disulfide	50	43		1	87	13	60-140	20	11/05/2010 1153
Carbon tetrachloride	50	47		1	95	10	70-130	20	11/05/2010 1153
Chlorobenzene	50	49		1	98	10	70-130	20	11/05/2010 1153
Chloroethane	50	45		1	91	16	42-163	20	11/05/2010 1153
Chloroform	50	49		1	98	12	70-130	20	11/05/2010 1153
Chloromethane (Methyl chloride)	50	44		1	89	14	20-158	20	11/05/2010 1153
Cyclohexane	50	46		1	91	12	70-130	20	11/05/2010 1153
1,2-Dibromo-3-chloropropane (DBCP)	50	51		1	103	15	70-130	20	11/05/2010 1153
Dibromochloromethane	50	57		1	113	11	70-130	20	11/05/2010 1153
1,2-Dibromoethane (EDB)	50	51		1	103	15	70-130	20	11/05/2010 1153
1,4-Dichlorobenzene	50	49		1	98	7.9	70-130	20	11/05/2010 1153
1,2-Dichlorobenzene	50	51		1	102	8.1	70-130	20	11/05/2010 1153
1,3-Dichlorobenzene	50	49		1	99	8.6	70-130	20	11/05/2010 1153
Dichlorodifluoromethane	50	40		1	81	15	60-140	20	11/05/2010 1153
1,2-Dichloroethane	50	50		1	100	13	70-130	20	11/05/2010 1153
1,1-Dichloroethane	50	49		1	97	13	70-130	20	11/05/2010 1153
cis-1,2-Dichloroethene	50	49		1	98	12	70-130	20	11/05/2010 1153
trans-1,2-Dichloroethene	50	48		1	96	11	70-130	20	11/05/2010 1153
1,1-Dichloroethene	50	45		1	91	13	70-130	20	11/05/2010 1153
1,2-Dichloropropane	50	50		1	100	14	70-130	20	11/05/2010 1153
cis-1,3-Dichloropropene	50	52		1	104	12	70-130	20	11/05/2010 1153
trans-1,3-Dichloropropene	50	52		1	103	13	70-130	20	11/05/2010 1153
Ethylbenzene	50	50		1	99	10	70-130	20	11/05/2010 1153
2-Hexanone	100	110		1	105	16	60-140	20	11/05/2010 1153
Isopropylbenzene	50	52		1	105	7.6	70-130	20	11/05/2010 1153
Methyl acetate	50	54	+	1	108	22	15-128	20	11/05/2010 1153
Methyl tertiary butyl ether (MTBE)	50	51		1	101	14	70-130	20	11/05/2010 1153
4-Methyl-2-pentanone	100	110		1	106	18	60-140	20	11/05/2010 1153
Methylcyclohexane	50	47		1	95	10	70-130	20	11/05/2010 1153
Methylene chloride	50	47		1	95	13	70-130	20	11/05/2010 1153
Styrene	50	56		1	112	10	70-130	20	11/05/2010 1153
1,1,2,2-Tetrachloroethane	50	55		1	109	13	70-130	20	11/05/2010 1153
Tetrachloroethene	50	47		1	95	10	70-130	20	11/05/2010 1153
Toluene	50	50		1	100	10	70-130	20	11/05/2010 1153
1,1,2-Trichloro-1,2,2-Trifluoroethane	50	44		1	88	11	70-130	20	11/05/2010 1153
1,2,4-Trichlorobenzene	50	51		1	101	8.4	70-130	20	11/05/2010 1153
1,1,2-Trichloroethane	50	50		1	101	12	70-130	20	11/05/2010 1153
1,1,1-Trichloroethane	50	49		1	97	9.2	70-130	20	11/05/2010 1153

PQL = Practical quantitation limit
ND = Not detected at or above the MDL
P = The RPD between two GC columns exceeds 40%
J = Estimated result < PQL and ≥ MDL
N - Recovery is out of criteria
+ - RPD is out of criteria

Where applicable, all soil sample analysis are reported on a dry weight basis unless flagged with a "W"

Note: Calculations are performed before rounding to avoid round-off errors in calculated results

Volatile Organic Compounds by GC/MS - LCSD

Sample ID: LQ45932-003
Batch: 45932
Analytical Method: 8260B

Matrix: Aqueous
Prep Method: 5030B

Parameter	Spike Amount (ug/L)	Result (ug/L)	Q	Dil	% Rec	% RPD	% Rec Limit	% RPD Limit	Analysis Date
Trichloroethene	50	49		1	98	11	70-130	20	11/05/2010 1153
Trichlorofluoromethane	50	44		1	87	12	60-140	20	11/05/2010 1153
Vinyl chloride	50	43	+	1	85	21	60-140	20	11/05/2010 1153
Xylenes (total)	100	100		1	102	10	70-130	20	11/05/2010 1153

Surrogate	Q	% Rec	Acceptance Limit
Bromofluorobenzene		96	70-130
1,2-Dichloroethane-d4		95	70-130
Toluene-d8		105	70-130

PQL = Practical quantitation limit
ND = Not detected at or above the MDL
P = The RPD between two GC columns exceeds 40%
J = Estimated result < PQL and ≥ MDL
N - Recovery is out of criteria
+ - RPD is out of criteria

Where applicable, all soil sample analysis are reported on a dry weight basis unless flagged with a "W"

Note: Calculations are performed before rounding to avoid round-off errors in calculated results

Volatile Organic Compounds by GC/MS - MB

Sample ID: LQ46104-001
Batch: 46104
Analytical Method: 8260B

Matrix: Solid
Prep Method: 5035

Parameter	Result	Q	Dil	PQL	MDL	Units	Analysis Date
Acetone	ND		1	20	6.7	ug/kg	11/08/2010 2325
Benzene	ND		1	5.0	1.1	ug/kg	11/08/2010 2325
Bromodichloromethane	ND		1	5.0	1.7	ug/kg	11/08/2010 2325
Bromoform	3.0	J	1	5.0	0.70	ug/kg	11/08/2010 2325
Bromomethane (Methyl bromide)	ND		1	5.0	1.8	ug/kg	11/08/2010 2325
2-Butanone (MEK)	ND		1	10	2.4	ug/kg	11/08/2010 2325
Carbon disulfide	ND		1	5.0	1.3	ug/kg	11/08/2010 2325
Carbon tetrachloride	ND		1	5.0	1.8	ug/kg	11/08/2010 2325
Chlorobenzene	ND		1	5.0	1.7	ug/kg	11/08/2010 2325
Chloroethane	ND		1	5.0	1.3	ug/kg	11/08/2010 2325
Chloroform	ND		1	5.0	0.83	ug/kg	11/08/2010 2325
Chloromethane (Methyl chloride)	ND		1	5.0	1.0	ug/kg	11/08/2010 2325
Cyclohexane	ND		1	5.0	0.67	ug/kg	11/08/2010 2325
1,2-Dibromo-3-chloropropane (DBCP)	ND		1	5.0	1.5	ug/kg	11/08/2010 2325
Dibromochloromethane	ND		1	5.0	1.7	ug/kg	11/08/2010 2325
1,2-Dibromoethane (EDB)	ND		1	5.0	0.85	ug/kg	11/08/2010 2325
1,4-Dichlorobenzene	ND		1	5.0	1.7	ug/kg	11/08/2010 2325
1,3-Dichlorobenzene	ND		1	5.0	1.7	ug/kg	11/08/2010 2325
1,2-Dichlorobenzene	ND		1	5.0	1.7	ug/kg	11/08/2010 2325
Dichlorodifluoromethane	ND		1	5.0	1.6	ug/kg	11/08/2010 2325
1,2-Dichloroethane	ND		1	5.0	1.0	ug/kg	11/08/2010 2325
1,1-Dichloroethane	ND		1	5.0	0.73	ug/kg	11/08/2010 2325
trans-1,2-Dichloroethene	ND		1	5.0	1.5	ug/kg	11/08/2010 2325
cis-1,2-Dichloroethene	ND		1	5.0	0.76	ug/kg	11/08/2010 2325
1,1-Dichloroethene	ND		1	5.0	1.7	ug/kg	11/08/2010 2325
1,2-Dichloropropane	ND		1	5.0	0.91	ug/kg	11/08/2010 2325
trans-1,3-Dichloropropene	ND		1	5.0	0.82	ug/kg	11/08/2010 2325
cis-1,3-Dichloropropene	ND		1	5.0	0.68	ug/kg	11/08/2010 2325
Ethylbenzene	ND		1	5.0	1.7	ug/kg	11/08/2010 2325
2-Hexanone	ND		1	10	1.3	ug/kg	11/08/2010 2325
Isopropylbenzene	ND		1	5.0	0.80	ug/kg	11/08/2010 2325
Methyl acetate	ND		1	5.0	0.67	ug/kg	11/08/2010 2325
Methyl tertiary butyl ether (MTBE)	ND		1	5.0	0.40	ug/kg	11/08/2010 2325
4-Methyl-2-pentanone	ND		1	10	1.5	ug/kg	11/08/2010 2325
Methylcyclohexane	ND		1	5.0	0.61	ug/kg	11/08/2010 2325
Methylene chloride	ND		1	5.0	2.6	ug/kg	11/08/2010 2325
Styrene	ND		1	5.0	1.1	ug/kg	11/08/2010 2325
1,1,2,2-Tetrachloroethane	ND		1	5.0	0.47	ug/kg	11/08/2010 2325
Tetrachloroethene	ND		1	5.0	0.50	ug/kg	11/08/2010 2325
Toluene	ND		1	5.0	1.7	ug/kg	11/08/2010 2325
1,1,2-Trichloro-1,2,2-Trifluoroethane	ND		1	5.0	2.1	ug/kg	11/08/2010 2325
1,2,4-Trichlorobenzene	1.7	J	1	5.0	1.7	ug/kg	11/08/2010 2325
1,1,2-Trichloroethane	ND		1	5.0	0.79	ug/kg	11/08/2010 2325
1,1,1-Trichloroethane	ND		1	5.0	0.85	ug/kg	11/08/2010 2325

PQL = Practical quantitation limit
ND = Not detected at or above the MDL
P = The RPD between two GC columns exceeds 40%
J = Estimated result < PQL and ≥ MDL
N - Recovery is out of criteria
+ - RPD is out of criteria

Where applicable, all soil sample analysis are reported on a dry weight basis unless flagged with a "W"

Note: Calculations are performed before rounding to avoid round-off errors in calculated results

Volatile Organic Compounds by GC/MS - MB

Sample ID: LQ46104-001
Batch: 46104
Analytical Method: 8260B

Matrix: Solid
Prep Method: 5035

Parameter	Result	Q	Dil	PQL	MDL	Units	Analysis Date
Trichloroethene	ND		1	5.0	1.9	ug/kg	11/08/2010 2325
Trichlorofluoromethane	ND		1	5.0	1.5	ug/kg	11/08/2010 2325
Vinyl chloride	ND		1	5.0	0.86	ug/kg	11/08/2010 2325
Xylenes (total)	ND		1	5.0	2.9	ug/kg	11/08/2010 2325

Surrogate	Q	% Rec	Acceptance Limit
Bromofluorobenzene		97	47-138
1,2-Dichloroethane-d4		95	53-142
Toluene-d8		102	68-124

PQL = Practical quantitation limit
ND = Not detected at or above the MDL
P = The RPD between two GC columns exceeds 40%
J = Estimated result < PQL and ≥ MDL
N - Recovery is out of criteria
+ - RPD is out of criteria

Where applicable, all soil sample analysis are reported on a dry weight basis unless flagged with a "W"

Note: Calculations are performed before rounding to avoid round-off errors in calculated results

Volatile Organic Compounds by GC/MS - LCS

Sample ID: LQ46104-002
Batch: 46104
Analytical Method: 8260B

Matrix: Solid
Prep Method: 5035

Parameter	Spike Amount (ug/kg)	Result (ug/kg)	Q	Dil	% Rec	% Rec Limit	Analysis Date
Acetone	100	84		1	84	42-149	11/08/2010 2038
Benzene	50	48		1	95	69-123	11/08/2010 2038
Bromodichloromethane	50	56		1	111	69-121	11/08/2010 2038
Bromoform	50	50		1	100	61-119	11/08/2010 2038
Bromomethane (Methyl bromide)	50	34		1	68	35-144	11/08/2010 2038
2-Butanone (MEK)	100	84		1	84	57-148	11/08/2010 2038
Carbon disulfide	50	36		1	72	58-122	11/08/2010 2038
Carbon tetrachloride	50	47		1	94	58-136	11/08/2010 2038
Chlorobenzene	50	54		1	109	59-129	11/08/2010 2038
Chloroethane	50	36		1	72	50-132	11/08/2010 2038
Chloroform	50	49		1	99	71-125	11/08/2010 2038
Chloromethane (Methyl chloride)	50	26		1	53	34-134	11/08/2010 2038
Cyclohexane	50	43		1	85	53-139	11/08/2010 2038
1,2-Dibromo-3-chloropropane (DBCP)	50	55		1	111	55-125	11/08/2010 2038
Dibromochloromethane	50	54		1	108	66-119	11/08/2010 2038
1,2-Dibromoethane (EDB)	50	55		1	111	74-124	11/08/2010 2038
1,4-Dichlorobenzene	50	62		1	124	52-133	11/08/2010 2038
1,3-Dichlorobenzene	50	58		1	116	51-134	11/08/2010 2038
1,2-Dichlorobenzene	50	54		1	109	57-131	11/08/2010 2038
Dichlorodifluoromethane	50	31		1	63	10-157	11/08/2010 2038
1,2-Dichloroethane	50	49		1	98	67-129	11/08/2010 2038
1,1-Dichloroethane	50	45		1	91	71-127	11/08/2010 2038
trans-1,2-Dichloroethene	50	45		1	90	68-131	11/08/2010 2038
cis-1,2-Dichloroethene	50	47		1	94	70-122	11/08/2010 2038
1,1-Dichloroethene	50	42		1	84	69-138	11/08/2010 2038
1,2-Dichloropropane	50	50		1	100	72-124	11/08/2010 2038
trans-1,3-Dichloropropene	50	59		1	117	70-124	11/08/2010 2038
cis-1,3-Dichloropropene	50	54		1	108	70-126	11/08/2010 2038
Ethylbenzene	50	56		1	113	59-128	11/08/2010 2038
2-Hexanone	100	100		1	103	54-137	11/08/2010 2038
Isopropylbenzene	50	60		1	120	50-136	11/08/2010 2038
Methyl acetate	50	40		1	80	59-137	11/08/2010 2038
Methyl tertiary butyl ether (MTBE)	50	41		1	82	72-122	11/08/2010 2038
4-Methyl-2-pentanone	100	94		1	94	60-134	11/08/2010 2038
Methylcyclohexane	50	50		1	101	41-144	11/08/2010 2038
Methylene chloride	50	39		1	78	77-129	11/08/2010 2038
Styrene	50	58		1	116	54-136	11/08/2010 2038
1,1,2,2-Tetrachloroethane	50	55		1	111	69-132	11/08/2010 2038
Tetrachloroethene	50	63		1	126	70-130	11/08/2010 2038
Toluene	50	51		1	101	61-129	11/08/2010 2038
1,1,2-Trichloro-1,2,2-Trifluoroethane	50	41		1	81	49-136	11/08/2010 2038
1,2,4-Trichlorobenzene	50	62		1	124	34-145	11/08/2010 2038
1,1,2-Trichloroethane	50	55		1	109	55-128	11/08/2010 2038
1,1,1-Trichloroethane	50	45		1	91	63-128	11/08/2010 2038

PQL = Practical quantitation limit
ND = Not detected at or above the MDL
P = The RPD between two GC columns exceeds 40%
J = Estimated result < PQL and ≥ MDL
N - Recovery is out of criteria
+ - RPD is out of criteria

Where applicable, all soil sample analysis are reported on a dry weight basis unless flagged with a "W"

Note: Calculations are performed before rounding to avoid round-off errors in calculated results

Volatile Organic Compounds by GC/MS - LCS

Sample ID: LQ46104-002
Batch: 46104
Analytical Method: 8260B

Matrix: Solid
Prep Method: 5035

Parameter	Spike Amount (ug/kg)	Result (ug/kg)	Q	Dil	% Rec	% Rec Limit	Analysis Date
Trichloroethene	50	52		1	105	62-126	11/08/2010 2038
Trichlorofluoromethane	50	39		1	78	45-138	11/08/2010 2038
Vinyl chloride	50	30		1	60	42-132	11/08/2010 2038
Xylenes (total)	100	110		1	111	58-128	11/08/2010 2038

Surrogate	Q	% Rec	Acceptance Limit
Bromofluorobenzene		99	47-138
1,2-Dichloroethane-d4		94	53-142
Toluene-d8		103	68-124

PQL = Practical quantitation limit
ND = Not detected at or above the MDL
P = The RPD between two GC columns exceeds 40%
J = Estimated result < PQL and ≥ MDL
N - Recovery is out of criteria
+ - RPD is out of criteria

Where applicable, all soil sample analysis are reported on a dry weight basis unless flagged with a "W"

Note: Calculations are performed before rounding to avoid round-off errors in calculated results

Volatile Organic Compounds by GC/MS - LCSD

Sample ID: LQ46104-003
Batch: 46104
Analytical Method: 8260B

Matrix: Solid
Prep Method: 5035

Parameter	Spike Amount (ug/kg)	Result (ug/kg)	Q	Dil	% Rec	% RPD	% Rec Limit	% RPD Limit	Analysis Date
Acetone	100	98		1	98	14	42-149	20	11/08/2010 2206
Benzene	50	43		1	87	9.0	69-123	20	11/08/2010 2206
Bromodichloromethane	50	50		1	101	9.5	69-121	20	11/08/2010 2206
Bromoform	50	45		1	91	10	61-119	20	11/08/2010 2206
Bromomethane (Methyl bromide)	50	34		1	68	0.44	35-144	20	11/08/2010 2206
2-Butanone (MEK)	100	84		1	84	0.53	57-148	20	11/08/2010 2206
Carbon disulfide	50	38		1	76	5.9	58-122	20	11/08/2010 2206
Carbon tetrachloride	50	49		1	99	4.6	58-136	20	11/08/2010 2206
Chlorobenzene	50	48		1	95	13	59-129	20	11/08/2010 2206
Chloroethane	50	40		1	79	10	50-132	20	11/08/2010 2206
Chloroform	50	47		1	94	5.4	71-125	20	11/08/2010 2206
Chloromethane (Methyl chloride)	50	28		1	56	5.2	34-134	20	11/08/2010 2206
Cyclohexane	50	43		1	87	1.8	53-139	20	11/08/2010 2206
1,2-Dibromo-3-chloropropane (DBCP)	50	47		1	94	17	55-125	20	11/08/2010 2206
Dibromochloromethane	50	47		1	94	13	66-119	20	11/08/2010 2206
1,2-Dibromoethane (EDB)	50	47		1	94	16	74-124	20	11/08/2010 2206
1,4-Dichlorobenzene	50	51		1	102	20	52-133	20	11/08/2010 2206
1,3-Dichlorobenzene	50	49		1	98	17	51-134	20	11/08/2010 2206
1,2-Dichlorobenzene	50	46		1	93	16	57-131	20	11/08/2010 2206
Dichlorodifluoromethane	50	34		1	69	9.3	10-157	20	11/08/2010 2206
1,2-Dichloroethane	50	44		1	88	11	67-129	20	11/08/2010 2206
1,1-Dichloroethane	50	43		1	87	4.4	71-127	20	11/08/2010 2206
trans-1,2-Dichloroethene	50	45		1	89	1.1	68-131	20	11/08/2010 2206
cis-1,2-Dichloroethene	50	45		1	89	4.8	70-122	20	11/08/2010 2206
1,1-Dichloroethene	50	43		1	85	1.5	69-138	20	11/08/2010 2206
1,2-Dichloropropane	50	46		1	92	8.9	72-124	20	11/08/2010 2206
trans-1,3-Dichloropropene	50	49		1	97	18	70-124	20	11/08/2010 2206
cis-1,3-Dichloropropene	50	48		1	95	12	70-126	20	11/08/2010 2206
Ethylbenzene	50	50		1	100	11	59-128	20	11/08/2010 2206
2-Hexanone	100	92		1	92	11	54-137	20	11/08/2010 2206
Isopropylbenzene	50	51		1	103	16	50-136	20	11/08/2010 2206
Methyl acetate	50	40		1	79	0.85	59-137	20	11/08/2010 2206
Methyl tertiary butyl ether (MTBE)	50	40		1	81	2.3	72-122	20	11/08/2010 2206
4-Methyl-2-pentanone	100	91		1	91	3.4	60-134	20	11/08/2010 2206
Methylcyclohexane	50	50		1	99	1.6	41-144	20	11/08/2010 2206
Methylene chloride	50	40		1	81	2.7	77-129	20	11/08/2010 2206
Styrene	50	51		1	102	13	54-136	20	11/08/2010 2206
1,1,2,2-Tetrachloroethane	50	46		1	92	18	69-132	20	11/08/2010 2206
Tetrachloroethene	50	54		1	107	16	70-130	20	11/08/2010 2206
Toluene	50	48		1	96	4.7	61-129	20	11/08/2010 2206
1,1,2-Trichloro-1,2,2-Trifluoroethane	50	45		1	90	10	49-136	20	11/08/2010 2206
1,2,4-Trichlorobenzene	50	53		1	105	16	34-145	20	11/08/2010 2206
1,1,2-Trichloroethane	50	46		1	92	17	55-128	20	11/08/2010 2206
1,1,1-Trichloroethane	50	47		1	93	3.1	63-128	20	11/08/2010 2206

PQL = Practical quantitation limit
ND = Not detected at or above the MDL
P = The RPD between two GC columns exceeds 40%
J = Estimated result < PQL and ≥ MDL
N - Recovery is out of criteria
+ - RPD is out of criteria

Where applicable, all soil sample analysis are reported on a dry weight basis unless flagged with a "W"

Note: Calculations are performed before rounding to avoid round-off errors in calculated results

Volatile Organic Compounds by GC/MS - LCSD

Sample ID: LQ46104-003
Batch: 46104
Analytical Method: 8260B

Matrix: Solid
Prep Method: 5035

Parameter	Spike Amount (ug/kg)	Result (ug/kg)	Q	Dil	% Rec	% RPD	% Rec Limit	% RPD Limit	Analysis Date
Trichloroethene	50	48		1	96	9.1	62-126	20	11/08/2010 2206
Trichlorofluoromethane	50	41		1	82	4.8	45-138	20	11/08/2010 2206
Vinyl chloride	50	33		1	66	9.5	42-132	20	11/08/2010 2206
Xylenes (total)	100	99		1	99	11	58-128	20	11/08/2010 2206

Surrogate	Q	% Rec	Acceptance Limit
Bromofluorobenzene		107	47-138
1,2-Dichloroethane-d4		99	53-142
Toluene-d8		113	68-124

PQL = Practical quantitation limit
ND = Not detected at or above the MDL
P = The RPD between two GC columns exceeds 40%
J = Estimated result < PQL and ≥ MDL
N - Recovery is out of criteria
+ - RPD is out of criteria

Where applicable, all soil sample analysis are reported on a dry weight basis unless flagged with a "W"

Note: Calculations are performed before rounding to avoid round-off errors in calculated results

Volatile Organic Compounds by GC/MS - MB

Sample ID: LQ46137-001
Batch: 46137
Analytical Method: 8260B

Matrix: Aqueous
Prep Method: 5030B

Parameter	Result	Q	Dil	PQL	MDL	Units	Analysis Date
Acetone	ND		1	10	3.3	ug/L	11/09/2010 0017
Benzene	ND		1	0.50	0.027	ug/L	11/09/2010 0017
Bromodichloromethane	ND		1	0.50	0.17	ug/L	11/09/2010 0017
Bromoform	ND		1	0.50	0.010	ug/L	11/09/2010 0017
Bromomethane (Methyl bromide)	ND		1	0.50	0.20	ug/L	11/09/2010 0017
2-Butanone (MEK)	ND		1	10	2.0	ug/L	11/09/2010 0017
Carbon disulfide	ND		1	0.50	0.097	ug/L	11/09/2010 0017
Carbon tetrachloride	ND		1	0.50	0.085	ug/L	11/09/2010 0017
Chlorobenzene	ND		1	0.50	0.17	ug/L	11/09/2010 0017
Chloroethane	ND		1	0.50	0.17	ug/L	11/09/2010 0017
Chloroform	ND		1	0.50	0.17	ug/L	11/09/2010 0017
Chloromethane (Methyl chloride)	ND		1	0.50	0.17	ug/L	11/09/2010 0017
Cyclohexane	ND		1	0.50	0.30	ug/L	11/09/2010 0017
1,2-Dibromo-3-chloropropane (DBCP)	ND		1	0.50	0.069	ug/L	11/09/2010 0017
Dibromochloromethane	ND		1	0.50	0.17	ug/L	11/09/2010 0017
1,2-Dibromoethane (EDB)	ND		1	0.50	0.061	ug/L	11/09/2010 0017
1,4-Dichlorobenzene	ND		1	0.50	0.17	ug/L	11/09/2010 0017
1,2-Dichlorobenzene	ND		1	0.50	0.17	ug/L	11/09/2010 0017
1,3-Dichlorobenzene	ND		1	0.50	0.17	ug/L	11/09/2010 0017
Dichlorodifluoromethane	ND		1	0.50	0.071	ug/L	11/09/2010 0017
1,2-Dichloroethane	ND		1	0.50	0.023	ug/L	11/09/2010 0017
1,1-Dichloroethane	ND		1	0.50	0.054	ug/L	11/09/2010 0017
cis-1,2-Dichloroethene	ND		1	0.50	0.087	ug/L	11/09/2010 0017
1,1-Dichloroethene	ND		1	0.50	0.094	ug/L	11/09/2010 0017
trans-1,2-Dichloroethene	ND		1	0.50	0.079	ug/L	11/09/2010 0017
1,2-Dichloropropane	ND		1	0.50	0.081	ug/L	11/09/2010 0017
cis-1,3-Dichloropropene	ND		1	0.50	0.090	ug/L	11/09/2010 0017
trans-1,3-Dichloropropene	ND		1	0.50	0.18	ug/L	11/09/2010 0017
Ethylbenzene	ND		1	0.50	0.17	ug/L	11/09/2010 0017
2-Hexanone	ND		1	10	0.27	ug/L	11/09/2010 0017
Isopropylbenzene	ND		1	0.50	0.029	ug/L	11/09/2010 0017
Methyl acetate	ND		1	1.0	0.30	ug/L	11/09/2010 0017
Methyl tertiary butyl ether (MTBE)	ND		1	0.50	0.019	ug/L	11/09/2010 0017
4-Methyl-2-pentanone	ND		1	10	0.31	ug/L	11/09/2010 0017
Methylcyclohexane	ND		1	5.0	0.95	ug/L	11/09/2010 0017
Methylene chloride	ND		1	0.50	0.17	ug/L	11/09/2010 0017
Styrene	ND		1	0.50	0.015	ug/L	11/09/2010 0017
1,1,2,2-Tetrachloroethane	ND		1	0.50	0.013	ug/L	11/09/2010 0017
Tetrachloroethene	ND		1	0.50	0.014	ug/L	11/09/2010 0017
Toluene	0.49	J	1	0.50	0.17	ug/L	11/09/2010 0017
1,1,2-Trichloro-1,2,2-Trifluoroethane	ND		1	0.50	0.30	ug/L	11/09/2010 0017
1,2,4-Trichlorobenzene	ND		1	0.50	0.17	ug/L	11/09/2010 0017
1,1,2-Trichloroethane	ND		1	0.50	0.031	ug/L	11/09/2010 0017
1,1,1-Trichloroethane	ND		1	0.50	0.029	ug/L	11/09/2010 0017

PQL = Practical quantitation limit
ND = Not detected at or above the MDL
P = The RPD between two GC columns exceeds 40%
J = Estimated result < PQL and ≥ MDL
N - Recovery is out of criteria
+ - RPD is out of criteria

Where applicable, all soil sample analysis are reported on a dry weight basis unless flagged with a "W"

Note: Calculations are performed before rounding to avoid round-off errors in calculated results

Volatile Organic Compounds by GC/MS - MB

Sample ID: LQ46137-001
Batch: 46137
Analytical Method: 8260B

Matrix: Aqueous
Prep Method: 5030B

Parameter	Result	Q	Dil	PQL	MDL	Units	Analysis Date
Trichloroethene	ND		1	0.50	0.024	ug/L	11/09/2010 0017
Trichlorofluoromethane	ND		1	0.50	0.051	ug/L	11/09/2010 0017
Vinyl chloride	ND		1	0.50	0.065	ug/L	11/09/2010 0017
Xylenes (total)	ND		1	0.50	0.17	ug/L	11/09/2010 0017

Surrogate	Q	% Rec	Acceptance Limit
Bromofluorobenzene		88	70-130
1,2-Dichloroethane-d4		83	70-130
Toluene-d8		97	70-130

PQL = Practical quantitation limit
ND = Not detected at or above the MDL
P = The RPD between two GC columns exceeds 40%
J = Estimated result < PQL and ≥ MDL
N - Recovery is out of criteria
+ - RPD is out of criteria

Where applicable, all soil sample analysis are reported on a dry weight basis unless flagged with a "W"

Note: Calculations are performed before rounding to avoid round-off errors in calculated results

Volatile Organic Compounds by GC/MS - LCS

Sample ID: LQ46137-002
Batch: 46137
Analytical Method: 8260B

Matrix: Aqueous
Prep Method: 5030B

Parameter	Spike Amount (ug/L)	Result (ug/L)	Q	Dil	% Rec	% Rec Limit	Analysis Date
Acetone	100	98		1	98	46-153	11/08/2010 2235
Benzene	50	52		1	105	70-130	11/08/2010 2235
Bromodichloromethane	50	57		1	114	70-130	11/08/2010 2235
Bromoform	50	58		1	117	70-130	11/08/2010 2235
Bromomethane (Methyl bromide)	50	38		1	76	60-140	11/08/2010 2235
2-Butanone (MEK)	100	110		1	107	60-140	11/08/2010 2235
Carbon disulfide	50	42		1	84	60-140	11/08/2010 2235
Carbon tetrachloride	50	49		1	99	70-130	11/08/2010 2235
Chlorobenzene	50	59		1	118	70-130	11/08/2010 2235
Chloroethane	50	40		1	80	42-163	11/08/2010 2235
Chloroform	50	52		1	105	70-130	11/08/2010 2235
Chloromethane (Methyl chloride)	50	34		1	68	20-158	11/08/2010 2235
Cyclohexane	50	46		1	92	70-130	11/08/2010 2235
1,2-Dibromo-3-chloropropane (DBCP)	50	54		1	108	70-130	11/08/2010 2235
Dibromochloromethane	50	61		1	122	70-130	11/08/2010 2235
1,2-Dibromoethane (EDB)	50	64		1	127	70-130	11/08/2010 2235
1,4-Dichlorobenzene	50	59		1	118	70-130	11/08/2010 2235
1,2-Dichlorobenzene	50	61		1	122	70-130	11/08/2010 2235
1,3-Dichlorobenzene	50	63		1	125	70-130	11/08/2010 2235
Dichlorodifluoromethane	50	39		1	77	60-140	11/08/2010 2235
1,2-Dichloroethane	50	51		1	101	70-130	11/08/2010 2235
1,1-Dichloroethane	50	49		1	99	70-130	11/08/2010 2235
cis-1,2-Dichloroethene	50	53		1	107	70-130	11/08/2010 2235
1,1-Dichloroethene	50	47		1	94	70-130	11/08/2010 2235
trans-1,2-Dichloroethene	50	50		1	101	70-130	11/08/2010 2235
1,2-Dichloropropane	50	56		1	111	70-130	11/08/2010 2235
cis-1,3-Dichloropropene	50	56		1	112	70-130	11/08/2010 2235
trans-1,3-Dichloropropene	50	55		1	110	70-130	11/08/2010 2235
Ethylbenzene	50	62		1	124	70-130	11/08/2010 2235
2-Hexanone	100	110		1	114	60-140	11/08/2010 2235
Isopropylbenzene	50	64		1	127	70-130	11/08/2010 2235
Methyl acetate	50	48		1	95	15-128	11/08/2010 2235
Methyl tertiary butyl ether (MTBE)	50	51		1	103	70-130	11/08/2010 2235
4-Methyl-2-pentanone	100	110		1	114	60-140	11/08/2010 2235
Methylcyclohexane	50	52		1	105	70-130	11/08/2010 2235
Methylene chloride	50	45		1	89	70-130	11/08/2010 2235
Styrene	50	59		1	117	70-130	11/08/2010 2235
1,1,2,2-Tetrachloroethane	50	63		1	126	70-130	11/08/2010 2235
Tetrachloroethene	50	60		1	119	70-130	11/08/2010 2235
Toluene	50	50		1	100	70-130	11/08/2010 2235
1,1,2-Trichloro-1,2,2-Trifluoroethane	50	53		1	106	70-130	11/08/2010 2235
1,2,4-Trichlorobenzene	50	61		1	121	70-130	11/08/2010 2235
1,1,2-Trichloroethane	50	62		1	124	70-130	11/08/2010 2235
1,1,1-Trichloroethane	50	50		1	100	70-130	11/08/2010 2235

PQL = Practical quantitation limit
ND = Not detected at or above the MDL
P = The RPD between two GC columns exceeds 40%
J = Estimated result < PQL and ≥ MDL
N - Recovery is out of criteria
+ - RPD is out of criteria

Where applicable, all soil sample analysis are reported on a dry weight basis unless flagged with a "W"

Note: Calculations are performed before rounding to avoid round-off errors in calculated results

Volatile Organic Compounds by GC/MS - LCS

Sample ID: LQ46137-002
Batch: 46137
Analytical Method: 8260B

Matrix: Aqueous
Prep Method: 5030B

Parameter	Spike Amount (ug/L)	Result (ug/L)	Q	Dil	% Rec	% Rec Limit	Analysis Date
Trichloroethene	50	56		1	113	70-130	11/08/2010 2235
Trichlorofluoromethane	50	42		1	84	60-140	11/08/2010 2235
Vinyl chloride	50	39		1	77	60-140	11/08/2010 2235
Xylenes (total)	100	120		1	125	70-130	11/08/2010 2235

Surrogate	Q	% Rec	Acceptance Limit
Bromofluorobenzene		98	70-130
1,2-Dichloroethane-d4		81	70-130
Toluene-d8		101	70-130

PQL = Practical quantitation limit
ND = Not detected at or above the MDL
P = The RPD between two GC columns exceeds 40%
J = Estimated result < PQL and ≥ MDL
N - Recovery is out of criteria
+ - RPD is out of criteria

Where applicable, all soil sample analysis are reported on a dry weight basis unless flagged with a "W"

Note: Calculations are performed before rounding to avoid round-off errors in calculated results

Volatile Organic Compounds by GC/MS - LCSD

Sample ID: LQ46137-003
Batch: 46137
Analytical Method: 8260B

Matrix: Aqueous
Prep Method: 5030B

Parameter	Spike Amount (ug/L)	Result (ug/L)	Q	Dil	% Rec	% RPD	% Rec Limit	% RPD Limit	Analysis Date
Acetone	100	100		1	101	2.6	46-153	20	11/08/2010 2259
Benzene	50	51		1	101	3.5	70-130	20	11/08/2010 2259
Bromodichloromethane	50	58		1	116	1.5	70-130	20	11/08/2010 2259
Bromoform	50	61		1	122	4.5	70-130	20	11/08/2010 2259
Bromomethane (Methyl bromide)	50	34		1	69	9.5	60-140	20	11/08/2010 2259
2-Butanone (MEK)	100	110		1	111	3.7	60-140	20	11/08/2010 2259
Carbon disulfide	50	41		1	82	1.7	60-140	20	11/08/2010 2259
Carbon tetrachloride	50	48		1	96	2.5	70-130	20	11/08/2010 2259
Chlorobenzene	50	60		1	120	1.5	70-130	20	11/08/2010 2259
Chloroethane	50	36		1	72	11	42-163	20	11/08/2010 2259
Chloroform	50	54		1	109	3.7	70-130	20	11/08/2010 2259
Chloromethane (Methyl chloride)	50	31		1	61	11	20-158	20	11/08/2010 2259
Cyclohexane	50	48		1	97	5.4	70-130	20	11/08/2010 2259
1,2-Dibromo-3-chloropropane (DBCP)	50	54		1	108	0.046	70-130	20	11/08/2010 2259
Dibromochloromethane	50	62		1	124	1.7	70-130	20	11/08/2010 2259
1,2-Dibromoethane (EDB)	50	64		1	127	0.13	70-130	20	11/08/2010 2259
1,4-Dichlorobenzene	50	60		1	119	0.74	70-130	20	11/08/2010 2259
1,2-Dichlorobenzene	50	61		1	122	0.19	70-130	20	11/08/2010 2259
1,3-Dichlorobenzene	50	62		1	123	1.9	70-130	20	11/08/2010 2259
Dichlorodifluoromethane	50	37		1	75	3.1	60-140	20	11/08/2010 2259
1,2-Dichloroethane	50	49		1	99	2.5	70-130	20	11/08/2010 2259
1,1-Dichloroethane	50	50		1	99	0.47	70-130	20	11/08/2010 2259
cis-1,2-Dichloroethene	50	55		1	110	2.7	70-130	20	11/08/2010 2259
1,1-Dichloroethene	50	48		1	96	2.4	70-130	20	11/08/2010 2259
trans-1,2-Dichloroethene	50	49		1	99	1.5	70-130	20	11/08/2010 2259
1,2-Dichloropropane	50	51		1	102	8.9	70-130	20	11/08/2010 2259
cis-1,3-Dichloropropene	50	49		1	98	13	70-130	20	11/08/2010 2259
trans-1,3-Dichloropropene	50	50		1	100	9.4	70-130	20	11/08/2010 2259
Ethylbenzene	50	61		1	121	2.0	70-130	20	11/08/2010 2259
2-Hexanone	100	110		1	110	3.9	60-140	20	11/08/2010 2259
Isopropylbenzene	50	62		1	123	3.1	70-130	20	11/08/2010 2259
Methyl acetate	50	48		1	95	0.015	15-128	20	11/08/2010 2259
Methyl tertiary butyl ether (MTBE)	50	51		1	102	0.41	70-130	20	11/08/2010 2259
4-Methyl-2-pentanone	100	95		1	95	19	60-140	20	11/08/2010 2259
Methylcyclohexane	50	52		1	105	0.11	70-130	20	11/08/2010 2259
Methylene chloride	50	46		1	92	2.4	70-130	20	11/08/2010 2259
Styrene	50	61		1	122	3.4	70-130	20	11/08/2010 2259
1,1,2,2-Tetrachloroethane	50	60		1	120	4.4	70-130	20	11/08/2010 2259
Tetrachloroethene	50	58		1	116	2.7	70-130	20	11/08/2010 2259
Toluene	50	42		1	84	18	70-130	20	11/08/2010 2259
1,1,2-Trichloro-1,2,2-Trifluoroethane	50	54		1	108	1.3	70-130	20	11/08/2010 2259
1,2,4-Trichlorobenzene	50	61		1	121	0.076	70-130	20	11/08/2010 2259
1,1,2-Trichloroethane	50	58		1	116	6.9	70-130	20	11/08/2010 2259
1,1,1-Trichloroethane	50	49		1	99	1.7	70-130	20	11/08/2010 2259

PQL = Practical quantitation limit
ND = Not detected at or above the MDL
P = The RPD between two GC columns exceeds 40%
J = Estimated result < PQL and ≥ MDL
N - Recovery is out of criteria
+ - RPD is out of criteria

Where applicable, all soil sample analysis are reported on a dry weight basis unless flagged with a "W"

Note: Calculations are performed before rounding to avoid round-off errors in calculated results

Volatile Organic Compounds by GC/MS - LCSD

Sample ID: LQ46137-003
Batch: 46137
Analytical Method: 8260B

Matrix: Aqueous
Prep Method: 5030B

Parameter	Spike Amount (ug/L)	Result (ug/L)	Q	Dil	% Rec	% RPD	% Rec Limit	% RPD Limit	Analysis Date
Trichloroethene	50	56		1	113	0.18	70-130	20	11/08/2010 2259
Trichlorofluoromethane	50	40		1	81	3.9	60-140	20	11/08/2010 2259
Vinyl chloride	50	34		1	68	13	60-140	20	11/08/2010 2259
Xylenes (total)	100	130		1	126	0.96	70-130	20	11/08/2010 2259

Surrogate	Q	% Rec	Acceptance Limit
Bromofluorobenzene		98	70-130
1,2-Dichloroethane-d4		80	70-130
Toluene-d8		85	70-130

PQL = Practical quantitation limit
ND = Not detected at or above the MDL
P = The RPD between two GC columns exceeds 40%
J = Estimated result < PQL and ≥ MDL
N - Recovery is out of criteria
+ - RPD is out of criteria

Where applicable, all soil sample analysis are reported on a dry weight basis unless flagged with a "W"

Note: Calculations are performed before rounding to avoid round-off errors in calculated results

SHEALY **Chain of Custody Record**

SHEALY ENVIRONMENTAL SERVICES, INC.
106 Vantage Point Drive
West Columbia, South Carolina 29172
Telephone No. (803) 791-9700 Fax No. (803) 791-9111

Number 107607

Client: ARCADIS	Report to Contact: SHELLEY GIBBONS	Telephone No. / Fax No. / E-mail: shelley.gibbons@ARCADIS-US.com 919-854-1282/919-854-5448	Quote No.
Address: 801 Corporate Center Drive SUITE 300	Sampler's Signature: [signature]	Waybill No.: FED-EX	Page ___ of ___
City: RALEIGH State: NC Zip Code: 27607	Printed Name: Charles Lawson	Analysis (Attach list if more space is needed.)	
Project Name: FORT STEWART FST-39			
Project No.: GP09HAFS.F39A.DG0FI P.O. No.			Lot No.: LK04014

Sample ID / Description (Containers for each sample may be combined on one line.)	Date	Time	G=Grab C=Composite	Matrix: Aqueous	Matrix: Solid	Matrix: Non-Aqueous	No. of Containers by Preservative Type: Unpres.	H2SO4	HNO3	HCl	NaOH	5035 Kit	8260B VOC 40 ml	Remarks / Cooler I.D.
D-25 (42-46')	11/2/2010	16:20	G	X						3			X	
C-12 (30-34')	11/3/2010	8:57	G	X						3			X	
C-12 (36-40')	11/3/2010	9:22	G	X						3			X	
C-12 (42-46')	11/3/2010	10:25	G	X						3			X	VERY MUDDY
B-5 (30-34')	11/3/2010	12:22	G	X						3			X	
B-5 (36-40')	11/3/2012	14:23	G	X						3			X	
B-5 (42-46')	11/3/2012	14:57	G	X						3			X	
TRIP BLANK										3			X	

Possible Hazard Identification: ☑ Non-Hazard ☐ Flammable ☐ Skin Irritant ☐ Poison ☐ Unknown

Sample Disposal: ☐ Return to Client ☒ Disposal by Lab

Note: All samples are retained for six weeks from receipt unless other arrangements are made.

Turn Around Time Required (Prior lab approval required for expedited TAT.): ☐ Standard ☒ Rush (Specify) 24 HR TAT

QC Requirements (Specify)

	Date	Time		Date	Time
1. Relinquished by: [signature]	11/3/2010	16:00	1. Received by		
2. Relinquished by			2. Received by		
3. Relinquished by: FEDEX	11/4/10	0955	3. Laboratory received by: [signature]	11/4/10	0955

Comments

LAB USE ONLY
Received on Ice (Circle) (Yes) No Ice Pack
Receipt Temp. 3.0 °C

DISTRIBUTION: WHITE & YELLOW-Return to laboratory with Sample(s); PINK-Field/Client Copy

Document Number: F-AD-012 Effective Date: 08-04-02

Shealy Environmental Services, Inc.
Document Number: F-AD-016
Revision Number: 6

Page 1 of 1
Replaces Date: 09/22/06
Effective Date: 05/29/07

Sample Receipt Checklist (SRC)

Client: Arcadis Cooler Inspected by/date: GC 11/4/10 Lot #: LK0406

Means of receipt: ☐ SESI ☐ Client ☐ UPS ☑ FedEx ☐ Airborne Exp ☐ Other

Yes ☑	No ☐	NA ☐	1. Were custody seals present on the cooler?
Yes ☑	No ☐	NA ☐	2. If custody seals were present, were they intact and unbroken?

Cooler ID/temperature upon receipt 3 0 °C / °C / °C / °C
/ °C / °C / °C / °C

Method: ☐ Temperature Blank ☑ Against Bottles
Method of coolant: ☑ Wet Ice ☐ Blue Ice ☐ Dry Ice ☐ None

If response is No (or Yes for 14, 15, 16), an explanation/resolution must be provided.

Yes ☐	No ☐	NA ☑	3. If temperature of any cooler exceeded 6.0°C, was Project Manager notified? PM notified by SRC, phone, note (circle one), other:_____. (For coolers received via commercial courier, PMs are to be notified immediately.
Yes ☑	No ☐	NA ☐	4. Is the commercial courier's packing slip attached to this form?
Yes ☐	No ☑	NA ☐	5. Were proper custody procedures (relinquished/received) followed?
Yes ☑	No ☐	NA ☐	6. Were sample IDs listed?
Yes ☑	No ☐	NA ☐	7. Was collection date & time listed?
Yes ☑	No ☐	NA ☐	8. Were tests to be performed listed on the COC or was quote # provided?
Yes ☑	No ☐	NA ☐	9. Did all samples arrive in the proper containers for each test?
Yes ☑	No ☐	NA ☐	10. Did all container label information (ID, date, time) agree with COC?
Yes ☑	No ☐	NA ☐	11. Did all containers arrive in good condition (unbroken, lids on, etc.)?
Yes ☑	No ☐	NA ☐	12. Was adequate sample volume available?
Yes ☑	No ☐	NA ☐	13. Were all samples received within ½ the holding time or 48 hours, whichever comes first?
Yes ☐	No ☑	NA ☐	14. Were any samples containers missing?
Yes ☑	No ☒	NA ☐	15. Were there any excess samples not listed on COC? Trip Blank
Yes ☑	No ☐	NA ☐	16. Were bubbles present >"pea-size" (¼"or 6mm in diameter) in any VOA vials?
Yes ☐	No ☐	NA ☑	17. Were all metals/O&G/HEM/nutrient samples received at a pH of <2?
Yes ☐	No ☐	NA ☑	18. Were all cyanide and/or sulfide samples received at a pH >12?
Yes ☐	No ☐	NA ☑	19. Were all applicable NH3/TKN/cyanide/phenol/BNA/pest/PCB/herb (<0.2mg/L) and toxicity (<0.1mg/L) samples free of residual chlorine?
Yes ☐	No ☐	NA ☑	20. Were collection temperatures documented on the COC for NC samples?

Sample Preservation (Must be completed for any sample(s) incorrectly preserved or with headspace.)

Sample(s)_____ were received incorrectly preserved and were adjusted accordingly in sample receiving with _____ (H_2SO_4,HNO_3,HCl,NaOH) with the SR # (number)

Sample(s) -003 (2), -001(6), -005(2) were received with bubbles >6 mm in diameter.

Sample(s)_____ were received with TRC >0.2 mg/L for NH3/TKN/cyanide/BNA/pest/PCB/herb.

Toxicity sample(s)_____ analyzed by method 330.5.

Corrective Action taken, if necessary:
Was client notified: Yes ☐ No ☐
SESI employee:_____
Comments:_____

This portion can be removed for Recipient's records.
FedEx Tracking Number 873003045491
11/3/2010
Charles Lawson Phone 706 828-4421
Company ARCADIS
Address 1450 GREENE ST STE 220
AUGUSTA State GA ZIP 30901-52
Your Internal Billing Reference GP09HAFS.F39A.D60

Report of Analysis

ARCADIS U.S., Inc.
30 Patewood Drive
Suite 155
Greenville, SC 29615
Attention: Chase Forman

Project Name: Hunter Stewart SWMU39

Project Number: GP08HAFS.F39A.DG0F1

Lot Number: LC20005

Date Completed: 03/26/2010

Nisreen Saikaly
Project Manager

This report shall not be reproduced, except in its entirety, without the written approval of Shealy Environmental Services, Inc.

The following non-paginated documents are considered part of this report: Chain of Custody Record and Sample Receipt Checklist.

* L C 2 0 0 0 5 *

Case Narrative
ARCADIS U.S., Inc.
Lot Number: LC20005

This Report of Analysis contains the analytical result(s) for the sample(s) listed on the Sample Summary following this Case Narrative. The sample receiving date is documented in the header information associated with each sample.

Sample receipt, sample analysis, and data review have been performed in accordance with the most current approved NELAC standards, the Shealy Environmental Services, Inc. ("Shealy") Quality Assurance Management Plan (QAMP), standard operating procedures (SOPs), and Shealy policies. Any exceptions to the NELAC standards, the QAMP, SOPs or policies are qualified on the results page or discussed below.

If you have any questions regarding this report please contact the Shealy Project Manager listed on the cover page.

Volatile Organic Compounds

The RPD for Trichlorofluoromethane exceeded method control limits in batch 30000; however, all other QA/QC criteria for the LCS/LCSD were within acceptance criteria and method control limits. The associated sample results were reported and no corrective action was required.

Semivolatile Organic Compounds

The LCS recovery for 4-Chloroaniline was outside method control limits in batch 29900. The LCSD results were within limits. Therefore the associated sample results were reported and no corrective action was required.

Sample Summary

ARCADIS U.S., Inc.

Lot Number: LC20005

Sample Number	Sample ID	Matrix	Date Sampled	Date Received
001	F39TW01 (40-45)	Aqueous	03/18/2010 1040	03/20/2010
002	TRIP BLANK (031810)	Aqueous	03/20/2010 0850	03/20/2010

(2 samples)

Executive Summary

ARCADIS U.S., Inc.

Lot Number: LC20005

Sample	Sample ID	Matrix	Parameter	Method	Result	Q	Units	Page
001	F39TW01 (40-45)	Aqueous	Acetone	8260B	6.9	J	ug/L	5
001	F39TW01 (40-45)	Aqueous	Carbon disulfide	8260B	0.27	BJ	ug/L	5
001	F39TW01 (40-45)	Aqueous	Toluene	8260B	0.17	J	ug/L	5
002	TRIP BLANK (031810)	Aqueous	Acetone	8260B	4.6	J	ug/L	9
002	TRIP BLANK (031810)	Aqueous	Carbon disulfide	8260B	0.17	BJ	ug/L	9

(5 detections)

Volatile Organic Compounds by GC/MS

Client: ARCADIS U.S., Inc.
Laboratory ID: LC20005-001
Description: F39TW01 (40-45)
Matrix: Aqueous
Date Sampled: 03/18/2010 1040
Date Received: 03/20/2010

Run	Prep Method	Analytical Method	Dilution	Analysis Date	Analyst	Prep Date	Batch
1	5030B	8260B	1	03/23/2010 0548	DLB		30000

Parameter	CAS Number	Analytical Method	Result	Q	PQL	MDL	Units	Run
Acetone	67-64-1	8260B	6.9	J	10	0.061	ug/L	1
Benzene	71-43-2	8260B	ND		0.50	0.027	ug/L	1
Bromodichloromethane	75-27-4	8260B	ND		0.50	0.17	ug/L	1
Bromoform	75-25-2	8260B	ND		0.50	0.010	ug/L	1
Bromomethane (Methyl bromide)	74-83-9	8260B	ND		0.50	0.20	ug/L	1
2-Butanone (MEK)	78-93-3	8260B	ND		10	2.0	ug/L	1
Carbon disulfide	75-15-0	8260B	0.27	BJ	0.50	0.097	ug/L	1
Carbon tetrachloride	56-23-5	8260B	ND		0.50	0.085	ug/L	1
Chlorobenzene	108-90-7	8260B	ND		0.50	0.17	ug/L	1
Chloroethane	75-00-3	8260B	ND		0.50	0.17	ug/L	1
Chloroform	67-66-3	8260B	ND		0.50	0.17	ug/L	1
Chloromethane (Methyl chloride)	74-87-3	8260B	ND		0.50	0.17	ug/L	1
Cyclohexane	110-82-7	8260B	ND		0.50	0.30	ug/L	1
1,2-Dibromo-3-chloropropane (DBCP)	96-12-8	8260B	ND		0.50	0.069	ug/L	1
Dibromochloromethane	124-48-1	8260B	ND		0.50	0.17	ug/L	1
1,2-Dibromoethane (EDB)	106-93-4	8260B	ND		0.50	0.061	ug/L	1
1,3-Dichlorobenzene	541-73-1	8260B	ND		0.50	0.17	ug/L	1
1,2-Dichlorobenzene	95-50-1	8260B	ND		0.50	0.17	ug/L	1
1,4-Dichlorobenzene	106-46-7	8260B	ND		0.50	0.17	ug/L	1
Dichlorodifluoromethane	75-71-8	8260B	ND		0.50	0.071	ug/L	1
1,1-Dichloroethane	75-34-3	8260B	ND		0.50	0.054	ug/L	1
1,2-Dichloroethane	107-06-2	8260B	ND		0.50	0.023	ug/L	1
trans-1,2-Dichloroethene	156-60-5	8260B	ND		0.50	0.079	ug/L	1
1,1-Dichloroethene	75-35-4	8260B	ND		0.50	0.094	ug/L	1
cis-1,2-Dichloroethene	156-59-2	8260B	ND		0.50	0.087	ug/L	1
1,2-Dichloropropane	78-87-5	8260B	ND		0.50	0.081	ug/L	1
trans-1,3-Dichloropropene	10061-02-6	8260B	ND		0.50	0.18	ug/L	1
cis-1,3-Dichloropropene	10061-01-5	8260B	ND		0.50	0.090	ug/L	1
Ethylbenzene	100-41-4	8260B	ND		0.50	0.17	ug/L	1
2-Hexanone	591-78-6	8260B	ND		10	0.27	ug/L	1
Isopropylbenzene	98-82-8	8260B	ND		0.50	0.029	ug/L	1
Methyl acetate	79-20-9	8260B	ND		1.0	0.30	ug/L	1
Methyl tertiary butyl ether (MTBE)	1634-04-4	8260B	ND		0.50	0.019	ug/L	1
4-Methyl-2-pentanone	108-10-1	8260B	ND		10	0.31	ug/L	1
Methylcyclohexane	108-87-2	8260B	ND		5.0	0.95	ug/L	1
Methylene chloride	75-09-2	8260B	ND		0.50	0.17	ug/L	1
Styrene	100-42-5	8260B	ND		0.50	0.015	ug/L	1
1,1,2,2-Tetrachloroethane	79-34-5	8260B	ND		0.50	0.013	ug/L	1
Tetrachloroethene	127-18-4	8260B	ND		0.50	0.014	ug/L	1
Toluene	108-88-3	8260B	0.17	J	0.50	0.17	ug/L	1
1,1,2-Trichloro-1,2,2-Trifluoroethane	76-13-1	8260B	ND		0.50	0.30	ug/L	1
1,2,4-Trichlorobenzene	120-82-1	8260B	ND		0.50	0.17	ug/L	1
1,1,1-Trichloroethane	71-55-6	8260B	ND		0.50	0.029	ug/L	1
1,1,2-Trichloroethane	79-00-5	8260B	ND		0.50	0.031	ug/L	1

PQL = Practical quantitation limit
B = Detected in the method blank
E = Quantitation of compound exceeded the calibration range
ND = Not detected at or above the MDL
J = Estimated result < PQL and ≥ MDL
P = The RPD between two GC columns exceeds 40%
Where applicable, all soil sample analysis are reported on a dry weight basis unless flagged with a "W"
N = Recovery is out of criteria
H = Out of holding time

Volatile Organic Compounds by GC/MS

Client: ARCADIS U.S., Inc.
Laboratory ID: LC20005-001
Description: F39TW01 (40-45)
Matrix: Aqueous
Date Sampled: 03/18/2010 1040
Date Received: 03/20/2010

Run	Prep Method	Analytical Method	Dilution	Analysis Date	Analyst	Prep Date	Batch
1	5030B	8260B	1	03/23/2010 0548	DLB		30000

Parameter	CAS Number	Analytical Method	Result	Q	PQL	MDL	Units	Run
Trichloroethene	79-01-6	8260B	ND		0.50	0.024	ug/L	1
Trichlorofluoromethane	75-69-4	8260B	ND		0.50	0.051	ug/L	1
Vinyl chloride	75-01-4	8260B	ND		0.50	0.065	ug/L	1
Xylenes (total)	1330-20-7	8260B	ND		0.50	0.17	ug/L	1

Surrogate	Q	Run 1 % Recovery	Acceptance Limits
1,2-Dichloroethane-d4		110	70-130
Bromofluorobenzene		102	70-130
Toluene-d8		104	70-130

PQL = Practical quantitation limit
B = Detected in the method blank
E = Quantitation of compound exceeded the calibration range
ND = Not detected at or above the MDL
J = Estimated result < PQL and ≥ MDL
P = The RPD between two GC columns exceeds 40%
Where applicable, all soil sample analysis are reported on a dry weight basis unless flagged with a "W"
N = Recovery is out of criteria
H = Out of holding time

Semivolatile Organic Compounds by GC/MS

Client: ARCADIS U.S., Inc.
Laboratory ID: LC20005-001
Description: F39TW01 (40-45)
Matrix: Aqueous
Date Sampled: 03/18/2010 1040
Date Received: 03/20/2010

Run	Prep Method	Analytical Method	Dilution	Analysis Date	Analyst	Prep Date	Batch
1	3520C	8270D	1	03/25/2010 1519	JGH	03/22/2010 2035	29900

Parameter	CAS Number	Analytical Method	Result	Q	PQL	MDL	Units	Run
Acenaphthene	83-32-9	8270D	ND		1.0	0.094	ug/L	1
Acenaphthylene	208-96-8	8270D	ND		1.0	0.17	ug/L	1
Acetophenone	98-86-2	8270D	ND		1.0	0.33	ug/L	1
Anthracene	120-12-7	8270D	ND		1.0	0.14	ug/L	1
Atrazine	1912-24-9	8270D	ND		1.0	0.21	ug/L	1
Benzaldehyde	100-52-7	8270D	ND		5.2	1.0	ug/L	1
Benzo(a)anthracene	56-55-3	8270D	ND		1.0	0.16	ug/L	1
Benzo(a)pyrene	50-32-8	8270D	ND		1.0	0.17	ug/L	1
Benzo(b)fluoranthene	205-99-2	8270D	ND		1.0	0.21	ug/L	1
Benzo(g,h,i)perylene	191-24-2	8270D	ND		1.0	0.24	ug/L	1
Benzo(k)fluoranthene	207-08-9	8270D	ND		1.0	0.13	ug/L	1
1,1'-Biphenyl	92-52-4	8270D	ND		1.0	0.21	ug/L	1
4-Bromophenyl phenyl ether	101-55-3	8270D	ND		1.0	0.13	ug/L	1
Butyl benzyl phthalate	85-68-7	8270D	ND		5.2	1.8	ug/L	1
Caprolactam	105-60-2	8270D	ND		5.2	1.3	ug/L	1
Carbazole	86-74-8	8270D	ND		1.0	0.26	ug/L	1
4-Chloro-3-methyl phenol	59-50-7	8270D	ND		1.0	0.23	ug/L	1
4-Chloroaniline	106-47-8	8270D	ND		1.0	0.14	ug/L	1
bis(2-Chloroethoxy)methane	111-91-1	8270D	ND		1.0	0.14	ug/L	1
bis(2-Chloroethyl)ether	111-44-4	8270D	ND		1.0	0.14	ug/L	1
bis(2-Chloroisopropyl)ether	108-60-1	8270D	ND		1.0	0.083	ug/L	1
2-Chloronaphthalene	91-58-7	8270D	ND		1.0	0.13	ug/L	1
2-Chlorophenol	95-57-8	8270D	ND		1.0	0.14	ug/L	1
4-Chlorophenyl phenyl ether	7005-72-3	8270D	ND		1.0	0.11	ug/L	1
Chrysene	218-01-9	8270D	ND		1.0	0.13	ug/L	1
Dibenzo(a,h)anthracene	53-70-3	8270D	ND		1.0	0.14	ug/L	1
Dibenzofuran	132-64-9	8270D	ND		1.0	0.17	ug/L	1
3,3'-Dichlorobenzidine	91-94-1	8270D	ND		5.2	0.84	ug/L	1
2,4-Dichlorophenol	120-83-2	8270D	ND		1.0	0.16	ug/L	1
Diethylphthalate	84-66-2	8270D	ND		5.2	1.8	ug/L	1
Dimethyl phthalate	131-11-3	8270D	ND		5.2	1.8	ug/L	1
2,4-Dimethylphenol	105-67-9	8270D	ND		1.0	0.32	ug/L	1
Di-n-butyl phthalate	84-74-2	8270D	ND		5.2	1.8	ug/L	1
4,6-Dinitro-2-methylphenol	534-52-1	8270D	ND		5.2	1.5	ug/L	1
2,4-Dinitrophenol	51-28-5	8270D	ND		5.2	0.26	ug/L	1
2,4-Dinitrotoluene	121-14-2	8270D	ND		2.1	0.47	ug/L	1
2,6-Dinitrotoluene	606-20-2	8270D	ND		2.1	0.42	ug/L	1
Di-n-octylphthalate	117-84-0	8270D	ND		5.2	1.8	ug/L	1
bis(2-Ethylhexyl)phthalate	117-81-7	8270D	ND		5.2	1.8	ug/L	1
Fluoranthene	206-44-0	8270D	ND		1.0	0.22	ug/L	1
Fluorene	86-73-7	8270D	ND		1.0	0.10	ug/L	1
Hexachlorobenzene	118-74-1	8270D	ND		1.0	0.22	ug/L	1
Hexachlorobutadiene	87-68-3	8270D	ND		1.0	0.094	ug/L	1
Hexachlorocyclopentadiene	77-47-4	8270D	ND		5.2	0.24	ug/L	1

PQL = Practical quantitation limit
B = Detected in the method blank
E = Quantitation of compound exceeded the calibration range
ND = Not detected at or above the MDL
J = Estimated result < PQL and ≥ MDL
P = The RPD between two GC columns exceeds 40%
Where applicable, all soil sample analysis are reported on a dry weight basis unless flagged with a "W"
N = Recovery is out of criteria
H = Out of holding time

Semivolatile Organic Compounds by GC/MS

Client: ARCADIS U.S., Inc.
Laboratory ID: LC20005-001
Description: F39TW01 (40-45)
Matrix: Aqueous
Date Sampled: 03/18/2010 1040
Date Received: 03/20/2010

Run	Prep Method	Analytical Method	Dilution	Analysis Date	Analyst	Prep Date	Batch
1	3520C	8270D	1	03/25/2010 1519	JGH	03/22/2010 2035	29900

Parameter	CAS Number	Analytical Method	Result	Q	PQL	MDL	Units	Run
Hexachloroethane	67-72-1	8270D	ND		1.0	0.11	ug/L	1
Indeno(1,2,3-c,d)pyrene	193-39-5	8270D	ND		1.0	0.24	ug/L	1
Isophorone	78-59-1	8270D	ND		1.0	0.083	ug/L	1
2-Methylnaphthalene	91-57-6	8270D	ND		1.0	0.083	ug/L	1
2-Methylphenol	95-48-7	8270D	ND		1.0	0.18	ug/L	1
3 & 4-Methylphenol	106-44-5	8270D	ND		2.1	0.59	ug/L	1
Naphthalene	91-20-3	8270D	ND		1.0	0.073	ug/L	1
2-Nitroaniline	88-74-4	8270D	ND		2.1	0.57	ug/L	1
3-Nitroaniline	99-09-2	8270D	ND		2.1	0.80	ug/L	1
4-Nitroaniline	100-01-6	8270D	ND		2.1	0.41	ug/L	1
Nitrobenzene	98-95-3	8270D	ND		1.0	0.10	ug/L	1
2-Nitrophenol	88-75-5	8270D	ND		2.1	0.28	ug/L	1
4-Nitrophenol	100-02-7	8270D	ND		5.2	0.67	ug/L	1
N-Nitrosodi-n-propylamine	621-64-7	8270D	ND		1.0	0.083	ug/L	1
N-Nitrosodiphenylamine (Diphenylamine)	86-30-6	8270D	ND		1.0	0.40	ug/L	1
Pentachlorophenol	87-86-5	8270D	ND		5.2	0.56	ug/L	1
Phenanthrene	85-01-8	8270D	ND		1.0	0.19	ug/L	1
Phenol	108-95-2	8270D	ND		1.0	0.11	ug/L	1
Pyrene	129-00-0	8270D	ND		1.0	0.17	ug/L	1
2,4,5-Trichlorophenol	95-95-4	8270D	ND		1.0	0.19	ug/L	1
2,4,6-Trichlorophenol	88-06-2	8270D	ND		1.0	0.23	ug/L	1

Surrogate	Q	Run 1 % Recovery	Acceptance Limits
2-Fluorobiphenyl		56	37-129
2-Fluorophenol		55	24-127
Nitrobenzene-d5		59	38-127
Phenol-d5		63	28-128
Terphenyl-d14		11	10-148
2,4,6-Tribromophenol		62	41-144

PQL = Practical quantitation limit
B = Detected in the method blank
E = Quantitation of compound exceeded the calibration range
ND = Not detected at or above the MDL
J = Estimated result < PQL and ≥ MDL
P = The RPD between two GC columns exceeds 40%
Where applicable, all soil sample analysis are reported on a dry weight basis unless flagged with a "W"
N = Recovery is out of criteria
H = Out of holding time

Volatile Organic Compounds by GC/MS

Client: ARCADIS U.S., Inc.
Laboratory ID: LC20005-002
Description: TRIP BLANK (031810)
Matrix: Aqueous
Date Sampled: 03/20/2010 0850
Date Received: 03/20/2010

Run	Prep Method	Analytical Method	Dilution	Analysis Date	Analyst	Prep Date	Batch
1	5030B	8260B	1	03/23/2010 0314	DLB		30000

Parameter	CAS Number	Analytical Method	Result	Q	PQL	MDL	Units	Run
Acetone	67-64-1	8260B	4.6	J	10	0.061	ug/L	1
Benzene	71-43-2	8260B	ND		0.50	0.027	ug/L	1
Bromodichloromethane	75-27-4	8260B	ND		0.50	0.17	ug/L	1
Bromoform	75-25-2	8260B	ND		0.50	0.010	ug/L	1
Bromomethane (Methyl bromide)	74-83-9	8260B	ND		0.50	0.20	ug/L	1
2-Butanone (MEK)	78-93-3	8260B	ND		10	2.0	ug/L	1
Carbon disulfide	75-15-0	8260B	0.17	BJ	0.50	0.097	ug/L	1
Carbon tetrachloride	56-23-5	8260B	ND		0.50	0.085	ug/L	1
Chlorobenzene	108-90-7	8260B	ND		0.50	0.17	ug/L	1
Chloroethane	75-00-3	8260B	ND		0.50	0.17	ug/L	1
Chloroform	67-66-3	8260B	ND		0.50	0.17	ug/L	1
Chloromethane (Methyl chloride)	74-87-3	8260B	ND		0.50	0.17	ug/L	1
Cyclohexane	110-82-7	8260B	ND		0.50	0.30	ug/L	1
1,2-Dibromo-3-chloropropane (DBCP)	96-12-8	8260B	ND		0.50	0.069	ug/L	1
Dibromochloromethane	124-48-1	8260B	ND		0.50	0.17	ug/L	1
1,2-Dibromoethane (EDB)	106-93-4	8260B	ND		0.50	0.061	ug/L	1
1,3-Dichlorobenzene	541-73-1	8260B	ND		0.50	0.17	ug/L	1
1,2-Dichlorobenzene	95-50-1	8260B	ND		0.50	0.17	ug/L	1
1,4-Dichlorobenzene	106-46-7	8260B	ND		0.50	0.17	ug/L	1
Dichlorodifluoromethane	75-71-8	8260B	ND		0.50	0.071	ug/L	1
1,1-Dichloroethane	75-34-3	8260B	ND		0.50	0.054	ug/L	1
1,2-Dichloroethane	107-06-2	8260B	ND		0.50	0.023	ug/L	1
trans-1,2-Dichloroethene	156-60-5	8260B	ND		0.50	0.079	ug/L	1
1,1-Dichloroethene	75-35-4	8260B	ND		0.50	0.094	ug/L	1
cis-1,2-Dichloroethene	156-59-2	8260B	ND		0.50	0.087	ug/L	1
1,2-Dichloropropane	78-87-5	8260B	ND		0.50	0.081	ug/L	1
trans-1,3-Dichloropropene	10061-02-6	8260B	ND		0.50	0.18	ug/L	1
cis-1,3-Dichloropropene	10061-01-5	8260B	ND		0.50	0.090	ug/L	1
Ethylbenzene	100-41-4	8260B	ND		0.50	0.17	ug/L	1
2-Hexanone	591-78-6	8260B	ND		10	0.27	ug/L	1
Isopropylbenzene	98-82-8	8260B	ND		0.50	0.029	ug/L	1
Methyl acetate	79-20-9	8260B	ND		1.0	0.30	ug/L	1
Methyl tertiary butyl ether (MTBE)	1634-04-4	8260B	ND		0.50	0.019	ug/L	1
4-Methyl-2-pentanone	108-10-1	8260B	ND		10	0.31	ug/L	1
Methylcyclohexane	108-87-2	8260B	ND		5.0	0.95	ug/L	1
Methylene chloride	75-09-2	8260B	ND		0.50	0.17	ug/L	1
Styrene	100-42-5	8260B	ND		0.50	0.015	ug/L	1
1,1,2,2-Tetrachloroethane	79-34-5	8260B	ND		0.50	0.013	ug/L	1
Tetrachloroethene	127-18-4	8260B	ND		0.50	0.014	ug/L	1
Toluene	108-88-3	8260B	ND		0.50	0.17	ug/L	1
1,1,2-Trichloro-1,2,2-Trifluoroethane	76-13-1	8260B	ND		0.50	0.30	ug/L	1
1,2,4-Trichlorobenzene	120-82-1	8260B	ND		0.50	0.17	ug/L	1
1,1,1-Trichloroethane	71-55-6	8260B	ND		0.50	0.029	ug/L	1
1,1,2-Trichloroethane	79-00-5	8260B	ND		0.50	0.031	ug/L	1

PQL = Practical quantitation limit
B = Detected in the method blank
E = Quantitation of compound exceeded the calibration range
ND = Not detected at or above the MDL
J = Estimated result < PQL and ≥ MDL
P = The RPD between two GC columns exceeds 40%
Where applicable, all soil sample analysis are reported on a dry weight basis unless flagged with a "W"
N = Recovery is out of criteria
H = Out of holding time

Volatile Organic Compounds by GC/MS

Client: ARCADIS U.S., Inc.
Laboratory ID: LC20005-002
Description: TRIP BLANK (031810)
Matrix: Aqueous
Date Sampled: 03/20/2010 0850
Date Received: 03/20/2010

Run	Prep Method	Analytical Method	Dilution	Analysis Date	Analyst	Prep Date	Batch
1	5030B	8260B	1	03/23/2010 0314	DLB		30000

Parameter	CAS Number	Analytical Method	Result	Q	PQL	MDL	Units	Run
Trichloroethene	79-01-6	8260B	ND		0.50	0.024	ug/L	1
Trichlorofluoromethane	75-69-4	8260B	ND		0.50	0.051	ug/L	1
Vinyl chloride	75-01-4	8260B	ND		0.50	0.065	ug/L	1
Xylenes (total)	1330-20-7	8260B	ND		0.50	0.17	ug/L	1

Surrogate	Q	Run 1 % Recovery	Acceptance Limits
1,2-Dichloroethane-d4		108	70-130
Bromofluorobenzene		102	70-130
Toluene-d8		101	70-130

PQL = Practical quantitation limit
B = Detected in the method blank
E = Quantitation of compound exceeded the calibration range
ND = Not detected at or above the MDL
J = Estimated result < PQL and ≥ MDL
P = The RPD between two GC columns exceeds 40%
Where applicable, all soil sample analysis are reported on a dry weight basis unless flagged with a "W"
N = Recovery is out of criteria
H = Out of holding time

QC Summary

Volatile Organic Compounds by GC/MS - MB

Sample ID: LQ30000-001
Batch: 30000
Analytical Method: 8260B

Matrix: Aqueous
Prep Method: 5030B

Parameter	Result	Q	Dil	PQL	MDL	Units	Analysis Date
Acetone	ND		1	10	0.061	ug/L	03/22/2010 2242
Benzene	ND		1	0.50	0.027	ug/L	03/22/2010 2242
Bromodichloromethane	ND		1	0.50	0.17	ug/L	03/22/2010 2242
Bromoform	ND		1	0.50	0.010	ug/L	03/22/2010 2242
Bromomethane (Methyl bromide)	ND		1	0.50	0.20	ug/L	03/22/2010 2242
2-Butanone (MEK)	ND		1	10	2.0	ug/L	03/22/2010 2242
Carbon disulfide	0.22	J	1	0.50	0.097	ug/L	03/22/2010 2242
Carbon tetrachloride	ND		1	0.50	0.085	ug/L	03/22/2010 2242
Chlorobenzene	ND		1	0.50	0.17	ug/L	03/22/2010 2242
Chloroethane	ND		1	0.50	0.17	ug/L	03/22/2010 2242
Chloroform	ND		1	0.50	0.17	ug/L	03/22/2010 2242
Chloromethane (Methyl chloride)	ND		1	0.50	0.17	ug/L	03/22/2010 2242
Cyclohexane	ND		1	0.50	0.30	ug/L	03/22/2010 2242
1,2-Dibromo-3-chloropropane (DBCP)	ND		1	0.50	0.069	ug/L	03/22/2010 2242
Dibromochloromethane	ND		1	0.50	0.17	ug/L	03/22/2010 2242
1,2-Dibromoethane (EDB)	ND		1	0.50	0.061	ug/L	03/22/2010 2242
1,2-Dichlorobenzene	ND		1	0.50	0.17	ug/L	03/22/2010 2242
1,4-Dichlorobenzene	ND		1	0.50	0.17	ug/L	03/22/2010 2242
1,3-Dichlorobenzene	ND		1	0.50	0.17	ug/L	03/22/2010 2242
Dichlorodifluoromethane	ND		1	0.50	0.071	ug/L	03/22/2010 2242
1,1-Dichloroethane	ND		1	0.50	0.054	ug/L	03/22/2010 2242
1,2-Dichloroethane	ND		1	0.50	0.023	ug/L	03/22/2010 2242
1,1-Dichloroethene	ND		1	0.50	0.094	ug/L	03/22/2010 2242
trans-1,2-Dichloroethene	ND		1	0.50	0.079	ug/L	03/22/2010 2242
cis-1,2-Dichloroethene	ND		1	0.50	0.087	ug/L	03/22/2010 2242
1,2-Dichloropropane	ND		1	0.50	0.081	ug/L	03/22/2010 2242
trans-1,3-Dichloropropene	ND		1	0.50	0.18	ug/L	03/22/2010 2242
cis-1,3-Dichloropropene	ND		1	0.50	0.090	ug/L	03/22/2010 2242
Ethylbenzene	ND		1	0.50	0.17	ug/L	03/22/2010 2242
2-Hexanone	ND		1	10	0.27	ug/L	03/22/2010 2242
Isopropylbenzene	ND		1	0.50	0.029	ug/L	03/22/2010 2242
Methyl acetate	ND		1	1.0	0.30	ug/L	03/22/2010 2242
Methyl tertiary butyl ether (MTBE)	ND		1	0.50	0.019	ug/L	03/22/2010 2242
4-Methyl-2-pentanone	ND		1	10	0.31	ug/L	03/22/2010 2242
Methylcyclohexane	ND		1	5.0	0.95	ug/L	03/22/2010 2242
Methylene chloride	ND		1	0.50	0.17	ug/L	03/22/2010 2242
Styrene	ND		1	0.50	0.015	ug/L	03/22/2010 2242
1,1,2,2-Tetrachloroethane	ND		1	0.50	0.013	ug/L	03/22/2010 2242
Tetrachloroethene	ND		1	0.50	0.014	ug/L	03/22/2010 2242
Toluene	ND		1	0.50	0.17	ug/L	03/22/2010 2242
1,1,2-Trichloro-1,2,2-Trifluoroethane	ND		1	0.50	0.30	ug/L	03/22/2010 2242
1,2,4-Trichlorobenzene	ND		1	0.50	0.17	ug/L	03/22/2010 2242
1,1,1-Trichloroethane	ND		1	0.50	0.029	ug/L	03/22/2010 2242
1,1,2-Trichloroethane	ND		1	0.50	0.031	ug/L	03/22/2010 2242

PQL = Practical quantitation limit
ND = Not detected at or above the MDL
P = The RPD between two GC columns exceeds 40%
J = Estimated result < PQL and ≥ MDL
N - Recovery is out of criteria
+ - RPD is out of criteria

Where applicable, all soil sample analysis are reported on a dry weight basis unless flagged with a "W"

Note: Calculations are performed before rounding to avoid round-off errors in calculated results

Volatile Organic Compounds by GC/MS - MB

Sample ID: LQ30000-001
Batch: 30000
Analytical Method: 8260B

Matrix: Aqueous
Prep Method: 5030B

Parameter	Result	Q	Dil	PQL	MDL	Units	Analysis Date
Trichloroethene	ND		1	0.50	0.024	ug/L	03/22/2010 2242
Trichlorofluoromethane	ND		1	0.50	0.051	ug/L	03/22/2010 2242
Vinyl chloride	ND		1	0.50	0.065	ug/L	03/22/2010 2242
Xylenes (total)	ND		1	0.50	0.17	ug/L	03/22/2010 2242

Surrogate	Q	% Rec	Acceptance Limit
Bromofluorobenzene		103	70-130
1,2-Dichloroethane-d4		110	70-130
Toluene-d8		104	70-130

PQL = Practical quantitation limit
ND = Not detected at or above the MDL
P = The RPD between two GC columns exceeds 40%
J = Estimated result < PQL and ≥ MDL
N - Recovery is out of criteria
+ - RPD is out of criteria

Where applicable, all soil sample analysis are reported on a dry weight basis unless flagged with a "W"

Note: Calculations are performed before rounding to avoid round-off errors in calculated results

Volatile Organic Compounds by GC/MS - LCS

Sample ID: LQ30000-002
Batch: 30000
Analytical Method: 8260B

Matrix: Aqueous
Prep Method: 5030B

Parameter	Spike Amount (ug/L)	Result (ug/L)	Q	Dil	% Rec	% Rec Limit	Analysis Date
Acetone	100	110		1	113	46-153	03/22/2010 2115
Benzene	50	50		1	100	70-130	03/22/2010 2115
Bromodichloromethane	50	53		1	106	70-130	03/22/2010 2115
Bromoform	50	50		1	101	70-130	03/22/2010 2115
Bromomethane (Methyl bromide)	50	58		1	116	60-140	03/22/2010 2115
2-Butanone (MEK)	100	91		1	91	60-140	03/22/2010 2115
Carbon disulfide	50	49		1	99	60-140	03/22/2010 2115
Carbon tetrachloride	50	54		1	108	70-130	03/22/2010 2115
Chlorobenzene	50	50		1	99	70-130	03/22/2010 2115
Chloroethane	50	55		1	111	42-163	03/22/2010 2115
Chloroform	50	50		1	100	70-130	03/22/2010 2115
Chloromethane (Methyl chloride)	50	44		1	88	20-158	03/22/2010 2115
Cyclohexane	50	48		1	96	70-130	03/22/2010 2115
1,2-Dibromo-3-chloropropane (DBCP)	50	50		1	101	70-130	03/22/2010 2115
Dibromochloromethane	50	57		1	114	70-130	03/22/2010 2115
1,2-Dibromoethane (EDB)	50	52		1	105	70-130	03/22/2010 2115
1,2-Dichlorobenzene	50	51		1	102	70-130	03/22/2010 2115
1,4-Dichlorobenzene	50	49		1	99	70-130	03/22/2010 2115
1,3-Dichlorobenzene	50	50		1	100	70-130	03/22/2010 2115
Dichlorodifluoromethane	50	50		1	100	60-140	03/22/2010 2115
1,1-Dichloroethane	50	48		1	97	70-130	03/22/2010 2115
1,2-Dichloroethane	50	50		1	99	70-130	03/22/2010 2115
1,1-Dichloroethene	50	51		1	102	70-130	03/22/2010 2115
trans-1,2-Dichloroethene	50	48		1	96	70-130	03/22/2010 2115
cis-1,2-Dichloroethene	50	49		1	99	70-130	03/22/2010 2115
1,2-Dichloropropane	50	46		1	93	70-130	03/22/2010 2115
trans-1,3-Dichloropropene	50	52		1	103	70-130	03/22/2010 2115
cis-1,3-Dichloropropene	50	51		1	102	70-130	03/22/2010 2115
Ethylbenzene	50	52		1	103	70-130	03/22/2010 2115
2-Hexanone	100	95		1	95	60-140	03/22/2010 2115
Isopropylbenzene	50	57		1	114	70-130	03/22/2010 2115
Methyl acetate	50	48		1	97	15-128	03/22/2010 2115
Methyl tertiary butyl ether (MTBE)	50	54		1	108	70-130	03/22/2010 2115
4-Methyl-2-pentanone	100	99		1	99	60-140	03/22/2010 2115
Methylcyclohexane	50	54		1	109	70-130	03/22/2010 2115
Methylene chloride	50	46		1	93	70-130	03/22/2010 2115
Styrene	50	52		1	105	70-130	03/22/2010 2115
1,1,2,2-Tetrachloroethane	50	48		1	95	70-130	03/22/2010 2115
Tetrachloroethene	50	54		1	109	70-130	03/22/2010 2115
Toluene	50	49		1	98	70-130	03/22/2010 2115
1,1,2-Trichloro-1,2,2-Trifluoroethane	50	52		1	104	70-130	03/22/2010 2115
1,2,4-Trichlorobenzene	50	57		1	114	70-130	03/22/2010 2115
1,1,1-Trichloroethane	50	54		1	108	70-130	03/22/2010 2115
1,1,2-Trichloroethane	50	47		1	95	70-130	03/22/2010 2115

PQL = Practical quantitation limit
ND = Not detected at or above the MDL
P = The RPD between two GC columns exceeds 40%
J = Estimated result < PQL and ≥ MDL
N - Recovery is out of criteria
+ - RPD is out of criteria

Where applicable, all soil sample analysis are reported on a dry weight basis unless flagged with a "W"

Note: Calculations are performed before rounding to avoid round-off errors in calculated results

Volatile Organic Compounds by GC/MS - LCS

Sample ID: LQ30000-002
Batch: 30000
Analytical Method: 8260B

Matrix: Aqueous
Prep Method: 5030B

Parameter	Spike Amount (ug/L)	Result (ug/L)	Q	Dil	% Rec	% Rec Limit	Analysis Date
Trichloroethene	50	52		1	104	70-130	03/22/2010 2115
Trichlorofluoromethane	50	60		1	121	60-140	03/22/2010 2115
Vinyl chloride	50	52		1	103	60-140	03/22/2010 2115
Xylenes (total)	100	110		1	108	70-130	03/22/2010 2115

Surrogate	Q	% Rec	Acceptance Limit
Bromofluorobenzene		99	70-130
1,2-Dichloroethane-d4		109	70-130
Toluene-d8		103	70-130

PQL = Practical quantitation limit
ND = Not detected at or above the MDL
P = The RPD between two GC columns exceeds 40%
J = Estimated result < PQL and ≥ MDL
N - Recovery is out of criteria
+ - RPD is out of criteria

Where applicable, all soil sample analysis are reported on a dry weight basis unless flagged with a "W"

Note: Calculations are performed before rounding to avoid round-off errors in calculated results

Volatile Organic Compounds by GC/MS - LCSD

Sample ID: LQ30000-003
Batch: 30000
Analytical Method: 8260B

Matrix: Aqueous
Prep Method: 5030B

Parameter	Spike Amount (ug/L)	Result (ug/L)	Q	Dil	% Rec	% RPD	% Rec Limit	% RPD Limit	Analysis Date
Acetone	100	97		1	97	16	46-153	20	03/22/2010 2137
Benzene	50	49		1	98	1.9	70-130	20	03/22/2010 2137
Bromodichloromethane	50	53		1	105	0.58	70-130	20	03/22/2010 2137
Bromoform	50	50		1	100	0.33	70-130	20	03/22/2010 2137
Bromomethane (Methyl bromide)	50	54		1	109	6.3	60-140	20	03/22/2010 2137
2-Butanone (MEK)	100	88		1	88	3.4	60-140	20	03/22/2010 2137
Carbon disulfide	50	46		1	93	6.7	60-140	20	03/22/2010 2137
Carbon tetrachloride	50	52		1	104	3.8	70-130	20	03/22/2010 2137
Chlorobenzene	50	50		1	101	1.7	70-130	20	03/22/2010 2137
Chloroethane	50	51		1	103	7.4	42-163	20	03/22/2010 2137
Chloroform	50	48		1	96	4.4	70-130	20	03/22/2010 2137
Chloromethane (Methyl chloride)	50	44		1	87	1.1	20-158	20	03/22/2010 2137
Cyclohexane	50	47		1	95	0.95	70-130	20	03/22/2010 2137
1,2-Dibromo-3-chloropropane (DBCP)	50	48		1	95	5.6	70-130	20	03/22/2010 2137
Dibromochloromethane	50	57		1	114	0.47	70-130	20	03/22/2010 2137
1,2-Dibromoethane (EDB)	50	53		1	106	1.9	70-130	20	03/22/2010 2137
1,2-Dichlorobenzene	50	50		1	100	2.0	70-130	20	03/22/2010 2137
1,4-Dichlorobenzene	50	51		1	101	2.4	70-130	20	03/22/2010 2137
1,3-Dichlorobenzene	50	51		1	102	1.6	70-130	20	03/22/2010 2137
Dichlorodifluoromethane	50	47		1	95	5.8	60-140	20	03/22/2010 2137
1,1-Dichloroethane	50	46		1	91	5.9	70-130	20	03/22/2010 2137
1,2-Dichloroethane	50	48		1	96	3.0	70-130	20	03/22/2010 2137
1,1-Dichloroethene	50	48		1	97	5.5	70-130	20	03/22/2010 2137
trans-1,2-Dichloroethene	50	45		1	91	5.6	70-130	20	03/22/2010 2137
cis-1,2-Dichloroethene	50	47		1	95	4.3	70-130	20	03/22/2010 2137
1,2-Dichloropropane	50	47		1	94	1.4	70-130	20	03/22/2010 2137
trans-1,3-Dichloropropene	50	53		1	107	3.3	70-130	20	03/22/2010 2137
cis-1,3-Dichloropropene	50	53		1	106	4.3	70-130	20	03/22/2010 2137
Ethylbenzene	50	52		1	105	1.5	70-130	20	03/22/2010 2137
2-Hexanone	100	100		1	100	5.4	60-140	20	03/22/2010 2137
Isopropylbenzene	50	56		1	113	1.5	70-130	20	03/22/2010 2137
Methyl acetate	50	45		1	90	7.0	15-128	20	03/22/2010 2137
Methyl tertiary butyl ether (MTBE)	50	50		1	100	8.2	70-130	20	03/22/2010 2137
4-Methyl-2-pentanone	100	98		1	98	0.95	60-140	20	03/22/2010 2137
Methylcyclohexane	50	54		1	108	1.3	70-130	20	03/22/2010 2137
Methylene chloride	50	43		1	87	6.4	70-130	20	03/22/2010 2137
Styrene	50	53		1	105	0.69	70-130	20	03/22/2010 2137
1,1,2,2-Tetrachloroethane	50	48		1	96	0.56	70-130	20	03/22/2010 2137
Tetrachloroethene	50	54		1	108	0.087	70-130	20	03/22/2010 2137
Toluene	50	51		1	102	4.5	70-130	20	03/22/2010 2137
1,1,2-Trichloro-1,2,2-Trifluoroethane	50	50		1	100	4.1	70-130	20	03/22/2010 2137
1,2,4-Trichlorobenzene	50	53		1	107	6.8	70-130	20	03/22/2010 2137
1,1,1-Trichloroethane	50	52		1	104	4.0	70-130	20	03/22/2010 2137
1,1,2-Trichloroethane	50	49		1	98	3.0	70-130	20	03/22/2010 2137

PQL = Practical quantitation limit
ND = Not detected at or above the MDL
P = The RPD between two GC columns exceeds 40%
J = Estimated result < PQL and ≥ MDL
N - Recovery is out of criteria
+ - RPD is out of criteria

Where applicable, all soil sample analysis are reported on a dry weight basis unless flagged with a "W"

Note: Calculations are performed before rounding to avoid round-off errors in calculated results

Volatile Organic Compounds by GC/MS - LCSD

Sample ID: LQ30000-003
Batch: 30000
Analytical Method: 8260B

Matrix: Aqueous
Prep Method: 5030B

Parameter	Spike Amount (ug/L)	Result (ug/L)	Q	Dil	% Rec	% RPD	% Rec Limit	% RPD Limit	Analysis Date
Trichloroethene	50	51		1	103	0.70	70-130	20	03/22/2010 2137
Trichlorofluoromethane	50	48	+	1	96	22	60-140	20	03/22/2010 2137
Vinyl chloride	50	49		1	98	5.5	60-140	20	03/22/2010 2137
Xylenes (total)	100	110		1	108	0.15	70-130	20	03/22/2010 2137

Surrogate	Q	% Rec	Acceptance Limit
Bromofluorobenzene		103	70-130
1,2-Dichloroethane-d4		104	70-130
Toluene-d8		105	70-130

PQL = Practical quantitation limit
ND = Not detected at or above the MDL
P = The RPD between two GC columns exceeds 40%
J = Estimated result < PQL and ≥ MDL
N - Recovery is out of criteria
+ - RPD is out of criteria

Where applicable, all soil sample analysis are reported on a dry weight basis unless flagged with a "W"

Note: Calculations are performed before rounding to avoid round-off errors in calculated results

Semivolatile Organic Compounds by GC/MS - MB

Sample ID: LQ29900-001
Batch: 29900
Analytical Method: 8270D

Matrix: Aqueous
Prep Method: 3520C
Prep Date: 03/22/2010 2035

Parameter	Result	Q	Dil	PQL	MDL	Units	Analysis Date
1,1'-Biphenyl	ND		1	1.0	0.20	ug/L	03/23/2010 1910
2,4,5-Trichlorophenol	ND		1	1.0	0.18	ug/L	03/23/2010 1910
2,4,6-Trichlorophenol	ND		1	1.0	0.22	ug/L	03/23/2010 1910
2,4-Dichlorophenol	ND		1	1.0	0.15	ug/L	03/23/2010 1910
2,4-Dimethylphenol	ND		1	1.0	0.31	ug/L	03/23/2010 1910
2,4-Dinitrophenol	ND		1	5.0	0.25	ug/L	03/23/2010 1910
2,4-Dinitrotoluene	ND		1	2.0	0.45	ug/L	03/23/2010 1910
2,6-Dinitrotoluene	ND		1	2.0	0.40	ug/L	03/23/2010 1910
2-Chloronaphthalene	ND		1	1.0	0.12	ug/L	03/23/2010 1910
2-Chlorophenol	ND		1	1.0	0.13	ug/L	03/23/2010 1910
2-Methylnaphthalene	ND		1	1.0	0.080	ug/L	03/23/2010 1910
2-Methylphenol	ND		1	1.0	0.17	ug/L	03/23/2010 1910
2-Nitroaniline	ND		1	2.0	0.55	ug/L	03/23/2010 1910
2-Nitrophenol	ND		1	2.0	0.27	ug/L	03/23/2010 1910
3 & 4-Methylphenol	ND		1	2.0	0.57	ug/L	03/23/2010 1910
3,3'-Dichlorobenzidine	ND		1	5.0	0.81	ug/L	03/23/2010 1910
3-Nitroaniline	ND		1	2.0	0.77	ug/L	03/23/2010 1910
4,6-Dinitro-2-methylphenol	ND		1	5.0	1.5	ug/L	03/23/2010 1910
4-Bromophenyl phenyl ether	ND		1	1.0	0.12	ug/L	03/23/2010 1910
4-Chloro-3-methyl phenol	ND		1	1.0	0.22	ug/L	03/23/2010 1910
4-Chloroaniline	ND		1	1.0	0.13	ug/L	03/23/2010 1910
4-Chlorophenyl phenyl ether	ND		1	1.0	0.11	ug/L	03/23/2010 1910
4-Nitroaniline	ND		1	2.0	0.39	ug/L	03/23/2010 1910
4-Nitrophenol	ND		1	5.0	0.64	ug/L	03/23/2010 1910
Acenaphthene	ND		1	1.0	0.090	ug/L	03/23/2010 1910
Acenaphthylene	ND		1	1.0	0.16	ug/L	03/23/2010 1910
Acetophenone	ND		1	1.0	0.32	ug/L	03/23/2010 1910
Anthracene	ND		1	1.0	0.13	ug/L	03/23/2010 1910
Atrazine	ND		1	1.0	0.20	ug/L	03/23/2010 1910
Benzaldehyde	ND		1	5.0	1.0	ug/L	03/23/2010 1910
Benzo(a)anthracene	ND		1	1.0	0.15	ug/L	03/23/2010 1910
Benzo(a)pyrene	ND		1	1.0	0.16	ug/L	03/23/2010 1910
Benzo(b)fluoranthene	ND		1	1.0	0.20	ug/L	03/23/2010 1910
Benzo(g,h,i)perylene	ND		1	1.0	0.23	ug/L	03/23/2010 1910
Benzo(k)fluoranthene	ND		1	1.0	0.12	ug/L	03/23/2010 1910
bis(2-Chloroethoxy)methane	ND		1	1.0	0.13	ug/L	03/23/2010 1910
bis(2-Chloroethyl)ether	ND		1	1.0	0.13	ug/L	03/23/2010 1910
bis(2-Chloroisopropyl)ether	ND		1	1.0	0.080	ug/L	03/23/2010 1910
bis(2-Ethylhexyl)phthalate	ND		1	5.0	1.7	ug/L	03/23/2010 1910
Butyl benzyl phthalate	ND		1	5.0	1.7	ug/L	03/23/2010 1910
Caprolactam	ND		1	5.0	1.2	ug/L	03/23/2010 1910
Carbazole	ND		1	1.0	0.25	ug/L	03/23/2010 1910
Chrysene	ND		1	1.0	0.12	ug/L	03/23/2010 1910
Di-n-butyl phthalate	ND		1	5.0	1.7	ug/L	03/23/2010 1910

PQL = Practical quantitation limit
ND = Not detected at or above the MDL
P = The RPD between two GC columns exceeds 40%
J = Estimated result < PQL and ≥ MDL
N - Recovery is out of criteria
+ - RPD is out of criteria

Where applicable, all soil sample analysis are reported on a dry weight basis unless flagged with a "W"

Note: Calculations are performed before rounding to avoid round-off errors in calculated results

Semivolatile Organic Compounds by GC/MS - MB

Sample ID: LQ29900-001
Batch: 29900
Analytical Method: 8270D

Matrix: Aqueous
Prep Method: 3520C
Prep Date: 03/22/2010 2035

Parameter	Result	Q	Dil	PQL	MDL	Units	Analysis Date
Di-n-octylphthalate	ND		1	5.0	1.7	ug/L	03/23/2010 1910
Dibenzo(a,h)anthracene	ND		1	1.0	0.13	ug/L	03/23/2010 1910
Dibenzofuran	ND		1	1.0	0.16	ug/L	03/23/2010 1910
Diethylphthalate	ND		1	5.0	1.7	ug/L	03/23/2010 1910
Dimethyl phthalate	ND		1	5.0	1.7	ug/L	03/23/2010 1910
Fluoranthene	ND		1	1.0	0.21	ug/L	03/23/2010 1910
Fluorene	ND		1	1.0	0.10	ug/L	03/23/2010 1910
Hexachlorobenzene	ND		1	1.0	0.21	ug/L	03/23/2010 1910
Hexachlorobutadiene	ND		1	1.0	0.090	ug/L	03/23/2010 1910
Hexachlorocyclopentadiene	ND		1	5.0	0.23	ug/L	03/23/2010 1910
Hexachloroethane	ND		1	1.0	0.11	ug/L	03/23/2010 1910
Indeno(1,2,3-c,d)pyrene	ND		1	1.0	0.23	ug/L	03/23/2010 1910
Isophorone	ND		1	1.0	0.080	ug/L	03/23/2010 1910
N-Nitrosodi-n-propylamine	ND		1	1.0	0.080	ug/L	03/23/2010 1910
N-Nitrosodiphenylamine (Diphenylamine)	ND		1	1.0	0.38	ug/L	03/23/2010 1910
Naphthalene	ND		1	1.0	0.070	ug/L	03/23/2010 1910
Nitrobenzene	ND		1	1.0	0.10	ug/L	03/23/2010 1910
Pentachlorophenol	ND		1	5.0	0.54	ug/L	03/23/2010 1910
Phenanthrene	ND		1	1.0	0.18	ug/L	03/23/2010 1910
Phenol	ND		1	1.0	0.11	ug/L	03/23/2010 1910
Pyrene	ND		1	1.0	0.16	ug/L	03/23/2010 1910

Surrogate	Q	% Rec	Acceptance Limit
2,4,6-Tribromophenol		43	41-144
2-Fluorobiphenyl		55	37-129
2-Fluorophenol		75	24-127
Nitrobenzene-d5		77	38-127
Phenol-d5		61	28-128
Terphenyl-d14		55	10-148

PQL = Practical quantitation limit
ND = Not detected at or above the MDL
P = The RPD between two GC columns exceeds 40%
J = Estimated result < PQL and ≥ MDL
N - Recovery is out of criteria
+ - RPD is out of criteria

Where applicable, all soil sample analysis are reported on a dry weight basis unless flagged with a "W"

Note: Calculations are performed before rounding to avoid round-off errors in calculated results

Semivolatile Organic Compounds by GC/MS - LCS

Sample ID: LQ29900-002
Batch: 29900
Analytical Method: 8270D

Matrix: Aqueous
Prep Method: 3520C
Prep Date: 03/22/2010 2035

Parameter	Spike Amount (ug/L)	Result (ug/L)	Q	Dil	% Rec	% Rec Limit	Analysis Date
2,4,5-Trichlorophenol	20	14		1	71	46-125	03/25/2010 1441
2,4,6-Trichlorophenol	20	14		1	72	36-123	03/25/2010 1441
2,4-Dichlorophenol	20	14		1	71	38-127	03/25/2010 1441
2,4-Dimethylphenol	20	12		1	58	36-110	03/25/2010 1441
2,4-Dinitrophenol	100	66		1	66	33-143	03/25/2010 1441
2,4-Dinitrotoluene	40	27		1	68	55-137	03/25/2010 1441
2,6-Dinitrotoluene	40	27		1	68	53-128	03/25/2010 1441
2-Chloronaphthalene	20	14		1	71	42-132	03/25/2010 1441
2-Chlorophenol	20	13		1	64	40-128	03/25/2010 1441
2-Methylnaphthalene	20	13		1	63	49-122	03/25/2010 1441
2-Methylphenol	20	11		1	54	33-122	03/25/2010 1441
2-Nitroaniline	40	28		1	70	48-126	03/25/2010 1441
2-Nitrophenol	40	28		1	70	44-131	03/25/2010 1441
3 & 4-Methylphenol	40	25		1	63	48-112	03/25/2010 1441
3-Nitroaniline	40	21		1	53	29-109	03/25/2010 1441
4,6-Dinitro-2-methylphenol	100	69		1	69	46-151	03/25/2010 1441
4-Bromophenyl phenyl ether	20	14		1	69	49-123	03/25/2010 1441
4-Chloro-3-methyl phenol	20	14		1	68	48-136	03/25/2010 1441
4-Chloroaniline	20	2.2	N	1	11	18-73	03/25/2010 1441
4-Chlorophenyl phenyl ether	20	14		1	68	34-124	03/25/2010 1441
4-Nitroaniline	40	25		1	63	42-154	03/25/2010 1441
4-Nitrophenol	100	77		1	77	43-145	03/25/2010 1441
Acenaphthene	20	14		1	68	51-130	03/25/2010 1441
Acenaphthylene	20	14		1	70	46-131	03/25/2010 1441
Anthracene	20	13		1	66	48-122	03/25/2010 1441
Benzo(a)anthracene	20	14		1	68	50-143	03/25/2010 1441
Benzo(a)pyrene	20	15		1	75	55-141	03/25/2010 1441
Benzo(b)fluoranthene	20	14		1	69	48-147	03/25/2010 1441
Benzo(g,h,i)perylene	20	15		1	73	48-139	03/25/2010 1441
Benzo(k)fluoranthene	20	14		1	70	48-148	03/25/2010 1441
bis(2-Chloroethoxy)methane	20	13		1	67	46-130	03/25/2010 1441
bis(2-Chloroethyl)ether	20	13		1	66	42-127	03/25/2010 1441
bis(2-Chloroisopropyl)ether	20	13		1	65	36-133	03/25/2010 1441
bis(2-Ethylhexyl)phthalate	20	14		1	70	40-141	03/25/2010 1441
Butyl benzyl phthalate	20	15		1	73	52-142	03/25/2010 1441
Carbazole	20	14		1	68	45-101	03/25/2010 1441
Chrysene	20	14		1	71	51-137	03/25/2010 1441
Di-n-butyl phthalate	20	14		1	71	50-134	03/25/2010 1441
Di-n-octylphthalate	20	14		1	72	50-136	03/25/2010 1441
Dibenzo(a,h)anthracene	20	14		1	70	48-139	03/25/2010 1441
Dibenzofuran	20	13		1	67	45-142	03/25/2010 1441
Diethylphthalate	20	14		1	69	48-124	03/25/2010 1441
Dimethyl phthalate	20	14		1	69	43-122	03/25/2010 1441
Fluoranthene	20	13		1	66	50-124	03/25/2010 1441

PQL = Practical quantitation limit
ND = Not detected at or above the MDL
P = The RPD between two GC columns exceeds 40%
J = Estimated result < PQL and ≥ MDL
N - Recovery is out of criteria
+ - RPD is out of criteria

Where applicable, all soil sample analysis are reported on a dry weight basis unless flagged with a "W"

Note: Calculations are performed before rounding to avoid round-off errors in calculated results

Semivolatile Organic Compounds by GC/MS - LCS

Sample ID: LQ29900-002
Batch: 29900
Analytical Method: 8270D

Matrix: Aqueous
Prep Method: 3520C
Prep Date: 03/22/2010 2035

Parameter	Spike Amount (ug/L)	Result (ug/L)	Q	Dil	% Rec	% Rec Limit	Analysis Date
Fluorene	20	13		1	67	39-122	03/25/2010 1441
Hexachlorobenzene	20	13		1	67	46-125	03/25/2010 1441
Hexachlorobutadiene	20	13		1	63	38-121	03/25/2010 1441
Hexachlorocyclopentadiene	100	39		1	39	24-110	03/25/2010 1441
Hexachloroethane	20	13		1	64	32-109	03/25/2010 1441
Indeno(1,2,3-c,d)pyrene	20	14		1	69	49-146	03/25/2010 1441
Isophorone	20	14		1	70	43-118	03/25/2010 1441
N-Nitrosodi-n-propylamine	20	13		1	66	46-135	03/25/2010 1441
N-Nitrosodiphenylamine (Diphenylamine)	20	13		1	66	44-124	03/25/2010 1441
Naphthalene	20	13		1	64	45-118	03/25/2010 1441
Nitrobenzene	20	13		1	66	46-131	03/25/2010 1441
Pentachlorophenol	100	62		1	62	30-137	03/25/2010 1441
Phenanthrene	20	14		1	68	49-122	03/25/2010 1441
Phenol	20	13		1	63	35-118	03/25/2010 1441
Pyrene	20	14		1	71	50-130	03/25/2010 1441

Surrogate	Q	% Rec	Acceptance Limit
2,4,6-Tribromophenol		64	41-144
2-Fluorobiphenyl		63	37-129
2-Fluorophenol		58	24-127
Nitrobenzene-d5		63	38-127
Phenol-d5		62	28-128
Terphenyl-d14		57	10-148

PQL = Practical quantitation limit
ND = Not detected at or above the MDL
P = The RPD between two GC columns exceeds 40%
J = Estimated result < PQL and ≥ MDL
N - Recovery is out of criteria
+ - RPD is out of criteria

Where applicable, all soil sample analysis are reported on a dry weight basis unless flagged with a "W"

Note: Calculations are performed before rounding to avoid round-off errors in calculated results

Semivolatile Organic Compounds by GC/MS - LCSD

Sample ID: LQ29900-003
Batch: 29900
Analytical Method: 8270D

Matrix: Aqueous
Prep Method: 3520C
Prep Date: 03/22/2010 2035

Parameter	Spike Amount (ug/L)	Result (ug/L)	Q	Dil	% Rec	% RPD	% Rec Limit	% RPD Limit	Analysis Date
2,4,5-Trichlorophenol	20	13		1	65	9.5	46-125	40	03/23/2010 1950
2,4,6-Trichlorophenol	20	11		1	54	28	36-123	40	03/23/2010 1950
2,4-Dichlorophenol	20	11		1	56	23	38-127	40	03/23/2010 1950
2,4-Dimethylphenol	20	11		1	53	9.0	36-110	40	03/23/2010 1950
2,4-Dinitrophenol	100	62		1	62	5.9	33-143	40	03/23/2010 1950
2,4-Dinitrotoluene	40	32		1	81	17	55-137	40	03/23/2010 1950
2,6-Dinitrotoluene	40	28		1	69	0.87	53-128	40	03/23/2010 1950
2-Chloronaphthalene	20	12		1	59	17	42-132	40	03/23/2010 1950
2-Chlorophenol	20	13		1	63	2.0	40-128	40	03/23/2010 1950
2-Methylnaphthalene	20	12		1	60	4.8	49-122	40	03/23/2010 1950
2-Methylphenol	20	12		1	60	11	33-122	40	03/23/2010 1950
2-Nitroaniline	40	23		1	58	18	48-126	40	03/23/2010 1950
2-Nitrophenol	40	25		1	63	10	44-131	40	03/23/2010 1950
3 & 4-Methylphenol	40	23		1	57	9.8	48-112	40	03/23/2010 1950
3-Nitroaniline	40	23		1	56	5.6	29-109	40	03/23/2010 1950
4,6-Dinitro-2-methylphenol	100	66		1	66	3.1	46-151	40	03/23/2010 1950
4-Bromophenyl phenyl ether	20	13		1	65	7.0	49-123	40	03/23/2010 1950
4-Chloro-3-methyl phenol	20	13		1	63	6.9	48-136	40	03/23/2010 1950
4-Chloroaniline	20	4.2	+	1	21	63	18-73	40	03/23/2010 1950
4-Chlorophenyl phenyl ether	20	13		1	64	6.0	34-124	40	03/23/2010 1950
4-Nitroaniline	40	30		1	74	17	42-154	40	03/23/2010 1950
4-Nitrophenol	100	89		1	89	15	43-145	40	03/23/2010 1950
Acenaphthene	20	13		1	63	7.9	51-130	40	03/23/2010 1950
Acenaphthylene	20	13		1	65	8.3	46-131	40	03/23/2010 1950
Anthracene	20	13		1	63	4.9	48-122	40	03/23/2010 1950
Benzo(a)anthracene	20	12		1	62	10	50-143	40	03/23/2010 1950
Benzo(a)pyrene	20	14		1	69	8.7	55-141	40	03/23/2010 1950
Benzo(b)fluoranthene	20	12		1	60	14	48-147	40	03/23/2010 1950
Benzo(g,h,i)perylene	20	11		1	55	28	48-139	40	03/23/2010 1950
Benzo(k)fluoranthene	20	14		1	69	0.65	48-148	40	03/23/2010 1950
bis(2-Chloroethoxy)methane	20	13		1	67	0.14	46-130	40	03/23/2010 1950
bis(2-Chloroethyl)ether	20	14		1	71	6.6	42-127	40	03/23/2010 1950
bis(2-Chloroisopropyl)ether	20	13		1	66	1.4	36-133	40	03/23/2010 1950
bis(2-Ethylhexyl)phthalate	20	11		1	53	28	40-141	40	03/23/2010 1950
Butyl benzyl phthalate	20	11		1	55	29	52-142	40	03/23/2010 1950
Carbazole	20	15		1	75	9.0	45-101	40	03/23/2010 1950
Chrysene	20	13		1	63	13	51-137	40	03/23/2010 1950
Di-n-butyl phthalate	20	14		1	70	1.5	50-134	40	03/23/2010 1950
Di-n-octylphthalate	20	12		1	60	17	50-136	40	03/23/2010 1950
Dibenzo(a,h)anthracene	20	12		1	60	15	48-139	40	03/23/2010 1950
Dibenzofuran	20	15		1	75	12	45-142	40	03/23/2010 1950
Diethylphthalate	20	15		1	73	5.4	48-124	40	03/23/2010 1950
Dimethyl phthalate	20	13		1	65	6.3	43-122	40	03/23/2010 1950
Fluoranthene	20	12		1	59	11	50-124	40	03/23/2010 1950

PQL = Practical quantitation limit
ND = Not detected at or above the MDL
P = The RPD between two GC columns exceeds 40%
J = Estimated result < PQL and ≥ MDL
N - Recovery is out of criteria
+ - RPD is out of criteria

Where applicable, all soil sample analysis are reported on a dry weight basis unless flagged with a "W"

Note: Calculations are performed before rounding to avoid round-off errors in calculated results

Semivolatile Organic Compounds by GC/MS - LCSD

Sample ID: LQ29900-003
Batch: 29900
Analytical Method: 8270D

Matrix: Aqueous
Prep Method: 3520C
Prep Date: 03/22/2010 2035

Parameter	Spike Amount (ug/L)	Result (ug/L)	Q	Dil	% Rec	% RPD	% Rec Limit	% RPD Limit	Analysis Date
Fluorene	20	13		1	64	4.6	39-122	40	03/23/2010 1950
Hexachlorobenzene	20	13		1	63	6.7	46-125	40	03/23/2010 1950
Hexachlorobutadiene	20	14		1	71	11	38-121	40	03/23/2010 1950
Hexachlorocyclopentadiene	100	54		1	54	31	24-110	40	03/23/2010 1950
Hexachloroethane	20	14		1	72	12	32-109	40	03/23/2010 1950
Indeno(1,2,3-c,d)pyrene	20	12		1	58	18	49-146	40	03/23/2010 1950
Isophorone	20	16		1	80	13	43-118	40	03/23/2010 1950
N-Nitrosodi-n-propylamine	20	15		1	74	12	46-135	40	03/23/2010 1950
N-Nitrosodiphenylamine (Diphenylamine)	20	13		1	64	4.1	44-124	40	03/23/2010 1950
Naphthalene	20	13		1	64	0.85	45-118	40	03/23/2010 1950
Nitrobenzene	20	16		1	78	16	46-131	40	03/23/2010 1950
Pentachlorophenol	100	64		1	64	2.7	30-137	40	03/23/2010 1950
Phenanthrene	20	13		1	64	6.4	49-122	40	03/23/2010 1950
Phenol	20	13		1	65	3.4	35-118	40	03/23/2010 1950
Pyrene	20	11		1	55	25	50-130	40	03/23/2010 1950

Surrogate	Q	% Rec	Acceptance Limit
2,4,6-Tribromophenol		51	41-144
2-Fluorobiphenyl		59	37-129
2-Fluorophenol		73	24-127
Nitrobenzene-d5		74	38-127
Phenol-d5		65	28-128
Terphenyl-d14		45	10-148

PQL = Practical quantitation limit
ND = Not detected at or above the MDL
P = The RPD between two GC columns exceeds 40%
J = Estimated result < PQL and ≥ MDL
N - Recovery is out of criteria
+ - RPD is out of criteria

Where applicable, all soil sample analysis are reported on a dry weight basis unless flagged with a "W"

Note: Calculations are performed before rounding to avoid round-off errors in calculated results

SHEALY ENVIRONMENTAL SERVICES, INC.

SHEALY Chain of Custody Record

SHEALY ENVIRONMENTAL SERVICES, INC.
106 Vantage Point Drive
West Columbia, South Carolina 29172
Telephone No. (803) 791-9700 Fax No. (803) 791-9111

Number 104873

Client: ARCADIS	Report to Contact: Shelley Gibbons	Telephone No. / Fax No. / E-mail: (919) 854-1282 / (919) 854-5448	Quote No.: 11954
Address: 801 Corporate Center Dr Suite 300	Sampler's Signature: X	Waybill No.	Page 1 of 1
City: Raleigh; State: NC; Zip Code: 27607	Printed Name: Robert B. Sheaty	Analysis (Attach list if more space is needed.)	
Project Name: SWMU39 Hunter Stewart			
Project No.: G709HAFS.F39A.DG0FI	P.O. No.		Lot No.: LC20005

Sample ID / Description (Containers for each sample may be combined on one line.)	Date	Time	G=Grab C=Composite	Matrix: Aqueous	Solid	Non-Aqueous	No. of Containers by Preservative Type: Unpres.	H2SO4	HNO3	HCl	NaOH	NaS2O3		VOC 8260B	SVOC 8270								Remarks / Cooler I.D.
F39TW01 (40-45)	3/18/10	1040	G	x			2			3				x	x								
Trip Blank (031810)	lab	lab		x						2				x									

Possible Hazard Identification: ☐ Non-Hazard ☐ Flammable ☐ Skin Irritant ☐ Poison ☒ Unknown

Sample Disposal: ☐ Return to Client ☒ Disposal by Lab

Note: All samples are retained for six weeks from receipt unless other arrangements are made.

Turn Around Time Required (Prior lab approval required for expedited TAT.): ☒ Standard ☐ Rush (Specify)

QC Requirements (Specify):

	Date	Time		Date	Time
1. Relinquished by: Robert B. Sheaty	3/19/10	1600	1. Received by:		
2. Relinquished by:			2. Received by:		
3. Relinquished by: Fed Ex	3/20/10	850	3. Laboratory received by:	3/20/10	0850

Comments:

LAB USE ONLY
Received on Ice (Circle) Yes No Ice Pack
Receipt Temp. 2.2 °C

DISTRIBUTION: WHITE & YELLOW-Return to laboratory with Sample(s); PINK-Field/Client Copy

Document Number: F-AD-012 Effective Date: 08-04-02

SHEALY ENVIRONMENTAL SERVICES, INC.

Shealy Environmental Services, Inc.
Document Number: F-AD-016
Revision Number: 6

Page 1 of 1
Replaces Date: 09/22/06
Effective Date: 05/29/07

Sample Receipt Checklist (SRC)

Client: Arcadis Cooler Inspected by/date: [illegible] 3/19/10 Lot #: LC20005

Means of receipt: ☐ SESI ☐ Client ☐ UPS ☑ FedEx ☐ Airborne Exp ☐ Other

Yes ☑	No ☐	NA ☐	1. Were custody seals present on the cooler?
Yes ☑	No ☐	NA ☐	2. If custody seals were present, were they intact and unbroken?

Cooler ID/temperature upon receipt 2 / 2 °C ___ / ___ °C ___ / ___ °C ___ / ___ °C
___ / ___ °C ___ / ___ °C ___ / ___ °C ___ / ___ °C

Method: ☐ Temperature Blank ☑ Against Bottles
Method of coolant: ☑ Wet Ice ☐ Blue Ice ☐ Dry Ice ☐ None

If response is No (or Yes for 14, 15, 16), an explanation/resolution must be provided.

Yes ☐	No ☐	NA ☑	3. If temperature of any cooler exceeded 6.0°C, was Project Manager notified? PM notified by SRC, phone, note (circle one), other: ___ (For coolers received via commercial courier, PMs are to be notified immediately.
MM 3/24/10 Yes ☑	No ☐	NA ☑	4. Is the commercial courier's packing slip attached to this form?
Yes ☐	No ☑	NA ☐	5. Were proper custody procedures (relinquished/received) followed?
Yes ☑	No ☐	NA ☐	6. Were sample IDs listed?
Yes ☑	No ☐	NA ☐	7. Was collection date & time listed?
Yes ☑	No ☐	NA ☐	8. Were tests to be performed listed on the COC or was quote # provided?
Yes ☑	No ☐	NA ☐	9. Did all samples arrive in the proper containers for each test?
Yes ☑	No ☐	NA ☐	10. Did all container label information (ID, date, time) agree with COC?
Yes ☑	No ☐	NA ☐	11. Did all containers arrive in good condition (unbroken, lids on, etc.)?
Yes ☑	No ☐	NA ☐	12. Was adequate sample volume available?
Yes ☑	No ☐	NA ☐	13. Were all samples received within ½ the holding time or 48 hours, whichever comes first?
Yes ☐	No ☑	NA ☐	14. Were any samples containers missing?
Yes ☐	No ☑	NA ☐	15. Were there any excess samples not listed on COC?
Yes ☑	No ☐	NA ☐	16. Were bubbles present >"pea-size" (¼" or 6mm in diameter) in any VOA vials?
Yes ☐	No ☐	NA ☑	17. Were all metals/O&G/HEM/nutrient samples received at a pH of <2?
Yes ☐	No ☐	NA ☑	18. Were all cyanide and/or sulfide samples received at a pH >12?
Yes ☐	No ☐	NA ☑	19. Were all applicable NH3/TKN/cyanide/phenol/BNA/pest/PCB/herb (<0.2mg/L) and toxicity (<0.1mg/L) samples free of residual chlorine?
Yes ☑	No ☐	NA ☐	20. Were collection temperatures documented on the COC for NC samples?

Sample Preservation (Must be completed for any sample(s) incorrectly preserved or with headspace.)

Sample(s) -002 (1) were received incorrectly preserved and were adjusted accordingly in sample receiving with ___ (H_2SO_4,HNO_3,HCl,NaOH) with the SR # (number)

Sample(s) ___ were received with bubbles >6 mm in diameter.

Sample(s) ___ were received with TRC >0.2 mg/L for NH3/TKN/cyanide/BNA/pest/PCB/herb.

Toxicity sample(s) ___ were received with TRC >0.1 mg/L and were analyzed by method 330.5.

Date 3/19/10 FedEx Tracking Number 871525021905

Corrective Action taken, if necessary:
Was client notified: Yes ☐ No ☐
SESI-employee: ___
Comments: ___

Sender's Name ROBBY SHEALY Phone 864-216-5450
Company ARCADIS
Address 30 PATEWOOD DR STE 155
City GREENVILLE State SC ZIP 29615-6809

Report of Analysis

ARCADIS U.S., Inc.
30 Patewood Drive
Suite 155
Greenville, SC 29615
Attention: Chase Forman

Project Name: FTS-39 Hunter Stewart

Project Number: GP08HAFS.F39A.DG0FI

Lot Number: LC13017

Date Completed: 03/18/2010

Nisreen Saikaly
Project Manager

This report shall not be reproduced, except in its entirety, without the written approval of Shealy Environmental Services, Inc.

The following non-paginated documents are considered part of this report: Chain of Custody Record and Sample Receipt Checklist.

* L C 1 3 0 1 7 *

Case Narrative
ARCADIS U.S., Inc.
Lot Number: LC13017

This Report of Analysis contains the analytical result(s) for the sample(s) listed on the Sample Summary following this Case Narrative. The sample receiving date is documented in the header information associated with each sample.

Sample receipt, sample analysis, and data review have been performed in accordance with the most current approved NELAC standards, the Shealy Environmental Services, Inc. ("Shealy") Quality Assurance Management Plan (QAMP), standard operating procedures (SOPs), and Shealy policies. Any exceptions to the NELAC standards, the QAMP, SOPs or policies are qualified on the results page or discussed below.

If you have any questions regarding this report please contact the Shealy Project Manager listed on the cover page.

Sample Summary
ARCADIS U.S., Inc.
Lot Number: LC13017

Sample Number	Sample ID	Matrix	Date Sampled	Date Received
001	G4MW019 (031010)	Aqueous	03/10/2010 0853	03/13/2010
002	G4MW020 (031010)	Aqueous	03/10/2010 0950	03/13/2010
003	G4MW023 (031010)	Aqueous	03/10/2010 1105	03/13/2010
004	G4MW016 (031010)	Aqueous	03/10/2010 1222	03/13/2010
005	G4MW017 (031010)	Aqueous	03/10/2010 1250	03/13/2010
006	G4MW025 (031010)	Aqueous	03/10/2010 1351	03/13/2010
007	G4MW024 (031010)	Aqueous	03/10/2010 1440	03/13/2010
008	G4MW031 (031010)	Aqueous	03/10/2010 1625	03/13/2010
009	DUP-5 (031110)	Aqueous	03/11/2010 0700	03/13/2010
010	G4MW027 (031110)	Aqueous	03/11/2010 0859	03/13/2010
011	G4MW028 (031110)	Aqueous	03/11/2010 1033	03/13/2010
012	G4MW029 (031110)	Aqueous	03/11/2010 1124	03/13/2010
013	G4MW011 (031110)	Aqueous	03/11/2010 1515	03/13/2010
014	G4MW006 (031210)	Aqueous	03/12/2010 0815	03/13/2010
015	G4MW018 (031210)	Aqueous	03/12/2010 0842	03/13/2010
016	G4MW010 (031210)	Aqueous	03/12/2010 0947	03/13/2010
017	TRIP BLANK (031010)	Aqueous	03/12/2010 0839	03/13/2010

(17 samples)

Executive Summary
ARCADIS U.S., Inc.
Lot Number: LC13017

Sample	Sample ID	Matrix	Parameter	Method	Result	Q	Units	Page
001	G4MW019 (031010)	Aqueous	Acetone	8260B	1.8	J	ug/L	6
001	G4MW019 (031010)	Aqueous	Carbon disulfide	8260B	0.11	J	ug/L	6
001	G4MW019 (031010)	Aqueous	1,1-Dichloroethane	8260B	0.16	J	ug/L	6
001	G4MW019 (031010)	Aqueous	trans-1,2-Dichloroethene	8260B	4.2		ug/L	6
001	G4MW019 (031010)	Aqueous	1,1-Dichloroethene	8260B	0.43	J	ug/L	6
001	G4MW019 (031010)	Aqueous	cis-1,2-Dichloroethene	8260B	14		ug/L	6
001	G4MW019 (031010)	Aqueous	Trichloroethene	8260B	6.5		ug/L	7
002	G4MW020 (031010)	Aqueous	Acetone	8260B	1.2	J	ug/L	8
002	G4MW020 (031010)	Aqueous	Benzene	8260B	0.13	J	ug/L	8
002	G4MW020 (031010)	Aqueous	trans-1,2-Dichloroethene	8260B	0.59		ug/L	8
002	G4MW020 (031010)	Aqueous	1,1-Dichloroethene	8260B	0.13	J	ug/L	8
002	G4MW020 (031010)	Aqueous	cis-1,2-Dichloroethene	8260B	8.4		ug/L	8
002	G4MW020 (031010)	Aqueous	Trichloroethene	8260B	0.28	J	ug/L	9
002	G4MW020 (031010)	Aqueous	Vinyl chloride	8260B	0.23	J	ug/L	9
003	G4MW023 (031010)	Aqueous	Acetone	8260B	1.5	J	ug/L	10
004	G4MW016 (031010)	Aqueous	Acetone	8260B	1.3	J	ug/L	12
004	G4MW016 (031010)	Aqueous	Benzene	8260B	0.23	J	ug/L	12
004	G4MW016 (031010)	Aqueous	trans-1,2-Dichloroethene	8260B	1.1		ug/L	12
004	G4MW016 (031010)	Aqueous	1,1-Dichloroethene	8260B	0.13	J	ug/L	12
004	G4MW016 (031010)	Aqueous	cis-1,2-Dichloroethene	8260B	4.1		ug/L	12
004	G4MW016 (031010)	Aqueous	Tetrachloroethene	8260B	2.6		ug/L	12
004	G4MW016 (031010)	Aqueous	Trichloroethene	8260B	23		ug/L	13
005	G4MW017 (031010)	Aqueous	Acetone	8260B	1.9	J	ug/L	14
005	G4MW017 (031010)	Aqueous	trans-1,2-Dichloroethene	8260B	0.65		ug/L	14
005	G4MW017 (031010)	Aqueous	cis-1,2-Dichloroethene	8260B	2.2		ug/L	14
005	G4MW017 (031010)	Aqueous	Trichloroethene	8260B	6.8		ug/L	15
006	G4MW025 (031010)	Aqueous	Acetone	8260B	1.8	J	ug/L	16
006	G4MW025 (031010)	Aqueous	1,1-Dichloroethane	8260B	0.23	J	ug/L	16
006	G4MW025 (031010)	Aqueous	trans-1,2-Dichloroethene	8260B	2.3		ug/L	16
006	G4MW025 (031010)	Aqueous	1,1-Dichloroethene	8260B	0.38	J	ug/L	16
006	G4MW025 (031010)	Aqueous	cis-1,2-Dichloroethene	8260B	8.3		ug/L	16
006	G4MW025 (031010)	Aqueous	Trichloroethene	8260B	5.6		ug/L	17
007	G4MW024 (031010)	Aqueous	Acetone	8260B	3.0	J	ug/L	18
007	G4MW024 (031010)	Aqueous	Benzene	8260B	0.10	J	ug/L	18
007	G4MW024 (031010)	Aqueous	1,1-Dichloroethane	8260B	0.11	J	ug/L	18
007	G4MW024 (031010)	Aqueous	trans-1,2-Dichloroethene	8260B	1.7		ug/L	18
007	G4MW024 (031010)	Aqueous	1,1-Dichloroethene	8260B	0.28	J	ug/L	18
007	G4MW024 (031010)	Aqueous	cis-1,2-Dichloroethene	8260B	6.1		ug/L	18
007	G4MW024 (031010)	Aqueous	Trichloroethene	8260B	1.5		ug/L	19
008	G4MW031 (031010)	Aqueous	Acetone	8260B	1.3	J	ug/L	20
009	DUP-5 (031110)	Aqueous	Acetone	8260B	1.5	J	ug/L	22
009	DUP-5 (031110)	Aqueous	cis-1,2-Dichloroethene	8260B	0.18	J	ug/L	22
009	DUP-5 (031110)	Aqueous	Tetrachloroethene	8260B	0.40	J	ug/L	22
009	DUP-5 (031110)	Aqueous	Trichloroethene	8260B	2.0		ug/L	23
010	G4MW027 (031110)	Aqueous	Acetone	8260B	1.8	J	ug/L	24

Executive Summary (Continued)

Lot Number: LC13017

Sample	Sample ID	Matrix	Parameter	Method	Result	Q	Units	Page
010	G4MW027 (031110)	Aqueous	cis-1,2-Dichloroethene	8260B	0.16	J	ug/L	24
010	G4MW027 (031110)	Aqueous	Tetrachloroethene	8260B	0.38	J	ug/L	24
010	G4MW027 (031110)	Aqueous	Trichloroethene	8260B	1.9		ug/L	25
011	G4MW028 (031110)	Aqueous	Acetone	8260B	1.8	J	ug/L	26
012	G4MW029 (031110)	Aqueous	Acetone	8260B	1.1	J	ug/L	28
013	G4MW011 (031110)	Aqueous	Acetone	8260B	1.3	J	ug/L	30
013	G4MW011 (031110)	Aqueous	1,1-Dichloroethane	8260B	0.17	J	ug/L	30
013	G4MW011 (031110)	Aqueous	trans-1,2-Dichloroethene	8260B	3.1		ug/L	30
013	G4MW011 (031110)	Aqueous	1,1-Dichloroethene	8260B	0.42	J	ug/L	30
013	G4MW011 (031110)	Aqueous	cis-1,2-Dichloroethene	8260B	11		ug/L	30
013	G4MW011 (031110)	Aqueous	Trichloroethene	8260B	5.0		ug/L	31
014	G4MW006 (031210)	Aqueous	Acetone	8260B	1.2	J	ug/L	32
014	G4MW006 (031210)	Aqueous	1,1-Dichloroethane	8260B	0.18	J	ug/L	32
014	G4MW006 (031210)	Aqueous	trans-1,2-Dichloroethene	8260B	3.7		ug/L	32
014	G4MW006 (031210)	Aqueous	1,1-Dichloroethene	8260B	0.48	J	ug/L	32
014	G4MW006 (031210)	Aqueous	cis-1,2-Dichloroethene	8260B	14		ug/L	32
014	G4MW006 (031210)	Aqueous	Trichloroethene	8260B	6.0		ug/L	33
015	G4MW018 (031210)	Aqueous	Acetone	8260B	1.4	J	ug/L	34
015	G4MW018 (031210)	Aqueous	Benzene	8260B	0.10	J	ug/L	34
015	G4MW018 (031210)	Aqueous	1,1-Dichloroethane	8260B	0.13	J	ug/L	34
015	G4MW018 (031210)	Aqueous	trans-1,2-Dichloroethene	8260B	2.4		ug/L	34
015	G4MW018 (031210)	Aqueous	1,1-Dichloroethene	8260B	0.32	J	ug/L	34
015	G4MW018 (031210)	Aqueous	cis-1,2-Dichloroethene	8260B	10		ug/L	34
015	G4MW018 (031210)	Aqueous	Tetrachloroethene	8260B	0.11	J	ug/L	34
015	G4MW018 (031210)	Aqueous	Trichloroethene	8260B	5.3		ug/L	35
016	G4MW010 (031210)	Aqueous	Acetone	8260B	2.5	J	ug/L	36
016	G4MW010 (031210)	Aqueous	Benzene	8260B	0.12	J	ug/L	36
016	G4MW010 (031210)	Aqueous	trans-1,2-Dichloroethene	8260B	1.2		ug/L	36
016	G4MW010 (031210)	Aqueous	1,1-Dichloroethene	8260B	0.14	J	ug/L	36
016	G4MW010 (031210)	Aqueous	cis-1,2-Dichloroethene	8260B	3.8		ug/L	36
016	G4MW010 (031210)	Aqueous	Trichloroethene	8260B	1.4		ug/L	37
017	TRIP BLANK (031010)	Aqueous	Acetone	8260B	1.2	J	ug/L	38

(77 detections)

Volatile Organic Compounds by GC/MS

Client: ARCADIS U.S., Inc.
Laboratory ID: LC13017-001
Description: G4MW019 (031010)
Matrix: Aqueous
Date Sampled: 03/10/2010 0853
Date Received: 03/13/2010

Run	Prep Method	Analytical Method	Dilution	Analysis Date	Analyst	Prep Date	Batch
1	5030B	8260B	1	03/15/2010 2253	DLB		29458

Parameter	CAS Number	Analytical Method	Result	Q	PQL	MDL	Units	Run
Acetone	67-64-1	8260B	1.8	J	10	0.061	ug/L	1
Benzene	71-43-2	8260B	ND		0.50	0.027	ug/L	1
Bromodichloromethane	75-27-4	8260B	ND		0.50	0.17	ug/L	1
Bromoform	75-25-2	8260B	ND		0.50	0.010	ug/L	1
Bromomethane (Methyl bromide)	74-83-9	8260B	ND		0.50	0.20	ug/L	1
2-Butanone (MEK)	78-93-3	8260B	ND		10	2.0	ug/L	1
Carbon disulfide	75-15-0	8260B	0.11	J	0.50	0.097	ug/L	1
Carbon tetrachloride	56-23-5	8260B	ND		0.50	0.085	ug/L	1
Chlorobenzene	108-90-7	8260B	ND		0.50	0.17	ug/L	1
Chloroethane	75-00-3	8260B	ND		0.50	0.17	ug/L	1
Chloroform	67-66-3	8260B	ND		0.50	0.17	ug/L	1
Chloromethane (Methyl chloride)	74-87-3	8260B	ND		0.50	0.17	ug/L	1
Cyclohexane	110-82-7	8260B	ND		0.50	0.30	ug/L	1
1,2-Dibromo-3-chloropropane (DBCP)	96-12-8	8260B	ND		0.50	0.069	ug/L	1
Dibromochloromethane	124-48-1	8260B	ND		0.50	0.17	ug/L	1
1,2-Dibromoethane (EDB)	106-93-4	8260B	ND		0.50	0.061	ug/L	1
1,3-Dichlorobenzene	541-73-1	8260B	ND		0.50	0.17	ug/L	1
1,2-Dichlorobenzene	95-50-1	8260B	ND		0.50	0.17	ug/L	1
1,4-Dichlorobenzene	106-46-7	8260B	ND		0.50	0.17	ug/L	1
Dichlorodifluoromethane	75-71-8	8260B	ND		0.50	0.071	ug/L	1
1,1-Dichloroethane	75-34-3	8260B	0.16	J	0.50	0.054	ug/L	1
1,2-Dichloroethane	107-06-2	8260B	ND		0.50	0.023	ug/L	1
trans-1,2-Dichloroethene	156-60-5	8260B	4.2		0.50	0.079	ug/L	1
1,1-Dichloroethene	75-35-4	8260B	0.43	J	0.50	0.094	ug/L	1
cis-1,2-Dichloroethene	156-59-2	8260B	14		0.50	0.087	ug/L	1
1,2-Dichloropropane	78-87-5	8260B	ND		0.50	0.081	ug/L	1
trans-1,3-Dichloropropene	10061-02-6	8260B	ND		0.50	0.18	ug/L	1
cis-1,3-Dichloropropene	10061-01-5	8260B	ND		0.50	0.090	ug/L	1
Ethylbenzene	100-41-4	8260B	ND		0.50	0.17	ug/L	1
2-Hexanone	591-78-6	8260B	ND		10	0.27	ug/L	1
Isopropylbenzene	98-82-8	8260B	ND		0.50	0.029	ug/L	1
Methyl acetate	79-20-9	8260B	ND		1.0	0.30	ug/L	1
Methyl tertiary butyl ether (MTBE)	1634-04-4	8260B	ND		0.50	0.019	ug/L	1
4-Methyl-2-pentanone	108-10-1	8260B	ND		10	0.31	ug/L	1
Methylcyclohexane	108-87-2	8260B	ND		5.0	0.95	ug/L	1
Methylene chloride	75-09-2	8260B	ND		0.50	0.17	ug/L	1
Styrene	100-42-5	8260B	ND		0.50	0.015	ug/L	1
1,1,2,2-Tetrachloroethane	79-34-5	8260B	ND		0.50	0.013	ug/L	1
Tetrachloroethene	127-18-4	8260B	ND		0.50	0.014	ug/L	1
Toluene	108-88-3	8260B	ND		0.50	0.17	ug/L	1
1,1,2-Trichloro-1,2,2-Trifluoroethane	76-13-1	8260B	ND		0.50	0.30	ug/L	1
1,2,4-Trichlorobenzene	120-82-1	8260B	ND		0.50	0.17	ug/L	1
1,1,1-Trichloroethane	71-55-6	8260B	ND		0.50	0.029	ug/L	1
1,1,2-Trichloroethane	79-00-5	8260B	ND		0.50	0.031	ug/L	1

PQL = Practical quantitation limit
B = Detected in the method blank
E = Quantitation of compound exceeded the calibration range
ND = Not detected at or above the MDL
J = Estimated result < PQL and ≥ MDL
P = The RPD between two GC columns exceeds 40%
Where applicable, all soil sample analysis are reported on a dry weight basis unless flagged with a "W"
N = Recovery is out of criteria
H = Out of holding time

Volatile Organic Compounds by GC/MS

Client: ARCADIS U.S., Inc.
Laboratory ID: LC13017-001
Description: G4MW019 (031010)
Matrix: Aqueous
Date Sampled: 03/10/2010 0853
Date Received: 03/13/2010

Run	Prep Method	Analytical Method	Dilution	Analysis Date	Analyst	Prep Date	Batch
1	5030B	8260B	1	03/15/2010 2253	DLB		29458

Parameter	CAS Number	Analytical Method	Result	Q	PQL	MDL	Units	Run
Trichloroethene	79-01-6	8260B	6.5		0.50	0.024	ug/L	1
Trichlorofluoromethane	75-69-4	8260B	ND		0.50	0.051	ug/L	1
Vinyl chloride	75-01-4	8260B	ND		0.50	0.065	ug/L	1
Xylenes (total)	1330-20-7	8260B	ND		0.50	0.17	ug/L	1

Surrogate	Q	Run 1 % Recovery	Acceptance Limits
1,2-Dichloroethane-d4		99	70-130
Bromofluorobenzene		96	70-130
Toluene-d8		97	70-130

PQL = Practical quantitation limit
B = Detected in the method blank
E = Quantitation of compound exceeded the calibration range
ND = Not detected at or above the MDL
J = Estimated result < PQL and ≥ MDL
P = The RPD between two GC columns exceeds 40%
Where applicable, all soil sample analysis are reported on a dry weight basis unless flagged with a "W"
N = Recovery is out of criteria
H = Out of holding time

Volatile Organic Compounds by GC/MS

Client: ARCADIS U.S., Inc.
Laboratory ID: LC13017-002
Description: G4MW020 (031010)
Matrix: Aqueous
Date Sampled: 03/10/2010 0950
Date Received: 03/13/2010

Run	Prep Method	Analytical Method	Dilution	Analysis Date	Analyst	Prep Date	Batch
1	5030B	8260B	1	03/15/2010 2315	DLB		29458

Parameter	CAS Number	Analytical Method	Result	Q	PQL	MDL	Units	Run
Acetone	67-64-1	8260B	1.2	J	10	0.061	ug/L	1
Benzene	71-43-2	8260B	0.13	J	0.50	0.027	ug/L	1
Bromodichloromethane	75-27-4	8260B	ND		0.50	0.17	ug/L	1
Bromoform	75-25-2	8260B	ND		0.50	0.010	ug/L	1
Bromomethane (Methyl bromide)	74-83-9	8260B	ND		0.50	0.20	ug/L	1
2-Butanone (MEK)	78-93-3	8260B	ND		10	2.0	ug/L	1
Carbon disulfide	75-15-0	8260B	ND		0.50	0.097	ug/L	1
Carbon tetrachloride	56-23-5	8260B	ND		0.50	0.085	ug/L	1
Chlorobenzene	108-90-7	8260B	ND		0.50	0.17	ug/L	1
Chloroethane	75-00-3	8260B	ND		0.50	0.17	ug/L	1
Chloroform	67-66-3	8260B	ND		0.50	0.17	ug/L	1
Chloromethane (Methyl chloride)	74-87-3	8260B	ND		0.50	0.17	ug/L	1
Cyclohexane	110-82-7	8260B	ND		0.50	0.30	ug/L	1
1,2-Dibromo-3-chloropropane (DBCP)	96-12-8	8260B	ND		0.50	0.069	ug/L	1
Dibromochloromethane	124-48-1	8260B	ND		0.50	0.17	ug/L	1
1,2-Dibromoethane (EDB)	106-93-4	8260B	ND		0.50	0.061	ug/L	1
1,3-Dichlorobenzene	541-73-1	8260B	ND		0.50	0.17	ug/L	1
1,2-Dichlorobenzene	95-50-1	8260B	ND		0.50	0.17	ug/L	1
1,4-Dichlorobenzene	106-46-7	8260B	ND		0.50	0.17	ug/L	1
Dichlorodifluoromethane	75-71-8	8260B	ND		0.50	0.071	ug/L	1
1,1-Dichloroethane	75-34-3	8260B	ND		0.50	0.054	ug/L	1
1,2-Dichloroethane	107-06-2	8260B	ND		0.50	0.023	ug/L	1
trans-1,2-Dichloroethene	156-60-5	8260B	0.59		0.50	0.079	ug/L	1
1,1-Dichloroethene	75-35-4	8260B	0.13	J	0.50	0.094	ug/L	1
cis-1,2-Dichloroethene	156-59-2	8260B	8.4		0.50	0.087	ug/L	1
1,2-Dichloropropane	78-87-5	8260B	ND		0.50	0.081	ug/L	1
trans-1,3-Dichloropropene	10061-02-6	8260B	ND		0.50	0.18	ug/L	1
cis-1,3-Dichloropropene	10061-01-5	8260B	ND		0.50	0.090	ug/L	1
Ethylbenzene	100-41-4	8260B	ND		0.50	0.17	ug/L	1
2-Hexanone	591-78-6	8260B	ND		10	0.27	ug/L	1
Isopropylbenzene	98-82-8	8260B	ND		0.50	0.029	ug/L	1
Methyl acetate	79-20-9	8260B	ND		1.0	0.30	ug/L	1
Methyl tertiary butyl ether (MTBE)	1634-04-4	8260B	ND		0.50	0.019	ug/L	1
4-Methyl-2-pentanone	108-10-1	8260B	ND		10	0.31	ug/L	1
Methylcyclohexane	108-87-2	8260B	ND		5.0	0.95	ug/L	1
Methylene chloride	75-09-2	8260B	ND		0.50	0.17	ug/L	1
Styrene	100-42-5	8260B	ND		0.50	0.015	ug/L	1
1,1,2,2-Tetrachloroethane	79-34-5	8260B	ND		0.50	0.013	ug/L	1
Tetrachloroethene	127-18-4	8260B	ND		0.50	0.014	ug/L	1
Toluene	108-88-3	8260B	ND		0.50	0.17	ug/L	1
1,1,2-Trichloro-1,2,2-Trifluoroethane	76-13-1	8260B	ND		0.50	0.30	ug/L	1
1,2,4-Trichlorobenzene	120-82-1	8260B	ND		0.50	0.17	ug/L	1
1,1,1-Trichloroethane	71-55-6	8260B	ND		0.50	0.029	ug/L	1
1,1,2-Trichloroethane	79-00-5	8260B	ND		0.50	0.031	ug/L	1

PQL = Practical quantitation limit
B = Detected in the method blank
E = Quantitation of compound exceeded the calibration range
ND = Not detected at or above the MDL
J = Estimated result < PQL and ≥ MDL
P = The RPD between two GC columns exceeds 40%
Where applicable, all soil sample analysis are reported on a dry weight basis unless flagged with a "W"
N = Recovery is out of criteria
H = Out of holding time

Volatile Organic Compounds by GC/MS

Client: ARCADIS U.S., Inc.
Laboratory ID: LC13017-002
Description: G4MW020 (031010)
Matrix: Aqueous
Date Sampled: 03/10/2010 0950
Date Received: 03/13/2010

Run	Prep Method	Analytical Method	Dilution	Analysis Date	Analyst	Prep Date	Batch
1	5030B	8260B	1	03/15/2010 2315	DLB		29458

Parameter	CAS Number	Analytical Method	Result	Q	PQL	MDL	Units	Run
Trichloroethene	79-01-6	8260B	0.28	J	0.50	0.024	ug/L	1
Trichlorofluoromethane	75-69-4	8260B	ND		0.50	0.051	ug/L	1
Vinyl chloride	75-01-4	8260B	0.23	J	0.50	0.065	ug/L	1
Xylenes (total)	1330-20-7	8260B	ND		0.50	0.17	ug/L	1

Surrogate	Q	Run 1 % Recovery	Acceptance Limits
1,2-Dichloroethane-d4		98	70-130
Bromofluorobenzene		95	70-130
Toluene-d8		99	70-130

PQL = Practical quantitation limit
B = Detected in the method blank
E = Quantitation of compound exceeded the calibration range
ND = Not detected at or above the MDL
J = Estimated result < PQL and ≥ MDL
P = The RPD between two GC columns exceeds 40%
Where applicable, all soil sample analysis are reported on a dry weight basis unless flagged with a "W"
N = Recovery is out of criteria
H = Out of holding time

Volatile Organic Compounds by GC/MS

Client: ARCADIS U.S., Inc.
Laboratory ID: LC13017-003
Description: G4MW023 (031010)
Matrix: Aqueous
Date Sampled: 03/10/2010 1105
Date Received: 03/13/2010

Run	Prep Method	Analytical Method	Dilution	Analysis Date	Analyst	Prep Date	Batch
1	5030B	8260B	1	03/15/2010 2337	DLB		29458

Parameter	CAS Number	Analytical Method	Result	Q	PQL	MDL	Units	Run
Acetone	67-64-1	8260B	1.5	J	10	0.061	ug/L	1
Benzene	71-43-2	8260B	ND		0.50	0.027	ug/L	1
Bromodichloromethane	75-27-4	8260B	ND		0.50	0.17	ug/L	1
Bromoform	75-25-2	8260B	ND		0.50	0.010	ug/L	1
Bromomethane (Methyl bromide)	74-83-9	8260B	ND		0.50	0.20	ug/L	1
2-Butanone (MEK)	78-93-3	8260B	ND		10	2.0	ug/L	1
Carbon disulfide	75-15-0	8260B	ND		0.50	0.097	ug/L	1
Carbon tetrachloride	56-23-5	8260B	ND		0.50	0.085	ug/L	1
Chlorobenzene	108-90-7	8260B	ND		0.50	0.17	ug/L	1
Chloroethane	75-00-3	8260B	ND		0.50	0.17	ug/L	1
Chloroform	67-66-3	8260B	ND		0.50	0.17	ug/L	1
Chloromethane (Methyl chloride)	74-87-3	8260B	ND		0.50	0.17	ug/L	1
Cyclohexane	110-82-7	8260B	ND		0.50	0.30	ug/L	1
1,2-Dibromo-3-chloropropane (DBCP)	96-12-8	8260B	ND		0.50	0.069	ug/L	1
Dibromochloromethane	124-48-1	8260B	ND		0.50	0.17	ug/L	1
1,2-Dibromoethane (EDB)	106-93-4	8260B	ND		0.50	0.061	ug/L	1
1,3-Dichlorobenzene	541-73-1	8260B	ND		0.50	0.17	ug/L	1
1,2-Dichlorobenzene	95-50-1	8260B	ND		0.50	0.17	ug/L	1
1,4-Dichlorobenzene	106-46-7	8260B	ND		0.50	0.17	ug/L	1
Dichlorodifluoromethane	75-71-8	8260B	ND		0.50	0.071	ug/L	1
1,1-Dichloroethane	75-34-3	8260B	ND		0.50	0.054	ug/L	1
1,2-Dichloroethane	107-06-2	8260B	ND		0.50	0.023	ug/L	1
trans-1,2-Dichloroethene	156-60-5	8260B	ND		0.50	0.079	ug/L	1
1,1-Dichloroethene	75-35-4	8260B	ND		0.50	0.094	ug/L	1
cis-1,2-Dichloroethene	156-59-2	8260B	ND		0.50	0.087	ug/L	1
1,2-Dichloropropane	78-87-5	8260B	ND		0.50	0.081	ug/L	1
trans-1,3-Dichloropropene	10061-02-6	8260B	ND		0.50	0.18	ug/L	1
cis-1,3-Dichloropropene	10061-01-5	8260B	ND		0.50	0.090	ug/L	1
Ethylbenzene	100-41-4	8260B	ND		0.50	0.17	ug/L	1
2-Hexanone	591-78-6	8260B	ND		10	0.27	ug/L	1
Isopropylbenzene	98-82-8	8260B	ND		0.50	0.029	ug/L	1
Methyl acetate	79-20-9	8260B	ND		1.0	0.30	ug/L	1
Methyl tertiary butyl ether (MTBE)	1634-04-4	8260B	ND		0.50	0.019	ug/L	1
4-Methyl-2-pentanone	108-10-1	8260B	ND		10	0.31	ug/L	1
Methylcyclohexane	108-87-2	8260B	ND		5.0	0.95	ug/L	1
Methylene chloride	75-09-2	8260B	ND		0.50	0.17	ug/L	1
Styrene	100-42-5	8260B	ND		0.50	0.015	ug/L	1
1,1,2,2-Tetrachloroethane	79-34-5	8260B	ND		0.50	0.013	ug/L	1
Tetrachloroethene	127-18-4	8260B	ND		0.50	0.014	ug/L	1
Toluene	108-88-3	8260B	ND		0.50	0.17	ug/L	1
1,1,2-Trichloro-1,2,2-Trifluoroethane	76-13-1	8260B	ND		0.50	0.30	ug/L	1
1,2,4-Trichlorobenzene	120-82-1	8260B	ND		0.50	0.17	ug/L	1
1,1,1-Trichloroethane	71-55-6	8260B	ND		0.50	0.029	ug/L	1
1,1,2-Trichloroethane	79-00-5	8260B	ND		0.50	0.031	ug/L	1

PQL = Practical quantitation limit
B = Detected in the method blank
E = Quantitation of compound exceeded the calibration range
ND = Not detected at or above the MDL
J = Estimated result < PQL and ≥ MDL
P = The RPD between two GC columns exceeds 40%
Where applicable, all soil sample analysis are reported on a dry weight basis unless flagged with a "W"
N = Recovery is out of criteria
H = Out of holding time

Volatile Organic Compounds by GC/MS

Client: ARCADIS U.S., Inc.
Laboratory ID: LC13017-003
Description: G4MW023 (031010)
Matrix: Aqueous
Date Sampled: 03/10/2010 1105
Date Received: 03/13/2010

Run	Prep Method	Analytical Method	Dilution	Analysis Date	Analyst	Prep Date	Batch
1	5030B	8260B	1	03/15/2010 2337	DLB		29458

Parameter	CAS Number	Analytical Method	Result	Q	PQL	MDL	Units	Run
Trichloroethene	79-01-6	8260B	ND		0.50	0.024	ug/L	1
Trichlorofluoromethane	75-69-4	8260B	ND		0.50	0.051	ug/L	1
Vinyl chloride	75-01-4	8260B	ND		0.50	0.065	ug/L	1
Xylenes (total)	1330-20-7	8260B	ND		0.50	0.17	ug/L	1

Surrogate	Q	Run 1 % Recovery	Acceptance Limits
1,2-Dichloroethane-d4		99	70-130
Bromofluorobenzene		95	70-130
Toluene-d8		99	70-130

PQL = Practical quantitation limit
B = Detected in the method blank
E = Quantitation of compound exceeded the calibration range
ND = Not detected at or above the MDL
J = Estimated result < PQL and ≥ MDL
P = The RPD between two GC columns exceeds 40%
Where applicable, all soil sample analysis are reported on a dry weight basis unless flagged with a "W"
N = Recovery is out of criteria
H = Out of holding time

Volatile Organic Compounds by GC/MS

Client: ARCADIS U.S., Inc.
Laboratory ID: LC13017-004
Description: G4MW016 (031010)
Matrix: Aqueous
Date Sampled: 03/10/2010 1222
Date Received: 03/13/2010

Run	Prep Method	Analytical Method	Dilution	Analysis Date	Analyst	Prep Date	Batch
1	5030B	8260B	1	03/16/2010 0000	DLB		29458

Parameter	CAS Number	Analytical Method	Result	Q	PQL	MDL	Units	Run
Acetone	67-64-1	8260B	1.3	J	10	0.061	ug/L	1
Benzene	71-43-2	8260B	0.23	J	0.50	0.027	ug/L	1
Bromodichloromethane	75-27-4	8260B	ND		0.50	0.17	ug/L	1
Bromoform	75-25-2	8260B	ND		0.50	0.010	ug/L	1
Bromomethane (Methyl bromide)	74-83-9	8260B	ND		0.50	0.20	ug/L	1
2-Butanone (MEK)	78-93-3	8260B	ND		10	2.0	ug/L	1
Carbon disulfide	75-15-0	8260B	ND		0.50	0.097	ug/L	1
Carbon tetrachloride	56-23-5	8260B	ND		0.50	0.085	ug/L	1
Chlorobenzene	108-90-7	8260B	ND		0.50	0.17	ug/L	1
Chloroethane	75-00-3	8260B	ND		0.50	0.17	ug/L	1
Chloroform	67-66-3	8260B	ND		0.50	0.17	ug/L	1
Chloromethane (Methyl chloride)	74-87-3	8260B	ND		0.50	0.17	ug/L	1
Cyclohexane	110-82-7	8260B	ND		0.50	0.30	ug/L	1
1,2-Dibromo-3-chloropropane (DBCP)	96-12-8	8260B	ND		0.50	0.069	ug/L	1
Dibromochloromethane	124-48-1	8260B	ND		0.50	0.17	ug/L	1
1,2-Dibromoethane (EDB)	106-93-4	8260B	ND		0.50	0.061	ug/L	1
1,3-Dichlorobenzene	541-73-1	8260B	ND		0.50	0.17	ug/L	1
1,2-Dichlorobenzene	95-50-1	8260B	ND		0.50	0.17	ug/L	1
1,4-Dichlorobenzene	106-46-7	8260B	ND		0.50	0.17	ug/L	1
Dichlorodifluoromethane	75-71-8	8260B	ND		0.50	0.071	ug/L	1
1,1-Dichloroethane	75-34-3	8260B	ND		0.50	0.054	ug/L	1
1,2-Dichloroethane	107-06-2	8260B	ND		0.50	0.023	ug/L	1
trans-1,2-Dichloroethene	156-60-5	8260B	1.1		0.50	0.079	ug/L	1
1,1-Dichloroethene	75-35-4	8260B	0.13	J	0.50	0.094	ug/L	1
cis-1,2-Dichloroethene	156-59-2	8260B	4.1		0.50	0.087	ug/L	1
1,2-Dichloropropane	78-87-5	8260B	ND		0.50	0.081	ug/L	1
trans-1,3-Dichloropropene	10061-02-6	8260B	ND		0.50	0.18	ug/L	1
cis-1,3-Dichloropropene	10061-01-5	8260B	ND		0.50	0.090	ug/L	1
Ethylbenzene	100-41-4	8260B	ND		0.50	0.17	ug/L	1
2-Hexanone	591-78-6	8260B	ND		10	0.27	ug/L	1
Isopropylbenzene	98-82-8	8260B	ND		0.50	0.029	ug/L	1
Methyl acetate	79-20-9	8260B	ND		1.0	0.30	ug/L	1
Methyl tertiary butyl ether (MTBE)	1634-04-4	8260B	ND		0.50	0.019	ug/L	1
4-Methyl-2-pentanone	108-10-1	8260B	ND		10	0.31	ug/L	1
Methylcyclohexane	108-87-2	8260B	ND		5.0	0.95	ug/L	1
Methylene chloride	75-09-2	8260B	ND		0.50	0.17	ug/L	1
Styrene	100-42-5	8260B	ND		0.50	0.015	ug/L	1
1,1,2,2-Tetrachloroethane	79-34-5	8260B	ND		0.50	0.013	ug/L	1
Tetrachloroethene	127-18-4	8260B	2.6		0.50	0.014	ug/L	1
Toluene	108-88-3	8260B	ND		0.50	0.17	ug/L	1
1,1,2-Trichloro-1,2,2-Trifluoroethane	76-13-1	8260B	ND		0.50	0.30	ug/L	1
1,2,4-Trichlorobenzene	120-82-1	8260B	ND		0.50	0.17	ug/L	1
1,1,1-Trichloroethane	71-55-6	8260B	ND		0.50	0.029	ug/L	1
1,1,2-Trichloroethane	79-00-5	8260B	ND		0.50	0.031	ug/L	1

PQL = Practical quantitation limit
B = Detected in the method blank
E = Quantitation of compound exceeded the calibration range
ND = Not detected at or above the MDL
J = Estimated result < PQL and ≥ MDL
P = The RPD between two GC columns exceeds 40%
Where applicable, all soil sample analysis are reported on a dry weight basis unless flagged with a "W"
N = Recovery is out of criteria
H = Out of holding time

Volatile Organic Compounds by GC/MS

Client: ARCADIS U.S., Inc.
Laboratory ID: LC13017-004
Description: G4MW016 (031010)
Matrix: Aqueous
Date Sampled: 03/10/2010 1222
Date Received: 03/13/2010

Run	Prep Method	Analytical Method	Dilution	Analysis Date	Analyst	Prep Date	Batch
1	5030B	8260B	1	03/16/2010 0000	DLB		29458

Parameter	CAS Number	Analytical Method	Result	Q	PQL	MDL	Units	Run
Trichloroethene	79-01-6	8260B	23		0.50	0.024	ug/L	1
Trichlorofluoromethane	75-69-4	8260B	ND		0.50	0.051	ug/L	1
Vinyl chloride	75-01-4	8260B	ND		0.50	0.065	ug/L	1
Xylenes (total)	1330-20-7	8260B	ND		0.50	0.17	ug/L	1

Surrogate	Q	Run 1 % Recovery	Acceptance Limits
1,2-Dichloroethane-d4		99	70-130
Bromofluorobenzene		93	70-130
Toluene-d8		96	70-130

PQL = Practical quantitation limit
B = Detected in the method blank
E = Quantitation of compound exceeded the calibration range
ND = Not detected at or above the MDL
J = Estimated result < PQL and ≥ MDL
P = The RPD between two GC columns exceeds 40%
Where applicable, all soil sample analysis are reported on a dry weight basis unless flagged with a "W"
N = Recovery is out of criteria
H = Out of holding time

Volatile Organic Compounds by GC/MS

Client: ARCADIS U.S., Inc.
Laboratory ID: LC13017-005
Description: G4MW017 (031010)
Matrix: Aqueous
Date Sampled: 03/10/2010 1250
Date Received: 03/13/2010

Run	Prep Method	Analytical Method	Dilution	Analysis Date	Analyst	Prep Date	Batch
1	5030B	8260B	1	03/16/2010 0022	DLB		29458

Parameter	CAS Number	Analytical Method	Result	Q	PQL	MDL	Units	Run
Acetone	67-64-1	8260B	1.9	J	10	0.061	ug/L	1
Benzene	71-43-2	8260B	ND		0.50	0.027	ug/L	1
Bromodichloromethane	75-27-4	8260B	ND		0.50	0.17	ug/L	1
Bromoform	75-25-2	8260B	ND		0.50	0.010	ug/L	1
Bromomethane (Methyl bromide)	74-83-9	8260B	ND		0.50	0.20	ug/L	1
2-Butanone (MEK)	78-93-3	8260B	ND		10	2.0	ug/L	1
Carbon disulfide	75-15-0	8260B	ND		0.50	0.097	ug/L	1
Carbon tetrachloride	56-23-5	8260B	ND		0.50	0.085	ug/L	1
Chlorobenzene	108-90-7	8260B	ND		0.50	0.17	ug/L	1
Chloroethane	75-00-3	8260B	ND		0.50	0.17	ug/L	1
Chloroform	67-66-3	8260B	ND		0.50	0.17	ug/L	1
Chloromethane (Methyl chloride)	74-87-3	8260B	ND		0.50	0.17	ug/L	1
Cyclohexane	110-82-7	8260B	ND		0.50	0.30	ug/L	1
1,2-Dibromo-3-chloropropane (DBCP)	96-12-8	8260B	ND		0.50	0.069	ug/L	1
Dibromochloromethane	124-48-1	8260B	ND		0.50	0.17	ug/L	1
1,2-Dibromoethane (EDB)	106-93-4	8260B	ND		0.50	0.061	ug/L	1
1,3-Dichlorobenzene	541-73-1	8260B	ND		0.50	0.17	ug/L	1
1,2-Dichlorobenzene	95-50-1	8260B	ND		0.50	0.17	ug/L	1
1,4-Dichlorobenzene	106-46-7	8260B	ND		0.50	0.17	ug/L	1
Dichlorodifluoromethane	75-71-8	8260B	ND		0.50	0.071	ug/L	1
1,1-Dichloroethane	75-34-3	8260B	ND		0.50	0.054	ug/L	1
1,2-Dichloroethane	107-06-2	8260B	ND		0.50	0.023	ug/L	1
trans-1,2-Dichloroethene	156-60-5	8260B	0.65		0.50	0.079	ug/L	1
1,1-Dichloroethene	75-35-4	8260B	ND		0.50	0.094	ug/L	1
cis-1,2-Dichloroethene	156-59-2	8260B	2.2		0.50	0.087	ug/L	1
1,2-Dichloropropane	78-87-5	8260B	ND		0.50	0.081	ug/L	1
trans-1,3-Dichloropropene	10061-02-6	8260B	ND		0.50	0.18	ug/L	1
cis-1,3-Dichloropropene	10061-01-5	8260B	ND		0.50	0.090	ug/L	1
Ethylbenzene	100-41-4	8260B	ND		0.50	0.17	ug/L	1
2-Hexanone	591-78-6	8260B	ND		10	0.27	ug/L	1
Isopropylbenzene	98-82-8	8260B	ND		0.50	0.029	ug/L	1
Methyl acetate	79-20-9	8260B	ND		1.0	0.30	ug/L	1
Methyl tertiary butyl ether (MTBE)	1634-04-4	8260B	ND		0.50	0.019	ug/L	1
4-Methyl-2-pentanone	108-10-1	8260B	ND		10	0.31	ug/L	1
Methylcyclohexane	108-87-2	8260B	ND		5.0	0.95	ug/L	1
Methylene chloride	75-09-2	8260B	ND		0.50	0.17	ug/L	1
Styrene	100-42-5	8260B	ND		0.50	0.015	ug/L	1
1,1,2,2-Tetrachloroethane	79-34-5	8260B	ND		0.50	0.013	ug/L	1
Tetrachloroethene	127-18-4	8260B	ND		0.50	0.014	ug/L	1
Toluene	108-88-3	8260B	ND		0.50	0.17	ug/L	1
1,1,2-Trichloro-1,2,2-Trifluoroethane	76-13-1	8260B	ND		0.50	0.30	ug/L	1
1,2,4-Trichlorobenzene	120-82-1	8260B	ND		0.50	0.17	ug/L	1
1,1,1-Trichloroethane	71-55-6	8260B	ND		0.50	0.029	ug/L	1
1,1,2-Trichloroethane	79-00-5	8260B	ND		0.50	0.031	ug/L	1

PQL = Practical quantitation limit
B = Detected in the method blank
E = Quantitation of compound exceeded the calibration range
ND = Not detected at or above the MDL
J = Estimated result < PQL and ≥ MDL
P = The RPD between two GC columns exceeds 40%
Where applicable, all soil sample analysis are reported on a dry weight basis unless flagged with a "W"
N = Recovery is out of criteria
H = Out of holding time

Volatile Organic Compounds by GC/MS

Client: ARCADIS U.S., Inc.
Laboratory ID: LC13017-005
Description: G4MW017 (031010)
Matrix: Aqueous
Date Sampled: 03/10/2010 1250
Date Received: 03/13/2010

Run	Prep Method	Analytical Method	Dilution	Analysis Date	Analyst	Prep Date	Batch
1	5030B	8260B	1	03/16/2010 0022	DLB		29458

Parameter	CAS Number	Analytical Method	Result	Q	PQL	MDL	Units	Run
Trichloroethene	79-01-6	8260B	6.8		0.50	0.024	ug/L	1
Trichlorofluoromethane	75-69-4	8260B	ND		0.50	0.051	ug/L	1
Vinyl chloride	75-01-4	8260B	ND		0.50	0.065	ug/L	1
Xylenes (total)	1330-20-7	8260B	ND		0.50	0.17	ug/L	1

Surrogate	Q	Run 1 % Recovery	Acceptance Limits
1,2-Dichloroethane-d4		99	70-130
Bromofluorobenzene		95	70-130
Toluene-d8		99	70-130

PQL = Practical quantitation limit
B = Detected in the method blank
E = Quantitation of compound exceeded the calibration range
ND = Not detected at or above the MDL
J = Estimated result < PQL and ≥ MDL
P = The RPD between two GC columns exceeds 40%
Where applicable, all soil sample analysis are reported on a dry weight basis unless flagged with a "W"
N = Recovery is out of criteria
H = Out of holding time

Volatile Organic Compounds by GC/MS

Client: ARCADIS U.S., Inc.
Laboratory ID: LC13017-006
Description: G4MW025 (031010)
Matrix: Aqueous
Date Sampled: 03/10/2010 1351
Date Received: 03/13/2010

Run	Prep Method	Analytical Method	Dilution	Analysis Date	Analyst	Prep Date	Batch
1	5030B	8260B	1	03/16/2010 0043	DLB		29458

Parameter	CAS Number	Analytical Method	Result	Q	PQL	MDL	Units	Run
Acetone	67-64-1	8260B	1.8	J	10	0.061	ug/L	1
Benzene	71-43-2	8260B	ND		0.50	0.027	ug/L	1
Bromodichloromethane	75-27-4	8260B	ND		0.50	0.17	ug/L	1
Bromoform	75-25-2	8260B	ND		0.50	0.010	ug/L	1
Bromomethane (Methyl bromide)	74-83-9	8260B	ND		0.50	0.20	ug/L	1
2-Butanone (MEK)	78-93-3	8260B	ND		10	2.0	ug/L	1
Carbon disulfide	75-15-0	8260B	ND		0.50	0.097	ug/L	1
Carbon tetrachloride	56-23-5	8260B	ND		0.50	0.085	ug/L	1
Chlorobenzene	108-90-7	8260B	ND		0.50	0.17	ug/L	1
Chloroethane	75-00-3	8260B	ND		0.50	0.17	ug/L	1
Chloroform	67-66-3	8260B	ND		0.50	0.17	ug/L	1
Chloromethane (Methyl chloride)	74-87-3	8260B	ND		0.50	0.17	ug/L	1
Cyclohexane	110-82-7	8260B	ND		0.50	0.30	ug/L	1
1,2-Dibromo-3-chloropropane (DBCP)	96-12-8	8260B	ND		0.50	0.069	ug/L	1
Dibromochloromethane	124-48-1	8260B	ND		0.50	0.17	ug/L	1
1,2-Dibromoethane (EDB)	106-93-4	8260B	ND		0.50	0.061	ug/L	1
1,3-Dichlorobenzene	541-73-1	8260B	ND		0.50	0.17	ug/L	1
1,2-Dichlorobenzene	95-50-1	8260B	ND		0.50	0.17	ug/L	1
1,4-Dichlorobenzene	106-46-7	8260B	ND		0.50	0.17	ug/L	1
Dichlorodifluoromethane	75-71-8	8260B	ND		0.50	0.071	ug/L	1
1,1-Dichloroethane	75-34-3	8260B	0.23	J	0.50	0.054	ug/L	1
1,2-Dichloroethane	107-06-2	8260B	ND		0.50	0.023	ug/L	1
trans-1,2-Dichloroethene	156-60-5	8260B	2.3		0.50	0.079	ug/L	1
1,1-Dichloroethene	75-35-4	8260B	0.38	J	0.50	0.094	ug/L	1
cis-1,2-Dichloroethene	156-59-2	8260B	8.3		0.50	0.087	ug/L	1
1,2-Dichloropropane	78-87-5	8260B	ND		0.50	0.081	ug/L	1
trans-1,3-Dichloropropene	10061-02-6	8260B	ND		0.50	0.18	ug/L	1
cis-1,3-Dichloropropene	10061-01-5	8260B	ND		0.50	0.090	ug/L	1
Ethylbenzene	100-41-4	8260B	ND		0.50	0.17	ug/L	1
2-Hexanone	591-78-6	8260B	ND		10	0.27	ug/L	1
Isopropylbenzene	98-82-8	8260B	ND		0.50	0.029	ug/L	1
Methyl acetate	79-20-9	8260B	ND		1.0	0.30	ug/L	1
Methyl tertiary butyl ether (MTBE)	1634-04-4	8260B	ND		0.50	0.019	ug/L	1
4-Methyl-2-pentanone	108-10-1	8260B	ND		10	0.31	ug/L	1
Methylcyclohexane	108-87-2	8260B	ND		5.0	0.95	ug/L	1
Methylene chloride	75-09-2	8260B	ND		0.50	0.17	ug/L	1
Styrene	100-42-5	8260B	ND		0.50	0.015	ug/L	1
1,1,2,2-Tetrachloroethane	79-34-5	8260B	ND		0.50	0.013	ug/L	1
Tetrachloroethene	127-18-4	8260B	ND		0.50	0.014	ug/L	1
Toluene	108-88-3	8260B	ND		0.50	0.17	ug/L	1
1,1,2-Trichloro-1,2,2-Trifluoroethane	76-13-1	8260B	ND		0.50	0.30	ug/L	1
1,2,4-Trichlorobenzene	120-82-1	8260B	ND		0.50	0.17	ug/L	1
1,1,1-Trichloroethane	71-55-6	8260B	ND		0.50	0.029	ug/L	1
1,1,2-Trichloroethane	79-00-5	8260B	ND		0.50	0.031	ug/L	1

PQL = Practical quantitation limit
B = Detected in the method blank
E = Quantitation of compound exceeded the calibration range
ND = Not detected at or above the MDL
J = Estimated result < PQL and ≥ MDL
P = The RPD between two GC columns exceeds 40%
Where applicable, all soil sample analysis are reported on a dry weight basis unless flagged with a "W"
N = Recovery is out of criteria
H = Out of holding time

Volatile Organic Compounds by GC/MS

Client: ARCADIS U.S., Inc.
Laboratory ID: LC13017-006
Description: G4MW025 (031010)
Matrix: Aqueous
Date Sampled: 03/10/2010 1351
Date Received: 03/13/2010

Run	Prep Method	Analytical Method	Dilution	Analysis Date	Analyst	Prep Date	Batch
1	5030B	8260B	1	03/16/2010 0043	DLB		29458

Parameter	CAS Number	Analytical Method	Result	Q	PQL	MDL	Units	Run
Trichloroethene	79-01-6	8260B	5.6		0.50	0.024	ug/L	1
Trichlorofluoromethane	75-69-4	8260B	ND		0.50	0.051	ug/L	1
Vinyl chloride	75-01-4	8260B	ND		0.50	0.065	ug/L	1
Xylenes (total)	1330-20-7	8260B	ND		0.50	0.17	ug/L	1

Surrogate	Q	Run 1 % Recovery	Acceptance Limits
1,2-Dichloroethane-d4		101	70-130
Bromofluorobenzene		94	70-130
Toluene-d8		99	70-130

PQL = Practical quantitation limit
B = Detected in the method blank
E = Quantitation of compound exceeded the calibration range
ND = Not detected at or above the MDL
J = Estimated result < PQL and ≥ MDL
P = The RPD between two GC columns exceeds 40%
Where applicable, all soil sample analysis are reported on a dry weight basis unless flagged with a "W"
N = Recovery is out of criteria
H = Out of holding time

Volatile Organic Compounds by GC/MS

Client: ARCADIS U.S., Inc.
Laboratory ID: LC13017-007
Description: G4MW024 (031010)
Matrix: Aqueous
Date Sampled: 03/10/2010 1440
Date Received: 03/13/2010

Run	Prep Method	Analytical Method	Dilution	Analysis Date	Analyst	Prep Date	Batch
1	5030B	8260B	1	03/16/2010 0105	DLB		29458

Parameter	CAS Number	Analytical Method	Result	Q	PQL	MDL	Units	Run
Acetone	67-64-1	8260B	3.0	J	10	0.061	ug/L	1
Benzene	71-43-2	8260B	0.10	J	0.50	0.027	ug/L	1
Bromodichloromethane	75-27-4	8260B	ND		0.50	0.17	ug/L	1
Bromoform	75-25-2	8260B	ND		0.50	0.010	ug/L	1
Bromomethane (Methyl bromide)	74-83-9	8260B	ND		0.50	0.20	ug/L	1
2-Butanone (MEK)	78-93-3	8260B	ND		10	2.0	ug/L	1
Carbon disulfide	75-15-0	8260B	ND		0.50	0.097	ug/L	1
Carbon tetrachloride	56-23-5	8260B	ND		0.50	0.085	ug/L	1
Chlorobenzene	108-90-7	8260B	ND		0.50	0.17	ug/L	1
Chloroethane	75-00-3	8260B	ND		0.50	0.17	ug/L	1
Chloroform	67-66-3	8260B	ND		0.50	0.17	ug/L	1
Chloromethane (Methyl chloride)	74-87-3	8260B	ND		0.50	0.17	ug/L	1
Cyclohexane	110-82-7	8260B	ND		0.50	0.30	ug/L	1
1,2-Dibromo-3-chloropropane (DBCP)	96-12-8	8260B	ND		0.50	0.069	ug/L	1
Dibromochloromethane	124-48-1	8260B	ND		0.50	0.17	ug/L	1
1,2-Dibromoethane (EDB)	106-93-4	8260B	ND		0.50	0.061	ug/L	1
1,3-Dichlorobenzene	541-73-1	8260B	ND		0.50	0.17	ug/L	1
1,2-Dichlorobenzene	95-50-1	8260B	ND		0.50	0.17	ug/L	1
1,4-Dichlorobenzene	106-46-7	8260B	ND		0.50	0.17	ug/L	1
Dichlorodifluoromethane	75-71-8	8260B	ND		0.50	0.071	ug/L	1
1,1-Dichloroethane	75-34-3	8260B	0.11	J	0.50	0.054	ug/L	1
1,2-Dichloroethane	107-06-2	8260B	ND		0.50	0.023	ug/L	1
trans-1,2-Dichloroethene	156-60-5	8260B	1.7		0.50	0.079	ug/L	1
1,1-Dichloroethene	75-35-4	8260B	0.28	J	0.50	0.094	ug/L	1
cis-1,2-Dichloroethene	156-59-2	8260B	6.1		0.50	0.087	ug/L	1
1,2-Dichloropropane	78-87-5	8260B	ND		0.50	0.081	ug/L	1
trans-1,3-Dichloropropene	10061-02-6	8260B	ND		0.50	0.18	ug/L	1
cis-1,3-Dichloropropene	10061-01-5	8260B	ND		0.50	0.090	ug/L	1
Ethylbenzene	100-41-4	8260B	ND		0.50	0.17	ug/L	1
2-Hexanone	591-78-6	8260B	ND		10	0.27	ug/L	1
Isopropylbenzene	98-82-8	8260B	ND		0.50	0.029	ug/L	1
Methyl acetate	79-20-9	8260B	ND		1.0	0.30	ug/L	1
Methyl tertiary butyl ether (MTBE)	1634-04-4	8260B	ND		0.50	0.019	ug/L	1
4-Methyl-2-pentanone	108-10-1	8260B	ND		10	0.31	ug/L	1
Methylcyclohexane	108-87-2	8260B	ND		5.0	0.95	ug/L	1
Methylene chloride	75-09-2	8260B	ND		0.50	0.17	ug/L	1
Styrene	100-42-5	8260B	ND		0.50	0.015	ug/L	1
1,1,2,2-Tetrachloroethane	79-34-5	8260B	ND		0.50	0.013	ug/L	1
Tetrachloroethene	127-18-4	8260B	ND		0.50	0.014	ug/L	1
Toluene	108-88-3	8260B	ND		0.50	0.17	ug/L	1
1,1,2-Trichloro-1,2,2-Trifluoroethane	76-13-1	8260B	ND		0.50	0.30	ug/L	1
1,2,4-Trichlorobenzene	120-82-1	8260B	ND		0.50	0.17	ug/L	1
1,1,1-Trichloroethane	71-55-6	8260B	ND		0.50	0.029	ug/L	1
1,1,2-Trichloroethane	79-00-5	8260B	ND		0.50	0.031	ug/L	1

PQL = Practical quantitation limit
B = Detected in the method blank
E = Quantitation of compound exceeded the calibration range
ND = Not detected at or above the MDL
J = Estimated result < PQL and ≥ MDL
P = The RPD between two GC columns exceeds 40%
Where applicable, all soil sample analysis are reported on a dry weight basis unless flagged with a "W"
N = Recovery is out of criteria
H = Out of holding time

Volatile Organic Compounds by GC/MS

Client: ARCADIS U.S., Inc.
Laboratory ID: LC13017-007
Description: G4MW024 (031010)
Matrix: Aqueous
Date Sampled: 03/10/2010 1440
Date Received: 03/13/2010

Run	Prep Method	Analytical Method	Dilution	Analysis Date	Analyst	Prep Date	Batch
1	5030B	8260B	1	03/16/2010 0105	DLB		29458

Parameter	CAS Number	Analytical Method	Result	Q	PQL	MDL	Units	Run
Trichloroethene	79-01-6	8260B	1.5		0.50	0.024	ug/L	1
Trichlorofluoromethane	75-69-4	8260B	ND		0.50	0.051	ug/L	1
Vinyl chloride	75-01-4	8260B	ND		0.50	0.065	ug/L	1
Xylenes (total)	1330-20-7	8260B	ND		0.50	0.17	ug/L	1

Surrogate	Q	Run 1 % Recovery	Acceptance Limits
1,2-Dichloroethane-d4		99	70-130
Bromofluorobenzene		93	70-130
Toluene-d8		98	70-130

PQL = Practical quantitation limit
B = Detected in the method blank
E = Quantitation of compound exceeded the calibration range
ND = Not detected at or above the MDL
J = Estimated result < PQL and ≥ MDL
P = The RPD between two GC columns exceeds 40%
Where applicable, all soil sample analysis are reported on a dry weight basis unless flagged with a "W"
N = Recovery is out of criteria
H = Out of holding time

Volatile Organic Compounds by GC/MS

Client: ARCADIS U.S., Inc.
Laboratory ID: LC13017-008
Description: G4MW031 (031010)
Matrix: Aqueous
Date Sampled: 03/10/2010 1625
Date Received: 03/13/2010

Run	Prep Method	Analytical Method	Dilution	Analysis Date	Analyst	Prep Date	Batch
1	5030B	8260B	1	03/16/2010 0127	DLB		29458

Parameter	CAS Number	Analytical Method	Result	Q	PQL	MDL	Units	Run
Acetone	67-64-1	8260B	1.3	J	10	0.061	ug/L	1
Benzene	71-43-2	8260B	ND		0.50	0.027	ug/L	1
Bromodichloromethane	75-27-4	8260B	ND		0.50	0.17	ug/L	1
Bromoform	75-25-2	8260B	ND		0.50	0.010	ug/L	1
Bromomethane (Methyl bromide)	74-83-9	8260B	ND		0.50	0.20	ug/L	1
2-Butanone (MEK)	78-93-3	8260B	ND		10	2.0	ug/L	1
Carbon disulfide	75-15-0	8260B	ND		0.50	0.097	ug/L	1
Carbon tetrachloride	56-23-5	8260B	ND		0.50	0.085	ug/L	1
Chlorobenzene	108-90-7	8260B	ND		0.50	0.17	ug/L	1
Chloroethane	75-00-3	8260B	ND		0.50	0.17	ug/L	1
Chloroform	67-66-3	8260B	ND		0.50	0.17	ug/L	1
Chloromethane (Methyl chloride)	74-87-3	8260B	ND		0.50	0.17	ug/L	1
Cyclohexane	110-82-7	8260B	ND		0.50	0.30	ug/L	1
1,2-Dibromo-3-chloropropane (DBCP)	96-12-8	8260B	ND		0.50	0.069	ug/L	1
Dibromochloromethane	124-48-1	8260B	ND		0.50	0.17	ug/L	1
1,2-Dibromoethane (EDB)	106-93-4	8260B	ND		0.50	0.061	ug/L	1
1,3-Dichlorobenzene	541-73-1	8260B	ND		0.50	0.17	ug/L	1
1,2-Dichlorobenzene	95-50-1	8260B	ND		0.50	0.17	ug/L	1
1,4-Dichlorobenzene	106-46-7	8260B	ND		0.50	0.17	ug/L	1
Dichlorodifluoromethane	75-71-8	8260B	ND		0.50	0.071	ug/L	1
1,1-Dichloroethane	75-34-3	8260B	ND		0.50	0.054	ug/L	1
1,2-Dichloroethane	107-06-2	8260B	ND		0.50	0.023	ug/L	1
trans-1,2-Dichloroethene	156-60-5	8260B	ND		0.50	0.079	ug/L	1
1,1-Dichloroethene	75-35-4	8260B	ND		0.50	0.094	ug/L	1
cis-1,2-Dichloroethene	156-59-2	8260B	ND		0.50	0.087	ug/L	1
1,2-Dichloropropane	78-87-5	8260B	ND		0.50	0.081	ug/L	1
trans-1,3-Dichloropropene	10061-02-6	8260B	ND		0.50	0.18	ug/L	1
cis-1,3-Dichloropropene	10061-01-5	8260B	ND		0.50	0.090	ug/L	1
Ethylbenzene	100-41-4	8260B	ND		0.50	0.17	ug/L	1
2-Hexanone	591-78-6	8260B	ND		10	0.27	ug/L	1
Isopropylbenzene	98-82-8	8260B	ND		0.50	0.029	ug/L	1
Methyl acetate	79-20-9	8260B	ND		1.0	0.30	ug/L	1
Methyl tertiary butyl ether (MTBE)	1634-04-4	8260B	ND		0.50	0.019	ug/L	1
4-Methyl-2-pentanone	108-10-1	8260B	ND		10	0.31	ug/L	1
Methylcyclohexane	108-87-2	8260B	ND		5.0	0.95	ug/L	1
Methylene chloride	75-09-2	8260B	ND		0.50	0.17	ug/L	1
Styrene	100-42-5	8260B	ND		0.50	0.015	ug/L	1
1,1,2,2-Tetrachloroethane	79-34-5	8260B	ND		0.50	0.013	ug/L	1
Tetrachloroethene	127-18-4	8260B	ND		0.50	0.014	ug/L	1
Toluene	108-88-3	8260B	ND		0.50	0.17	ug/L	1
1,1,2-Trichloro-1,2,2-Trifluoroethane	76-13-1	8260B	ND		0.50	0.30	ug/L	1
1,2,4-Trichlorobenzene	120-82-1	8260B	ND		0.50	0.17	ug/L	1
1,1,1-Trichloroethane	71-55-6	8260B	ND		0.50	0.029	ug/L	1
1,1,2-Trichloroethane	79-00-5	8260B	ND		0.50	0.031	ug/L	1

PQL = Practical quantitation limit
B = Detected in the method blank
E = Quantitation of compound exceeded the calibration range
ND = Not detected at or above the MDL
J = Estimated result < PQL and ≥ MDL
P = The RPD between two GC columns exceeds 40%
Where applicable, all soil sample analysis are reported on a dry weight basis unless flagged with a "W"
N = Recovery is out of criteria
H = Out of holding time

Volatile Organic Compounds by GC/MS

Client: ARCADIS U.S., Inc.
Laboratory ID: LC13017-008
Description: G4MW031 (031010)
Matrix: Aqueous
Date Sampled: 03/10/2010 1625
Date Received: 03/13/2010

Run	Prep Method	Analytical Method	Dilution	Analysis Date	Analyst	Prep Date	Batch
1	5030B	8260B	1	03/16/2010 0127	DLB		29458

Parameter	CAS Number	Analytical Method	Result	Q	PQL	MDL	Units	Run
Trichloroethene	79-01-6	8260B	ND		0.50	0.024	ug/L	1
Trichlorofluoromethane	75-69-4	8260B	ND		0.50	0.051	ug/L	1
Vinyl chloride	75-01-4	8260B	ND		0.50	0.065	ug/L	1
Xylenes (total)	1330-20-7	8260B	ND		0.50	0.17	ug/L	1

Surrogate	Q	Run 1 % Recovery	Acceptance Limits
1,2-Dichloroethane-d4		101	70-130
Bromofluorobenzene		95	70-130
Toluene-d8		100	70-130

PQL = Practical quantitation limit
B = Detected in the method blank
E = Quantitation of compound exceeded the calibration range
ND = Not detected at or above the MDL
J = Estimated result < PQL and ≥ MDL
P = The RPD between two GC columns exceeds 40%
Where applicable, all soil sample analysis are reported on a dry weight basis unless flagged with a "W"
N = Recovery is out of criteria
H = Out of holding time

Volatile Organic Compounds by GC/MS

Client: ARCADIS U.S., Inc.
Laboratory ID: LC13017-009
Description: DUP-5 (031110)
Matrix: Aqueous
Date Sampled: 03/11/2010 0700
Date Received: 03/13/2010

Run	Prep Method	Analytical Method	Dilution	Analysis Date	Analyst	Prep Date	Batch
1	5030B	8260B	1	03/16/2010 0148	DLB		29458

Parameter	CAS Number	Analytical Method	Result	Q	PQL	MDL	Units	Run
Acetone	67-64-1	8260B	1.5	J	10	0.061	ug/L	1
Benzene	71-43-2	8260B	ND		0.50	0.027	ug/L	1
Bromodichloromethane	75-27-4	8260B	ND		0.50	0.17	ug/L	1
Bromoform	75-25-2	8260B	ND		0.50	0.010	ug/L	1
Bromomethane (Methyl bromide)	74-83-9	8260B	ND		0.50	0.20	ug/L	1
2-Butanone (MEK)	78-93-3	8260B	ND		10	2.0	ug/L	1
Carbon disulfide	75-15-0	8260B	ND		0.50	0.097	ug/L	1
Carbon tetrachloride	56-23-5	8260B	ND		0.50	0.085	ug/L	1
Chlorobenzene	108-90-7	8260B	ND		0.50	0.17	ug/L	1
Chloroethane	75-00-3	8260B	ND		0.50	0.17	ug/L	1
Chloroform	67-66-3	8260B	ND		0.50	0.17	ug/L	1
Chloromethane (Methyl chloride)	74-87-3	8260B	ND		0.50	0.17	ug/L	1
Cyclohexane	110-82-7	8260B	ND		0.50	0.30	ug/L	1
1,2-Dibromo-3-chloropropane (DBCP)	96-12-8	8260B	ND		0.50	0.069	ug/L	1
Dibromochloromethane	124-48-1	8260B	ND		0.50	0.17	ug/L	1
1,2-Dibromoethane (EDB)	106-93-4	8260B	ND		0.50	0.061	ug/L	1
1,3-Dichlorobenzene	541-73-1	8260B	ND		0.50	0.17	ug/L	1
1,2-Dichlorobenzene	95-50-1	8260B	ND		0.50	0.17	ug/L	1
1,4-Dichlorobenzene	106-46-7	8260B	ND		0.50	0.17	ug/L	1
Dichlorodifluoromethane	75-71-8	8260B	ND		0.50	0.071	ug/L	1
1,1-Dichloroethane	75-34-3	8260B	ND		0.50	0.054	ug/L	1
1,2-Dichloroethane	107-06-2	8260B	ND		0.50	0.023	ug/L	1
trans-1,2-Dichloroethene	156-60-5	8260B	ND		0.50	0.079	ug/L	1
1,1-Dichloroethene	75-35-4	8260B	ND		0.50	0.094	ug/L	1
cis-1,2-Dichloroethene	156-59-2	8260B	0.18	J	0.50	0.087	ug/L	1
1,2-Dichloropropane	78-87-5	8260B	ND		0.50	0.081	ug/L	1
trans-1,3-Dichloropropene	10061-02-6	8260B	ND		0.50	0.18	ug/L	1
cis-1,3-Dichloropropene	10061-01-5	8260B	ND		0.50	0.090	ug/L	1
Ethylbenzene	100-41-4	8260B	ND		0.50	0.17	ug/L	1
2-Hexanone	591-78-6	8260B	ND		10	0.27	ug/L	1
Isopropylbenzene	98-82-8	8260B	ND		0.50	0.029	ug/L	1
Methyl acetate	79-20-9	8260B	ND		1.0	0.30	ug/L	1
Methyl tertiary butyl ether (MTBE)	1634-04-4	8260B	ND		0.50	0.019	ug/L	1
4-Methyl-2-pentanone	108-10-1	8260B	ND		10	0.31	ug/L	1
Methylcyclohexane	108-87-2	8260B	ND		5.0	0.95	ug/L	1
Methylene chloride	75-09-2	8260B	ND		0.50	0.17	ug/L	1
Styrene	100-42-5	8260B	ND		0.50	0.015	ug/L	1
1,1,2,2-Tetrachloroethane	79-34-5	8260B	ND		0.50	0.013	ug/L	1
Tetrachloroethene	127-18-4	8260B	0.40	J	0.50	0.014	ug/L	1
Toluene	108-88-3	8260B	ND		0.50	0.17	ug/L	1
1,1,2-Trichloro-1,2,2-Trifluoroethane	76-13-1	8260B	ND		0.50	0.30	ug/L	1
1,2,4-Trichlorobenzene	120-82-1	8260B	ND		0.50	0.17	ug/L	1
1,1,1-Trichloroethane	71-55-6	8260B	ND		0.50	0.029	ug/L	1
1,1,2-Trichloroethane	79-00-5	8260B	ND		0.50	0.031	ug/L	1

PQL = Practical quantitation limit
B = Detected in the method blank
E = Quantitation of compound exceeded the calibration range
ND = Not detected at or above the MDL
J = Estimated result < PQL and ≥ MDL
P = The RPD between two GC columns exceeds 40%
Where applicable, all soil sample analysis are reported on a dry weight basis unless flagged with a "W"
N = Recovery is out of criteria
H = Out of holding time

Volatile Organic Compounds by GC/MS

Client: ARCADIS U.S., Inc.
Laboratory ID: LC13017-009
Description: DUP-5 (031110)
Matrix: Aqueous
Date Sampled: 03/11/2010 0700
Date Received: 03/13/2010

Run	Prep Method	Analytical Method	Dilution	Analysis Date	Analyst	Prep Date	Batch
1	5030B	8260B	1	03/16/2010 0148	DLB		29458

Parameter	CAS Number	Analytical Method	Result	Q	PQL	MDL	Units	Run
Trichloroethene	79-01-6	8260B	2.0		0.50	0.024	ug/L	1
Trichlorofluoromethane	75-69-4	8260B	ND		0.50	0.051	ug/L	1
Vinyl chloride	75-01-4	8260B	ND		0.50	0.065	ug/L	1
Xylenes (total)	1330-20-7	8260B	ND		0.50	0.17	ug/L	1

Surrogate	Q	Run 1 % Recovery	Acceptance Limits
1,2-Dichloroethane-d4		101	70-130
Bromofluorobenzene		95	70-130
Toluene-d8		100	70-130

PQL = Practical quantitation limit
B = Detected in the method blank
E = Quantitation of compound exceeded the calibration range
ND = Not detected at or above the MDL
J = Estimated result < PQL and ≥ MDL
P = The RPD between two GC columns exceeds 40%
Where applicable, all soil sample analysis are reported on a dry weight basis unless flagged with a "W"
N = Recovery is out of criteria
H = Out of holding time

Volatile Organic Compounds by GC/MS

Client: ARCADIS U.S., Inc.
Laboratory ID: LC13017-010
Description: G4MW027 (031110)
Matrix: Aqueous
Date Sampled: 03/11/2010 0859
Date Received: 03/13/2010

Run	Prep Method	Analytical Method	Dilution	Analysis Date	Analyst	Prep Date	Batch
1	5030B	8260B	1	03/16/2010 0210	DLB		29458

Parameter	CAS Number	Analytical Method	Result	Q	PQL	MDL	Units	Run
Acetone	67-64-1	8260B	1.8	J	10	0.061	ug/L	1
Benzene	71-43-2	8260B	ND		0.50	0.027	ug/L	1
Bromodichloromethane	75-27-4	8260B	ND		0.50	0.17	ug/L	1
Bromoform	75-25-2	8260B	ND		0.50	0.010	ug/L	1
Bromomethane (Methyl bromide)	74-83-9	8260B	ND		0.50	0.20	ug/L	1
2-Butanone (MEK)	78-93-3	8260B	ND		10	2.0	ug/L	1
Carbon disulfide	75-15-0	8260B	ND		0.50	0.097	ug/L	1
Carbon tetrachloride	56-23-5	8260B	ND		0.50	0.085	ug/L	1
Chlorobenzene	108-90-7	8260B	ND		0.50	0.17	ug/L	1
Chloroethane	75-00-3	8260B	ND		0.50	0.17	ug/L	1
Chloroform	67-66-3	8260B	ND		0.50	0.17	ug/L	1
Chloromethane (Methyl chloride)	74-87-3	8260B	ND		0.50	0.17	ug/L	1
Cyclohexane	110-82-7	8260B	ND		0.50	0.30	ug/L	1
1,2-Dibromo-3-chloropropane (DBCP)	96-12-8	8260B	ND		0.50	0.069	ug/L	1
Dibromochloromethane	124-48-1	8260B	ND		0.50	0.17	ug/L	1
1,2-Dibromoethane (EDB)	106-93-4	8260B	ND		0.50	0.061	ug/L	1
1,3-Dichlorobenzene	541-73-1	8260B	ND		0.50	0.17	ug/L	1
1,2-Dichlorobenzene	95-50-1	8260B	ND		0.50	0.17	ug/L	1
1,4-Dichlorobenzene	106-46-7	8260B	ND		0.50	0.17	ug/L	1
Dichlorodifluoromethane	75-71-8	8260B	ND		0.50	0.071	ug/L	1
1,1-Dichloroethane	75-34-3	8260B	ND		0.50	0.054	ug/L	1
1,2-Dichloroethane	107-06-2	8260B	ND		0.50	0.023	ug/L	1
trans-1,2-Dichloroethene	156-60-5	8260B	ND		0.50	0.079	ug/L	1
1,1-Dichloroethene	75-35-4	8260B	ND		0.50	0.094	ug/L	1
cis-1,2-Dichloroethene	156-59-2	8260B	0.16	J	0.50	0.087	ug/L	1
1,2-Dichloropropane	78-87-5	8260B	ND		0.50	0.081	ug/L	1
trans-1,3-Dichloropropene	10061-02-6	8260B	ND		0.50	0.18	ug/L	1
cis-1,3-Dichloropropene	10061-01-5	8260B	ND		0.50	0.090	ug/L	1
Ethylbenzene	100-41-4	8260B	ND		0.50	0.17	ug/L	1
2-Hexanone	591-78-6	8260B	ND		10	0.27	ug/L	1
Isopropylbenzene	98-82-8	8260B	ND		0.50	0.029	ug/L	1
Methyl acetate	79-20-9	8260B	ND		1.0	0.30	ug/L	1
Methyl tertiary butyl ether (MTBE)	1634-04-4	8260B	ND		0.50	0.019	ug/L	1
4-Methyl-2-pentanone	108-10-1	8260B	ND		10	0.31	ug/L	1
Methylcyclohexane	108-87-2	8260B	ND		5.0	0.95	ug/L	1
Methylene chloride	75-09-2	8260B	ND		0.50	0.17	ug/L	1
Styrene	100-42-5	8260B	ND		0.50	0.015	ug/L	1
1,1,2,2-Tetrachloroethane	79-34-5	8260B	ND		0.50	0.013	ug/L	1
Tetrachloroethene	127-18-4	8260B	0.38	J	0.50	0.014	ug/L	1
Toluene	108-88-3	8260B	ND		0.50	0.17	ug/L	1
1,1,2-Trichloro-1,2,2-Trifluoroethane	76-13-1	8260B	ND		0.50	0.30	ug/L	1
1,2,4-Trichlorobenzene	120-82-1	8260B	ND		0.50	0.17	ug/L	1
1,1,1-Trichloroethane	71-55-6	8260B	ND		0.50	0.029	ug/L	1
1,1,2-Trichloroethane	79-00-5	8260B	ND		0.50	0.031	ug/L	1

PQL = Practical quantitation limit
B = Detected in the method blank
E = Quantitation of compound exceeded the calibration range
ND = Not detected at or above the MDL
J = Estimated result < PQL and ≥ MDL
P = The RPD between two GC columns exceeds 40%
Where applicable, all soil sample analysis are reported on a dry weight basis unless flagged with a "W"
N = Recovery is out of criteria
H = Out of holding time

Volatile Organic Compounds by GC/MS

Client: ARCADIS U.S., Inc.
Laboratory ID: LC13017-010
Description: G4MW027 (031110)
Matrix: Aqueous
Date Sampled: 03/11/2010 0859
Date Received: 03/13/2010

Run	Prep Method	Analytical Method	Dilution	Analysis Date	Analyst	Prep Date	Batch
1	5030B	8260B	1	03/16/2010 0210	DLB		29458

Parameter	CAS Number	Analytical Method	Result	Q	PQL	MDL	Units	Run
Trichloroethene	79-01-6	8260B	1.9		0.50	0.024	ug/L	1
Trichlorofluoromethane	75-69-4	8260B	ND		0.50	0.051	ug/L	1
Vinyl chloride	75-01-4	8260B	ND		0.50	0.065	ug/L	1
Xylenes (total)	1330-20-7	8260B	ND		0.50	0.17	ug/L	1

Surrogate	Q	Run 1 % Recovery	Acceptance Limits
1,2-Dichloroethane-d4		101	70-130
Bromofluorobenzene		95	70-130
Toluene-d8		100	70-130

PQL = Practical quantitation limit
B = Detected in the method blank
E = Quantitation of compound exceeded the calibration range
ND = Not detected at or above the MDL
J = Estimated result < PQL and ≥ MDL
P = The RPD between two GC columns exceeds 40%
Where applicable, all soil sample analysis are reported on a dry weight basis unless flagged with a "W"
N = Recovery is out of criteria
H = Out of holding time

Volatile Organic Compounds by GC/MS

Client: ARCADIS U.S., Inc.
Laboratory ID: LC13017-011
Description: G4MW028 (031110)
Matrix: Aqueous
Date Sampled: 03/11/2010 1033
Date Received: 03/13/2010

Run	Prep Method	Analytical Method	Dilution	Analysis Date	Analyst	Prep Date	Batch
1	5030B	8260B	1	03/16/2010 0232	DLB		29458

Parameter	CAS Number	Analytical Method	Result	Q	PQL	MDL	Units	Run
Acetone	67-64-1	8260B	1.8	J	10	0.061	ug/L	1
Benzene	71-43-2	8260B	ND		0.50	0.027	ug/L	1
Bromodichloromethane	75-27-4	8260B	ND		0.50	0.17	ug/L	1
Bromoform	75-25-2	8260B	ND		0.50	0.010	ug/L	1
Bromomethane (Methyl bromide)	74-83-9	8260B	ND		0.50	0.20	ug/L	1
2-Butanone (MEK)	78-93-3	8260B	ND		10	2.0	ug/L	1
Carbon disulfide	75-15-0	8260B	ND		0.50	0.097	ug/L	1
Carbon tetrachloride	56-23-5	8260B	ND		0.50	0.085	ug/L	1
Chlorobenzene	108-90-7	8260B	ND		0.50	0.17	ug/L	1
Chloroethane	75-00-3	8260B	ND		0.50	0.17	ug/L	1
Chloroform	67-66-3	8260B	ND		0.50	0.17	ug/L	1
Chloromethane (Methyl chloride)	74-87-3	8260B	ND		0.50	0.17	ug/L	1
Cyclohexane	110-82-7	8260B	ND		0.50	0.30	ug/L	1
1,2-Dibromo-3-chloropropane (DBCP)	96-12-8	8260B	ND		0.50	0.069	ug/L	1
Dibromochloromethane	124-48-1	8260B	ND		0.50	0.17	ug/L	1
1,2-Dibromoethane (EDB)	106-93-4	8260B	ND		0.50	0.061	ug/L	1
1,3-Dichlorobenzene	541-73-1	8260B	ND		0.50	0.17	ug/L	1
1,2-Dichlorobenzene	95-50-1	8260B	ND		0.50	0.17	ug/L	1
1,4-Dichlorobenzene	106-46-7	8260B	ND		0.50	0.17	ug/L	1
Dichlorodifluoromethane	75-71-8	8260B	ND		0.50	0.071	ug/L	1
1,1-Dichloroethane	75-34-3	8260B	ND		0.50	0.054	ug/L	1
1,2-Dichloroethane	107-06-2	8260B	ND		0.50	0.023	ug/L	1
trans-1,2-Dichloroethene	156-60-5	8260B	ND		0.50	0.079	ug/L	1
1,1-Dichloroethene	75-35-4	8260B	ND		0.50	0.094	ug/L	1
cis-1,2-Dichloroethene	156-59-2	8260B	ND		0.50	0.087	ug/L	1
1,2-Dichloropropane	78-87-5	8260B	ND		0.50	0.081	ug/L	1
trans-1,3-Dichloropropene	10061-02-6	8260B	ND		0.50	0.18	ug/L	1
cis-1,3-Dichloropropene	10061-01-5	8260B	ND		0.50	0.090	ug/L	1
Ethylbenzene	100-41-4	8260B	ND		0.50	0.17	ug/L	1
2-Hexanone	591-78-6	8260B	ND		10	0.27	ug/L	1
Isopropylbenzene	98-82-8	8260B	ND		0.50	0.029	ug/L	1
Methyl acetate	79-20-9	8260B	ND		1.0	0.30	ug/L	1
Methyl tertiary butyl ether (MTBE)	1634-04-4	8260B	ND		0.50	0.019	ug/L	1
4-Methyl-2-pentanone	108-10-1	8260B	ND		10	0.31	ug/L	1
Methylcyclohexane	108-87-2	8260B	ND		5.0	0.95	ug/L	1
Methylene chloride	75-09-2	8260B	ND		0.50	0.17	ug/L	1
Styrene	100-42-5	8260B	ND		0.50	0.015	ug/L	1
1,1,2,2-Tetrachloroethane	79-34-5	8260B	ND		0.50	0.013	ug/L	1
Tetrachloroethene	127-18-4	8260B	ND		0.50	0.014	ug/L	1
Toluene	108-88-3	8260B	ND		0.50	0.17	ug/L	1
1,1,2-Trichloro-1,2,2-Trifluoroethane	76-13-1	8260B	ND		0.50	0.30	ug/L	1
1,2,4-Trichlorobenzene	120-82-1	8260B	ND		0.50	0.17	ug/L	1
1,1,1-Trichloroethane	71-55-6	8260B	ND		0.50	0.029	ug/L	1
1,1,2-Trichloroethane	79-00-5	8260B	ND		0.50	0.031	ug/L	1

PQL = Practical quantitation limit
B = Detected in the method blank
E = Quantitation of compound exceeded the calibration range
ND = Not detected at or above the MDL
J = Estimated result < PQL and ≥ MDL
P = The RPD between two GC columns exceeds 40%
Where applicable, all soil sample analysis are reported on a dry weight basis unless flagged with a "W"
N = Recovery is out of criteria
H = Out of holding time

Volatile Organic Compounds by GC/MS

Client: ARCADIS U.S., Inc.
Laboratory ID: LC13017-011
Description: G4MW028 (031110)
Matrix: Aqueous
Date Sampled: 03/11/2010 1033
Date Received: 03/13/2010

Run	Prep Method	Analytical Method	Dilution	Analysis Date	Analyst	Prep Date	Batch
1	5030B	8260B	1	03/16/2010 0232	DLB		29458

Parameter	CAS Number	Analytical Method	Result	Q	PQL	MDL	Units	Run
Trichloroethene	79-01-6	8260B	ND		0.50	0.024	ug/L	1
Trichlorofluoromethane	75-69-4	8260B	ND		0.50	0.051	ug/L	1
Vinyl chloride	75-01-4	8260B	ND		0.50	0.065	ug/L	1
Xylenes (total)	1330-20-7	8260B	ND		0.50	0.17	ug/L	1

Surrogate	Q	Run 1 % Recovery	Acceptance Limits
1,2-Dichloroethane-d4		102	70-130
Bromofluorobenzene		95	70-130
Toluene-d8		99	70-130

PQL = Practical quantitation limit
B = Detected in the method blank
E = Quantitation of compound exceeded the calibration range
ND = Not detected at or above the MDL
J = Estimated result < PQL and ≥ MDL
P = The RPD between two GC columns exceeds 40%
Where applicable, all soil sample analysis are reported on a dry weight basis unless flagged with a "W"
N = Recovery is out of criteria
H = Out of holding time

Volatile Organic Compounds by GC/MS

Client: ARCADIS U.S., Inc.
Laboratory ID: LC13017-012
Description: G4MW029 (031110)
Matrix: Aqueous
Date Sampled: 03/11/2010 1124
Date Received: 03/13/2010

Run	Prep Method	Analytical Method	Dilution	Analysis Date	Analyst	Prep Date	Batch
1	5030B	8260B	1	03/16/2010 0253	DLB		29458

Parameter	CAS Number	Analytical Method	Result	Q	PQL	MDL	Units	Run
Acetone	67-64-1	8260B	1.1	J	10	0.061	ug/L	1
Benzene	71-43-2	8260B	ND		0.50	0.027	ug/L	1
Bromodichloromethane	75-27-4	8260B	ND		0.50	0.17	ug/L	1
Bromoform	75-25-2	8260B	ND		0.50	0.010	ug/L	1
Bromomethane (Methyl bromide)	74-83-9	8260B	ND		0.50	0.20	ug/L	1
2-Butanone (MEK)	78-93-3	8260B	ND		10	2.0	ug/L	1
Carbon disulfide	75-15-0	8260B	ND		0.50	0.097	ug/L	1
Carbon tetrachloride	56-23-5	8260B	ND		0.50	0.085	ug/L	1
Chlorobenzene	108-90-7	8260B	ND		0.50	0.17	ug/L	1
Chloroethane	75-00-3	8260B	ND		0.50	0.17	ug/L	1
Chloroform	67-66-3	8260B	ND		0.50	0.17	ug/L	1
Chloromethane (Methyl chloride)	74-87-3	8260B	ND		0.50	0.17	ug/L	1
Cyclohexane	110-82-7	8260B	ND		0.50	0.30	ug/L	1
1,2-Dibromo-3-chloropropane (DBCP)	96-12-8	8260B	ND		0.50	0.069	ug/L	1
Dibromochloromethane	124-48-1	8260B	ND		0.50	0.17	ug/L	1
1,2-Dibromoethane (EDB)	106-93-4	8260B	ND		0.50	0.061	ug/L	1
1,3-Dichlorobenzene	541-73-1	8260B	ND		0.50	0.17	ug/L	1
1,2-Dichlorobenzene	95-50-1	8260B	ND		0.50	0.17	ug/L	1
1,4-Dichlorobenzene	106-46-7	8260B	ND		0.50	0.17	ug/L	1
Dichlorodifluoromethane	75-71-8	8260B	ND		0.50	0.071	ug/L	1
1,1-Dichloroethane	75-34-3	8260B	ND		0.50	0.054	ug/L	1
1,2-Dichloroethane	107-06-2	8260B	ND		0.50	0.023	ug/L	1
trans-1,2-Dichloroethene	156-60-5	8260B	ND		0.50	0.079	ug/L	1
1,1-Dichloroethene	75-35-4	8260B	ND		0.50	0.094	ug/L	1
cis-1,2-Dichloroethene	156-59-2	8260B	ND		0.50	0.087	ug/L	1
1,2-Dichloropropane	78-87-5	8260B	ND		0.50	0.081	ug/L	1
trans-1,3-Dichloropropene	10061-02-6	8260B	ND		0.50	0.18	ug/L	1
cis-1,3-Dichloropropene	10061-01-5	8260B	ND		0.50	0.090	ug/L	1
Ethylbenzene	100-41-4	8260B	ND		0.50	0.17	ug/L	1
2-Hexanone	591-78-6	8260B	ND		10	0.27	ug/L	1
Isopropylbenzene	98-82-8	8260B	ND		0.50	0.029	ug/L	1
Methyl acetate	79-20-9	8260B	ND		1.0	0.30	ug/L	1
Methyl tertiary butyl ether (MTBE)	1634-04-4	8260B	ND		0.50	0.019	ug/L	1
4-Methyl-2-pentanone	108-10-1	8260B	ND		10	0.31	ug/L	1
Methylcyclohexane	108-87-2	8260B	ND		5.0	0.95	ug/L	1
Methylene chloride	75-09-2	8260B	ND		0.50	0.17	ug/L	1
Styrene	100-42-5	8260B	ND		0.50	0.015	ug/L	1
1,1,2,2-Tetrachloroethane	79-34-5	8260B	ND		0.50	0.013	ug/L	1
Tetrachloroethene	127-18-4	8260B	ND		0.50	0.014	ug/L	1
Toluene	108-88-3	8260B	ND		0.50	0.17	ug/L	1
1,1,2-Trichloro-1,2,2-Trifluoroethane	76-13-1	8260B	ND		0.50	0.30	ug/L	1
1,2,4-Trichlorobenzene	120-82-1	8260B	ND		0.50	0.17	ug/L	1
1,1,1-Trichloroethane	71-55-6	8260B	ND		0.50	0.029	ug/L	1
1,1,2-Trichloroethane	79-00-5	8260B	ND		0.50	0.031	ug/L	1

PQL = Practical quantitation limit
B = Detected in the method blank
E = Quantitation of compound exceeded the calibration range
ND = Not detected at or above the MDL
J = Estimated result < PQL and ≥ MDL
P = The RPD between two GC columns exceeds 40%
Where applicable, all soil sample analysis are reported on a dry weight basis unless flagged with a "W"
N = Recovery is out of criteria
H = Out of holding time

Volatile Organic Compounds by GC/MS

Client: ARCADIS U.S., Inc.
Laboratory ID: LC13017-012
Description: G4MW029 (031110)
Matrix: Aqueous
Date Sampled: 03/11/2010 1124
Date Received: 03/13/2010

Run	Prep Method	Analytical Method	Dilution	Analysis Date	Analyst	Prep Date	Batch
1	5030B	8260B	1	03/16/2010 0253	DLB		29458

Parameter	CAS Number	Analytical Method	Result	Q	PQL	MDL	Units	Run
Trichloroethene	79-01-6	8260B	ND		0.50	0.024	ug/L	1
Trichlorofluoromethane	75-69-4	8260B	ND		0.50	0.051	ug/L	1
Vinyl chloride	75-01-4	8260B	ND		0.50	0.065	ug/L	1
Xylenes (total)	1330-20-7	8260B	ND		0.50	0.17	ug/L	1

Surrogate	Q	Run 1 % Recovery	Acceptance Limits
1,2-Dichloroethane-d4		102	70-130
Bromofluorobenzene		96	70-130
Toluene-d8		99	70-130

PQL = Practical quantitation limit
B = Detected in the method blank
E = Quantitation of compound exceeded the calibration range
ND = Not detected at or above the MDL
J = Estimated result < PQL and ≥ MDL
P = The RPD between two GC columns exceeds 40%
Where applicable, all soil sample analysis are reported on a dry weight basis unless flagged with a "W"
N = Recovery is out of criteria
H = Out of holding time

Volatile Organic Compounds by GC/MS

Client: ARCADIS U.S., Inc.
Laboratory ID: LC13017-013
Description: G4MW011 (031110)
Matrix: Aqueous
Date Sampled: 03/11/2010 1515
Date Received: 03/13/2010

Run	Prep Method	Analytical Method	Dilution	Analysis Date	Analyst	Prep Date	Batch
1	5030B	8260B	1	03/16/2010 0315	DLB		29458

Parameter	CAS Number	Analytical Method	Result	Q	PQL	MDL	Units	Run
Acetone	67-64-1	8260B	1.3	J	10	0.061	ug/L	1
Benzene	71-43-2	8260B	ND		0.50	0.027	ug/L	1
Bromodichloromethane	75-27-4	8260B	ND		0.50	0.17	ug/L	1
Bromoform	75-25-2	8260B	ND		0.50	0.010	ug/L	1
Bromomethane (Methyl bromide)	74-83-9	8260B	ND		0.50	0.20	ug/L	1
2-Butanone (MEK)	78-93-3	8260B	ND		10	2.0	ug/L	1
Carbon disulfide	75-15-0	8260B	ND		0.50	0.097	ug/L	1
Carbon tetrachloride	56-23-5	8260B	ND		0.50	0.085	ug/L	1
Chlorobenzene	108-90-7	8260B	ND		0.50	0.17	ug/L	1
Chloroethane	75-00-3	8260B	ND		0.50	0.17	ug/L	1
Chloroform	67-66-3	8260B	ND		0.50	0.17	ug/L	1
Chloromethane (Methyl chloride)	74-87-3	8260B	ND		0.50	0.17	ug/L	1
Cyclohexane	110-82-7	8260B	ND		0.50	0.30	ug/L	1
1,2-Dibromo-3-chloropropane (DBCP)	96-12-8	8260B	ND		0.50	0.069	ug/L	1
Dibromochloromethane	124-48-1	8260B	ND		0.50	0.17	ug/L	1
1,2-Dibromoethane (EDB)	106-93-4	8260B	ND		0.50	0.061	ug/L	1
1,3-Dichlorobenzene	541-73-1	8260B	ND		0.50	0.17	ug/L	1
1,2-Dichlorobenzene	95-50-1	8260B	ND		0.50	0.17	ug/L	1
1,4-Dichlorobenzene	106-46-7	8260B	ND		0.50	0.17	ug/L	1
Dichlorodifluoromethane	75-71-8	8260B	ND		0.50	0.071	ug/L	1
1,1-Dichloroethane	75-34-3	8260B	0.17	J	0.50	0.054	ug/L	1
1,2-Dichloroethane	107-06-2	8260B	ND		0.50	0.023	ug/L	1
trans-1,2-Dichloroethene	156-60-5	8260B	3.1		0.50	0.079	ug/L	1
1,1-Dichloroethene	75-35-4	8260B	0.42	J	0.50	0.094	ug/L	1
cis-1,2-Dichloroethene	156-59-2	8260B	11		0.50	0.087	ug/L	1
1,2-Dichloropropane	78-87-5	8260B	ND		0.50	0.081	ug/L	1
trans-1,3-Dichloropropene	10061-02-6	8260B	ND		0.50	0.18	ug/L	1
cis-1,3-Dichloropropene	10061-01-5	8260B	ND		0.50	0.090	ug/L	1
Ethylbenzene	100-41-4	8260B	ND		0.50	0.17	ug/L	1
2-Hexanone	591-78-6	8260B	ND		10	0.27	ug/L	1
Isopropylbenzene	98-82-8	8260B	ND		0.50	0.029	ug/L	1
Methyl acetate	79-20-9	8260B	ND		1.0	0.30	ug/L	1
Methyl tertiary butyl ether (MTBE)	1634-04-4	8260B	ND		0.50	0.019	ug/L	1
4-Methyl-2-pentanone	108-10-1	8260B	ND		10	0.31	ug/L	1
Methylcyclohexane	108-87-2	8260B	ND		5.0	0.95	ug/L	1
Methylene chloride	75-09-2	8260B	ND		0.50	0.17	ug/L	1
Styrene	100-42-5	8260B	ND		0.50	0.015	ug/L	1
1,1,2,2-Tetrachloroethane	79-34-5	8260B	ND		0.50	0.013	ug/L	1
Tetrachloroethene	127-18-4	8260B	ND		0.50	0.014	ug/L	1
Toluene	108-88-3	8260B	ND		0.50	0.17	ug/L	1
1,1,2-Trichloro-1,2,2-Trifluoroethane	76-13-1	8260B	ND		0.50	0.30	ug/L	1
1,2,4-Trichlorobenzene	120-82-1	8260B	ND		0.50	0.17	ug/L	1
1,1,1-Trichloroethane	71-55-6	8260B	ND		0.50	0.029	ug/L	1
1,1,2-Trichloroethane	79-00-5	8260B	ND		0.50	0.031	ug/L	1

PQL = Practical quantitation limit
B = Detected in the method blank
E = Quantitation of compound exceeded the calibration range
ND = Not detected at or above the MDL
J = Estimated result < PQL and ≥ MDL
P = The RPD between two GC columns exceeds 40%
Where applicable, all soil sample analysis are reported on a dry weight basis unless flagged with a "W"
N = Recovery is out of criteria
H = Out of holding time

Volatile Organic Compounds by GC/MS

Client: ARCADIS U.S., Inc.
Laboratory ID: LC13017-013
Description: G4MW011 (031110)
Matrix: Aqueous
Date Sampled: 03/11/2010 1515
Date Received: 03/13/2010

Run	Prep Method	Analytical Method	Dilution	Analysis Date	Analyst	Prep Date	Batch
1	5030B	8260B	1	03/16/2010 0315	DLB		29458

Parameter	CAS Number	Analytical Method	Result	Q	PQL	MDL	Units	Run
Trichloroethene	79-01-6	8260B	5.0		0.50	0.024	ug/L	1
Trichlorofluoromethane	75-69-4	8260B	ND		0.50	0.051	ug/L	1
Vinyl chloride	75-01-4	8260B	ND		0.50	0.065	ug/L	1
Xylenes (total)	1330-20-7	8260B	ND		0.50	0.17	ug/L	1

Surrogate	Q	Run 1 % Recovery	Acceptance Limits
1,2-Dichloroethane-d4		100	70-130
Bromofluorobenzene		94	70-130
Toluene-d8		99	70-130

PQL = Practical quantitation limit
B = Detected in the method blank
E = Quantitation of compound exceeded the calibration range
ND = Not detected at or above the MDL
J = Estimated result < PQL and ≥ MDL
P = The RPD between two GC columns exceeds 40%
Where applicable, all soil sample analysis are reported on a dry weight basis unless flagged with a "W"
N = Recovery is out of criteria
H = Out of holding time

Volatile Organic Compounds by GC/MS

Client: ARCADIS U.S., Inc.
Description: G4MW006 (031210)
Date Sampled: 03/12/2010 0815
Date Received: 03/13/2010

Laboratory ID: LC13017-014
Matrix: Aqueous

Run	Prep Method	Analytical Method	Dilution	Analysis Date	Analyst	Prep Date	Batch
1	5030B	8260B	1	03/16/2010 0337	DLB		29458

Parameter	CAS Number	Analytical Method	Result	Q	PQL	MDL	Units	Run
Acetone	67-64-1	8260B	1.2	J	10	0.061	ug/L	1
Benzene	71-43-2	8260B	ND		0.50	0.027	ug/L	1
Bromodichloromethane	75-27-4	8260B	ND		0.50	0.17	ug/L	1
Bromoform	75-25-2	8260B	ND		0.50	0.010	ug/L	1
Bromomethane (Methyl bromide)	74-83-9	8260B	ND		0.50	0.20	ug/L	1
2-Butanone (MEK)	78-93-3	8260B	ND		10	2.0	ug/L	1
Carbon disulfide	75-15-0	8260B	ND		0.50	0.097	ug/L	1
Carbon tetrachloride	56-23-5	8260B	ND		0.50	0.085	ug/L	1
Chlorobenzene	108-90-7	8260B	ND		0.50	0.17	ug/L	1
Chloroethane	75-00-3	8260B	ND		0.50	0.17	ug/L	1
Chloroform	67-66-3	8260B	ND		0.50	0.17	ug/L	1
Chloromethane (Methyl chloride)	74-87-3	8260B	ND		0.50	0.17	ug/L	1
Cyclohexane	110-82-7	8260B	ND		0.50	0.30	ug/L	1
1,2-Dibromo-3-chloropropane (DBCP)	96-12-8	8260B	ND		0.50	0.069	ug/L	1
Dibromochloromethane	124-48-1	8260B	ND		0.50	0.17	ug/L	1
1,2-Dibromoethane (EDB)	106-93-4	8260B	ND		0.50	0.061	ug/L	1
1,3-Dichlorobenzene	541-73-1	8260B	ND		0.50	0.17	ug/L	1
1,2-Dichlorobenzene	95-50-1	8260B	ND		0.50	0.17	ug/L	1
1,4-Dichlorobenzene	106-46-7	8260B	ND		0.50	0.17	ug/L	1
Dichlorodifluoromethane	75-71-8	8260B	ND		0.50	0.071	ug/L	1
1,1-Dichloroethane	75-34-3	8260B	0.18	J	0.50	0.054	ug/L	1
1,2-Dichloroethane	107-06-2	8260B	ND		0.50	0.023	ug/L	1
trans-1,2-Dichloroethene	156-60-5	8260B	3.7		0.50	0.079	ug/L	1
1,1-Dichloroethene	75-35-4	8260B	0.48	J	0.50	0.094	ug/L	1
cis-1,2-Dichloroethene	156-59-2	8260B	14		0.50	0.087	ug/L	1
1,2-Dichloropropane	78-87-5	8260B	ND		0.50	0.081	ug/L	1
trans-1,3-Dichloropropene	10061-02-6	8260B	ND		0.50	0.18	ug/L	1
cis-1,3-Dichloropropene	10061-01-5	8260B	ND		0.50	0.090	ug/L	1
Ethylbenzene	100-41-4	8260B	ND		0.50	0.17	ug/L	1
2-Hexanone	591-78-6	8260B	ND		10	0.27	ug/L	1
Isopropylbenzene	98-82-8	8260B	ND		0.50	0.029	ug/L	1
Methyl acetate	79-20-9	8260B	ND		1.0	0.30	ug/L	1
Methyl tertiary butyl ether (MTBE)	1634-04-4	8260B	ND		0.50	0.019	ug/L	1
4-Methyl-2-pentanone	108-10-1	8260B	ND		10	0.31	ug/L	1
Methylcyclohexane	108-87-2	8260B	ND		5.0	0.95	ug/L	1
Methylene chloride	75-09-2	8260B	ND		0.50	0.17	ug/L	1
Styrene	100-42-5	8260B	ND		0.50	0.015	ug/L	1
1,1,2,2-Tetrachloroethane	79-34-5	8260B	ND		0.50	0.013	ug/L	1
Tetrachloroethene	127-18-4	8260B	ND		0.50	0.014	ug/L	1
Toluene	108-88-3	8260B	ND		0.50	0.17	ug/L	1
1,1,2-Trichloro-1,2,2-Trifluoroethane	76-13-1	8260B	ND		0.50	0.30	ug/L	1
1,2,4-Trichlorobenzene	120-82-1	8260B	ND		0.50	0.17	ug/L	1
1,1,1-Trichloroethane	71-55-6	8260B	ND		0.50	0.029	ug/L	1
1,1,2-Trichloroethane	79-00-5	8260B	ND		0.50	0.031	ug/L	1

PQL = Practical quantitation limit
ND = Not detected at or above the MDL
Where applicable, all soil sample analysis are reported on a dry weight basis unless flagged with a "W"
B = Detected in the method blank
J = Estimated result < PQL and ≥ MDL
E = Quantitation of compound exceeded the calibration range
P = The RPD between two GC columns exceeds 40%
N = Recovery is out of criteria
H = Out of holding time

Volatile Organic Compounds by GC/MS

Client: ARCADIS U.S., Inc.
Laboratory ID: LC13017-014
Description: G4MW006 (031210)
Matrix: Aqueous
Date Sampled: 03/12/2010 0815
Date Received: 03/13/2010

Run	Prep Method	Analytical Method	Dilution	Analysis Date	Analyst	Prep Date	Batch
1	5030B	8260B	1	03/16/2010 0337	DLB		29458

Parameter	CAS Number	Analytical Method	Result	Q	PQL	MDL	Units	Run
Trichloroethene	79-01-6	8260B	6.0		0.50	0.024	ug/L	1
Trichlorofluoromethane	75-69-4	8260B	ND		0.50	0.051	ug/L	1
Vinyl chloride	75-01-4	8260B	ND		0.50	0.065	ug/L	1
Xylenes (total)	1330-20-7	8260B	ND		0.50	0.17	ug/L	1

Surrogate	Q	Run 1 % Recovery	Acceptance Limits
1,2-Dichloroethane-d4		102	70-130
Bromofluorobenzene		96	70-130
Toluene-d8		100	70-130

PQL = Practical quantitation limit
B = Detected in the method blank
E = Quantitation of compound exceeded the calibration range
ND = Not detected at or above the MDL
J = Estimated result < PQL and ≥ MDL
P = The RPD between two GC columns exceeds 40%
Where applicable, all soil sample analysis are reported on a dry weight basis unless flagged with a "W"
N = Recovery is out of criteria
H = Out of holding time

Volatile Organic Compounds by GC/MS

Client: ARCADIS U.S., Inc.
Description: G4MW018 (031210)
Date Sampled: 03/12/2010 0842
Date Received: 03/13/2010

Laboratory ID: LC13017-015
Matrix: Aqueous

Run	Prep Method	Analytical Method	Dilution	Analysis Date	Analyst	Prep Date	Batch
1	5030B	8260B	1	03/16/2010 0358	DLB		29458

Parameter	CAS Number	Analytical Method	Result	Q	PQL	MDL	Units	Run
Acetone	67-64-1	8260B	1.4	J	10	0.061	ug/L	1
Benzene	71-43-2	8260B	0.10	J	0.50	0.027	ug/L	1
Bromodichloromethane	75-27-4	8260B	ND		0.50	0.17	ug/L	1
Bromoform	75-25-2	8260B	ND		0.50	0.010	ug/L	1
Bromomethane (Methyl bromide)	74-83-9	8260B	ND		0.50	0.20	ug/L	1
2-Butanone (MEK)	78-93-3	8260B	ND		10	2.0	ug/L	1
Carbon disulfide	75-15-0	8260B	ND		0.50	0.097	ug/L	1
Carbon tetrachloride	56-23-5	8260B	ND		0.50	0.085	ug/L	1
Chlorobenzene	108-90-7	8260B	ND		0.50	0.17	ug/L	1
Chloroethane	75-00-3	8260B	ND		0.50	0.17	ug/L	1
Chloroform	67-66-3	8260B	ND		0.50	0.17	ug/L	1
Chloromethane (Methyl chloride)	74-87-3	8260B	ND		0.50	0.17	ug/L	1
Cyclohexane	110-82-7	8260B	ND		0.50	0.30	ug/L	1
1,2-Dibromo-3-chloropropane (DBCP)	96-12-8	8260B	ND		0.50	0.069	ug/L	1
Dibromochloromethane	124-48-1	8260B	ND		0.50	0.17	ug/L	1
1,2-Dibromoethane (EDB)	106-93-4	8260B	ND		0.50	0.061	ug/L	1
1,3-Dichlorobenzene	541-73-1	8260B	ND		0.50	0.17	ug/L	1
1,2-Dichlorobenzene	95-50-1	8260B	ND		0.50	0.17	ug/L	1
1,4-Dichlorobenzene	106-46-7	8260B	ND		0.50	0.17	ug/L	1
Dichlorodifluoromethane	75-71-8	8260B	ND		0.50	0.071	ug/L	1
1,1-Dichloroethane	75-34-3	8260B	0.13	J	0.50	0.054	ug/L	1
1,2-Dichloroethane	107-06-2	8260B	ND		0.50	0.023	ug/L	1
trans-1,2-Dichloroethene	156-60-5	8260B	2.4		0.50	0.079	ug/L	1
1,1-Dichloroethene	75-35-4	8260B	0.32	J	0.50	0.094	ug/L	1
cis-1,2-Dichloroethene	156-59-2	8260B	10		0.50	0.087	ug/L	1
1,2-Dichloropropane	78-87-5	8260B	ND		0.50	0.081	ug/L	1
trans-1,3-Dichloropropene	10061-02-6	8260B	ND		0.50	0.18	ug/L	1
cis-1,3-Dichloropropene	10061-01-5	8260B	ND		0.50	0.090	ug/L	1
Ethylbenzene	100-41-4	8260B	ND		0.50	0.17	ug/L	1
2-Hexanone	591-78-6	8260B	ND		10	0.27	ug/L	1
Isopropylbenzene	98-82-8	8260B	ND		0.50	0.029	ug/L	1
Methyl acetate	79-20-9	8260B	ND		1.0	0.30	ug/L	1
Methyl tertiary butyl ether (MTBE)	1634-04-4	8260B	ND		0.50	0.019	ug/L	1
4-Methyl-2-pentanone	108-10-1	8260B	ND		10	0.31	ug/L	1
Methylcyclohexane	108-87-2	8260B	ND		5.0	0.95	ug/L	1
Methylene chloride	75-09-2	8260B	ND		0.50	0.17	ug/L	1
Styrene	100-42-5	8260B	ND		0.50	0.015	ug/L	1
1,1,2,2-Tetrachloroethane	79-34-5	8260B	ND		0.50	0.013	ug/L	1
Tetrachloroethene	127-18-4	8260B	0.11	J	0.50	0.014	ug/L	1
Toluene	108-88-3	8260B	ND		0.50	0.17	ug/L	1
1,1,2-Trichloro-1,2,2-Trifluoroethane	76-13-1	8260B	ND		0.50	0.30	ug/L	1
1,2,4-Trichlorobenzene	120-82-1	8260B	ND		0.50	0.17	ug/L	1
1,1,1-Trichloroethane	71-55-6	8260B	ND		0.50	0.029	ug/L	1
1,1,2-Trichloroethane	79-00-5	8260B	ND		0.50	0.031	ug/L	1

PQL = Practical quantitation limit
ND = Not detected at or above the MDL
Where applicable, all soil sample analysis are reported on a dry weight basis unless flagged with a "W"
B = Detected in the method blank
J = Estimated result < PQL and ≥ MDL
E = Quantitation of compound exceeded the calibration range
P = The RPD between two GC columns exceeds 40%
N = Recovery is out of criteria
H = Out of holding time

Volatile Organic Compounds by GC/MS

Client: ARCADIS U.S., Inc.
Laboratory ID: LC13017-015
Description: G4MW018 (031210)
Matrix: Aqueous
Date Sampled: 03/12/2010 0842
Date Received: 03/13/2010

Run	Prep Method	Analytical Method	Dilution	Analysis Date	Analyst	Prep Date	Batch
1	5030B	8260B	1	03/16/2010 0358	DLB		29458

Parameter	CAS Number	Analytical Method	Result	Q	PQL	MDL	Units	Run
Trichloroethene	79-01-6	8260B	5.3		0.50	0.024	ug/L	1
Trichlorofluoromethane	75-69-4	8260B	ND		0.50	0.051	ug/L	1
Vinyl chloride	75-01-4	8260B	ND		0.50	0.065	ug/L	1
Xylenes (total)	1330-20-7	8260B	ND		0.50	0.17	ug/L	1

Surrogate	Q	Run 1 % Recovery	Acceptance Limits
1,2-Dichloroethane-d4		102	70-130
Bromofluorobenzene		97	70-130
Toluene-d8		100	70-130

PQL = Practical quantitation limit
B = Detected in the method blank
E = Quantitation of compound exceeded the calibration range
ND = Not detected at or above the MDL
J = Estimated result < PQL and ≥ MDL
P = The RPD between two GC columns exceeds 40%
Where applicable, all soil sample analysis are reported on a dry weight basis unless flagged with a "W"
N = Recovery is out of criteria
H = Out of holding time

Volatile Organic Compounds by GC/MS

Client: ARCADIS U.S., Inc.
Laboratory ID: LC13017-016
Description: G4MW010 (031210)
Matrix: Aqueous
Date Sampled: 03/12/2010 0947
Date Received: 03/13/2010

Run	Prep Method	Analytical Method	Dilution	Analysis Date	Analyst	Prep Date	Batch
1	5030B	8260B	1	03/16/2010 0420	DLB		29458

Parameter	CAS Number	Analytical Method	Result	Q	PQL	MDL	Units	Run
Acetone	67-64-1	8260B	2.5	J	10	0.061	ug/L	1
Benzene	71-43-2	8260B	0.12	J	0.50	0.027	ug/L	1
Bromodichloromethane	75-27-4	8260B	ND		0.50	0.17	ug/L	1
Bromoform	75-25-2	8260B	ND		0.50	0.010	ug/L	1
Bromomethane (Methyl bromide)	74-83-9	8260B	ND		0.50	0.20	ug/L	1
2-Butanone (MEK)	78-93-3	8260B	ND		10	2.0	ug/L	1
Carbon disulfide	75-15-0	8260B	ND		0.50	0.097	ug/L	1
Carbon tetrachloride	56-23-5	8260B	ND		0.50	0.085	ug/L	1
Chlorobenzene	108-90-7	8260B	ND		0.50	0.17	ug/L	1
Chloroethane	75-00-3	8260B	ND		0.50	0.17	ug/L	1
Chloroform	67-66-3	8260B	ND		0.50	0.17	ug/L	1
Chloromethane (Methyl chloride)	74-87-3	8260B	ND		0.50	0.17	ug/L	1
Cyclohexane	110-82-7	8260B	ND		0.50	0.30	ug/L	1
1,2-Dibromo-3-chloropropane (DBCP)	96-12-8	8260B	ND		0.50	0.069	ug/L	1
Dibromochloromethane	124-48-1	8260B	ND		0.50	0.17	ug/L	1
1,2-Dibromoethane (EDB)	106-93-4	8260B	ND		0.50	0.061	ug/L	1
1,3-Dichlorobenzene	541-73-1	8260B	ND		0.50	0.17	ug/L	1
1,2-Dichlorobenzene	95-50-1	8260B	ND		0.50	0.17	ug/L	1
1,4-Dichlorobenzene	106-46-7	8260B	ND		0.50	0.17	ug/L	1
Dichlorodifluoromethane	75-71-8	8260B	ND		0.50	0.071	ug/L	1
1,1-Dichloroethane	75-34-3	8260B	ND		0.50	0.054	ug/L	1
1,2-Dichloroethane	107-06-2	8260B	ND		0.50	0.023	ug/L	1
trans-1,2-Dichloroethene	156-60-5	8260B	1.2		0.50	0.079	ug/L	1
1,1-Dichloroethene	75-35-4	8260B	0.14	J	0.50	0.094	ug/L	1
cis-1,2-Dichloroethene	156-59-2	8260B	3.8		0.50	0.087	ug/L	1
1,2-Dichloropropane	78-87-5	8260B	ND		0.50	0.081	ug/L	1
trans-1,3-Dichloropropene	10061-02-6	8260B	ND		0.50	0.18	ug/L	1
cis-1,3-Dichloropropene	10061-01-5	8260B	ND		0.50	0.090	ug/L	1
Ethylbenzene	100-41-4	8260B	ND		0.50	0.17	ug/L	1
2-Hexanone	591-78-6	8260B	ND		10	0.27	ug/L	1
Isopropylbenzene	98-82-8	8260B	ND		0.50	0.029	ug/L	1
Methyl acetate	79-20-9	8260B	ND		1.0	0.30	ug/L	1
Methyl tertiary butyl ether (MTBE)	1634-04-4	8260B	ND		0.50	0.019	ug/L	1
4-Methyl-2-pentanone	108-10-1	8260B	ND		10	0.31	ug/L	1
Methylcyclohexane	108-87-2	8260B	ND		5.0	0.95	ug/L	1
Methylene chloride	75-09-2	8260B	ND		0.50	0.17	ug/L	1
Styrene	100-42-5	8260B	ND		0.50	0.015	ug/L	1
1,1,2,2-Tetrachloroethane	79-34-5	8260B	ND		0.50	0.013	ug/L	1
Tetrachloroethene	127-18-4	8260B	ND		0.50	0.014	ug/L	1
Toluene	108-88-3	8260B	ND		0.50	0.17	ug/L	1
1,1,2-Trichloro-1,2,2-Trifluoroethane	76-13-1	8260B	ND		0.50	0.30	ug/L	1
1,2,4-Trichlorobenzene	120-82-1	8260B	ND		0.50	0.17	ug/L	1
1,1,1-Trichloroethane	71-55-6	8260B	ND		0.50	0.029	ug/L	1
1,1,2-Trichloroethane	79-00-5	8260B	ND		0.50	0.031	ug/L	1

PQL = Practical quantitation limit
B = Detected in the method blank
E = Quantitation of compound exceeded the calibration range
ND = Not detected at or above the MDL
J = Estimated result < PQL and ≥ MDL
P = The RPD between two GC columns exceeds 40%
Where applicable, all soil sample analysis are reported on a dry weight basis unless flagged with a "W"
N = Recovery is out of criteria
H = Out of holding time

Volatile Organic Compounds by GC/MS

Client: ARCADIS U.S., Inc.
Laboratory ID: LC13017-016
Description: G4MW010 (031210)
Matrix: Aqueous
Date Sampled: 03/12/2010 0947
Date Received: 03/13/2010

Run	Prep Method	Analytical Method	Dilution	Analysis Date	Analyst	Prep Date	Batch
1	5030B	8260B	1	03/16/2010 0420	DLB		29458

Parameter	CAS Number	Analytical Method	Result	Q	PQL	MDL	Units	Run
Trichloroethene	79-01-6	8260B	1.4		0.50	0.024	ug/L	1
Trichlorofluoromethane	75-69-4	8260B	ND		0.50	0.051	ug/L	1
Vinyl chloride	75-01-4	8260B	ND		0.50	0.065	ug/L	1
Xylenes (total)	1330-20-7	8260B	ND		0.50	0.17	ug/L	1

Surrogate	Q	Run 1 % Recovery	Acceptance Limits
1,2-Dichloroethane-d4		101	70-130
Bromofluorobenzene		95	70-130
Toluene-d8		99	70-130

PQL = Practical quantitation limit
B = Detected in the method blank
E = Quantitation of compound exceeded the calibration range
ND = Not detected at or above the MDL
J = Estimated result < PQL and ≥ MDL
P = The RPD between two GC columns exceeds 40%
Where applicable, all soil sample analysis are reported on a dry weight basis unless flagged with a "W"
N = Recovery is out of criteria
H = Out of holding time

Volatile Organic Compounds by GC/MS

Client: ARCADIS U.S., Inc.
Laboratory ID: LC13017-017
Description: TRIP BLANK (031010)
Matrix: Aqueous
Date Sampled: 03/12/2010 0839
Date Received: 03/13/2010

Run	Prep Method	Analytical Method	Dilution	Analysis Date	Analyst	Prep Date	Batch
1	5030B	8260B	1	03/16/2010 0441	DLB		29458

Parameter	CAS Number	Analytical Method	Result	Q	PQL	MDL	Units	Run
Acetone	67-64-1	8260B	1.2	J	10	0.061	ug/L	1
Benzene	71-43-2	8260B	ND		0.50	0.027	ug/L	1
Bromodichloromethane	75-27-4	8260B	ND		0.50	0.17	ug/L	1
Bromoform	75-25-2	8260B	ND		0.50	0.010	ug/L	1
Bromomethane (Methyl bromide)	74-83-9	8260B	ND		0.50	0.20	ug/L	1
2-Butanone (MEK)	78-93-3	8260B	ND		10	2.0	ug/L	1
Carbon disulfide	75-15-0	8260B	ND		0.50	0.097	ug/L	1
Carbon tetrachloride	56-23-5	8260B	ND		0.50	0.085	ug/L	1
Chlorobenzene	108-90-7	8260B	ND		0.50	0.17	ug/L	1
Chloroethane	75-00-3	8260B	ND		0.50	0.17	ug/L	1
Chloroform	67-66-3	8260B	ND		0.50	0.17	ug/L	1
Chloromethane (Methyl chloride)	74-87-3	8260B	ND		0.50	0.17	ug/L	1
Cyclohexane	110-82-7	8260B	ND		0.50	0.30	ug/L	1
1,2-Dibromo-3-chloropropane (DBCP)	96-12-8	8260B	ND		0.50	0.069	ug/L	1
Dibromochloromethane	124-48-1	8260B	ND		0.50	0.17	ug/L	1
1,2-Dibromoethane (EDB)	106-93-4	8260B	ND		0.50	0.061	ug/L	1
1,3-Dichlorobenzene	541-73-1	8260B	ND		0.50	0.17	ug/L	1
1,2-Dichlorobenzene	95-50-1	8260B	ND		0.50	0.17	ug/L	1
1,4-Dichlorobenzene	106-46-7	8260B	ND		0.50	0.17	ug/L	1
Dichlorodifluoromethane	75-71-8	8260B	ND		0.50	0.071	ug/L	1
1,1-Dichloroethane	75-34-3	8260B	ND		0.50	0.054	ug/L	1
1,2-Dichloroethane	107-06-2	8260B	ND		0.50	0.023	ug/L	1
trans-1,2-Dichloroethene	156-60-5	8260B	ND		0.50	0.079	ug/L	1
1,1-Dichloroethene	75-35-4	8260B	ND		0.50	0.094	ug/L	1
cis-1,2-Dichloroethene	156-59-2	8260B	ND		0.50	0.087	ug/L	1
1,2-Dichloropropane	78-87-5	8260B	ND		0.50	0.081	ug/L	1
trans-1,3-Dichloropropene	10061-02-6	8260B	ND		0.50	0.18	ug/L	1
cis-1,3-Dichloropropene	10061-01-5	8260B	ND		0.50	0.090	ug/L	1
Ethylbenzene	100-41-4	8260B	ND		0.50	0.17	ug/L	1
2-Hexanone	591-78-6	8260B	ND		10	0.27	ug/L	1
Isopropylbenzene	98-82-8	8260B	ND		0.50	0.029	ug/L	1
Methyl acetate	79-20-9	8260B	ND		1.0	0.30	ug/L	1
Methyl tertiary butyl ether (MTBE)	1634-04-4	8260B	ND		0.50	0.019	ug/L	1
4-Methyl-2-pentanone	108-10-1	8260B	ND		10	0.31	ug/L	1
Methylcyclohexane	108-87-2	8260B	ND		5.0	0.95	ug/L	1
Methylene chloride	75-09-2	8260B	ND		0.50	0.17	ug/L	1
Styrene	100-42-5	8260B	ND		0.50	0.015	ug/L	1
1,1,2,2-Tetrachloroethane	79-34-5	8260B	ND		0.50	0.013	ug/L	1
Tetrachloroethene	127-18-4	8260B	ND		0.50	0.014	ug/L	1
Toluene	108-88-3	8260B	ND		0.50	0.17	ug/L	1
1,1,2-Trichloro-1,2,2-Trifluoroethane	76-13-1	8260B	ND		0.50	0.30	ug/L	1
1,2,4-Trichlorobenzene	120-82-1	8260B	ND		0.50	0.17	ug/L	1
1,1,1-Trichloroethane	71-55-6	8260B	ND		0.50	0.029	ug/L	1
1,1,2-Trichloroethane	79-00-5	8260B	ND		0.50	0.031	ug/L	1

PQL = Practical quantitation limit
B = Detected in the method blank
E = Quantitation of compound exceeded the calibration range
ND = Not detected at or above the MDL
J = Estimated result < PQL and ≥ MDL
P = The RPD between two GC columns exceeds 40%
Where applicable, all soil sample analysis are reported on a dry weight basis unless flagged with a "W"
N = Recovery is out of criteria
H = Out of holding time

Volatile Organic Compounds by GC/MS

Client: ARCADIS U.S., Inc.
Laboratory ID: LC13017-017
Description: TRIP BLANK (031010)
Matrix: Aqueous
Date Sampled: 03/12/2010 0839
Date Received: 03/13/2010

Run	Prep Method	Analytical Method	Dilution	Analysis Date	Analyst	Prep Date	Batch
1	5030B	8260B	1	03/16/2010 0441	DLB		29458

Parameter	CAS Number	Analytical Method	Result	Q	PQL	MDL	Units	Run
Trichloroethene	79-01-6	8260B	ND		0.50	0.024	ug/L	1
Trichlorofluoromethane	75-69-4	8260B	ND		0.50	0.051	ug/L	1
Vinyl chloride	75-01-4	8260B	ND		0.50	0.065	ug/L	1
Xylenes (total)	1330-20-7	8260B	ND		0.50	0.17	ug/L	1

Surrogate	Q	Run 1 % Recovery	Acceptance Limits
1,2-Dichloroethane-d4		103	70-130
Bromofluorobenzene		96	70-130
Toluene-d8		100	70-130

PQL = Practical quantitation limit
B = Detected in the method blank
E = Quantitation of compound exceeded the calibration range
ND = Not detected at or above the MDL
J = Estimated result < PQL and ≥ MDL
P = The RPD between two GC columns exceeds 40%
Where applicable, all soil sample analysis are reported on a dry weight basis unless flagged with a "W"
N = Recovery is out of criteria
H = Out of holding time

QC Summary

Volatile Organic Compounds by GC/MS - MB

Sample ID: LQ29458-001
Batch: 29458
Analytical Method: 8260B

Matrix: Aqueous
Prep Method: 5030B

Parameter	Result	Q	Dil	PQL	MDL	Units	Analysis Date
Acetone	ND		1	10	0.061	ug/L	03/15/2010 2156
Benzene	ND		1	0.50	0.027	ug/L	03/15/2010 2156
Bromodichloromethane	ND		1	0.50	0.17	ug/L	03/15/2010 2156
Bromoform	ND		1	0.50	0.010	ug/L	03/15/2010 2156
Bromomethane (Methyl bromide)	ND		1	0.50	0.20	ug/L	03/15/2010 2156
2-Butanone (MEK)	ND		1	10	2.0	ug/L	03/15/2010 2156
Carbon disulfide	ND		1	0.50	0.097	ug/L	03/15/2010 2156
Carbon tetrachloride	ND		1	0.50	0.085	ug/L	03/15/2010 2156
Chlorobenzene	ND		1	0.50	0.17	ug/L	03/15/2010 2156
Chloroethane	ND		1	0.50	0.17	ug/L	03/15/2010 2156
Chloroform	ND		1	0.50	0.17	ug/L	03/15/2010 2156
Chloromethane (Methyl chloride)	ND		1	0.50	0.17	ug/L	03/15/2010 2156
Cyclohexane	ND		1	0.50	0.30	ug/L	03/15/2010 2156
1,2-Dibromo-3-chloropropane (DBCP)	ND		1	0.50	0.069	ug/L	03/15/2010 2156
Dibromochloromethane	ND		1	0.50	0.17	ug/L	03/15/2010 2156
1,2-Dibromoethane (EDB)	ND		1	0.50	0.061	ug/L	03/15/2010 2156
1,3-Dichlorobenzene	ND		1	0.50	0.17	ug/L	03/15/2010 2156
1,4-Dichlorobenzene	ND		1	0.50	0.17	ug/L	03/15/2010 2156
1,2-Dichlorobenzene	ND		1	0.50	0.17	ug/L	03/15/2010 2156
Dichlorodifluoromethane	ND		1	0.50	0.071	ug/L	03/15/2010 2156
1,1-Dichloroethane	ND		1	0.50	0.054	ug/L	03/15/2010 2156
1,2-Dichloroethane	ND		1	0.50	0.023	ug/L	03/15/2010 2156
1,1-Dichloroethene	ND		1	0.50	0.094	ug/L	03/15/2010 2156
trans-1,2-Dichloroethene	ND		1	0.50	0.079	ug/L	03/15/2010 2156
cis-1,2-Dichloroethene	ND		1	0.50	0.087	ug/L	03/15/2010 2156
1,2-Dichloropropane	ND		1	0.50	0.081	ug/L	03/15/2010 2156
cis-1,3-Dichloropropene	ND		1	0.50	0.090	ug/L	03/15/2010 2156
trans-1,3-Dichloropropene	ND		1	0.50	0.18	ug/L	03/15/2010 2156
Ethylbenzene	ND		1	0.50	0.17	ug/L	03/15/2010 2156
2-Hexanone	ND		1	10	0.27	ug/L	03/15/2010 2156
Isopropylbenzene	ND		1	0.50	0.029	ug/L	03/15/2010 2156
Methyl acetate	ND		1	1.0	0.30	ug/L	03/15/2010 2156
Methyl tertiary butyl ether (MTBE)	ND		1	0.50	0.019	ug/L	03/15/2010 2156
4-Methyl-2-pentanone	ND		1	10	0.31	ug/L	03/15/2010 2156
Methylcyclohexane	ND		1	5.0	0.95	ug/L	03/15/2010 2156
Methylene chloride	ND		1	0.50	0.17	ug/L	03/15/2010 2156
Styrene	ND		1	0.50	0.015	ug/L	03/15/2010 2156
1,1,2,2-Tetrachloroethane	ND		1	0.50	0.013	ug/L	03/15/2010 2156
Tetrachloroethene	ND		1	0.50	0.014	ug/L	03/15/2010 2156
Toluene	ND		1	0.50	0.17	ug/L	03/15/2010 2156
1,1,2-Trichloro-1,2,2-Trifluoroethane	ND		1	0.50	0.30	ug/L	03/15/2010 2156
1,2,4-Trichlorobenzene	ND		1	0.50	0.17	ug/L	03/15/2010 2156
1,1,1-Trichloroethane	ND		1	0.50	0.029	ug/L	03/15/2010 2156
1,1,2-Trichloroethane	ND		1	0.50	0.031	ug/L	03/15/2010 2156

PQL = Practical quantitation limit
ND = Not detected at or above the MDL
P = The RPD between two GC columns exceeds 40%
J = Estimated result < PQL and ≥ MDL
N - Recovery is out of criteria
+ - RPD is out of criteria

Where applicable, all soil sample analysis are reported on a dry weight basis unless flagged with a "W"

Note: Calculations are performed before rounding to avoid round-off errors in calculated results

Volatile Organic Compounds by GC/MS - MB

Sample ID: LQ29458-001
Batch: 29458
Analytical Method: 8260B

Matrix: Aqueous
Prep Method: 5030B

Parameter	Result	Q	Dil	PQL	MDL	Units	Analysis Date
Trichloroethene	ND		1	0.50	0.024	ug/L	03/15/2010 2156
Trichlorofluoromethane	ND		1	0.50	0.051	ug/L	03/15/2010 2156
Vinyl chloride	ND		1	0.50	0.065	ug/L	03/15/2010 2156
Xylenes (total)	ND		1	0.50	0.17	ug/L	03/15/2010 2156

Surrogate	Q	% Rec	Acceptance Limit
Bromofluorobenzene		97	70-130
1,2-Dichloroethane-d4		101	70-130
Toluene-d8		100	70-130

PQL = Practical quantitation limit
ND = Not detected at or above the MDL
P = The RPD between two GC columns exceeds 40%
J = Estimated result < PQL and ≥ MDL
N - Recovery is out of criteria
+ - RPD is out of criteria

Where applicable, all soil sample analysis are reported on a dry weight basis unless flagged with a "W"

Note: Calculations are performed before rounding to avoid round-off errors in calculated results

Volatile Organic Compounds by GC/MS - LCS

Sample ID: LQ29458-002
Batch: 29458
Analytical Method: 8260B

Matrix: Aqueous
Prep Method: 5030B

Parameter	Spike Amount (ug/L)	Result (ug/L)	Q	Dil	% Rec	% Rec Limit	Analysis Date
Acetone	100	100		1	103	46-153	03/15/2010 2030
Benzene	50	51		1	103	70-130	03/15/2010 2030
Bromodichloromethane	50	50		1	100	70-130	03/15/2010 2030
Bromoform	50	51		1	101	70-130	03/15/2010 2030
Bromomethane (Methyl bromide)	50	56		1	112	60-140	03/15/2010 2030
2-Butanone (MEK)	100	100		1	102	60-140	03/15/2010 2030
Carbon disulfide	50	53		1	107	60-140	03/15/2010 2030
Carbon tetrachloride	50	57		1	115	70-130	03/15/2010 2030
Chlorobenzene	50	51		1	101	70-130	03/15/2010 2030
Chloroethane	50	55		1	109	42-163	03/15/2010 2030
Chloroform	50	53		1	106	70-130	03/15/2010 2030
Chloromethane (Methyl chloride)	50	50		1	101	20-158	03/15/2010 2030
Cyclohexane	50	51		1	102	70-130	03/15/2010 2030
1,2-Dibromo-3-chloropropane (DBCP)	50	56		1	111	70-130	03/15/2010 2030
Dibromochloromethane	50	51		1	102	70-130	03/15/2010 2030
1,2-Dibromoethane (EDB)	50	50		1	99	70-130	03/15/2010 2030
1,3-Dichlorobenzene	50	54		1	107	70-130	03/15/2010 2030
1,4-Dichlorobenzene	50	54		1	108	70-130	03/15/2010 2030
1,2-Dichlorobenzene	50	54		1	108	70-130	03/15/2010 2030
Dichlorodifluoromethane	50	47		1	93	60-140	03/15/2010 2030
1,1-Dichloroethane	50	53		1	106	70-130	03/15/2010 2030
1,2-Dichloroethane	50	51		1	101	70-130	03/15/2010 2030
1,1-Dichloroethene	50	52		1	105	70-130	03/15/2010 2030
trans-1,2-Dichloroethene	50	53		1	106	70-130	03/15/2010 2030
cis-1,2-Dichloroethene	50	53		1	106	70-130	03/15/2010 2030
1,2-Dichloropropane	50	51		1	102	70-130	03/15/2010 2030
cis-1,3-Dichloropropene	50	51		1	102	70-130	03/15/2010 2030
trans-1,3-Dichloropropene	50	51		1	102	70-130	03/15/2010 2030
Ethylbenzene	50	52		1	105	70-130	03/15/2010 2030
2-Hexanone	100	110		1	110	60-140	03/15/2010 2030
Isopropylbenzene	50	57		1	114	70-130	03/15/2010 2030
Methyl acetate	50	55		1	109	15-128	03/15/2010 2030
Methyl tertiary butyl ether (MTBE)	50	55		1	109	70-130	03/15/2010 2030
4-Methyl-2-pentanone	100	100		1	101	60-140	03/15/2010 2030
Methylcyclohexane	50	53		1	106	70-130	03/15/2010 2030
Methylene chloride	50	54		1	109	70-130	03/15/2010 2030
Styrene	50	50		1	100	70-130	03/15/2010 2030
1,1,2,2-Tetrachloroethane	50	58		1	115	70-130	03/15/2010 2030
Tetrachloroethene	50	50		1	101	70-130	03/15/2010 2030
Toluene	50	51		1	103	70-130	03/15/2010 2030
1,1,2-Trichloro-1,2,2-Trifluoroethane	50	47		1	94	70-130	03/15/2010 2030
1,2,4-Trichlorobenzene	50	59		1	118	70-130	03/15/2010 2030
1,1,1-Trichloroethane	50	55		1	110	70-130	03/15/2010 2030
1,1,2-Trichloroethane	50	52		1	103	70-130	03/15/2010 2030

PQL = Practical quantitation limit
ND = Not detected at or above the MDL
P = The RPD between two GC columns exceeds 40%
J = Estimated result < PQL and ≥ MDL
N - Recovery is out of criteria
+ - RPD is out of criteria

Where applicable, all soil sample analysis are reported on a dry weight basis unless flagged with a "W"

Note: Calculations are performed before rounding to avoid round-off errors in calculated results

Volatile Organic Compounds by GC/MS - LCS

Sample ID: LQ29458-002
Batch: 29458
Analytical Method: 8260B

Matrix: Aqueous
Prep Method: 5030B

Parameter	Spike Amount (ug/L)	Result (ug/L)	Q	Dil	% Rec	% Rec Limit	Analysis Date
Trichloroethene	50	52		1	103	70-130	03/15/2010 2030
Trichlorofluoromethane	50	52		1	104	60-140	03/15/2010 2030
Vinyl chloride	50	55		1	110	60-140	03/15/2010 2030
Xylenes (total)	100	110		1	110	70-130	03/15/2010 2030

Surrogate	Q	% Rec	Acceptance Limit
Bromofluorobenzene		97	70-130
1,2-Dichloroethane-d4		95	70-130
Toluene-d8		96	70-130

PQL = Practical quantitation limit
ND = Not detected at or above the MDL
P = The RPD between two GC columns exceeds 40%
J = Estimated result < PQL and ≥ MDL
N - Recovery is out of criteria
+ - RPD is out of criteria

Where applicable, all soil sample analysis are reported on a dry weight basis unless flagged with a "W"

Note: Calculations are performed before rounding to avoid round-off errors in calculated results

Volatile Organic Compounds by GC/MS - LCSD

Sample ID: LQ29458-003
Batch: 29458
Analytical Method: 8260B

Matrix: Aqueous
Prep Method: 5030B

Parameter	Spike Amount (ug/L)	Result (ug/L)	Q	Dil	% Rec	% RPD	% Rec Limit	% RPD Limit	Analysis Date
Acetone	100	120		1	118	14	46-153	20	03/15/2010 2052
Benzene	50	52		1	103	0.63	70-130	20	03/15/2010 2052
Bromodichloromethane	50	51		1	103	2.4	70-130	20	03/15/2010 2052
Bromoform	50	53		1	105	3.8	70-130	20	03/15/2010 2052
Bromomethane (Methyl bromide)	50	53		1	107	4.7	60-140	20	03/15/2010 2052
2-Butanone (MEK)	100	110		1	114	12	60-140	20	03/15/2010 2052
Carbon disulfide	50	52		1	103	3.1	60-140	20	03/15/2010 2052
Carbon tetrachloride	50	57		1	113	1.2	70-130	20	03/15/2010 2052
Chlorobenzene	50	51		1	103	1.7	70-130	20	03/15/2010 2052
Chloroethane	50	53		1	105	3.7	42-163	20	03/15/2010 2052
Chloroform	50	51		1	103	2.9	70-130	20	03/15/2010 2052
Chloromethane (Methyl chloride)	50	52		1	104	2.9	20-158	20	03/15/2010 2052
Cyclohexane	50	50		1	100	1.9	70-130	20	03/15/2010 2052
1,2-Dibromo-3-chloropropane (DBCP)	50	54		1	108	2.6	70-130	20	03/15/2010 2052
Dibromochloromethane	50	53		1	106	4.4	70-130	20	03/15/2010 2052
1,2-Dibromoethane (EDB)	50	53		1	106	6.0	70-130	20	03/15/2010 2052
1,3-Dichlorobenzene	50	54		1	108	0.40	70-130	20	03/15/2010 2052
1,4-Dichlorobenzene	50	55		1	109	1.4	70-130	20	03/15/2010 2052
1,2-Dichlorobenzene	50	54		1	108	0.62	70-130	20	03/15/2010 2052
Dichlorodifluoromethane	50	47		1	93	0.13	60-140	20	03/15/2010 2052
1,1-Dichloroethane	50	51		1	103	2.7	70-130	20	03/15/2010 2052
1,2-Dichloroethane	50	52		1	103	2.1	70-130	20	03/15/2010 2052
1,1-Dichloroethene	50	50		1	100	5.1	70-130	20	03/15/2010 2052
trans-1,2-Dichloroethene	50	51		1	101	4.2	70-130	20	03/15/2010 2052
cis-1,2-Dichloroethene	50	52		1	103	3.3	70-130	20	03/15/2010 2052
1,2-Dichloropropane	50	53		1	107	4.2	70-130	20	03/15/2010 2052
cis-1,3-Dichloropropene	50	53		1	106	4.4	70-130	20	03/15/2010 2052
trans-1,3-Dichloropropene	50	53		1	106	4.5	70-130	20	03/15/2010 2052
Ethylbenzene	50	52		1	105	0.24	70-130	20	03/15/2010 2052
2-Hexanone	100	120		1	123	11	60-140	20	03/15/2010 2052
Isopropylbenzene	50	57		1	114	0.30	70-130	20	03/15/2010 2052
Methyl acetate	50	58		1	116	6.4	15-128	20	03/15/2010 2052
Methyl tertiary butyl ether (MTBE)	50	53		1	107	2.7	70-130	20	03/15/2010 2052
4-Methyl-2-pentanone	100	110		1	109	8.1	60-140	20	03/15/2010 2052
Methylcyclohexane	50	52		1	104	1.2	70-130	20	03/15/2010 2052
Methylene chloride	50	53		1	105	3.4	70-130	20	03/15/2010 2052
Styrene	50	51		1	101	1.2	70-130	20	03/15/2010 2052
1,1,2,2-Tetrachloroethane	50	60		1	119	3.6	70-130	20	03/15/2010 2052
Tetrachloroethene	50	51		1	102	1.0	70-130	20	03/15/2010 2052
Toluene	50	53		1	107	3.6	70-130	20	03/15/2010 2052
1,1,2-Trichloro-1,2,2-Trifluoroethane	50	46		1	92	2.1	70-130	20	03/15/2010 2052
1,2,4-Trichlorobenzene	50	56		1	113	5.0	70-130	20	03/15/2010 2052
1,1,1-Trichloroethane	50	54		1	108	1.6	70-130	20	03/15/2010 2052
1,1,2-Trichloroethane	50	54		1	109	4.9	70-130	20	03/15/2010 2052

PQL = Practical quantitation limit
ND = Not detected at or above the MDL
P = The RPD between two GC columns exceeds 40%
J = Estimated result < PQL and ≥ MDL
N - Recovery is out of criteria
+ - RPD is out of criteria

Where applicable, all soil sample analysis are reported on a dry weight basis unless flagged with a "W"

Note: Calculations are performed before rounding to avoid round-off errors in calculated results

Volatile Organic Compounds by GC/MS - LCSD

Sample ID: LQ29458-003
Batch: 29458
Analytical Method: 8260B

Matrix: Aqueous
Prep Method: 5030B

Parameter	Spike Amount (ug/L)	Result (ug/L)	Q	Dil	% Rec	% RPD	% Rec Limit	% RPD Limit	Analysis Date
Trichloroethene	50	52		1	104	0.095	70-130	20	03/15/2010 2052
Trichlorofluoromethane	50	51		1	101	2.8	60-140	20	03/15/2010 2052
Vinyl chloride	50	54		1	109	1.1	60-140	20	03/15/2010 2052
Xylenes (total)	100	110		1	110	0.0073	70-130	20	03/15/2010 2052

Surrogate	Q	% Rec	Acceptance Limit
Bromofluorobenzene		100	70-130
1,2-Dichloroethane-d4		97	70-130
Toluene-d8		100	70-130

PQL = Practical quantitation limit
ND = Not detected at or above the MDL
P = The RPD between two GC columns exceeds 40%
J = Estimated result < PQL and ≥ MDL
N - Recovery is out of criteria
+ - RPD is out of criteria

Where applicable, all soil sample analysis are reported on a dry weight basis unless flagged with a "W"

Note: Calculations are performed before rounding to avoid round-off errors in calculated results

SHEALY ENVIRONMENTAL SERVICES, INC.

SHEALY Chain of Custody Record

SHEALY ENVIRONMENTAL SERVICES, INC.
106 Vantage Point Drive
West Columbia, South Carolina 29172
Telephone No. (803) 791-9700 Fax No. (803) 791-9111

Number 104846

Client	ARCADIS
Address	801 Corporate Center Dr Suite 300
City	Raleigh
State	NC
Zip Code	27607
Project Name	FST39 Hunter Stewart
Project No.	GP09HAFS.F39A.DG0FI
P.O. No.	
Report to Contact	Shelley Gibbons
Sampler's Signature	X [signature]
Printed Name	Robert B. Sheely
Telephone No. / Fax No. / E-mail	919 854-1282 / 919 854-5448
Waybill No.	
Quote No.	
Page	1 of 2
Lot No.	LC13017

Analysis (Attach list if more space is needed.)

Sample ID / Description (Containers for each sample may be combined on one line.)	Date	Time	G=Grab C=Composite	Matrix: Aqueous	Solid	Non-Aqueous	No. of Containers by Preservative Type: Unpres.	H2SO4	HNO3	HCl	NaOH	5035 Kit		VOC 8260B	Remarks / Cooler I.D.
G4MW019 (031010)	3/10/10	0853	G	X						3				X	
G4MW020 (031010)	3/10/10	0950	G	X						3				X	
G4MW023 (031010)	3/10/10	1105	G	X						3				X	
G4MW016 (031010)	3/10/10	1222	G	X						3				X	
G4MW017 (031010)	3/10/10	1250	G	X						3				X	
G4MW025 (031010)	3/10/10	1351	G	X						3				X	
G4MW024 (031010)	3/10/10	1440	G	X						3				X	
G4MW024 (031010) MS/MSD	3/10/10	1440	G	X						6				X	
G4MW031 (031010)	3/10/10	1625	G	X						3				X	
Dup-5 (031110)	3/11/10	0700	G	X						3				X	

Possible Hazard Identification: ☐ Non-Hazard ☐ Flammable ☐ Skin Irritant ☐ Poison ☒ Unknown

Sample Disposal: ☐ Return to Client ☒ Disposal by Lab

Note: All samples are retained for six weeks from receipt unless other arrangements are made.

Turn Around Time Required (Prior lab approval required for expedited TAT.): ☒ Standard ☐ Rush (Specify)

QC Requirements (Specify):

	Date	Time		Date	Time
1. Relinquished by [signature]	3/12/10	1400	1. Received by Fed Ex		
2. Relinquished by			2. Received by		
3. Relinquished by Fed Ex	3/13/10	0839	3. Laboratory received by [signature]	3/13/10	0839

Comments:

LAB USE ONLY: Received on Ice (Circle): Yes / No Ice Pack

Receipt Temp. 4.5 °C

DISTRIBUTION: WHITE & YELLOW-Return to laboratory with Sample(s); PINK-Field/Client Copy

Document Number: F-AD-012 Effective Date: 09-04-02

SHEALY ENVIRONMENTAL SERVICES, INC.

SHEALY ENVIRONMENTAL SERVICES, INC.

SHEALY Chain of Custody Record

SHEALY ENVIRONMENTAL SERVICES, INC.
106 Vantage Point Drive
West Columbia, South Carolina 29172
Telephone No. (803) 791-9700 Fax No. (803) 791-9111

Number 104845

Client: ARCADIS	Report to Contact: Shelley Gibbons	Telephone No. / Fax No. / E-mail: 919 854-1282 / 919 854-5448	Quote No.
Address: 801 Corporate Center Dr Suite 300	Sampler's Signature: X	Waybill No.	Page 2 of 2
City: Raleigh; State: NC; Zip Code: 27607	Printed Name: Robert B. Sheely	Analysis (Attach list if more space is needed.)	
Project Name: FST 39 Hunter Stewart			
Project No.: GP09HAFS.F39A.DG0FI	P.O. No.		Lot No.: L03017

Sample ID / Description (Containers for each sample may be combined on one line.)	Date	Time	G=Grab C=Composite	Matrix: Aqueous	Solid	Non-Aqueous	No. of Containers by Preservative Type: Unpres.	H2SO4	HNO3	HCl	NaOH	S2O3 Kit	VOC 8260B										Remarks / Cooler I.D.
G4MW027 (031110)	3/11/10	0859	G	X						3			X										
G4MW028 (031110)	3/11/10	1033	G	X						3			X										
G4MW029 (031110)	3/11/10	1124	G	X						3			X										
G4MW011 (031110)	3/11/10	1515	G	X						3			X										
G4MW006 (031210)	3/12/10	0815	G	X						3			X										
G4MW018 (031210)	3/12/10	0842	G	X						3			X										
G4MW010 (031210)	3/12/10	0947	G	X						3			X										
Trip Blank (031010)	Lab	Lab		X						2			X										

Possible Hazard Identification: ☐ Non-Hazard ☐ Flammable ☐ Skin Irritant ☐ Poison ☒ Unknown

Sample Disposal: ☐ Return to Client ☒ Disposal by Lab

Note: All samples are retained for six weeks from receipt unless other arrangements are made.

Turn Around Time Required (Prior lab approval required for expedited TAT.): ☒ Standard ☐ Rush (Specify)

QC Requirements (Specify):

	Date	Time		Date	Time
1. Relinquished by	3/12/10	1400	1. Received by: Fed Ex		
2. Relinquished by			2. Received by		
3. Relinquished by: Fed Ex	3/13/10	0839	3. Laboratory received by	3/13/10	0839

Comments:

LAB USE ONLY: Received on ice (Circle) Yes No Ice Pack — Receipt Temp. 4.5 °C

DISTRIBUTION: WHITE & YELLOW-Return to laboratory with Sample(s); PINK-Field/Client Copy

Document Number: F-AD-012 Effective Date: 08-04-02

SHEALY ENVIRONMENTAL SERVICES, INC.

Shealy Environmental Services, Inc.
Document Number: F-AD-016
Revision Number: 6

Page 1 of 1
Replaces Date: 09/22/06
Effective Date: 05/29/07

Sample Receipt Checklist (SRC)

Client: ARCADIS Cooler Inspected by/date: [illegible] 3/13/10 Lot #: LCr 3017

Means of receipt: ☐ SESI ☐ Client ☐ UPS ☑ FedEx ☐ Airborne Exp ☐ Other

Yes ☑	No ☐	NA ☐	1. Were custody seals present on the cooler?
Yes ☑	No ☐	NA ☐	2. If custody seals were present, were they intact and unbroken?

Cooler ID/temperature upon receipt 4.5 °C / °C / °C / °C / °C / °C / °C / °C

Method: ☐ Temperature Blank ☑ Against Bottles
Method of coolant: ☑ Wet Ice ☐ Blue Ice ☐ Dry Ice ☐ None

If response is No (or Yes for 14, 15, 16), an explanation/resolution must be provided.

Yes ☐	No ☐	NA ☑	3. If temperature of any cooler exceeded 6.0°C, was Project Manager notified? PM notified by SRC, phone, note (circle one), other: _____. (For coolers received via commercial courier, PMs are to be notified immediately.
Yes ☑	No ☐	NA ☐	4. Is the commercial courier's packing slip attached to this form?
Yes ☐	No ☑	NA ☐	5. Were proper custody procedures (relinquished/received) followed?
Yes ☑	No ☐	NA ☐	6. Were sample IDs listed?
Yes ☑	No ☐	NA ☐	7. Was collection date & time listed?
Yes ☑	No ☐	NA ☐	8. Were tests to be performed listed on the COC or was quote # provided?
Yes ☑	No ☐	NA ☐	9. Did all samples arrive in the proper containers for each test?
Yes ☑	No ☐	NA ☐	10. Did all container label information (ID, date, time) agree with COC?
Yes ☑	No ☐	NA ☐	11. Did all containers arrive in good condition (unbroken, lids on, etc.)?
Yes ☑	No ☐	NA ☐	12. Was adequate sample volume available?
Yes ☑	No ☐	NA ☐	13. Were all samples received within ½ the holding time or 48 hours, whichever comes first?
Yes ☐	No ☑	NA ☐	14. Were any samples containers missing?
Yes ☐	No ☑	NA ☐	15. Were there any excess samples not listed on COC?
Yes ☐	No ☐	NA ☑	16. Were bubbles present >"pea-size" (¼"or 6mm in diameter) in any VOA vials?
Yes ☐	No ☐	NA ☑	17. Were all metals/O&G/HEM/nutrient samples received at a pH of <2?
Yes ☐	No ☐	NA ☑	18. Were all cyanide and/or sulfide samples received at a pH >12?
Yes ☐	No ☐	NA ☑	19. Were all applicable NH3/TKN/cyanide/phenol/BNA/pest/PCB/herb (<0.2mg/L) and toxicity (<0.1mg/L) samples free of residual chlorine?
Yes ☐	No ☐	NA ☑	20. Were collection temperatures documented on the COC for NC samples?

Sample Preservation (Must be completed for any sample(s) incorrectly preserved or with headspace.)

Sample(s) _____ were received incorrectly preserved and were adjusted accordingly in sample receiving with _____ (H_2SO_4,HNO_3,HCl,NaOH) with the SR # (number)

Sample(s) _____ were received with bubbles >6 mm in diameter.

Sample(s) _____ were received with TRC >0.2 mg/L for NH3/TKN/cyanide/BNA/pest/PCB/herb.

Toxicity sample(s) _____ analyzed by method 330.5.

Corrective Action taken, if necessary:
Was client notified: Yes ☐ No ☐
SESI employee: _____
Comments: _____

...ne 3/12/10 FedEx Tracking Number 871525021868
...nder's ...me ROBBY SHEALY Phone 864 216-5450
Company ARCADIS
Address 30 PATEWOOD DR STE 155
...y GREENVILLE State SC ZIP 29615-6809
...ur Internal Billing Reference CP09HAFS F39A DGAFT

Report of Analysis

ARCADIS U.S., Inc.
30 Patewood Drive
Suite 155
Greenville, SC 29615
Attention: Allison Fang

Project Name: Hunter Stewart FST-39

Project Number: GP08HAFS.F39A

Lot Number: MJ27027

Date Completed: 10/28/2011

Nisreen Saikaly
Project Manager

This report shall not be reproduced, except in its entirety, without the written approval of Shealy Environmental Services, Inc.

The following non-paginated documents are considered part of this report: Chain of Custody Record and Sample Receipt Checklist.

MJ27027

Case Narrative
ARCADIS U.S., Inc.
Lot Number: MJ27027

This Report of Analysis contains the analytical result(s) for the sample(s) listed on the Sample Summary following this Case Narrative. The sample receiving date is documented in the header information associated with each sample.

All results listed in this report relate only to the samples that are contained within this report.

Sample receipt, sample analysis, and data review have been performed in accordance with the most current approved NELAC standards, the Shealy Environmental Services, Inc. ("Shealy") Quality Assurance Management Plan (QAMP), standard operating procedures (SOPs), and Shealy policies. Any exceptions to the NELAC standards, the QAMP, SOPs or policies are qualified on the results page or discussed below.

Shealy is not NELAC certified for Phosphorus by 365.1 but is certified in SC and NC.

Shealy is not NELAC certified for VPH, but is certified for VPH in NC.

If you have any questions regarding this report please contact the Shealy Project Manager listed on the cover page.

Volatile Organic Compounds

Trip blank sample -002 has a detection for Chloromethane (Methyl chloride). The associated sample results were non-detect, therefore the results were reported and no corrective action was required.

Sample Summary

ARCADIS U.S., Inc.

Lot Number: MJ27027

Sample Number	Sample ID	Matrix	Date Sampled	Date Received
001	G4MW058 (10252011)	Aqueous	10/25/2011 1425	10/27/2011
002	Trip Blank	Aqueous	10/25/2011 1425	10/27/2011

(2 samples)

Executive Summary

ARCADIS U.S., Inc.

Lot Number: MJ27027

Sample	Sample ID	Matrix	Parameter	Method	Result	Q	Units	Page
001	G4MW058 (10252011)	Aqueous	2-Butanone (MEK)	8260B	15		ug/L	5
001	G4MW058 (10252011)	Aqueous	Carbon disulfide	8260B	0.34	BJ	ug/L	5
001	G4MW058 (10252011)	Aqueous	Toluene	8260B	0.47	J	ug/L	5
002	Trip Blank	Aqueous	Carbon disulfide	8260B	0.68	BJ	ug/L	7
002	Trip Blank	Aqueous	Chloromethane (Methyl chloride)	8260B	1.3		ug/L	7

(5 detections)

Volatile Organic Compounds by GC/MS

Client: ARCADIS U.S., Inc.
Laboratory ID: MJ27027-001
Description: G4MW058 (10252011)
Matrix: Aqueous
Date Sampled: 10/25/2011 1425
Date Received: 10/27/2011

Run	Prep Method	Analytical Method	Dilution	Analysis Date	Analyst	Prep Date	Batch
1	5030B	8260B	1	10/27/2011 2240	JJG		70599

Parameter	CAS Number	Analytical Method	Result	Q	PQL	MDL	Units	Run
Acetone	67-64-1	8260B	ND		20	6.7	ug/L	1
Benzene	71-43-2	8260B	ND		1.0	0.13	ug/L	1
Bromodichloromethane	75-27-4	8260B	ND		1.0	0.33	ug/L	1
Bromoform	75-25-2	8260B	ND		1.0	0.66	ug/L	1
Bromomethane (Methyl bromide)	74-83-9	8260B	ND		2.0	0.80	ug/L	1
2-Butanone (MEK)	78-93-3	8260B	15		10	2.0	ug/L	1
Carbon disulfide	75-15-0	8260B	0.34	BJ	1.0	0.097	ug/L	1
Carbon tetrachloride	56-23-5	8260B	ND		1.0	0.14	ug/L	1
Chlorobenzene	108-90-7	8260B	ND		2.0	0.33	ug/L	1
Chloroethane	75-00-3	8260B	ND		2.0	0.47	ug/L	1
Chloroform	67-66-3	8260B	ND		1.0	0.33	ug/L	1
Chloromethane (Methyl chloride)	74-87-3	8260B	ND		1.0	0.35	ug/L	1
Dibromochloromethane	124-48-1	8260B	ND		1.0	0.33	ug/L	1
1,4-Dichlorobenzene	106-46-7	8260B	ND		1.0	0.33	ug/L	1
1,3-Dichlorobenzene	541-73-1	8260B	ND		1.0	0.33	ug/L	1
1,2-Dichlorobenzene	95-50-1	8260B	ND		1.0	0.33	ug/L	1
1,2-Dichloroethane	107-06-2	8260B	ND		1.0	0.15	ug/L	1
1,1-Dichloroethane	75-34-3	8260B	ND		1.0	0.13	ug/L	1
trans-1,2-Dichloroethene	156-60-5	8260B	ND		1.0	0.21	ug/L	1
cis-1,2-Dichloroethene	156-59-2	8260B	ND		1.0	0.12	ug/L	1
1,1-Dichloroethene	75-35-4	8260B	ND		1.0	0.16	ug/L	1
1,2-Dichloropropane	78-87-5	8260B	ND		1.0	0.19	ug/L	1
trans-1,3-Dichloropropene	10061-02-6	8260B	ND		1.0	0.11	ug/L	1
cis-1,3-Dichloropropene	10061-01-5	8260B	ND		1.0	0.092	ug/L	1
Ethylbenzene	100-41-4	8260B	ND		1.0	0.33	ug/L	1
2-Hexanone	591-78-6	8260B	ND		10	0.27	ug/L	1
Methyl tertiary butyl ether (MTBE)	1634-04-4	8260B	ND		1.0	0.40	ug/L	1
4-Methyl-2-pentanone	108-10-1	8260B	ND		10	0.31	ug/L	1
Methylene chloride	75-09-2	8260B	ND		1.0	0.33	ug/L	1
Styrene	100-42-5	8260B	ND		1.0	0.12	ug/L	1
1,1,2,2-Tetrachloroethane	79-34-5	8260B	ND		1.0	0.16	ug/L	1
Tetrachloroethene	127-18-4	8260B	ND		1.0	0.13	ug/L	1
Toluene	108-88-3	8260B	0.47	J	1.0	0.33	ug/L	1
1,2,4-Trichlorobenzene	120-82-1	8260B	ND		1.0	0.51	ug/L	1
1,1,2-Trichloroethane	79-00-5	8260B	ND		1.0	0.21	ug/L	1
1,1,1-Trichloroethane	71-55-6	8260B	ND		1.0	0.074	ug/L	1
Trichloroethene	79-01-6	8260B	ND		1.0	0.18	ug/L	1
Vinyl chloride	75-01-4	8260B	ND		1.0	0.054	ug/L	1
Xylenes (total)	1330-20-7	8260B	ND		1.0	0.33	ug/L	1

PQL = Practical quantitation limit
B = Detected in the method blank
E = Quantitation of compound exceeded the calibration range
H = Out of holding time
ND = Not detected at or above the MDL
J = Estimated result < PQL and ≥ MDL
P = The RPD between two GC columns exceeds 40%
N = Recovery is out of criteria
Where applicable, all soil sample analysis are reported on a dry weight basis unless flagged with a "W"
* = Reportable result (only when report all runs)

Volatile Organic Compounds by GC/MS

Client: ARCADIS U.S., Inc.
Laboratory ID: MJ27027-001
Description: G4MW058 (10252011)
Matrix: Aqueous
Date Sampled: 10/25/2011 1425
Date Received: 10/27/2011

Surrogate	Q	Run 1 % Recovery	Acceptance Limits
1,2-Dichloroethane-d4		98	70-130
Bromofluorobenzene		94	70-130
Toluene-d8		103	70-130

PQL = Practical quantitation limit
B = Detected in the method blank
E = Quantitation of compound exceeded the calibration range
H = Out of holding time
ND = Not detected at or above the MDL
J = Estimated result < PQL and ≥ MDL
P = The RPD between two GC columns exceeds 40%
N = Recovery is out of criteria
Where applicable, all soil sample analysis are reported on a dry weight basis unless flagged with a "W"
* = Reportable result (only when report all runs)

Volatile Organic Compounds by GC/MS

Client: ARCADIS U.S., Inc.
Laboratory ID: MJ27027-002
Description: Trip Blank
Matrix: Aqueous
Date Sampled: 10/25/2011 1425
Date Received: 10/27/2011

Run	Prep Method	Analytical Method	Dilution	Analysis Date	Analyst	Prep Date	Batch
1	5030B	8260B	1	10/27/2011 2137	JJG		70599

Parameter	CAS Number	Analytical Method	Result	Q	PQL	MDL	Units	Run
Acetone	67-64-1	8260B	ND		20	6.7	ug/L	1
Benzene	71-43-2	8260B	ND		1.0	0.13	ug/L	1
Bromodichloromethane	75-27-4	8260B	ND		1.0	0.33	ug/L	1
Bromoform	75-25-2	8260B	ND		1.0	0.66	ug/L	1
Bromomethane (Methyl bromide)	74-83-9	8260B	ND		2.0	0.80	ug/L	1
2-Butanone (MEK)	78-93-3	8260B	ND		10	2.0	ug/L	1
Carbon disulfide	75-15-0	8260B	0.68	BJ	1.0	0.097	ug/L	1
Carbon tetrachloride	56-23-5	8260B	ND		1.0	0.14	ug/L	1
Chlorobenzene	108-90-7	8260B	ND		2.0	0.33	ug/L	1
Chloroethane	75-00-3	8260B	ND		2.0	0.47	ug/L	1
Chloroform	67-66-3	8260B	ND		1.0	0.33	ug/L	1
Chloromethane (Methyl chloride)	74-87-3	8260B	1.3		1.0	0.35	ug/L	1
Dibromochloromethane	124-48-1	8260B	ND		1.0	0.33	ug/L	1
1,4-Dichlorobenzene	106-46-7	8260B	ND		1.0	0.33	ug/L	1
1,3-Dichlorobenzene	541-73-1	8260B	ND		1.0	0.33	ug/L	1
1,2-Dichlorobenzene	95-50-1	8260B	ND		1.0	0.33	ug/L	1
1,2-Dichloroethane	107-06-2	8260B	ND		1.0	0.15	ug/L	1
1,1-Dichloroethane	75-34-3	8260B	ND		1.0	0.13	ug/L	1
trans-1,2-Dichloroethene	156-60-5	8260B	ND		1.0	0.21	ug/L	1
cis-1,2-Dichloroethene	156-59-2	8260B	ND		1.0	0.12	ug/L	1
1,1-Dichloroethene	75-35-4	8260B	ND		1.0	0.16	ug/L	1
1,2-Dichloropropane	78-87-5	8260B	ND		1.0	0.19	ug/L	1
trans-1,3-Dichloropropene	10061-02-6	8260B	ND		1.0	0.11	ug/L	1
cis-1,3-Dichloropropene	10061-01-5	8260B	ND		1.0	0.092	ug/L	1
Ethylbenzene	100-41-4	8260B	ND		1.0	0.33	ug/L	1
2-Hexanone	591-78-6	8260B	ND		10	0.27	ug/L	1
Methyl tertiary butyl ether (MTBE)	1634-04-4	8260B	ND		1.0	0.40	ug/L	1
4-Methyl-2-pentanone	108-10-1	8260B	ND		10	0.31	ug/L	1
Methylene chloride	75-09-2	8260B	ND		1.0	0.33	ug/L	1
Styrene	100-42-5	8260B	ND		1.0	0.12	ug/L	1
1,1,2,2-Tetrachloroethane	79-34-5	8260B	ND		1.0	0.16	ug/L	1
Tetrachloroethene	127-18-4	8260B	ND		1.0	0.13	ug/L	1
Toluene	108-88-3	8260B	ND		1.0	0.33	ug/L	1
1,2,4-Trichlorobenzene	120-82-1	8260B	ND		1.0	0.51	ug/L	1
1,1,2-Trichloroethane	79-00-5	8260B	ND		1.0	0.21	ug/L	1
1,1,1-Trichloroethane	71-55-6	8260B	ND		1.0	0.074	ug/L	1
Trichloroethene	79-01-6	8260B	ND		1.0	0.18	ug/L	1
Vinyl chloride	75-01-4	8260B	ND		1.0	0.054	ug/L	1
Xylenes (total)	1330-20-7	8260B	ND		1.0	0.33	ug/L	1

PQL = Practical quantitation limit
B = Detected in the method blank
E = Quantitation of compound exceeded the calibration range
H = Out of holding time
ND = Not detected at or above the MDL
J = Estimated result < PQL and ≥ MDL
P = The RPD between two GC columns exceeds 40%
N = Recovery is out of criteria
Where applicable, all soil sample analysis are reported on a dry weight basis unless flagged with a "W"
* = Reportable result (only when report all runs)

Volatile Organic Compounds by GC/MS

Client: ARCADIS U.S., Inc.
Laboratory ID: MJ27027-002
Description: Trip Blank
Matrix: Aqueous
Date Sampled: 10/25/2011 1425
Date Received: 10/27/2011

Surrogate	Q	Run 1 % Recovery	Acceptance Limits
1,2-Dichloroethane-d4		96	70-130
Bromofluorobenzene		93	70-130
Toluene-d8		100	70-130

PQL = Practical quantitation limit
B = Detected in the method blank
E = Quantitation of compound exceeded the calibration range
H = Out of holding time
ND = Not detected at or above the MDL
J = Estimated result < PQL and ≥ MDL
P = The RPD between two GC columns exceeds 40%
N = Recovery is out of criteria
Where applicable, all soil sample analysis are reported on a dry weight basis unless flagged with a "W"
* = Reportable result (only when report all runs)

QC Summary

Volatile Organic Compounds by GC/MS - MB

Sample ID: MQ70599-001
Batch: 70599
Analytical Method: 8260B

Matrix: Aqueous
Prep Method: 5030B

Parameter	Result	Q	Dil	PQL	MDL	Units	Analysis Date
Acetone	ND		1	20	6.7	ug/L	10/27/2011 2057
Benzene	ND		1	1.0	0.13	ug/L	10/27/2011 2057
Bromodichloromethane	ND		1	1.0	0.33	ug/L	10/27/2011 2057
Bromoform	ND		1	1.0	0.66	ug/L	10/27/2011 2057
Bromomethane (Methyl bromide)	ND		1	2.0	0.80	ug/L	10/27/2011 2057
2-Butanone (MEK)	ND		1	10	2.0	ug/L	10/27/2011 2057
Carbon disulfide	0.49	J	1	1.0	0.097	ug/L	10/27/2011 2057
Carbon tetrachloride	ND		1	1.0	0.14	ug/L	10/27/2011 2057
Chlorobenzene	ND		1	2.0	0.33	ug/L	10/27/2011 2057
Chloroethane	ND		1	2.0	0.47	ug/L	10/27/2011 2057
Chloroform	ND		1	1.0	0.33	ug/L	10/27/2011 2057
Chloromethane (Methyl chloride)	ND		1	1.0	0.35	ug/L	10/27/2011 2057
Dibromochloromethane	ND		1	1.0	0.33	ug/L	10/27/2011 2057
1,2-Dichlorobenzene	ND		1	1.0	0.33	ug/L	10/27/2011 2057
1,3-Dichlorobenzene	ND		1	1.0	0.33	ug/L	10/27/2011 2057
1,4-Dichlorobenzene	ND		1	1.0	0.33	ug/L	10/27/2011 2057
1,1-Dichloroethane	ND		1	1.0	0.13	ug/L	10/27/2011 2057
1,2-Dichloroethane	ND		1	1.0	0.15	ug/L	10/27/2011 2057
1,1-Dichloroethene	ND		1	1.0	0.16	ug/L	10/27/2011 2057
cis-1,2-Dichloroethene	ND		1	1.0	0.12	ug/L	10/27/2011 2057
trans-1,2-Dichloroethene	ND		1	1.0	0.21	ug/L	10/27/2011 2057
1,2-Dichloropropane	ND		1	1.0	0.19	ug/L	10/27/2011 2057
cis-1,3-Dichloropropene	ND		1	1.0	0.092	ug/L	10/27/2011 2057
trans-1,3-Dichloropropene	ND		1	1.0	0.11	ug/L	10/27/2011 2057
Ethylbenzene	ND		1	1.0	0.33	ug/L	10/27/2011 2057
2-Hexanone	ND		1	10	0.27	ug/L	10/27/2011 2057
Methyl tertiary butyl ether (MTBE)	ND		1	1.0	0.40	ug/L	10/27/2011 2057
4-Methyl-2-pentanone	ND		1	10	0.31	ug/L	10/27/2011 2057
Methylene chloride	ND		1	1.0	0.33	ug/L	10/27/2011 2057
Styrene	ND		1	1.0	0.12	ug/L	10/27/2011 2057
1,1,2,2-Tetrachloroethane	ND		1	1.0	0.16	ug/L	10/27/2011 2057
Tetrachloroethene	ND		1	1.0	0.13	ug/L	10/27/2011 2057
Toluene	ND		1	1.0	0.33	ug/L	10/27/2011 2057
1,2,4-Trichlorobenzene	ND		1	1.0	0.51	ug/L	10/27/2011 2057
1,1,1-Trichloroethane	ND		1	1.0	0.074	ug/L	10/27/2011 2057
1,1,2-Trichloroethane	ND		1	1.0	0.21	ug/L	10/27/2011 2057
Trichloroethene	ND		1	1.0	0.18	ug/L	10/27/2011 2057
Vinyl chloride	ND		1	1.0	0.054	ug/L	10/27/2011 2057
Xylenes (total)	ND		1	1.0	0.33	ug/L	10/27/2011 2057

Surrogate	Q	% Rec	Acceptance Limit
Bromofluorobenzene		94	70-130
1,2-Dichloroethane-d4		99	70-130
Toluene-d8		99	70-130

PQL = Practical quantitation limit
ND = Not detected at or above the MDL
P = The RPD between two GC columns exceeds 40%
J = Estimated result < PQL and ≥ MDL
N - Recovery is out of criteria
+ - RPD is out of criteria

Where applicable, all soil sample analysis are reported on a dry weight basis unless flagged with a "W"

Note: Calculations are performed before rounding to avoid round-off errors in calculated results

Volatile Organic Compounds by GC/MS - LCS

Sample ID: MQ70599-002
Batch: 70599
Analytical Method: 8260B

Matrix: Aqueous
Prep Method: 5030B

Parameter	Spike Amount (ug/L)	Result (ug/L)	Q	Dil	% Rec	% Rec Limit	Analysis Date
Acetone	100	98		1	98	70-130	10/27/2011 1911
Benzene	50	46		1	92	70-130	10/27/2011 1911
Bromodichloromethane	50	46		1	92	70-130	10/27/2011 1911
Bromoform	50	45		1	91	70-130	10/27/2011 1911
Bromomethane (Methyl bromide)	50	57		1	114	60-140	10/27/2011 1911
2-Butanone (MEK)	100	97		1	97	60-140	10/27/2011 1911
Carbon disulfide	50	49		1	97	60-140	10/27/2011 1911
Carbon tetrachloride	50	44		1	87	70-130	10/27/2011 1911
Chlorobenzene	50	48		1	96	70-130	10/27/2011 1911
Chloroethane	50	48		1	97	42-163	10/27/2011 1911
Chloroform	50	42		1	83	70-130	10/27/2011 1911
Chloromethane (Methyl chloride)	50	54		1	109	70-130	10/27/2011 1911
Dibromochloromethane	50	44		1	89	70-130	10/27/2011 1911
1,2-Dichlorobenzene	50	49		1	97	70-130	10/27/2011 1911
1,3-Dichlorobenzene	50	46		1	93	70-130	10/27/2011 1911
1,4-Dichlorobenzene	50	46		1	91	70-130	10/27/2011 1911
1,1-Dichloroethane	50	46		1	91	70-130	10/27/2011 1911
1,2-Dichloroethane	50	47		1	94	70-130	10/27/2011 1911
1,1-Dichloroethene	50	45		1	91	70-130	10/27/2011 1911
cis-1,2-Dichloroethene	50	45		1	90	70-130	10/27/2011 1911
trans-1,2-Dichloroethene	50	46		1	92	70-130	10/27/2011 1911
1,2-Dichloropropane	50	47		1	94	70-130	10/27/2011 1911
cis-1,3-Dichloropropene	50	48		1	96	70-130	10/27/2011 1911
trans-1,3-Dichloropropene	50	48		1	97	70-130	10/27/2011 1911
Ethylbenzene	50	49		1	98	70-130	10/27/2011 1911
2-Hexanone	100	99		1	99	60-140	10/27/2011 1911
Methyl tertiary butyl ether (MTBE)	50	45		1	89	70-130	10/27/2011 1911
4-Methyl-2-pentanone	100	100		1	102	60-140	10/27/2011 1911
Methylene chloride	50	44		1	88	70-130	10/27/2011 1911
Styrene	50	53		1	105	70-130	10/27/2011 1911
1,1,2,2-Tetrachloroethane	50	47		1	94	60-140	10/27/2011 1911
Tetrachloroethene	50	46		1	92	70-130	10/27/2011 1911
Toluene	50	46		1	93	70-130	10/27/2011 1911
1,2,4-Trichlorobenzene	50	50		1	100	70-130	10/27/2011 1911
1,1,1-Trichloroethane	50	44		1	88	70-130	10/27/2011 1911
1,1,2-Trichloroethane	50	48		1	96	70-130	10/27/2011 1911
Trichloroethene	50	46		1	92	70-130	10/27/2011 1911
Vinyl chloride	50	49		1	98	70-130	10/27/2011 1911
Xylenes (total)	100	95		1	95	70-130	10/27/2011 1911

Surrogate	Q	% Rec	Acceptance Limit
Bromofluorobenzene		97	70-130
1,2-Dichloroethane-d4		98	70-130
Toluene-d8		99	70-130

PQL = Practical quantitation limit
ND = Not detected at or above the MDL
P = The RPD between two GC columns exceeds 40%
J = Estimated result < PQL and ≥ MDL
N - Recovery is out of criteria
+ - RPD is out of criteria

Where applicable, all soil sample analysis are reported on a dry weight basis unless flagged with a "W"

Note: Calculations are performed before rounding to avoid round-off errors in calculated results

SHEALY ENVIRONMENTAL SERVICES, INC.

Shealy Environmental Services, Inc.
106 Vantage Point Drive
West Columbia, South Carolina 29172
Telephone No. (803) 791-9700 Fax No. (803) 791-9111
www.shealylab.com

SHEALY

CWA / NPDES
Chain of Custody Record

Number 06208

Client: Arcadis	Report to Contact: Shelley.Gibbons@arcadis-us.com	Sampler (Printed Name): Chris Tisdale - Arcadis	Quote No. 14192
Address: 1000 Cobb Place Blvd., Bldg 500-A	Telephone No. / Fax No. / Email: 919-854-5554	Field Parameters (i.e., pH, temp, DO) can be recorded in check boxes	Page 1 of 1
City: Kennesaw; State: GA; Zip Code: 30144	Preservative: 1. Unpres. 2. NaOH/ZnA 3. H2SO4 4. HNO3 5. HCL 6. Na Thio. 7. NaOH		
Project Name: Ft Stewart - FST-39			
Project Number: GP09HAFS2 F39A			

Sample ID / Description (Containers for each sample may be combined on one line)	Date 10/25 Yr. 2011	Time 24-HOUR	G=Grab C=Composite	Collection Sample Temp °C	Matrix (GW) WW DW S	Analysis: VOC's	Remarks / Cooler ID
G4MW058 (10252011)	Start 1340 / Finish 1425	(1425)	G	26.78		X	
Trip Blank	Start / Finish					X	
	Start / Finish						
	Start / Finish						
	Start / Finish						

Number of Containers: 3
Bottle (See Instructions on back): A
Preservative: 5
Lot No.: B123901VB
MJ27027

Turn Around Time Required (Prior lab approval required for expedited TAT): X Standard ☐ Rush (Please Specify)

Sample Disposal: ☐ Return to Client X Disposal by Lab

QC Requirements (Specify):

Possible Hazard Identification: ☐ Non-Hazard ☐ Flammable ☐ Skin Irritant ☐ Poison X Unknown

	Date	Time		Date	Time
1. Relinquished by / Sampler: Chris Tisdale	10/26/11	0930	1. Received by		
2. Relinquished by			2. Received by		
3. Relinquished by			3. Received by		
4. Relinquished by: FedEx	10/27/11	0900	4. Laboratory Received by:	10/27/11	0910

Note: All samples are retained for six weeks from receipt unless other arrangements are made.

LAB USE ONLY
Received on Ice (Check) ☐ Yes ☐ No ☐ Ice Pack
Receipt Temp: 1-8 °C
Temp. Blank ☐ Y ☐ N

Shealy Environmental Services, Inc.
Document Number: F-AD-016
Revision Number: 9

Replaces Date: 05/06/11
Effective Date: 10/11/11

Sample Receipt Checklist (SRC)

Client: Arcadis Cooler Inspected by/date: GC 10/27/11 Lot #: M12027

Means of receipt: ☐ SESI ☐ Client ☐ UPS ☑ FedEx ☐ Airborne Exp ☐ Other

Yes ☑	No ☐		1. Were custody seals present on the cooler?
Yes ☑	No ☐		2. If custody seals were present, were they intact and unbroken?

Cooler ID/temperature upon receipt 1 - 8 °C ___ / ___ °C ___ / ___ °C ___ / ___ °C
Method: ☐ Temperature Blank ☑ Against Bottles
Method of coolant: ☑ Wet Ice ☐ Blue Ice ☐ Dry Ice ☐ None

If response is No (or Yes for 14, 15, 16), an explanation/resolution must be provided.

Yes ☐	No ☐	NA ☑	3. If temperature of any cooler exceeded 6.0°C, was Project Manager notified? PM notified by SRC, phone, note (circle one), other:_____. (For coolers received via commercial courier, PMs are to be notified immediately.
Yes ☑	No ☐	NA ☐	4. Is the commercial courier's packing slip attached to this form?
Yes ☑	No ☐		5. Were proper custody procedures (relinquished/received) followed?
Yes ☐	No ☑	NA ☐	5a Were samples relinquished by client to commercial courier?
Yes ☑	No ☐		6. Were sample IDs listed?
Yes ☑	No ☐		7. Was collection date & time listed?
Yes ☑	No ☐		8. Were tests to be performed listed on the COC?
Yes ☑	No ☐		9. Did all samples arrive in the proper containers for each test?
Yes ☑	No ☐		10. Did all container label information (ID, date, time) agree with COC?
Yes ☑	No ☐		11. Did all containers arrive in good condition (unbroken, lids on, etc.)?
Yes ☑	No ☐		12. Was adequate sample volume available?
Yes ☑	No ☐		13. Were all samples received within ½ the holding time or 48 hours, whichever comes first?
Yes ☐	No ☑		14. Were any samples containers missing?
Yes ☐	No ☑		15. Were there any excess samples not listed on COC?
Yes ☐	No ☑	NA ☐	16. Were bubbles present >"pea-size" (¼"or 6mm in diameter) in any VOA vials?
Yes ☐	No ☐	NA ☑	17. Were all metals/O&G/HEM/nutrient samples received at a pH of <2?
Yes ☐	No ☐	NA ☑	18. Were all cyanide and/or sulfide samples received at a pH >12?
Yes ☐	No ☐	NA ☑	19. Were all applicable NH3/TKN/cyanide/phenol/BNA/pest/PCB/herb (<0.2mg/L) samples free of residual chlorine?
Yes ☐	No ☐	NA ☑	20. Were collection temperatures documented on the COC for NC samples?
Yes ☐	No ☐	NA ☑	21. Were client remarks/requests (i.e. requested dilutions, MS/MSD designations, etc…) correctly transcribed from the COC into the comment section in LIMS?

Sample Preservation (Must be completed for any sample(s) incorrectly preserved or with headspace.)

Sample(s)_____ were received incorrectly preserved and were adjusted accordingly in sample receiving with _____ (H_2SO_4,HNO_3,HCl,NaOH) with the SR # (number) _____.

Sample(s)_____ were received with bubbles >6 mm in diameter

Sample(s)_____

TKN/cyanide/BNA/pest/PCB/herb.

Corrective Action taken, if necessary:

Was client notified: Yes ☐ No ☐

SESI employee: _____

Comments: _____

This portion can be removed for Recipient's records

FedEx Tracking Number 863926250961

Date 10/26/11

Sender's Name Chris Tatale Phone 312-922-

Company Arcadis

Address 1000 Cable Place Blvd. Bldg 500 A

City Kennesaw State GA ZIP 30144

Your Internal Billing Reference GP09HAES F39A

HUNTER STEWART
ELECTRONIC VALIDATION REVIEW REPORT
SDGs: LC13017, LC17068, LC20005, LD01022, LD09009, LD09018 and LD14020
FST-39

Analytical data were evaluated in accordance with applicable USEPA SW-846 method requirements, "USEPA Contract Laboratory Program National Functional Guidelines for Organic Data Review" (October 1999), analytical method control criteria, the analytical laboratory Quality Assurance Control Limits, the Fort Stewart Military Reservation and Hunter Army Airfield Quality Assurance Project Plan (ARCADIS-2008), and professional judgment.

The data review summarized in this report includes a review of all sample collection documentation and the electronic data validation of the analytical data housed in the project database. Sample collection documentation included sample collection logs and chains of custody. The electronic data validation was performed utilizing the EQuIS Data Qualification Module (DQM). DQM checks for the following parameters:

- Holding times and preservation;
- Blank contamination;
    1. Method blanks,
    2. Trip blanks,
    3. Equipment blanks;
- Matrix spike and Duplicate sample recovery;
- Matrix Spike and Matrix Spike Duplicate relative percent differences;
- Laboratory Control Sample and Duplicate recovery;
- Laboratory Control Sample and Duplicate relative percent differences;
- Surrogate recovery (organic analyses only); and
- Field duplicate relative percent difference.

Manual review was performed for the following items:

- Sample dilutions and reporting limits;
- Case Narratives; and
- Laboratory Duplicates

Data was generated by Shealy Environmental Services, Inc. – West Columbia, South Carolina and Test America – Savannah Laboratories. Data qualifiers were applied electronically to the database with any additional qualifiers added manually. A summary of the data as amended by data qualifiers is included with the original hard copy reports.

The attached table summarizes the data that were qualified due to QC deficiencies. The table indicates compounds/analytes qualified based on electronic and manual validation. Refer to the associated method section of the validation checklist for a detailed explanation of qualification. All other data in these SDGs are considered usable as reported.

HUNTER STEWART
ELECTRONIC VALIDATION REVIEW REPORT
SDGs: LC13017, LC17068, LC20005, LD01022, LD09009, LD09018 and LD14020
FST-39

The following list of data qualifiers and definitions were applied in accordance with qualification criteria defined in the greater than guidance documents:

UB Compound/analyte detected in blank or associated blank, qualified as a non-detect at listed value.

J The analyte was positively identified, but the associated numerical value is the approximate concentration of the analyte in the sample.

UJ The analyte was not detected greater than the reporting limit; however, the reported quantitation limit is approximate and may, or may not represent the actual limit of quantitation necessary to accurately and precisely measure analyte in the sample.

R The sample result is rejected due to serious deficiencies in the ability to analyze the sample and meet quality control criteria; and the presence or absence of the analyte cannot be verified.

U Not detected at the quantitative reporting limit

DQM RUN BY:	Rachelle Borne	06/15/10
REVIEW PERFORMED BY:	Rachelle Borne	06/15/10
SIGNATURE:	Rachelle Borne	06/16/10
PEER REVIEW:	Dennis Capria	06/21/10

HUNTER STEWART
ELECTRONIC VALIDATION REVIEW REPORT
SDGs: LC13017, LC17068, LC20005, LD01022, LD09009, LD09018 and LD14020
FST-39

The following samples were included in this SDG:

SDG	Sample ID	Sample Date	Parent Sample
LC13017	DUP-5 (031110)	3/11/2010	G4MW027 (031110)
LC13017	G4MW006 (031210)	3/12/2010	
LC13017	G4MW010 (031210)	3/12/2010	
LC13017	G4MW011 (031110)	3/11/2010	
LC13017	G4MW016 (031010)	3/10/2010	
LC13017	G4MW017 (031010)	3/10/2010	
LC13017	G4MW018 (031210)	3/12/2010	
LC13017	G4MW019 (031010)	3/10/2010	
LC13017	G4MW020 (031010)	3/10/2010	
LC13017	G4MW023 (031010)	3/10/2010	
LC13017	G4MW024 (031010)	3/10/2010	
LC13017	G4MW025 (031010)	3/10/2010	
LC13017	G4MW027 (031110)	3/11/2010	
LC13017	G4MW028 (031110)	3/11/2010	
LC13017	G4MW029 (031110)	3/11/2010	
LC13017	G4MW031 (031010)	3/10/2010	
LC13017	TRIP BLANK (031010)	3/12/2010	
LC17068	DUP-2 (031810)	3/18/2010	F39SB008 (4-5)
LC17068	F39SB001 (4.5-5.5)	3/15/2010	
LC17068	F39SB002 (4-5)	3/18/2010	
LC17068	F39SB003 (4-5)	3/15/2010	
LC17068	F39SB004 (4-5)	3/15/2010	
LC17068	F39SB005 (4-5)	3/15/2010	
LC17068	F39SB006 (4-5)	3/15/2010	
LC17068	F39SB007 (4-5)	3/15/2010	
LC17068	F39SB008 (4-5)	3/18/2010	
LC17068	F39SB009 (0.5-1)	3/15/2010	
LC17068	F39SB009 (3.0-3.5)	3/15/2010	
LC17068	F39SB010 (0.5-1.0)	3/16/2010	
LC17068	F39SB010 (3.0-3.5)	3/16/2010	
LC17068	F39SB011 (0.5-1.0)	3/16/2010	
LC17068	F39SB011 (3.0-3.5)	3/16/2010	
LC17068	F39SB012 (0.5-1.0)	3/16/2010	
LC17068	F39SB012 (3.0-3.5)	3/16/2010	
LC17068	TRIP BLANK (031610)	3/17/2010	
LC20005	Trip Blank (031810)	3/20/2010	
LC20005	F39TW01 (40-45)	3/18/2010	
LD01022	DUP-3 (033010)	3/30/2010	F39TW02 (20-25)
LD01022	F39TW01 (10-15)	3/31/2010	
LD01022	F39TW01 (20-25)	3/30/2010	
LD01022	F39TW01 (30-35)	3/30/2010	
LD01022	F39TW02 (10-15)	3/30/2010	

HUNTER STEWART
ELECTRONIC VALIDATION REVIEW REPORT
SDGs: LC13017, LC17068, LC20005, LD01022, LD09009, LD09018 and LD14020
FST-39

SDG	Sample ID	Sample Date	Parent Sample
LD01022	F39TW02 (20-25)	3/30/2010	
LD01022	F39TW02 (30-35)	3/30/2010	
LD01022	F39TW02 (40-45)	3/30/2010	
LD01022	F39TW03 (10-15)	3/31/2010	
LD01022	F39TW03 (20-25)	3/31/2010	
LD01022	F39TW03 (30-35)	3/31/2010	
LD01022	F39TW03 (40-45)	3/31/2010	
LD01022	F39TW04 (10-15)	4/1/2010	
LD01022	F39TW04 (20-25)	4/1/2010	
LD01022	F39TW04 (30-35)	4/1/2010	
LD01022	F39TW04 (40-45)	4/1/2010	
LD01022	TRIP BLANK (033110)	4/1/2010	
LD01022	Trip Blank (040110)	4/6/2010	
LD09009	G4MW033 (040710)	4/7/2010	
LD09009	G4MW034 (040610)	4/6/2010	
LD09009	G4MW035 (040610)	4/6/2010	
LD09009	G4MW036 (040610)	4/6/2010	
LD09009	Trip Blank (040810)	4/8/2010	
LD09018	F39SED08 (040810)	4/8/2010	
LD09018	F39SW-01 (040810)	4/8/2010	
LD09018	F39SW-02 (040810)	4/8/2010	
LD09018	F39SW-03 (040810)	4/8/2010	
LD09018	F39SW-04 (040810)	4/8/2010	
LD09018	F39SW-05 (040810)	4/8/2010	
LD09018	F39SW-06 (040810)	4/8/2010	
LD09018	F39SW-07 (040810)	4/8/2010	
LD09018	F39TW05 (10-15)	4/5/2010	
LD09018	F39TW05 (20-25)	4/6/2010	
LD09018	F39TW05 (30-35)	4/6/2010	
LD09018	F39TW05 (40-45)	4/5/2010	
LD09018	F39TW06 (10-15)	4/6/2010	
LD09018	F39TW06 (20-25)	4/7/2010	
LD09018	F39TW06 (30-35)	4/7/2010	
LD09018	F39TW06 (40-45)	4/6/2010	
LD09018	F39TW07 (10-15)	4/7/2010	
LD09018	F39TW07 (20-25)	4/8/2010	
LD09018	F39TW07 (30-35)	4/8/2010	
LD09018	F39TW07 (40-45)	4/7/2010	
LD09018	F39TW08 (10-15)	4/8/2010	
LD09018	F39TW08 (20-25)	4/8/2010	
LD09018	F39TW08 (30-35)	4/8/2010	
LD09018	F39TW08 (40-45)	4/8/2010	
LD09018	TRIP BLANK (040910)	4/9/2010	

HUNTER STEWART
ELECTRONIC VALIDATION REVIEW REPORT
SDGs: LC13017, LC17068, LC20005, LD01022, LD09009, LD09018 and LD14020
FST-39

SDG	Sample ID	Sample Date	Parent Sample
LD09018	DUP01 (040810)	4/8/2010	F39SW-01 (040810)
LD09018	DUP-4 (040710)	4/7/2010	F39TW06 (30-35)
LD09018	F39SED01 (040810)	4/8/2010	
LD09018	F39SED02 (040810)	4/8/2010	
LD09018	F39SED03 (040810)	4/8/2010	
LD09018	F39SED04 (040810)	4/8/2010	
LD09018	F39SED05 (040810)	4/8/2010	
LD09018	F39SED06 (040810)	4/8/2010	
LD09018	F39SED07 (040810)	4/8/2010	
LD14020	F39TW09 (10-15)	4/12/2010	
LD14020	F39TW09 (20-25)	4/12/2010	
LD14020	F39TW09 (30-35)	4/12/2010	
LD14020	F39TW09 (40-45)	4/12/2010	
LD14020	F39TW10 (10-15)	4/13/2010	
LD14020	F39TW10 (20-25)	4/13/2010	
LD14020	F39TW10 (30-35)	4/13/2010	
LD14020	F39TW10 (40-45)	4/13/2010	
LD14020	F39TW11 (10-15)	4/14/2010	
LD14020	F39TW11 (20-25)	4/14/2010	
LD14020	F39TW11 (30-35)	4/14/2010	
LD14020	F39TW11 (40-45)	4/14/2010	
LD14020	F39TW12 (10-15)	4/14/2010	
LD14020	F39TW12 (20-25)	4/14/2010	
LD14020	F39TW12 (30-35)	4/14/2010	
LD14020	F39TW12 (40-45)	4/14/2010	
LD14020	Trip Blank (041410)	4/14/2010	

HUNTER STEWART
ELECTRONIC VALIDATION REVIEW REPORT
SDGs: LC13017, LC17068, LC20005, LD01022, LD09009, LD09018 and LD14020
FST-39

ANALYTICAL DATA PACKAGE DOCUMENTATION

GENERAL INFORMATION

Items Reviewed	Reported		Performance Acceptable		Not Required
	No	Yes	No	Yes	
1. Sample results		X		X	
2. Parameters analyzed		X		X	
3. Methods of analysis		X		X	
4. Reporting limits of analysis		X		X	
5. Master tracking list		X		X	
6. Sample collection date		X		X	
7. Laboratory sample received date		X		X	
8. Sample preparation/extraction date		X		X	
9. Sample analysis date		X		X	
10. Copy of chain-of-custody form signed by lab sample custodian		X		X	
11. Narrative summary of QA or sample problems provided		X		X	
12. Laboratory Signature		X		X	
13. South Carolina Certification Number		X		X	

QA - quality assurance

The analytical report was complete with the following exceptions or notations.

Note: The laboratory reported values between the quantitative reporting limit and the method detection limit as estimated concentrations. The "J" qualifier was retained in this validation. Non-detect values are reported at the quantitative reporting limit.

VOLATILE ORGANIC COMPOUNDS

Items Reviewed	DQM Deficiency		Qualification Applied	
	No	Yes	No	Yes
1. Holding times/Preservation	DQM		DQM	
2. Reporting limits	M		M	
3. Blanks				
A. Method blanks		DQM		DQM
B. Equipment blanks	NA		NA	
C. Trip blanks		DQM		DQM
4. Surrogate spike recoveries	DQM		DQM	
5. Laboratory control sample (LCS) A. LCS %R		DQM		DQM
B. LCS duplicate (LCSD) %R		DQM		DQM
C. LCS/LCSD RPD		DQM		DQM
6. Matrix spike (MS)				
A. MS %R		DQM		DQM
B. MS duplicate (MSD) %R		DQM		DQM
C. MS/MSD precision (RPD)		DQM		DQM
7. Field Duplicate precision (RPD)		DQM		DQM

M – Manual Review %R - percent recovery RPD - relative percent difference DQM – Data Qualification Module

Comments:
This section presents a discussion of any additions or changes to the electronic data validation for compounds analyzed by Method 8260B.

2. SDG (LD09018) Several samples required dilutions due to elevated concentrations of target analytes. There were elevated reporting limits for non-detect results.

3A. SDG (LC17068) The compound carbon disulfide was detected in the method blank for batch 3000. The associated field samples were non-detect for this compound; therefore, qualification of the data is not warranted.

SDG (LC20005) The compound carbon disulfide was detected in the method blank. The associated field samples were qualified as non-detect for carbon disulfide if the sample concentration was less than five times the blank value.

SDG (LD01022) The compound methylene chloride was detected in the method blank for batches 30893, 30899 and 31061. The associated field samples were qualified as non-detect for this compound if the sample concentration was less than ten times the blank result.

SDG (LD09009) The compound methylene chloride was detected in the method blank. The associated field samples were qualified as non-detect for this compound if the sample concentration was less than ten times the blank result.

SDG (LD09018) The compound methylene chloride was detected in the method blank for batches 31466 and 31526. The associated field samples were qualified as non-detect for this compound if the sample concentration was less than ten times the blank result.

SDG (LD09018) The compound 2-hexanone was detected in the method blank for batch 31760. The associated field samples were non-detect for this compound; therefore, qualification of the data is not warranted.

SDG (LD14020) The compound methylene chloride was detected in the method blank for batch 31703. The associated field samples were qualified as non-detect for this compound if the sample concentration was less than ten times the blank result.

SDG (LD14020) The compound acetone was detected in the method blank for batch 31987. The associated field samples were qualified as non-detect for this compound if the sample concentration was less than ten times the blank result.

3C. SDGs (LC17068 and LC13017) The compound acetone was detected in the trip blank. The associated field samples were qualified as non-detect for acetone if the sample concentration was less than ten times the blank value.

SDG (LC20005) The compounds acetone and carbon disulfide were detected in the trip blank. The associated field sample was qualified as non-detect for these compounds if the sample concentration was less than five times the blank value for carbon disulfide and less than ten times the blank value for acetone.

SDG (LD01022) The compounds acetone and carbon disulfide were detected in Trip Blank (033110). The associated field sample was qualified as non-detect for these compounds if the sample concentration was less than five times the blank value for carbon disulfide and less than ten times the blank value for acetone.

SDG (LD01022) The compound methylene chloride was detected in Trip Blank(040110). The associated field sample were qualified as non-detect for this compound if the sample concentration was less than ten times the blank result.

SDG (LD09009) The compounds acetone and methylene chloride were detected in the trip blank. The associated field samples were qualified as non-detect for these compounds if the sample result was less than ten times the blank result.

SDG (LD09018) The compounds acetone and methylene chloride were detected in the trip blanks. The associated field samples were qualified as non-detect for these compounds if the sample result was less than ten times the blank result.

SDG (LD14020) The compounds acetone, methylene chloride, carbon disulfide and vinyl chloride were detected in one or more of the trip blanks. The associated field samples were qualified as non-detect for these compounds if the sample result was less than ten times the blank result for methylene chloride and acetone and less than five times the blank result for carbon disulfide and vinyl chloride.

5. SDG (LC17068) The RPDs between the LCS/LCSD pair were above the control limit for several compounds for batch 29863. The associated field samples were qualified as estimated for these compounds. See the attached qualification summary for details of the qualifications.

SDG (LC17068) The recovery of the compound bromoform was below the control limit in the LCS for batch 29887. The associated field samples were qualified as estimated for bromoform.

SDG (LC17068) The recovery of chloroethane was above the control limit in the LCSD for batch 29942. The associated field samples were non-detect for this compound; therefore, qualification of the data is not warranted. The RPDs between the LCS/LCSD pair were above the control limit for the compounds acetone and chloroethane. The associated field samples were qualified as estimated for these compounds.

SDG (LC17068) The RPD between the LCS/LCDS pair was above the control limit for the compound trichlorofluoromethane. The associated field samples were qualified as estimated for this compound.

SDG (LC17068) The recoveries of the compounds acetone, methyl acetate and 4-methyl-2-pentanone were above the control limit in the LCSD for batch 30086. All detections of these compounds in the associated field samples were qualified as estimated. The RPDs between the LCS/LCSD pair were above the control limit for acetone, 2-butanone, 2-hexanone, methyl acetate and 4-methyl-2-pentanone. The associated field samples were qualified as estimated for these compounds.

SDG (LC17068) The recovery of the compounds acetone, carbon disulfide, methyl acetate and methyl tertiary butyl ether were above the control limit in the LCS and/or the LCSD for batch 30124. All detections of these compounds in the associated field samples were qualified as estimated. The RPDs between the LCS/LCSD pair were above the control limit for acetone and chloroethane. The associated field samples were qualified as estimated for these compounds.

SDG (LC20005) The RPDs between the LCS/LCSD pair were above the control limit trichlorofluoromethane. The associated field samples were qualified as estimated for this compound.

SDG (LD01022) The recovery of the compound 1,2,4-trichlorobenzene was above the control limit in the LCSD for batch 30893. The associated field samples were non-detect for this compound; therefore, qualification of the data is not warranted.

SDG (LD01022) The recovery of the compound 1,2-dibromo-3-chloropropane was below the control limit in the LCSD for batch 30897. The associated field samples were qualified as estimated for this compound.

SDG (LD01022) The RPD between the LCS/LCSD pair was above the control limit for bromomethane. The associated field samples were qualified as estimated for this compound.

SDG (LD09018) The RPD between the LCS/LCSD pair was above the control limit for bromomethane. The associated field samples were qualified as estimated for this compound.

6. SDG (LD01022) Sample location F39TW01(20-25) was used as the MS/MSD. Several recoveries were outside the control limit in the MS and the MSD. Several RPDs were greater than the control limit. The parent sample was qualified as estimated for these compounds. See the attached qualification summary for details of the qualifications.

   SDG (LD14020) Sample location F39TW09(30-35) was used as the MS/MSD. Several recoveries were outside the control limit in the MS and the MSD. Several RPDs were greater than the control limit. The parent sample was qualified as estimated for these compounds. See the attached qualification summary for details of the qualifications.

7. SDG (LC13017) Sample location DUP-5(031110) was collected as a field duplicate of G4MW027(031110). The RPDs were acceptable at less than 40%.

SDG (LC17068) Sample location DUP-2(031810) was collected as a field duplicate of F39SB008(4-5). The RPDs were acceptable at less than 40%.

SDG (LD01022) Sample location DUP-3(033010) was collected as a field duplicate of F39TW02(20-25). The RPDs were acceptable at less than 40%.

SDG (LD09018) Sample location DUP-4(040710) was collected as a field duplicate of F39TW06(30-35). The RPDs were acceptable at less than 40%.

SDG (LD09018) Sample location DUP01(040810) was collected as a field duplicate of F39SW-01(040810). The RPD for trichloroethene was above the 40% control limit. The parent and the duplicate were qualified as estimated for this compound.

HUNTER STEWART
ELECTRONIC VALIDATION REVIEW REPORT
SDGs: LC13017, LC17068, LC20005, LD01022, LD09009, LD09018 and LD14020
FST-39

SEMIVOLATILE ORGANIC COMPOUNDS

Items Reviewed	DQM Deficiency		Qualification Applied	
	No	Yes	No	Yes
1. Holding times/Preservation		DQM		DQM
2. Reporting limits	M		M	
3. Blanks				
A. Method blanks	DQM		DQM	
B. Equipment blanks	NA		NA	
4. Surrogate spike recoveries		DQM		DQM
5. Laboratory control sample (LCS) A. LCS %R		DQM		DQM
B. LCS duplicate (LCSD) %R	DQM		DQM	
C. LCS/LCSD RPD	DQM		DQM	
6. Matrix spike (MS)				
A. MS %R		DQM		DQM
B. MS duplicate (MSD) %R		DQM		DQM
C. MS/MSD precision (RPD)		DQM		DQM
7. Field Duplicate precision (RPD)	DQM		DQM	

M – Manual Review %R - percent recovery RPD - relative percent difference DQM – Data Qualification Module

Comments:
This section presents a discussion of any additions or changes to the electronic data validation for compounds analyzed by Method 8270D.

1. SDG (LD14020) Sample location F39TW10(40-45) was extracted 6 days beyond the recommended seven day holding time. Sample locations F39TW11(40-45) and F39TW12(40-45) were analyzed five days beyond the recommened seven day holding time. All SVOC results for these samples were qualified as estimated.

2. SDG (LC17068) Several samples were analyzed at 2x dilutions due to the viscosity of the sample. There were elevated reporting limits for non-detect results.

4. SDG (LD01022) One surrogate recovery was below the control limit in F39TW02(40-45). Only one surrogate recovery was outside the control limit. No qualification is necessary.

   SDG (LD01022) One base-neutral surrogate recovery was less than 10% in F39TW03(40-45). The sample was re-analyzed outside the 7 day holding time with similar results. The initial analysis will be used for reporting purposes for the acid compounds. The re-analysis will be used for the base-neutral compounds. All base-neutral compounds for this sample were qualified as rejected.

   SDG (LD09018) Two base-neutral surrogate recoveries were less than ten percent in the initial analysis of F39TW06(40-45). The sample was re-extracted 5 days beyond the 7 day recommended holding time. The surrogate recoveries were acceptable in the re-analysis. The initial analysis will be used for reporting the acid compounds. The re-analysis will be used for reporting purposes for the base neutral compounds. All base neutral compounds were qualified as estimated.

   SDG (LD09018) Two base neutral surrogate exhibited recoveries less than ten percent in the initial analysis of F39TW08(30-35). The sample was re-extracted 3 days beyond the 7 day recommended

holding time. The surrogate recoveries were acceptable in the re-analysis. The acid compounds will be reported with no qualification from the original analyses since the acid surrogates exhibited acceptable recoveries. The base-neutral compounds will be reported from the re-analysis and all base-neutral compounds were qualified as estimated.

SDG (LD09018) One base-neutral surrogate exhibited a recovery less than ten percent in the initial and re-analysis for sample F39TW08(40-45). The re-analysis will be used for reporting purposes and all base-neutral compounds will be qualified as rejected.

SDG (LD14020) One base-neutral surrogate recovery was less than ten percent in sample locations F39TW09(30-35) and F39TW12(40-45). All base neutral compounds for this sample were qualified as rejected.

SDG (LD14020) One surrogate recovery was below the control limit in F39TW10(40-45). Only one surrogate was outside the control limit; therefore, no qualification is necessary.

5. SDG (LC20005) The recovery of the compound 4-chloroaniline was below the control limit in the LCS. The RPD between the LCS/LCSD pair was greater than the control limit for 4-chloroaniline. The associated field samples were qualified as estimated for this compound.

   SDG (LD01022) The recovery of carbazole was above the control limit in the LCS for batch 30843. The associated field samples were non-detect for this compound; therefore, qualification of the data was not warranted.

   SDG (LD09018) The recoveries of several compounds were less than the control limit in the LCS for batch 30326. The associated field samples were qualified as estimated for these compounds. Please see the attached qualification summary for details of the qualifications.

6. SDG (LC17068) Sample location F39SB001(4.5-5.5) was used as the MS/MSD. The RPDs between the MS/MSD pair were greater than the control limit for bis(2-chloroethyl)ether, bis(2-chloroisopropyl)ether, 2-chlorophenol, 2-methylphenol and nitrobenzene. The parent sample was qualified as estimated for these compounds.

   SDG (LD01022) Sample location F39TW01(20-25) was used as the MS/MSD. Several recoveries were outside the control limit in the MS and the MSD. The parent sample was qualified as estimated for these compounds when applicable. The recovery of benzo(g,h,i)perylene was less than ten percent in the MS. The parent sample was qualified as rejected for this compound. See the attached qualification summary for details of the qualifications.

   SDG (LD09009) Sample location G4MW034(040610) was used as the MS/MSD. Several recoveries were outside the control limit in the MS and the MSD. The parent sample was qualified as estimated for these compounds when applicable. The recoveries of 4-chloroaniline, 3-nitroaniline and 4-nitroaniline were less than ten percent in the MSD. The parent sample was qualified as rejected for these compounds. The RPDs between the MS/MSD pair were greater than the control limit for several compounds. The parent sample was qualified as estimated for these compounds. See the attached qualification summary for details of the qualifications.

   SDG (LD09018) Sample location F39SW-01(040810) was used as the MS/MSD. Several recoveries were outside the control limit in the MS and the MSD. The parent sample was qualified as estimated for these compounds when applicable. The recoveries of 4-chloroaniline and 3-nitroaniline were less than ten percent in the MS. The parent sample was qualified as rejected for these compounds. The RPDs

between the MS/MSD pair were greater than the control limit for several compounds. The parent sample was qualified as estimated for these compounds. See the attached qualification summary for details of the qualifications.

SDG (LD09018) Sample location F39SED01(040810) was used as the MS/MSD. Several recoveries and RPDs were outside the control limit. The parent sample was qualified as estimated for these compounds. See the attached qualification summary for details of the qualifications.

SDG (LD14020) Sample location F39TW09(30-35) was used as the MS/MSD. Several recoveries were outside the control limit in the MS and the MSD. Several RPDs were greater than the control limit. The parent sample was qualified as estimated for these compounds. See the attached qualification summary for details of the qualifications.

SDG (LD14020) Sample location F39TW11(20-25) was used as the MS/MSD. Several recoveries were outside the control limit in the MS and the MSD. Several RPDs were greater than the control limit. The parent sample was qualified as estimated for these compounds. See the attached qualification summary for details of the qualifications. The recoveries of 4-chloroaniline, bis(2-ethylhexyl)phthalate, 3-nitroaniline, 4-nitroaniline and diphenylamine were less than ten percent in the MS and/or the MSD. The parent sample was qualified as rejected for these compounds.

7. SDG (LC17068) Sample location DUP-2(031810) was collected as a field duplicate of F39SB008(4-5). The RPDs were acceptable at non-detect.

SDG (LD01022) Sample location DUP-3(033010) was collected as a field duplicate of F39TW02(20-25). The RPDs were acceptable at less than 40%.

SDG (LD09018) Sample location DUP-4(040710) was collected as a field duplicate of F39TW06(30-35). The RPDs were acceptable at non-detect.

SDG (LD09018) Sample location DUP01(040810) was collected as a field duplicate of F39SW-01(040810). The RPDs were acceptable at less than 40%.

METALS

Items Reviewed	DQM Deficiency		Qualification Applied	
	No	Yes	No	Yes
1. Holding times/Preservation	DQM		DQM	
2. Reporting limits	M		M	
3. Blanks				
A. Method blanks		DQM		DQM
B. Equipment blanks	NA		NA	
4. Laboratory control sample (LCS) A. LCS %R	DQM		DQM	
B. LCS duplicate (LCSD) %R	DQM		DQM	
C. LCS/LCSD RPD	DQM		DQM	
5. Matrix spike (MS)				
A. MS %R	DQM		DQM	
B. MS duplicate (MSD) %R	DQM		DQM	
C. MS/MSD precision (RPD)	DQM		DQM	
6. Field Duplicate precision (RPD)	DQM		DQM	

M – Manual Review %R - percent recovery RPD - relative percent difference DQM – Data Qualification Module

Comments:
This section presents a discussion of any additions or changes to the electronic data validation for compounds analyzed by Methods 6010C and 7471B.

3A. SDG (LC17068) The metals cadmium, chromium and selenium were detected in the method blank. The associated field samples were qualified as non-detect for these metals if the sample concentration was less than five times the blank value.

SDG (LD09009) The metals arsenic and silver were detected in the method blank. The associated field samples were qualified as non-detect for these metals if the sample concentration was less than five times the blank value.

SDG (LD09018) The metals cadmium, chromium and selenium were detected in the method blank for batch 31320. The associated field samples were qualified as non-detect for these metals if the sample concentration was less than five times the blank value.

SDG (LD09018) The metals arsenic and silver were detected in the method blank for batch 31332.

5. SDG (LC17068) Sample location F39SB009(0.5-1.0) was used as the MS/MSD. The recoveries and RPDs were acceptable.

SDG (LC17068) Sample location F39SB009(3.0-3.5) was used as the MS. The recoveries were acceptable.

SDG (LD09018) Sample location F39SED01(040810) was used as the MS/MSD. The recoveries and RPDs were acceptable.

SDG (LD09018) Sample location F39SED02(040810) was used as the MS. The recoveries were acceptable.

SDG (LD09018) Sample location F39SW-02(0408/10) was used as the MS/MSD for mercury. The recoveries and RPD were acceptable.

6. SDG (LC17068) Sample location DUP-2(031810) was collected as a field duplicate of F39SB008(4-5). The RPDs were acceptable at less than 40%.

   SDG (LD09018) Sample location DUP01(040810) was collected as a field duplicate of F39SW-01(040810). The RPDs were acceptable at less than 40%.

SDG	Sample ID	Method	Analyte	Result	Units	Qualifier	Reason	Dilution
LC13017	DUP-5 (031110)	SW8260	Acetone	1.5	ug/l	UB	Blank Contamination	1
LC13017	G4MW006 (031210)	SW8260	Acetone	1.2	ug/l	UB	Blank Contamination	1
LC13017	G4MW010 (031210)	SW8260	Acetone	2.5	ug/l	UB	Blank Contamination	1
LC13017	G4MW011 (031110)	SW8260	Acetone	1.3	ug/l	UB	Blank Contamination	1
LC13017	G4MW016 (031010)	SW8260	Acetone	1.3	ug/l	UB	Blank Contamination	1
LC13017	G4MW017 (031010)	SW8260	Acetone	1.9	ug/l	UB	Blank Contamination	1
LC13017	G4MW018 (031210)	SW8260	Acetone	1.4	ug/l	UB	Blank Contamination	1
LC13017	G4MW019 (031010)	SW8260	Acetone	1.8	ug/l	UB	Blank Contamination	1
LC13017	G4MW020 (031010)	SW8260	Acetone	1.2	ug/l	UB	Blank Contamination	1
LC13017	G4MW023 (031010)	SW8260	Acetone	1.5	ug/l	UB	Blank Contamination	1
LC13017	G4MW024 (031010)	SW8260	Acetone	3	ug/l	UB	Blank Contamination	1
LC13017	G4MW025 (031010)	SW8260	Acetone	1.8	ug/l	UB	Blank Contamination	1
LC13017	G4MW027 (031110)	SW8260	Acetone	1.8	ug/l	UB	Blank Contamination	1
LC13017	G4MW028 (031110)	SW8260	Acetone	1.8	ug/l	UB	Blank Contamination	1
LC13017	G4MW029 (031110)	SW8260	Acetone	1.1	ug/l	UB	Blank Contamination	1

SDG	Sample ID	Method	Analyte	Result	Units	Qualifier	Reason	Dilution
LC13017	G4MW031 (031010)	SW8260	Acetone	1.3	ug/l	UB	Blank Contamination	1
LC17068	DUP-2 (031810)	SW6010	Selenium	0.53	mg/kg	UB	Blank Contamination	1
LC17068	DUP-2 (031810)	SW6010	Cadmium	0.052	mg/kg	UB	Blank Contamination	1
LC17068	DUP-2 (031810)	SW8260	2-Butanone (MEK)	<9.4	ug/kg	UJ	LCS/LCSD RPD	1
LC17068	DUP-2 (031810)	SW8260	4-Methyl-2-pentanone	<9.4	ug/kg	UJ	LCS/LCSD RPD	1
LC17068	DUP-2 (031810)	SW8260	Acetone	19	ug/kg	UJ	Blank Contamination, LCSD Recovery and LCS/LCSD RPD	1
LC17068	DUP-2 (031810)	SW8260	Methyl acetate	<4.7	ug/kg	UJ	LCS/LCSD RPD	1
LC17068	DUP-2 (031810)	SW8260	2-Hexanone	<9.4	ug/kg	UJ	LCS/LCSD RPD	1
LC17068	F39SB001 (4.5-5.5)	SW6010	Selenium	0.67	mg/kg	UB	Blank Contamination	1
LC17068	F39SB001 (4.5-5.5)	SW6010	Cadmium	0.049	mg/kg	UB	Blank Contamination	1
LC17068	F39SB001 (4.5-5.5)	SW8260	Chloroethane	<4.5	ug/kg	UJ	LCS/LCSD RPD	1
LC17068	F39SB001 (4.5-5.5)	SW8260	Acetone	<18.0	ug/kg	UJ	LCS/LSD RPD	1
LC17068	F39SB001 (4.5-5.5)	SW8270	Nitrobenzene	<78.0	ug/kg	UJ	LCS/LCSD RPD	1
LC17068	F39SB001 (4.5-5.5)	SW8270	2-Chlorophenol	<78.0	ug/kg	UJ	LCS/LCSD RPD	1
LC17068	F39SB001 (4.5-5.5)	SW8270	2-Methylphenol	<78.0	ug/kg	UJ	LCS/LCSD RPD	1

SDG	Sample ID	Method	Analyte	Result	Units	Qualifier	Reason	Dilution
LC17068	F39SB001 (4.5-5.5)	SW8270	bis(2-Chloroethoxy) ether	<78.0	ug/kg	UJ	LCS/LCSD RPD	1
LC17068	F39SB001 (4.5-5.5)	SW8270	bis(2-chloroisopropyl) ether	<78.0	ug/kg	UJ	LCS/LCSD RPD	1
LC17068	F39SB002 (4-5)	SW6010	Cadmium	0.057	mg/kg	UB	Blank Contamination	1
LC17068	F39SB002 (4-5)	SW6010	Selenium	0.39	mg/kg	UB	Blank Contamination	1
LC17068	F39SB002 (4-5)	SW8260	Methyl acetate	<4.4	ug/kg	UJ	LCS/LCSD RPD	1
LC17068	F39SB002 (4-5)	SW8260	4-Methyl-2-pentanone	<8.8	ug/kg	UJ	LCS/LCSD RPD	1
LC17068	F39SB002 (4-5)	SW8260	2-Butanone (MEK)	<8.8	ug/kg	UJ	LCS/LCSD RPD	1
LC17068	F39SB002 (4-5)	SW8260	2-Hexanone	<8.8	ug/kg	UJ	LCS/LCSD RPD	1
LC17068	F39SB002 (4-5)	SW8260	Acetone	15	ug/kg	UJ	Blank Contamination, LCSD Recovery and LCS/LCSD RPD	1
LC17068	F39SB003 (4-5)	SW6010	Selenium	0.79	mg/kg	UB	Blank Contamination	1
LC17068	F39SB003 (4-5)	SW6010	Cadmium	0.027	mg/kg	UB	Blank Contamination	1
LC17068	F39SB003 (4-5)	SW8260	Chloroethane	<4.5	ug/kg	UJ	LCS/LCSD RPD	1
LC17068	F39SB003 (4-5)	SW8260	Acetone	63	ug/kg	J	LCS/LSD RPD	1
LC17068	F39SB004 (4-5)	SW6010	Selenium	0.44	mg/kg	UB	Blank Contamination	1
LC17068	F39SB004 (4-5)	SW6010	Cadmium	0.029	mg/kg	UB	Blank Contamination	1

SDG	Sample ID	Method	Analyte	Result	Units	Qualifier	Reason	Dilution
LC17068	F39SB004 (4-5)	SW8260	CFC-12	<4.7	ug/kg	UJ	LCS/LCSD RPD	1
LC17068	F39SB004 (4-5)	SW8260	CFC-11	<4.7	ug/kg	UJ	LCS/LCSD RPD	1
LC17068	F39SB004 (4-5)	SW8260	1,1,2-Trichloro-1,2,2-Trifluoroethane	<4.7	ug/kg	UJ	LCS/LCSD RPD	1
LC17068	F39SB004 (4-5)	SW8260	Methylcyclohexane	<4.7	ug/kg	UJ	LCS/LCSD RPD	1
LC17068	F39SB004 (4-5)	SW8260	Cyclohexane	<4.7	ug/kg	UJ	LCS/LCSD RPD	1
LC17068	F39SB004 (4-5)	SW8260	Bromomethane	<4.7	ug/kg	UJ	LCS/LCSD RPD	1
LC17068	F39SB004 (4-5)	SW8260	Chloromethane	<4.7	ug/kg	UJ	LCS/LCSD RPD	1
LC17068	F39SB004 (4-5)	SW8260	Chloroethane	<4.7	ug/kg	UJ	LCS/LCSD RPD	1
LC17068	F39SB004 (4-5)	SW8260	Vinyl Chloride	<4.7	ug/kg	UJ	LCS/LCSD RPD	1
LC17068	F39SB004 (4-5)	SW8260	1,1-Dichloroethylene	<4.7	ug/kg	UJ	LCS/LCSD RPD	1
LC17068	F39SB004 (4-5)	SW8260	Methyl acetate	<4.7	ug/kg	UJ	LCS/LCSD RPD	1
LC17068	F39SB005 (4-5)	SW6010	Cadmium	0.022	mg/kg	UB	Blank Contamination	1
LC17068	F39SB005 (4-5)	SW6010	Selenium	0.22	mg/kg	UB	Blank Contamination	1
LC17068	F39SB005 (4-5)	SW8260	Acetone	24	ug/kg	J	LCS/LSD RPD	1
LC17068	F39SB005 (4-5)	SW8260	Chloroethane	<4.7	ug/kg	UJ	LCS/LCSD RPD	1

SDG	Sample ID	Method	Analyte	Result	Units	Qualifier	Reason	Dilution
LC17068	F39SB006 (4-5)	SW6010	Selenium	0.55	mg/kg	UB	Blank Contamination	1
LC17068	F39SB006 (4-5)	SW6010	Cadmium	0.061	mg/kg	UB	Blank Contamination	1
LC17068	F39SB006 (4-5)	SW8260	Chloroethane	<4.4	ug/kg	UJ	LCS/LCSD RPD	1
LC17068	F39SB006 (4-5)	SW8260	Acetone	63	ug/kg	J	LCSD Recovery	1
LC17068	F39SB007 (4-5)	SW6010	Selenium	0.49	mg/kg	UB	Blank Contamination	1
LC17068	F39SB007 (4-5)	SW6010	Cadmium	0.1	mg/kg	UB	Blank Contamination	1
LC17068	F39SB007 (4-5)	SW8260	1,1,2-Trichloro-1,2,2-Trifluoroethane	<4.7	ug/kg	UJ	LCS/LCSD RPD	1
LC17068	F39SB007 (4-5)	SW8260	CFC-12	<4.7	ug/kg	UJ	LCS/LCSD RPD	1
LC17068	F39SB007 (4-5)	SW8260	Methyl acetate	<4.7	ug/kg	UJ	LCS/LCSD RPD	1
LC17068	F39SB007 (4-5)	SW8260	Methylcyclohexane	1	ug/kg	J	LCS/LCSD RPD	1
LC17068	F39SB007 (4-5)	SW8260	Vinyl Chloride	<4.7	ug/kg	UJ	LCS/LCSD RPD	1
LC17068	F39SB007 (4-5)	SW8260	Cyclohexane	<4.7	ug/kg	UJ	LCS/LCSD RPD	1
LC17068	F39SB007 (4-5)	SW8260	CFC-11	<4.7	ug/kg	UJ	LCS/LCSD RPD	1
LC17068	F39SB007 (4-5)	SW8260	Chloromethane	<4.7	ug/kg	UJ	LCS/LCSD RPD	1
LC17068	F39SB007 (4-5)	SW8260	Chloroethane	<4.7	ug/kg	UJ	LCS/LCSD RPD	1

SDG	Sample ID	Method	Analyte	Result	Units	Qualifier	Reason	Dilution
LC17068	F39SB007 (4-5)	SW8260	Bromomethane	<4.7	ug/kg	UJ	LCS/LCSD RPD	1
LC17068	F39SB007 (4-5)	SW8260	1,1-Dichloroethylene	<4.7	ug/kg	UJ	LCS/LCSD RPD	1
LC17068	F39SB008 (4-5)	SW6010	Selenium	0.47	mg/kg	UB	Blank Contamination	1
LC17068	F39SB008 (4-5)	SW6010	Cadmium	0.037	mg/kg	UB	Blank Contamination	1
LC17068	F39SB008 (4-5)	SW8260	2-Hexanone	<9.4	ug/kg	UJ	LCS/LCSD RPD	1
LC17068	F39SB008 (4-5)	SW8260	Acetone	31	ug/kg	UJ	Blank Contamination, LCSD Recovery and LCS/LCSD RPD	1
LC17068	F39SB008 (4-5)	SW8260	2-Butanone (MEK)	<9.4	ug/kg	UJ	LCS/LCSD RPD	1
LC17068	F39SB008 (4-5)	SW8260	Methyl acetate	<4.7	ug/kg	UJ	LCS/LCSD RPD	1
LC17068	F39SB008 (4-5)	SW8260	4-Methyl-2-pentanone	<9.4	ug/kg	UJ	LCS/LCSD RPD	1
LC17068	F39SB009 (0.5-1)	SW6010	Selenium	0.61	mg/kg	UB	Blank Contamination	1
LC17068	F39SB009 (0.5-1)	SW8260	1,1-Dichloroethylene	<5.3	ug/kg	UJ	LCS/LCSD RPD	1
LC17068	F39SB009 (0.5-1)	SW8260	Methylcyclohexane	<5.3	ug/kg	UJ	LCS/LCSD RPD	1
LC17068	F39SB009 (0.5-1)	SW8260	Cyclohexane	<5.3	ug/kg	UJ	LCS/LCSD RPD	1
LC17068	F39SB009 (0.5-1)	SW8260	Bromomethane	<5.3	ug/kg	UJ	LCS/LCSD RPD	1
LC17068	F39SB009 (0.5-1)	SW8260	Chloromethane	<5.3	ug/kg	UJ	LCS/LCSD RPD	1

SDG	Sample ID	Method	Analyte	Result	Units	Qualifier	Reason	Dilution
LC17068	F39SB009 (0.5-1)	SW8260	Chloroethane	<5.3	ug/kg	UJ	LCS/LCSD RPD	1
LC17068	F39SB009 (0.5-1)	SW8260	Vinyl Chloride	<5.3	ug/kg	UJ	LCS/LCSD RPD	1
LC17068	F39SB009 (0.5-1)	SW8260	CFC-12	<5.3	ug/kg	UJ	LCS/LCSD RPD	1
LC17068	F39SB009 (0.5-1)	SW8260	CFC-11	<5.3	ug/kg	UJ	LCS/LCSD RPD	1
LC17068	F39SB009 (0.5-1)	SW8260	1,1,2-Trichloro-1,2,2-Trifluoroethane	<5.3	ug/kg	UJ	LCS/LCSD RPD	1
LC17068	F39SB009 (0.5-1)	SW8260	Methyl acetate	<5.3	ug/kg	UJ	LCS/LCSD RPD	1
LC17068	F39SB009 (3.0-3.5)	SW6010	Cadmium	0.045	mg/kg	UB	Blank Contamination	1
LC17068	F39SB009 (3.0-3.5)	SW6010	Selenium	0.51	mg/kg	UB	Blank Contamination	1
LC17068	F39SB009 (3.0-3.5)	SW8260	Chloroethane	<5.0	ug/kg	UJ	LCS/LCSD RPD	1
LC17068	F39SB009 (3.0-3.5)	SW8260	Acetone	<20.0	ug/kg	UJ	LCS/LSD RPD	1
LC17068	F39SB010 (0.5-1.0)	SW6010	Cadmium	0.054	mg/kg	UB	Blank Contamination	1
LC17068	F39SB010 (0.5-1.0)	SW6010	Selenium	0.38	mg/kg	UB	Blank Contamination	1
LC17068	F39SB010 (0.5-1.0)	SW8260	Vinyl Chloride	<4.9	ug/kg	UJ	LCS/LCSD RPD	1
LC17068	F39SB010 (0.5-1.0)	SW8260	Methyl acetate	<4.9	ug/kg	UJ	LCS/LCSD RPD	1
LC17068	F39SB010 (0.5-1.0)	SW8260	1,1,2-Trichloro-1,2,2-Trifluoroethane	<4.9	ug/kg	UJ	LCS/LCSD RPD	1

SDG	Sample ID	Method	Analyte	Result	Units	Qualifier	Reason	Dilution
LC17068	F39SB010 (0.5-1.0)	SW8260	CFC-12	<4.9	ug/kg	UJ	LCS/LCSD RPD	1
LC17068	F39SB010 (0.5-1.0)	SW8260	1,1-Dichloroethylene	<4.9	ug/kg	UJ	LCS/LCSD RPD	1
LC17068	F39SB010 (0.5-1.0)	SW8260	Chloroethane	<4.9	ug/kg	UJ	LCS/LCSD RPD	1
LC17068	F39SB010 (0.5-1.0)	SW8260	Chloromethane	<4.9	ug/kg	UJ	LCS/LCSD RPD	1
LC17068	F39SB010 (0.5-1.0)	SW8260	Bromomethane	<4.9	ug/kg	UJ	LCS/LCSD RPD	1
LC17068	F39SB010 (0.5-1.0)	SW8260	Cyclohexane	<4.9	ug/kg	UJ	LCS/LCSD RPD	1
LC17068	F39SB010 (0.5-1.0)	SW8260	Methylcyclohexane	<4.9	ug/kg	UJ	LCS/LCSD RPD	1
LC17068	F39SB010 (0.5-1.0)	SW8260	CFC-11	<4.9	ug/kg	UJ	LCS/LCSD RPD	1
LC17068	F39SB010 (3.0-3.5)	SW6010	Cadmium	0.041	mg/kg	UB	Blank Contamination	1
LC17068	F39SB010 (3.0-3.5)	SW6010	Selenium	0.3	mg/kg	UB	Blank Contamination	1
LC17068	F39SB010 (3.0-3.5)	SW8260	Bromomethane	<4.7	ug/kg	UJ	LCS/LCSD RPD	1
LC17068	F39SB010 (3.0-3.5)	SW8260	Chloromethane	<4.7	ug/kg	UJ	LCS/LCSD RPD	1
LC17068	F39SB010 (3.0-3.5)	SW8260	Chloroethane	<4.7	ug/kg	UJ	LCS/LCSD RPD	1
LC17068	F39SB010 (3.0-3.5)	SW8260	Vinyl Chloride	<4.7	ug/kg	UJ	LCS/LCSD RPD	1
LC17068	F39SB010 (3.0-3.5)	SW8260	Cyclohexane	<4.7	ug/kg	UJ	LCS/LCSD RPD	1

SDG	Sample ID	Method	Analyte	Result	Units	Qualifier	Reason	Dilution
LC17068	F39SB010 (3.0-3.5)	SW8260	Methyl acetate	<4.7	ug/kg	UJ	LCS/LCSD RPD	1
LC17068	F39SB010 (3.0-3.5)	SW8260	1,1-Dichloroethylene	<4.7	ug/kg	UJ	LCS/LCSD RPD	1
LC17068	F39SB010 (3.0-3.5)	SW8260	1,1,2-Trichloro-1,2,2-Trifluoroethane	<4.7	ug/kg	UJ	LCS/LCSD RPD	1
LC17068	F39SB010 (3.0-3.5)	SW8260	CFC-12	<4.7	ug/kg	UJ	LCS/LCSD RPD	1
LC17068	F39SB010 (3.0-3.5)	SW8260	CFC-11	<4.7	ug/kg	UJ	LCS/LCSD RPD	1
LC17068	F39SB010 (3.0-3.5)	SW8260	Methylcyclohexane	<4.7	ug/kg	UJ	LCS/LCSD RPD	1
LC17068	F39SB011 (0.5-1.0)	SW6010	Cadmium	0.038	mg/kg	UB	Blank Contamination	1
LC17068	F39SB011 (0.5-1.0)	SW6010	Selenium	0.52	mg/kg	UB	Blank Contamination	1
LC17068	F39SB011 (0.5-1.0)	SW8260	1,1-Dichloroethylene	<4.4	ug/kg	UJ	LCS/LCSD RPD	1
LC17068	F39SB011 (0.5-1.0)	SW8260	Chloroethane	<4.4	ug/kg	UJ	LCS/LCSD RPD	1
LC17068	F39SB011 (0.5-1.0)	SW8260	CFC-12	<4.4	ug/kg	UJ	LCS/LCSD RPD	1
LC17068	F39SB011 (0.5-1.0)	SW8260	Chloromethane	<4.4	ug/kg	UJ	LCS/LCSD RPD	1
LC17068	F39SB011 (0.5-1.0)	SW8260	Vinyl Chloride	<4.4	ug/kg	UJ	LCS/LCSD RPD	1
LC17068	F39SB011 (0.5-1.0)	SW8260	Cyclohexane	<4.4	ug/kg	UJ	LCS/LCSD RPD	1
LC17068	F39SB011 (0.5-1.0)	SW8260	CFC-11	<4.4	ug/kg	UJ	LCS/LCSD RPD	1

SDG	Sample ID	Method	Analyte	Result	Units	Qualifier	Reason	Dilution
LC17068	F39SB011 (0.5-1.0)	SW8260	Methylcyclohexane	<4.4	ug/kg	UJ	LCS/LCSD RPD	1
LC17068	F39SB011 (0.5-1.0)	SW8260	1,1,2-Trichloro-1,2,2-Trifluoroethane	<4.4	ug/kg	UJ	LCS/LCSD RPD	1
LC17068	F39SB011 (0.5-1.0)	SW8260	Methyl acetate	<4.4	ug/kg	UJ	LCS/LCSD RPD	1
LC17068	F39SB011 (0.5-1.0)	SW8260	Bromomethane	<4.4	ug/kg	UJ	LCS/LCSD RPD	1
LC17068	F39SB011 (3.0-3.5)	SW6010	Selenium	0.38	mg/kg	UB	Blank Contamination	1
LC17068	F39SB011 (3.0-3.5)	SW6010	Cadmium	0.03	mg/kg	UB	Blank Contamination	1
LC17068	F39SB011 (3.0-3.5)	SW8260	Acetone	63	ug/kg	J	LCS/LSD RPD	1
LC17068	F39SB011 (3.0-3.5)	SW8260	Chloroethane	<4.9	ug/kg	UJ	LCS/LCSD RPD	1
LC17068	F39SB012 (0.5-1.0)	SW6010	Chromium	0.38	mg/kg	UB	Blank Contamination	1
LC17068	F39SB012 (0.5-1.0)	SW6010	Cadmium	0.014	mg/kg	UB	Blank Contamination	1
LC17068	F39SB012 (0.5-1.0)	SW8260	Cyclohexane	<4.5	ug/kg	UJ	LCS/LCSD RPD	1
LC17068	F39SB012 (0.5-1.0)	SW8260	Methylcyclohexane	<4.5	ug/kg	UJ	LCS/LCSD RPD	1
LC17068	F39SB012 (0.5-1.0)	SW8260	Chloromethane	<4.5	ug/kg	UJ	LCS/LCSD RPD	1
LC17068	F39SB012 (0.5-1.0)	SW8260	Bromomethane	<4.5	ug/kg	UJ	LCS/LCSD RPD	1
LC17068	F39SB012 (0.5-1.0)	SW8260	1,1-Dichloroethylene	<4.5	ug/kg	UJ	LCS/LCSD RPD	1

SDG	Sample ID	Method	Analyte	Result	Units	Qualifier	Reason	Dilution
LC17068	F39SB012 (0.5-1.0)	SW8260	Vinyl Chloride	<4.5	ug/kg	UJ	LCS/LCSD RPD	1
LC17068	F39SB012 (0.5-1.0)	SW8260	Methyl acetate	<4.5	ug/kg	UJ	LCS/LCSD RPD	1
LC17068	F39SB012 (0.5-1.0)	SW8260	1,1,2-Trichloro-1,2,2-Trifluoroethane	<4.5	ug/kg	UJ	LCS/LCSD RPD	1
LC17068	F39SB012 (0.5-1.0)	SW8260	CFC-12	<4.5	ug/kg	UJ	LCS/LCSD RPD	1
LC17068	F39SB012 (0.5-1.0)	SW8260	CFC-11	<4.5	ug/kg	UJ	LCS/LCSD RPD	1
LC17068	F39SB012 (0.5-1.0)	SW8260	Chloroethane	<4.5	ug/kg	UJ	LCS/LCSD RPD	1
LC17068	F39SB012 (3.0-3.5)	SW6010	Selenium	0.65	mg/kg	UB	Blank Contamination	1
LC17068	F39SB012 (3.0-3.5)	SW6010	Cadmium	0.038	mg/kg	UB	Blank Contamination	1
LC17068	F39SB012 (3.0-3.5)	SW8260	Vinyl Chloride	<4.2	ug/kg	UJ	LCS/LCSD RPD	1
LC17068	F39SB012 (3.0-3.5)	SW8260	Methyl acetate	<4.2	ug/kg	UJ	LCS/LCSD RPD	1
LC17068	F39SB012 (3.0-3.5)	SW8260	1,1,2-Trichloro-1,2,2-Trifluoroethane	<4.2	ug/kg	UJ	LCS/LCSD RPD	1
LC17068	F39SB012 (3.0-3.5)	SW8260	CFC-12	<4.2	ug/kg	UJ	LCS/LCSD RPD	1
LC17068	F39SB012 (3.0-3.5)	SW8260	1,1-Dichloroethylene	<4.2	ug/kg	UJ	LCS/LCSD RPD	1
LC17068	F39SB012 (3.0-3.5)	SW8260	Chloroethane	<4.2	ug/kg	UJ	LCS/LCSD RPD	1
LC17068	F39SB012 (3.0-3.5)	SW8260	Chloromethane	<4.2	ug/kg	UJ	LCS/LCSD RPD	1

SDG	Sample ID	Method	Analyte	Result	Units	Qualifier	Reason	Dilution
LC17068	F39SB012 (3.0-3.5)	SW8260	Bromomethane	<4.2	ug/kg	UJ	LCS/LCSD RPD	1
LC17068	F39SB012 (3.0-3.5)	SW8260	Cyclohexane	<4.2	ug/kg	UJ	LCS/LCSD RPD	1
LC17068	F39SB012 (3.0-3.5)	SW8260	Methylcyclohexane	<4.2	ug/kg	UJ	LCS/LCSD RPD	1
LC17068	F39SB012 (3.0-3.5)	SW8260	CFC-11	<4.2	ug/kg	UJ	LCS/LCSD RPD	1
LC17068	TRIP BLANK (031610)	SW8260	Tribromomethane	<0.50	ug/l	UJ	LCS Recovery	1
LC20005	F39TW01 (40-45)	SW8260	Acetone	6.9	ug/l	UB	Blank Contamination	1
LC20005	F39TW01 (40-45)	SW8260	CFC-11	<0.50	ug/l	UJ	LCS/LCSD RPD	1
LC20005	F39TW01 (40-45)	SW8260	Carbon disulfide	0.27	ug/l	UB	Blank Contamination	1
LC20005	F39TW01 (40-45)	SW8270	p-Chloroaniline	<1.0	ug/l	UJ	LCS Recovery and LCS/LCSD RPD	1
LC20005	Trip Blank (031810)	SW8260	CFC-11	<0.50	ug/l	UJ	LCS/LCSD RPD	1
LC20005	Trip Blank (031810)	SW8260	CFC-11	<0.50	ug/l	UJ	LCS/LCSD RPD	1
LD01022	DUP-3 (033010)	SW8260	Methylene Chloride	0.21	ug/l	UB	Blank Contamination	1
LD01022	DUP-3 (033010)	SW8260	Bromomethane	<0.50	ug/l	UJ	LCS/LCSD RPD	1
LD01022	F39TW01 (10-15)	SW8260	Acetone	4.6	ug/l	UB	Blank Contamination	1
LD01022	F39TW01 (10-15)	SW8260	Bromomethane	<0.50	ug/l	UJ	LCS/LCSD RPD	1

SDG	Sample ID	Method	Analyte	Result	Units	Qualifier	Reason	Dilution
LD01022	F39TW01 (10-15)	SW8260	Methylene Chloride	0.18	ug/l	UB	Blank Contamination	1
LD01022	F39TW01 (20-25)	SW8260	1,1,1-Trichloroethane	<0.50	ug/l	UJ	MS Recovery and MS/MSD RPD	1
LD01022	F39TW01 (20-25)	SW8260	1,1-Dichloroethylene	0.1	ug/l	J	MS/MSD Recovery and MS/MSD RPD	1
LD01022	F39TW01 (20-25)	SW8260	1,1-Dichloroethane	<0.50	ug/l	UJ	MS/MSD Recovery and MS/MSD RPD	1
LD01022	F39TW01 (20-25)	SW8260	Bromodichloromethane	<0.50	ug/l	UJ	MS Recovery and MS/MSD RPD	1
LD01022	F39TW01 (20-25)	SW8260	Tribromomethane	<0.50	ug/l	UJ	MS/MSD Recovery and MS/MSD RPD	1
LD01022	F39TW01 (20-25)	SW8260	Carbon disulfide	0.23	ug/l	J	MS Recovery and MS/MSD RPD	1
LD01022	F39TW01 (20-25)	SW8260	Methylene Chloride	<0.50	ug/l	UJ	MS/MSD Recovery and MS/MSD RPD	1
LD01022	F39TW01 (20-25)	SW8260	CFC-11	<0.50	ug/l	UJ	MS Recovery and MS/MSD RPD	1
LD01022	F39TW01 (20-25)	SW8260	Bromomethane	<0.50	ug/l	UJ	MS Recovery	1
LD01022	F39TW01 (20-25)	SW8260	1,1,2-Trichloroethane	<0.50	ug/l	UJ	MS Recovery and MS/MSD RPD	1
LD01022	F39TW01 (20-25)	SW8260	Vinyl Chloride	<0.50	ug/l	UJ	MS/MSD RPD	1
LD01022	F39TW01 (20-25)	SW8260	CFC-12	<0.50	ug/l	UJ	MS/MSD RPD	1
LD01022	F39TW01 (20-25)	SW8260	1,1,2-Trichloro-1,2,2-Trifluoroethane	<0.50	ug/l	UJ	MS Recovery and MS/MSD RPD	1
LD01022	F39TW01 (20-25)	SW8260	Methylcyclohexane	<5.0	ug/l	UJ	MS Recovery and MS/MSD RPD	1

SDG	Sample ID	Method	Analyte	Result	Units	Qualifier	Reason	Dilution
LD01022	F39TW01 (20-25)	SW8260	1,2-Dichloropropane	<0.50	ug/l	UJ	MS Recovery and MS/MSD RPD	1
LD01022	F39TW01 (20-25)	SW8260	2-Butanone (MEK)	<10.0	ug/l	UJ	MS Recovery and MS/MSD RPD	1
LD01022	F39TW01 (20-25)	SW8260	Trichloroethylene	40	ug/l	J	MS Recovery	1
LD01022	F39TW01 (20-25)	SW8260	Methyl acetate	<1.0	ug/l	UJ	MS/MSD RPD	1
LD01022	F39TW01 (20-25)	SW8260	1,1,2,2-Tetrachloroethane	<0.50	ug/l	UJ	MS Recovery and MS/MSD RPD	1
LD01022	F39TW01 (20-25)	SW8260	1,2-Dichlorobenzene	<0.50	ug/l	UJ	MS Recovery and MS/MSD RPD	1
LD01022	F39TW01 (20-25)	SW8260	1,2-Dibromo-3-chloropropane (DBCP)	<0.50	ug/l	UJ	MS Recovery and MS/MSD RPD	1
LD01022	F39TW01 (20-25)	SW8260	Benzene, 1-methylethyl	<0.50	ug/l	UJ	MS Recovery and MS/MSD RPD	1
LD01022	F39TW01 (20-25)	SW8260	Benzene	0.53	ug/l	J	MS Recovery and MS/MSD RPD	1
LD01022	F39TW01 (20-25)	SW8260	Cyclohexane	<0.50	ug/l	UJ	MS Recovery and MS/MSD RPD	1
LD01022	F39TW01 (20-25)	SW8260	Chlorobenzene	<0.50	ug/l	UJ	MS Recovery and MS/MSD RPD	1
LD01022	F39TW01 (20-25)	SW8260	Chloroform	<0.50	ug/l	UJ	MS/MSD Recovery and MS/MSD RPD	1
LD01022	F39TW01 (20-25)	SW8260	Ethylbenzene	<0.50	ug/l	UJ	MS Recovery and MS/MSD RPD	1
LD01022	F39TW01 (20-25)	SW8260	Styrene	<0.50	ug/l	UJ	MS/MSD Recovery and MS/MSD RPD	1
LD01022	F39TW01 (20-25)	SW8260	cis-1,3-Dichloropropene	<0.50	ug/l	UJ	MS/MSD Recovery and MS/MSD RPD	1

SDG	Sample ID	Method	Analyte	Result	Units	Qualifier	Reason	Dilution
LD01022	F39TW01 (20-25)	SW8260	trans-1,3-Dichloropropene	<0.50	ug/l	UJ	MS/MSD Recovery and MS/MSD RPD	1
LD01022	F39TW01 (20-25)	SW8260	1,4-Dichlorobenzene	<0.50	ug/l	UJ	MS Recovery and MS/MSD RPD	1
LD01022	F39TW01 (20-25)	SW8260	1,2-Dibromoethane (EDB)	<0.50	ug/l	UJ	MS Recovery and MS/MSD RPD	1
LD01022	F39TW01 (20-25)	SW8260	1,2-Dichloroethane	<0.50	ug/l	UJ	MS/MSD Recovery and MS/MSD RPD	1
LD01022	F39TW01 (20-25)	SW8260	Toluene	<0.50	ug/l	UJ	MS Recovery and MS/MSD RPD	1
LD01022	F39TW01 (20-25)	SW8260	1,2,4-Trichlorobenzene	<0.50	ug/l	UJ	MS Recovery and MS/MSD RPD	1
LD01022	F39TW01 (20-25)	SW8260	Chlorodibromomethane	<0.50	ug/l	UJ	MS/MSD Recovery and MS/MSD RPD	1
LD01022	F39TW01 (20-25)	SW8260	Tetrachloroethene	40	ug/l	J	MS Recovery	1
LD01022	F39TW01 (20-25)	SW8260	Xylenes (total)	<0.50	ug/l	UJ	MS Recovery and MS/MSD RPD	1
LD01022	F39TW01 (20-25)	SW8260	cis-1,2-Dichloroethene	4.4	ug/l	J	MS/MSD Recovery	1
LD01022	F39TW01 (20-25)	SW8260	trans-1,2-Dichloroethene	0.33	ug/l	J	MS/MSD Recovery	1
LD01022	F39TW01 (20-25)	SW8260	Methyl tert-butyl ether	<0.50	ug/l	UJ	MS/MSD Recovery and MS/MSD RPD	1
LD01022	F39TW01 (20-25)	SW8260	m-Dichlorobenzene	<0.50	ug/l	UJ	MS Recovery and MS/MSD RPD	1
LD01022	F39TW01 (20-25)	SW8260	Carbon Tetrachloride	<0.50	ug/l	UJ	MS/MSD Recovery and MS/MSD RPD	1
LD01022	F39TW01 (20-25)	SW8260	2-Hexanone	<10.0	ug/l	UJ	MS/MSD RPD	1

SDG	Sample ID	Method	Analyte	Result	Units	Qualifier	Reason	Dilution
LD01022	F39TW01 (20-25)	SW8260	Acetone	2.9	ug/l	J	MS/MSD Recovery	1
LD01022	F39TW01 (20-25)	SW8260	4-Methyl-2-pentanone	<10.0	ug/l	UJ	MS Recovery and MS/MSD RPD	1
LD01022	F39TW01 (20-25)	SW8270	Di-n-octyl phthalate	<5.4	ug/l	UJ	MS/MSD Recovery	1
LD01022	F39TW01 (20-25)	SW8270	Dibenzo(a,h)anthracene	<1.1	ug/l	UJ	MS/MSD Recovery	1
LD01022	F39TW01 (20-25)	SW8270	Benzo(a)anthracene	<1.1	ug/l	UJ	MS/MSD Recovery	1
LD01022	F39TW01 (20-25)	SW8270	Benzo(g,h,i)perylene	<1.1	ug/l	R	MS Recovery	1
LD01022	F39TW01 (20-25)	SW8270	Indeno(1,2,3-cd)pyrene	<1.1	ug/l	UJ	MS/MSD Recovery	1
LD01022	F39TW01 (20-25)	SW8270	1,2-Benz-phenanthracene	<1.1	ug/l	UJ	MS/MSD Recovery	1
LD01022	F39TW01 (30-35)	SW8260	1,2-Dibromo-3-chloropropane (DBCP)	<0.50	ug/l	UJ	LCSD Recovery	1
LD01022	F39TW02 (10-15)	SW8260	Bromomethane	<0.50	ug/l	UJ	LCS/LCSD RPD	1
LD01022	F39TW02 (10-15)	SW8260	Methylene Chloride	0.2	ug/l	UB	Blank Contamination	1
LD01022	F39TW02 (20-25)	SW8260	1,2-Dibromo-3-chloropropane (DBCP)	<0.50	ug/l	UJ	LCSD Recovery	1
LD01022	F39TW02 (30-35)	SW8260	1,2-Dibromo-3-chloropropane (DBCP)	<0.50	ug/l	UJ	LCSD Recovery	1
LD01022	F39TW02 (40-45)	SW8260	1,2-Dibromo-3-chloropropane (DBCP)	<0.50	ug/l	UJ	LCSD Recovery	1
LD01022	F39TW03 (10-15)	SW8260	Bromomethane	<0.50	ug/l	UJ	LCS/LCSD RPD	1

SDG	Sample ID	Method	Analyte	Result	Units	Qualifier	Reason	Dilution
LD01022	F39TW03 (10-15)	SW8260	Methylene Chloride	0.18	ug/l	UB	Blank Contamination	1
LD01022	F39TW03 (10-15)	SW8260	Acetone	5	ug/l	UB	Blank Contamination	1
LD01022	F39TW03 (20-25)	SW8260	Acetone	3.4	ug/l	UB	Blank Contamination	1
LD01022	F39TW03 (20-25)	SW8260	Carbon disulfide	0.14	ug/l	UB	Blank Contamination	1
LD01022	F39TW03 (20-25)	SW8260	Methylene Chloride	0.17	ug/l	UB	Blank Contamination	1
LD01022	F39TW03 (30-35)	SW8260	Methylene Chloride	0.2	ug/l	UB	Blank Contamination	1
LD01022	F39TW03 (30-35)	SW8260	Acetone	2.4	ug/l	UB	Blank Contamination	1
LD01022	F39TW03 (40-45)	SW8260	Methylene Chloride	0.2	ug/l	UB	Blank Contamination	1
LD01022	F39TW03 (40-45)	SW8260	Acetone	5.2	ug/l	UB	Blank Contamination	1
LD01022	F39TW03 (40-45)	SW8260	Bromomethane	<0.50	ug/l	UJ	LCS/LCSD RPD	1
LD01022	F39TW03 (40-45)	SW8270	Acenaphthylene	<1.0	ug/l	R	Surrogate Recovery	1
LD01022	F39TW03 (40-45)	SW8270	Di-n-butyl phthalate	<5.2	ug/l	R	Surrogate Recovery	1
LD01022	F39TW03 (40-45)	SW8270	Hexachlorobenzene	<1.0	ug/l	R	Surrogate Recovery	1
LD01022	F39TW03 (40-45)	SW8270	Anthracene	<1.0	ug/l	R	Surrogate Recovery	1
LD01022	F39TW03 (40-45)	SW8270	2,4-Dinitrotoluene	<2.1	ug/l	R	Surrogate Recovery	1

SDG	Sample ID	Method	Analyte	Result	Units	Qualifier	Reason	Dilution
LD01022	F39TW03 (40-45)	SW8270	Pyrene	<1.0	ug/l	R	Surrogate Recovery	1
LD01022	F39TW03 (40-45)	SW8270	Dimethyl Phthalate	<5.2	ug/l	R	Surrogate Recovery	1
LD01022	F39TW03 (40-45)	SW8270	Dibenzofuran	<1.0	ug/l	R	Surrogate Recovery	1
LD01022	F39TW03 (40-45)	SW8270	Atrazine	<1.0	ug/l	R	Surrogate Recovery	1
LD01022	F39TW03 (40-45)	SW8270	Benzo(g,h,i)perylene	<1.0	ug/l	R	Surrogate Recovery	1
LD01022	F39TW03 (40-45)	SW8270	Indeno(1,2,3-cd)pyrene	<1.0	ug/l	R	Surrogate Recovery	1
LD01022	F39TW03 (40-45)	SW8270	Benzo(b)fluoranthene	<1.0	ug/l	R	Surrogate Recovery	1
LD01022	F39TW03 (40-45)	SW8270	bis(2-Ethylhexyl)phthalate	<5.2	ug/l	R	Surrogate Recovery	1
LD01022	F39TW03 (40-45)	SW8270	Benzo(k)fluoranthene	<1.0	ug/l	R	Surrogate Recovery	1
LD01022	F39TW03 (40-45)	SW8270	bis(2-Chloroethoxy)methane	<1.0	ug/l	R	Surrogate Recovery	1
LD01022	F39TW03 (40-45)	SW8270	1,2-Benz-phenanthracene	<1.0	ug/l	R	Surrogate Recovery	1
LD01022	F39TW03 (40-45)	SW8270	Benzo(a)pyrene	<1.0	ug/l	R	Surrogate Recovery	1
LD01022	F39TW03 (40-45)	SW8270	Dibenzo(a,h)anthracene	<1.0	ug/l	R	Surrogate Recovery	1
LD01022	F39TW03 (40-45)	SW8270	Benzo(a)anthracene	<1.0	ug/l	R	Surrogate Recovery	1
LD01022	F39TW03 (40-45)	SW8270	2,6-Dinitroluene	<2.1	ug/l	R	Surrogate Recovery	1

SDG	Sample ID	Method	Analyte	Result	Units	Qualifier	Reason	Dilution
LD01022	F39TW03 (40-45)	SW8270	N-Nitroso di-n-propylamine	<1.0	ug/l	R	Surrogate Recovery	1
LD01022	F39TW03 (40-45)	SW8270	Hexachloroethane	<1.0	ug/l	R	Surrogate Recovery	1
LD01022	F39TW03 (40-45)	SW8270	4-Chlorophenyl Phenyl Ether	<1.0	ug/l	R	Surrogate Recovery	1
LD01022	F39TW03 (40-45)	SW8270	Hexachlorocyclopentadiene	<5.2	ug/l	R	Surrogate Recovery	1
LD01022	F39TW03 (40-45)	SW8270	3,5,5-Trimethyl-2-cyclohexene-1-one	<1.0	ug/l	R	Surrogate Recovery	1
LD01022	F39TW03 (40-45)	SW8270	Acenaphthene	<1.0	ug/l	R	Surrogate Recovery	1
LD01022	F39TW03 (40-45)	SW8270	Diethyl phthalate	<5.2	ug/l	R	Surrogate Recovery	1
LD01022	F39TW03 (40-45)	SW8270	Fluoranthene	<1.0	ug/l	R	Surrogate Recovery	1
LD01022	F39TW03 (40-45)	SW8270	2-Nitroaniline	<2.1	ug/l	R	Surrogate Recovery	1
LD01022	F39TW03 (40-45)	SW8270	p-Nitroaniline	<2.1	ug/l	R	Surrogate Recovery	1
LD01022	F39TW03 (40-45)	SW8270	3-Nitroaniline	<2.1	ug/l	R	Surrogate Recovery	1
LD01022	F39TW03 (40-45)	SW8270	Nitrobenzene	<1.0	ug/l	R	Surrogate Recovery	1
LD01022	F39TW03 (40-45)	SW8270	Acetophenone	<1.0	ug/l	R	Surrogate Recovery	1
LD01022	F39TW03 (40-45)	SW8270	1,1'-Biphenyl	<1.0	ug/l	R	Surrogate Recovery	1
LD01022	F39TW03 (40-45)	SW8270	3,3'-Dichlorobenzidine	<5.2	ug/l	R	Surrogate Recovery	1

SDG	Sample ID	Method	Analyte	Result	Units	Qualifier	Reason	Dilution
LD01022	F39TW03 (40-45)	SW8270	2-Chloronaphthalene	<1.0	ug/l	R	Surrogate Recovery	1
LD01022	F39TW03 (40-45)	SW8270	Di-n-octyl phthalate	<5.2	ug/l	R	Surrogate Recovery	1
LD01022	F39TW03 (40-45)	SW8270	Naphthalene	<1.0	ug/l	R	Surrogate Recovery	1
LD01022	F39TW03 (40-45)	SW8270	Hexachloro-1,3-Butadiene	<1.0	ug/l	R	Surrogate Recovery	1
LD01022	F39TW03 (40-45)	SW8270	4-Bromophenyl Phenyl Ether	<1.0	ug/l	R	Surrogate Recovery	1
LD01022	F39TW03 (40-45)	SW8270	bis(2-Chloroethoxy) ether	<1.0	ug/l	R	Surrogate Recovery	1
LD01022	F39TW03 (40-45)	SW8270	bis(2-chloroisopropyl) ether	<1.0	ug/l	R	Surrogate Recovery	1
LD01022	F39TW03 (40-45)	SW8270	2-Methyl naphthalene	<1.0	ug/l	R	Surrogate Recovery	1
LD01022	F39TW03 (40-45)	SW8270	Caprolactam	<5.2	ug/l	R	Surrogate Recovery	1
LD01022	F39TW03 (40-45)	SW8270	Carbazole	<1.0	ug/l	R	Surrogate Recovery	1
LD01022	F39TW03 (40-45)	SW8270	Benzaldehyde	<5.2	ug/l	R	Surrogate Recovery	1
LD01022	F39TW03 (40-45)	SW8270	Phenanthrene	<1.0	ug/l	R	Surrogate Recovery	1
LD01022	F39TW03 (40-45)	SW8270	Benzyl Butyl Phthalate	<5.2	ug/l	R	Surrogate Recovery	1
LD01022	F39TW03 (40-45)	SW8270	N-Nitrosodiphenylamine	<1.0	ug/l	R	Surrogate Recovery	1
LD01022	F39TW03 (40-45)	SW8270	Fluorene	<1.0	ug/l	R	Surrogate Recovery	1

SDG	Sample ID	Method	Analyte	Result	Units	Qualifier	Reason	Dilution
LD01022	F39TW03 (40-45)	SW8270	p-Chloroaniline	<1.0	ug/l	R	Surrogate Recovery	1
LD01022	F39TW04 (10-15)	SW8260	Acetone	3.5	ug/l	UB	Blank Contamination	1
LD01022	F39TW04 (10-15)	SW8260	Methylene Chloride	0.19	ug/l	UB	Blank Contamination	1
LD01022	F39TW04 (10-15)	SW8260	Carbon disulfide	0.18	ug/l	UB	Blank Contamination	1
LD01022	F39TW04 (20-25)	SW8260	Acetone	4.3	ug/l	UB	Blank Contamination	1
LD01022	F39TW04 (20-25)	SW8260	Methylene Chloride	0.17	ug/l	UB	Blank Contamination	1
LD01022	F39TW04 (20-25)	SW8260	Carbon disulfide	0.4	ug/l	UB	Blank Contamination	1
LD01022	F39TW04 (30-35)	SW8260	Carbon disulfide	0.8	ug/l	UB	Blank Contamination	1
LD01022	F39TW04 (30-35)	SW8260	Methylene Chloride	0.17	ug/l	UB	Blank Contamination	1
LD01022	F39TW04 (30-35)	SW8260	Acetone	5.8	ug/l	UB	Blank Contamination	1
LD01022	F39TW04 (40-45)	SW8260	Methylene Chloride	0.2	ug/l	UB	Blank Contamination	1
LD01022	F39TW04 (40-45)	SW8260	Acetone	8.6	ug/l	UB	Blank Contamination	1
LD09009	G4MW033 (040710)	SW6010	Arsenic	0.0047	mg/l	UB	Blank Contamination	1
LD09009	G4MW033 (040710)	SW8260	Methylene Chloride	0.24	ug/l	UB	Blank Contamination	1
LD09009	G4MW033 (040710)	SW8260	Acetone	3.6	ug/l	UB	Blank Contamination	1

SDG	Sample ID	Method	Analyte	Result	Units	Qualifier	Reason	Dilution
LD09009	G4MW034 (040610)	SW6010	Silver	0.0008	mg/l	UB	Blank Contamination	1
LD09009	G4MW034 (040610)	SW6010	Arsenic	0.0049	mg/l	UB	Blank Contamination	1
LD09009	G4MW034 (040610)	SW8260	Acetone	1.8	ug/l	UB	Blank Contamination	1
LD09009	G4MW034 (040610)	SW8260	Methylene Chloride	0.23	ug/l	UB	Blank Contamination	1
LD09009	G4MW034 (040610)	SW8270	bis(2-Ethylhexyl)phthalate	<5.1	ug/l	UJ	MS/MSD RPD	1
LD09009	G4MW034 (040610)	SW8270	p-Nitroaniline	<2.0	ug/l	R	MSD Recovery	1
LD09009	G4MW034 (040610)	SW8270	bis(2-Chloroethoxy)methane	<1.0	ug/l	UJ	MS/MSD Recovery	1
LD09009	G4MW034 (040610)	SW8270	N-Nitrosodiphenylamine	<1.0	ug/l	UJ	MS/MSD RPD	1
LD09009	G4MW034 (040610)	SW8270	Di-n-octyl phthalate	<5.1	ug/l	UJ	MS/MSD RPD	1
LD09009	G4MW034 (040610)	SW8270	Benzo(g,h,i)perylene	<1.0	ug/l	UJ	MS/MSD RPD	1
LD09009	G4MW034 (040610)	SW8270	Indeno(1,2,3-cd)pyrene	<1.0	ug/l	UJ	MS/MSD RPD	1
LD09009	G4MW034 (040610)	SW8270	Benzo(b)fluoranthene	<1.0	ug/l	UJ	MS/MSD RPD	1
LD09009	G4MW034 (040610)	SW8270	Benzo(k)fluoranthene	<1.0	ug/l	UJ	MS/MSD RPD	1
LD09009	G4MW034 (040610)	SW8270	Benzo(a)pyrene	<1.0	ug/l	UJ	MS/MSD RPD	1
LD09009	G4MW034 (040610)	SW8270	Dibenzo(a,h)anthracene	<1.0	ug/l	UJ	MSD Recovery and MS/MSD RPD	1

SDG	Sample ID	Method	Analyte	Result	Units	Qualifier	Reason	Dilution
LD09009	G4MW034 (040610)	SW8270	N-Nitroso di-n-propylamine	<1.0	ug/l	UJ	MS Recovery	1
LD09009	G4MW034 (040610)	SW8270	3,5,5-Trimethyl-2-cyclohexene-1-one	<1.0	ug/l	UJ	MS Recovery	1
LD09009	G4MW034 (040610)	SW8270	Carbazole	<1.0	ug/l	UJ	MSD Recovery and MS/MSD RPD	1
LD09009	G4MW034 (040610)	SW8270	2-Methyl naphthalene	<1.0	ug/l	UJ	MS Recovery	1
LD09009	G4MW034 (040610)	SW8270	3-Nitroaniline	<2.0	ug/l	R	MSD Recovery	1
LD09009	G4MW034 (040610)	SW8270	p-Chloroaniline	<1.0	ug/l	R	MSD Recovery	1
LD09009	G4MW034 (040610)	SW8270	Naphthalene	<1.0	ug/l	UJ	MS Recovery	1
LD09009	G4MW035 (040610)	SW8260	Methylene Chloride	0.23	ug/l	UB	Blank Contamination	1
LD09009	G4MW035 (040610)	SW8260	Acetone	4.3	ug/l	UB	Blank Contamination	1
LD09009	G4MW036 (040610)	SW6010	Arsenic	0.0099	mg/l	UB	Blank Contamination	1
LD09009	G4MW036 (040610)	SW8260	Methylene Chloride	0.26	ug/l	UB	Blank Contamination	1
LD09009	G4MW036 (040610)	SW8260	Acetone	9.6	ug/l	UB	Blank Contamination	1
LD09009	Trip Blank (040810)	SW8260	Methylene Chloride	0.25	ug/l	UB	Blank Contamination	1
LD09009	Trip Blank (040810)	SW8260	Acetone	2.2	ug/l	UB	Blank Contamination	1
LD09018	DUP01 (040810)	SW6010	Arsenic	0.016	mg/l	UB	Blank Contamination	1

SDG	Sample ID	Method	Analyte	Result	Units	Qualifier	Reason	Dilution
LD09018	DUP01 (040810)	SW8260	Bromomethane	<0.50	ug/l	UJ	LCS/LCSD RPD	1
LD09018	DUP01 (040810)	SW8260	Trichloroethylene	4.3	ug/l	J	FD RPD	1
LD09018	DUP01 (040810)	SW8270	Benzo(b)fluoranthene	<1.0	ug/l	UJ	LCS Recovery	1
LD09018	DUP01 (040810)	SW8270	Anthracene	<1.0	ug/l	UJ	LCS Recovery	1
LD09018	DUP01 (040810)	SW8270	Pyrene	<1.0	ug/l	UJ	LCS Recovery	1
LD09018	DUP01 (040810)	SW8270	Benzo(g,h,i)perylene	<1.0	ug/l	UJ	LCS Recovery	1
LD09018	DUP01 (040810)	SW8270	Indeno(1,2,3-cd)pyrene	<1.0	ug/l	UJ	LCS Recovery	1
LD09018	DUP01 (040810)	SW8270	Fluoranthene	<1.0	ug/l	UJ	LCS Recovery	1
LD09018	DUP01 (040810)	SW8270	1,2-Benz-phenanthracene	<1.0	ug/l	UJ	LCS Recovery	1
LD09018	DUP01 (040810)	SW8270	Benzo(a)pyrene	<1.0	ug/l	UJ	LCS Recovery	1
LD09018	DUP01 (040810)	SW8270	Benzyl Butyl Phthalate	<5.0	ug/l	UJ	LCS Recovery	1
LD09018	DUP01 (040810)	SW8270	Phenanthrene	<1.0	ug/l	UJ	LCS Recovery	1
LD09018	DUP01 (040810)	SW8270	Acenaphthene	<1.0	ug/l	UJ	LCS Recovery	1
LD09018	DUP01 (040810)	SW8270	Dibenzo(a,h)anthracene	<1.0	ug/l	UJ	LCS Recovery	1
LD09018	DUP01 (040810)	SW8270	Benzo(a)anthracene	<1.0	ug/l	UJ	LCS Recovery	1

SDG	Sample ID	Method	Analyte	Result	Units	Qualifier	Reason	Dilution
LD09018	DUP01 (040810)	SW8270	4-Bromophenyl Phenyl Ether	<1.0	ug/l	UJ	LCS Recovery	1
LD09018	DUP-4 (040710)	SW8260	Methylene Chloride	0.26	ug/l	UB	Blank Contamination	1
LD09018	F39SED01 (040810)	SW6010	Selenium	0.35	mg/kg	UB	Blank Contamination	1
LD09018	F39SED01 (040810)	SW8270	2,4-Dinitrophenol	<450.0	ug/kg	UJ	MS/MSD RPD	1
LD09018	F39SED01 (040810)	SW8270	Hexachloroethane	<92.0	ug/kg	UJ	MS Recovery and MS/MSD RPD	1
LD09018	F39SED01 (040810)	SW8270	Hexachlorocyclopentadiene	<450.0	ug/kg	UJ	MS/MSD Recovery	1
LD09018	F39SED01 (040810)	SW8270	bis(2-chloroisopropyl) ether	<92.0	ug/kg	UJ	MS/MSD RPD	1
LD09018	F39SED01 (040810)	SW8270	Pyrene	<92.0	ug/kg	UJ	MS/MSD RPD	1
LD09018	F39SED01 (040810)	SW8270	bis(2-Chloroethoxy) ether	<92.0	ug/kg	UJ	MS/MSD RPD	1
LD09018	F39SED01 (040810)	SW8270	1,2-Benz-phenanthracene	<92.0	ug/kg	UJ	MS/MSD RPD	1
LD09018	F39SED01 (040810)	SW8270	Hexachloro-1,3-Butadiene	<92.0	ug/kg	UJ	MS/MSD RPD	1
LD09018	F39SED02 (040810)	SW6010	Cadmium	0.11	mg/kg	UB	Blank Contamination	1
LD09018	F39SED02 (040810)	SW6010	Selenium	0.4	mg/kg	UB	Blank Contamination	1
LD09018	F39SED03 (040810)	SW6010	Cadmium	0.096	mg/kg	UB	Blank Contamination	1
LD09018	F39SED03 (040810)	SW6010	Selenium	0.51	mg/kg	UB	Blank Contamination	1

SDG	Sample ID	Method	Analyte	Result	Units	Qualifier	Reason	Dilution
LD09018	F39SED04 (040810)	SW6010	Cadmium	0.053	mg/kg	UB	Blank Contamination	1
LD09018	F39SED04 (040810)	SW6010	Selenium	0.26	mg/kg	UB	Blank Contamination	1
LD09018	F39SED05 (040810)	SW6010	Selenium	0.21	mg/kg	UB	Blank Contamination	1
LD09018	F39SED05 (040810)	SW6010	Cadmium	0.033	mg/kg	UB	Blank Contamination	1
LD09018	F39SED06 (040810)	SW6010	Cadmium	0.11	mg/kg	UB	Blank Contamination	1
LD09018	F39SED06 (040810)	SW6010	Selenium	0.33	mg/kg	UB	Blank Contamination	1
LD09018	F39SED07 (040810)	SW6010	Cadmium	0.087	mg/kg	UB	Blank Contamination	1
LD09018	F39SED08 (040810)	SW6010	Selenium	1	mg/kg	UB	Blank Contamination	1
LD09018	F39SW-01 (040810)	SW6010	Silver	0.0005	mg/l	UB	Blank Contamination	1
LD09018	F39SW-01 (040810)	SW8260	Trichloroethylene	1.5	ug/l	J	FD RPD	1
LD09018	F39SW-01 (040810)	SW8260	Acetone	1.7	ug/l	UB	Blank Contamination	1
LD09018	F39SW-01 (040810)	SW8260	Methylene Chloride	0.23	ug/l	UB	Blank Contamination	1
LD09018	F39SW-01 (040810)	SW8260	Bromomethane	<0.50	ug/l	UJ	LCS/LCSD RPD	1
LD09018	F39SW-01 (040810)	SW8270	Benzyl Butyl Phthalate	<5.0	ug/l	UJ	LCS Recovery	1
LD09018	F39SW-01 (040810)	SW8270	Benzo(a)anthracene	<1.0	ug/l	UJ	LCS Recovery	1

SDG	Sample ID	Method	Analyte	Result	Units	Qualifier	Reason	Dilution
LD09018	F39SW-01 (040810)	SW8270	N-Nitroso di-n-propylamine	<1.0	ug/l	UJ	MS/MSD RPD	1
LD09018	F39SW-01 (040810)	SW8270	Hexachloroethane	<1.0	ug/l	UJ	MS/MSD RPD	1
LD09018	F39SW-01 (040810)	SW8270	Acenaphthene	<1.0	ug/l	UJ	LCS Recovery	1
LD09018	F39SW-01 (040810)	SW8270	Pyrene	<1.0	ug/l	UJ	LCS Recovery	1
LD09018	F39SW-01 (040810)	SW8270	Dibenzo(a,h)anthracene	<1.0	ug/l	UJ	LCS Recovery and MS/MSD RPD	1
LD09018	F39SW-01 (040810)	SW8270	N-Nitrosodiphenylamine	<1.0	ug/l	UJ	MS/MSD RPD	1
LD09018	F39SW-01 (040810)	SW8270	Carbazole	<1.0	ug/l	UJ	LCS Recovery and MS/MSD RPD	1
LD09018	F39SW-01 (040810)	SW8270	2-Chlorophenol	<1.0	ug/l	UJ	MS/MSD RPD	1
LD09018	F39SW-01 (040810)	SW8270	Nitrobenzene	<1.0	ug/l	UJ	MS/MSD RPD	1
LD09018	F39SW-01 (040810)	SW8270	3-Nitroaniline	<2.0	ug/l	R	LCS Recovery	1
LD09018	F39SW-01 (040810)	SW8270	Phenanthrene	<1.0	ug/l	UJ	LCS Recovery	1
LD09018	F39SW-01 (040810)	SW8270	p-Nitroaniline	<2.0	ug/l	UJ	MS/MSD RPD	1
LD09018	F39SW-01 (040810)	SW8270	1,2-Benz-phenanthracene	<1.0	ug/l	UJ	LCS Recovery	1
LD09018	F39SW-01 (040810)	SW8270	Benzo(k)fluoranthene	<1.0	ug/l	UJ	MS/MSD RPD	1
LD09018	F39SW-01 (040810)	SW8270	Fluoranthene	<1.0	ug/l	UJ	LCS Recovery	1

SDG	Sample ID	Method	Analyte	Result	Units	Qualifier	Reason	Dilution
LD09018	F39SW-01 (040810)	SW8270	Benzo(b)fluoranthene	<1.0	ug/l	UJ	LCS Recovery and MS/MSD RPD	1
LD09018	F39SW-01 (040810)	SW8270	Benzo(g,h,i)perylene	<1.0	ug/l	UJ	LCS Recovery and MS/MSD RPD	1
LD09018	F39SW-01 (040810)	SW8270	Anthracene	<1.0	ug/l	UJ	LCS Recovery	1
LD09018	F39SW-01 (040810)	SW8270	Di-n-octyl phthalate	<5.0	ug/l	UJ	MS/MSD RPD	1
LD09018	F39SW-01 (040810)	SW8270	bis(2-Chloroethoxy)methane	<1.0	ug/l	UJ	LCS Recovery and MS/MSD RPD	1
LD09018	F39SW-01 (040810)	SW8270	p-Chloroaniline	<1.0	ug/l	R	LCS Recovery	1
LD09018	F39SW-01 (040810)	SW8270	4-Bromophenyl Phenyl Ether	<1.0	ug/l	UJ	LCS Recovery	1
LD09018	F39SW-01 (040810)	SW8270	Benzo(a)pyrene	<1.0	ug/l	UJ	LCS Recovery and MS/MSD RPD	1
LD09018	F39SW-01 (040810)	SW8270	Indeno(1,2,3-cd)pyrene	<1.0	ug/l	UJ	LCS Recovery and MS/MSD RPD	1
LD09018	F39SW-02 (040810)	SW6010	Arsenic	0.006	mg/l	UB	Blank Contamination	1
LD09018	F39SW-02 (040810)	SW6010	Silver	0.0011	mg/l	UB	Blank Contamination	1
LD09018	F39SW-02 (040810)	SW8260	Acetone	4	ug/l	UB	Blank Contamination	1
LD09018	F39SW-02 (040810)	SW8260	Bromomethane	<0.50	ug/l	UJ	LCS/LCSD RPD	1
LD09018	F39SW-02 (040810)	SW8260	Methylene Chloride	0.22	ug/l	UB	Blank Contamination	1
LD09018	F39SW-02 (040810)	SW8270	Benzo(a)pyrene	<1.0	ug/l	UJ	LCS Recovery	1

SDG	Sample ID	Method	Analyte	Result	Units	Qualifier	Reason	Dilution
LD09018	F39SW-02 (040810)	SW8270	Pyrene	<1.0	ug/l	UJ	LCS Recovery	1
LD09018	F39SW-02 (040810)	SW8270	Benzyl Butyl Phthalate	<5.0	ug/l	UJ	LCS Recovery	1
LD09018	F39SW-02 (040810)	SW8270	Phenanthrene	<1.0	ug/l	UJ	LCS Recovery	1
LD09018	F39SW-02 (040810)	SW8270	Acenaphthene	<1.0	ug/l	UJ	LCS Recovery	1
LD09018	F39SW-02 (040810)	SW8270	Benzo(a)anthracene	<1.0	ug/l	UJ	LCS Recovery	1
LD09018	F39SW-02 (040810)	SW8270	Dibenzo(a,h)anthracene	<1.0	ug/l	UJ	LCS Recovery	1
LD09018	F39SW-02 (040810)	SW8270	Anthracene	<1.0	ug/l	UJ	LCS Recovery	1
LD09018	F39SW-02 (040810)	SW8270	Fluoranthene	<1.0	ug/l	UJ	LCS Recovery	1
LD09018	F39SW-02 (040810)	SW8270	Benzo(b)fluoranthene	<1.0	ug/l	UJ	LCS Recovery	1
LD09018	F39SW-02 (040810)	SW8270	4-Bromophenyl Phenyl Ether	<1.0	ug/l	UJ	LCS Recovery	1
LD09018	F39SW-02 (040810)	SW8270	Benzo(g,h,i)perylene	<1.0	ug/l	UJ	LCS Recovery	1
LD09018	F39SW-02 (040810)	SW8270	Indeno(1,2,3-cd)pyrene	<1.0	ug/l	UJ	LCS Recovery	1
LD09018	F39SW-02 (040810)	SW8270	1,2-Benz-phenanthracene	<1.0	ug/l	UJ	LCS Recovery	1
LD09018	F39SW-03 (040810)	SW8260	Bromomethane	<0.50	ug/l	UJ	LCS/LCSD RPD	1
LD09018	F39SW-03 (040810)	SW8260	Acetone	5.9	ug/l	UB	Blank Contamination	1

SDG	Sample ID	Method	Analyte	Result	Units	Qualifier	Reason	Dilution
LD09018	F39SW-03 (040810)	SW8260	Methylene Chloride	0.2	ug/l	UB	Blank Contamination	1
LD09018	F39SW-03 (040810)	SW8270	Benzo(a)pyrene	<1.0	ug/l	UJ	LCS Recovery	1
LD09018	F39SW-03 (040810)	SW8270	Phenanthrene	<1.0	ug/l	UJ	LCS Recovery	1
LD09018	F39SW-03 (040810)	SW8270	Acenaphthene	<1.0	ug/l	UJ	LCS Recovery	1
LD09018	F39SW-03 (040810)	SW8270	Benzo(a)anthracene	<1.0	ug/l	UJ	LCS Recovery	1
LD09018	F39SW-03 (040810)	SW8270	Dibenzo(a,h)anthracene	<1.0	ug/l	UJ	LCS Recovery	1
LD09018	F39SW-03 (040810)	SW8270	Benzyl Butyl Phthalate	<5.0	ug/l	UJ	LCS Recovery	1
LD09018	F39SW-03 (040810)	SW8270	Fluoranthene	<1.0	ug/l	UJ	LCS Recovery	1
LD09018	F39SW-03 (040810)	SW8270	Benzo(b)fluoranthene	<1.0	ug/l	UJ	LCS Recovery	1
LD09018	F39SW-03 (040810)	SW8270	Indeno(1,2,3-cd)pyrene	<1.0	ug/l	UJ	LCS Recovery	1
LD09018	F39SW-03 (040810)	SW8270	Benzo(g,h,i)perylene	<1.0	ug/l	UJ	LCS Recovery	1
LD09018	F39SW-03 (040810)	SW8270	Pyrene	<1.0	ug/l	UJ	LCS Recovery	1
LD09018	F39SW-03 (040810)	SW8270	4-Bromophenyl Phenyl Ether	<1.0	ug/l	UJ	LCS Recovery	1
LD09018	F39SW-03 (040810)	SW8270	Anthracene	<1.0	ug/l	UJ	LCS Recovery	1
LD09018	F39SW-03 (040810)	SW8270	1,2-Benz-phenanthracene	<1.0	ug/l	UJ	LCS Recovery	1

SDG	Sample ID	Method	Analyte	Result	Units	Qualifier	Reason	Dilution
LD09018	F39SW-04 (040810)	SW6010	Arsenic	0.017	mg/l	UB	Blank Contamination	1
LD09018	F39SW-04 (040810)	SW8260	Acetone	3.8	ug/l	UB	Blank Contamination	1
LD09018	F39SW-04 (040810)	SW8260	Bromomethane	<0.50	ug/l	UJ	LCS/LCSD RPD	1
LD09018	F39SW-04 (040810)	SW8260	Methylene Chloride	0.22	ug/l	UB	Blank Contamination	1
LD09018	F39SW-04 (040810)	SW8270	Benzo(a)pyrene	<1.0	ug/l	UJ	LCS Recovery	1
LD09018	F39SW-04 (040810)	SW8270	Benzyl Butyl Phthalate	<5.0	ug/l	UJ	LCS Recovery	1
LD09018	F39SW-04 (040810)	SW8270	Phenanthrene	<1.0	ug/l	UJ	LCS Recovery	1
LD09018	F39SW-04 (040810)	SW8270	Acenaphthene	<1.0	ug/l	UJ	LCS Recovery	1
LD09018	F39SW-04 (040810)	SW8270	Pyrene	<1.0	ug/l	UJ	LCS Recovery	1
LD09018	F39SW-04 (040810)	SW8270	Benzo(a)anthracene	<1.0	ug/l	UJ	LCS Recovery	1
LD09018	F39SW-04 (040810)	SW8270	Dibenzo(a,h)anthracene	<1.0	ug/l	UJ	LCS Recovery	1
LD09018	F39SW-04 (040810)	SW8270	1,2-Benz-phenanthracene	<1.0	ug/l	UJ	LCS Recovery	1
LD09018	F39SW-04 (040810)	SW8270	Fluoranthene	<1.0	ug/l	UJ	LCS Recovery	1
LD09018	F39SW-04 (040810)	SW8270	Benzo(b)fluoranthene	<1.0	ug/l	UJ	LCS Recovery	1
LD09018	F39SW-04 (040810)	SW8270	Benzo(g,h,i)perylene	<1.0	ug/l	UJ	LCS Recovery	1

SDG	Sample ID	Method	Analyte	Result	Units	Qualifier	Reason	Dilution
LD09018	F39SW-04 (040810)	SW8270	Anthracene	<1.0	ug/l	UJ	LCS Recovery	1
LD09018	F39SW-04 (040810)	SW8270	4-Bromophenyl Phenyl Ether	<1.0	ug/l	UJ	LCS Recovery	1
LD09018	F39SW-04 (040810)	SW8270	Indeno(1,2,3-cd)pyrene	<1.0	ug/l	UJ	LCS Recovery	1
LD09018	F39SW-05 (040810)	SW6010	Arsenic	0.019	mg/l	UB	Blank Contamination	1
LD09018	F39SW-05 (040810)	SW8260	Acetone	7.5	ug/l	UB	Blank Contamination	1
LD09018	F39SW-05 (040810)	SW8260	Methylene Chloride	0.25	ug/l	UB	Blank Contamination	1
LD09018	F39SW-05 (040810)	SW8260	Bromomethane	<0.50	ug/l	UJ	LCS/LCSD RPD	1
LD09018	F39SW-05 (040810)	SW8270	1,2-Benz-phenanthracene	<1.0	ug/l	UJ	LCS Recovery	1
LD09018	F39SW-05 (040810)	SW8270	Benzyl Butyl Phthalate	<5.0	ug/l	UJ	LCS Recovery	1
LD09018	F39SW-05 (040810)	SW8270	Phenanthrene	<1.0	ug/l	UJ	LCS Recovery	1
LD09018	F39SW-05 (040810)	SW8270	Acenaphthene	<1.0	ug/l	UJ	LCS Recovery	1
LD09018	F39SW-05 (040810)	SW8270	Benzo(a)anthracene	<1.0	ug/l	UJ	LCS Recovery	1
LD09018	F39SW-05 (040810)	SW8270	Benzo(a)pyrene	<1.0	ug/l	UJ	LCS Recovery	1
LD09018	F39SW-05 (040810)	SW8270	Fluoranthene	<1.0	ug/l	UJ	LCS Recovery	1
LD09018	F39SW-05 (040810)	SW8270	Benzo(b)fluoranthene	<1.0	ug/l	UJ	LCS Recovery	1

SDG	Sample ID	Method	Analyte	Result	Units	Qualifier	Reason	Dilution
LD09018	F39SW-05 (040810)	SW8270	Indeno(1,2,3-cd)pyrene	<1.0	ug/l	UJ	LCS Recovery	1
LD09018	F39SW-05 (040810)	SW8270	Benzo(g,h,i)perylene	<1.0	ug/l	UJ	LCS Recovery	1
LD09018	F39SW-05 (040810)	SW8270	Pyrene	<1.0	ug/l	UJ	LCS Recovery	1
LD09018	F39SW-05 (040810)	SW8270	Anthracene	<1.0	ug/l	UJ	LCS Recovery	1
LD09018	F39SW-05 (040810)	SW8270	4-Bromophenyl Phenyl Ether	<1.0	ug/l	UJ	LCS Recovery	1
LD09018	F39SW-05 (040810)	SW8270	Dibenzo(a,h)anthracene	<1.0	ug/l	UJ	LCS Recovery	1
LD09018	F39SW-06 (040810)	SW6010	Arsenic	0.019	mg/l	UB	Blank Contamination	1
LD09018	F39SW-06 (040810)	SW8260	Bromomethane	<0.50	ug/l	UJ	LCS/LCSD RPD	1
LD09018	F39SW-06 (040810)	SW8260	Methylene Chloride	0.21	ug/l	UB	Blank Contamination	1
LD09018	F39SW-06 (040810)	SW8270	1,2-Benz-phenanthracene	<1.0	ug/l	UJ	LCS Recovery	1
LD09018	F39SW-06 (040810)	SW8270	Benzyl Butyl Phthalate	<5.0	ug/l	UJ	LCS Recovery	1
LD09018	F39SW-06 (040810)	SW8270	Phenanthrene	<1.0	ug/l	UJ	LCS Recovery	1
LD09018	F39SW-06 (040810)	SW8270	Acenaphthene	<1.0	ug/l	UJ	LCS Recovery	1
LD09018	F39SW-06 (040810)	SW8270	Benzo(a)anthracene	<1.0	ug/l	UJ	LCS Recovery	1
LD09018	F39SW-06 (040810)	SW8270	4-Bromophenyl Phenyl Ether	<1.0	ug/l	UJ	LCS Recovery	1

SDG	Sample ID	Method	Analyte	Result	Units	Qualifier	Reason	Dilution
LD09018	F39SW-06 (040810)	SW8270	Benzo(a)pyrene	<1.0	ug/l	UJ	LCS Recovery	1
LD09018	F39SW-06 (040810)	SW8270	Fluoranthene	<1.0	ug/l	UJ	LCS Recovery	1
LD09018	F39SW-06 (040810)	SW8270	Benzo(b)fluoranthene	<1.0	ug/l	UJ	LCS Recovery	1
LD09018	F39SW-06 (040810)	SW8270	Indeno(1,2,3-cd)pyrene	<1.0	ug/l	UJ	LCS Recovery	1
LD09018	F39SW-06 (040810)	SW8270	Benzo(g,h,i)perylene	<1.0	ug/l	UJ	LCS Recovery	1
LD09018	F39SW-06 (040810)	SW8270	Pyrene	<1.0	ug/l	UJ	LCS Recovery	1
LD09018	F39SW-06 (040810)	SW8270	Anthracene	<1.0	ug/l	UJ	LCS Recovery	1
LD09018	F39SW-06 (040810)	SW8270	Dibenzo(a,h)anthracene	<1.0	ug/l	UJ	LCS Recovery	1
LD09018	F39SW-07 (040810)	SW8260	Bromomethane	<0.50	ug/l	UJ	LCS/LCSD RPD	1
LD09018	F39SW-07 (040810)	SW8260	Acetone	7.6	ug/l	UB	Blank Contamination	1
LD09018	F39SW-07 (040810)	SW8260	Methylene Chloride	0.22	ug/l	UB	Blank Contamination	1
LD09018	F39SW-07 (040810)	SW8270	Fluoranthene	<1.0	ug/l	UJ	LCS Recovery	1
LD09018	F39SW-07 (040810)	SW8270	Phenanthrene	<1.0	ug/l	UJ	LCS Recovery	1
LD09018	F39SW-07 (040810)	SW8270	Acenaphthene	<1.0	ug/l	UJ	LCS Recovery	1
LD09018	F39SW-07 (040810)	SW8270	Benzo(a)anthracene	<1.0	ug/l	UJ	LCS Recovery	1

SDG	Sample ID	Method	Analyte	Result	Units	Qualifier	Reason	Dilution
LD09018	F39SW-07 (040810)	SW8270	Dibenzo(a,h)anthracene	<1.0	ug/l	UJ	LCS Recovery	1
LD09018	F39SW-07 (040810)	SW8270	4-Bromophenyl Phenyl Ether	<1.0	ug/l	UJ	LCS Recovery	1
LD09018	F39SW-07 (040810)	SW8270	1,2-Benz-phenanthracene	<1.0	ug/l	UJ	LCS Recovery	1
LD09018	F39SW-07 (040810)	SW8270	Benzyl Butyl Phthalate	<5.0	ug/l	UJ	LCS Recovery	1
LD09018	F39SW-07 (040810)	SW8270	Benzo(b)fluoranthene	<1.0	ug/l	UJ	LCS Recovery	1
LD09018	F39SW-07 (040810)	SW8270	Indeno(1,2,3-cd)pyrene	<1.0	ug/l	UJ	LCS Recovery	1
LD09018	F39SW-07 (040810)	SW8270	Benzo(g,h,i)perylene	<1.0	ug/l	UJ	LCS Recovery	1
LD09018	F39SW-07 (040810)	SW8270	Pyrene	<1.0	ug/l	UJ	LCS Recovery	1
LD09018	F39SW-07 (040810)	SW8270	Anthracene	<1.0	ug/l	UJ	LCS Recovery	1
LD09018	F39SW-07 (040810)	SW8270	Benzo(a)pyrene	<1.0	ug/l	UJ	LCS Recovery	1
LD09018	F39TW05 (10-15)	SW8260	Bromomethane	<0.50	ug/l	UJ	LCS/LCSD RPD	1
LD09018	F39TW05 (10-15)	SW8260	Methylene Chloride	0.24	ug/l	UB	Blank Contamination	1
LD09018	F39TW05 (20-25)	SW8260	Methylene Chloride	0.23	ug/l	UB	Blank Contamination	1
LD09018	F39TW05 (30-35)	SW8260	Methylene Chloride	0.24	ug/l	UB	Blank Contamination	1
LD09018	F39TW05 (40-45)	SW8260	Methylene Chloride	0.23	ug/l	UB	Blank Contamination	1

SDG	Sample ID	Method	Analyte	Result	Units	Qualifier	Reason	Dilution
LD09018	F39TW06 (10-15)	SW8260	Methylene Chloride	0.22	ug/l	UB	Blank Contamination	1
LD09018	F39TW06 (20-25)	SW8260	Methylene Chloride	0.37	ug/l	UB	Blank Contamination	1
LD09018	F39TW06 (30-35)	SW8260	Methylene Chloride	0.24	ug/l	UB	Blank Contamination	1
LD09018	F39TW06 (40-45)	SW8260	Bromomethane	<1.0	ug/l	UJ	LCS/LCSD RPD	2
LD09018	F39TW06 (40-45)	SW8260	Methylene Chloride	0.59	ug/l	UB	Blank Contamination	2
LD09018	F39TW06 (40-45)	SW8270	4-Chlorophenyl Phenyl Ether	<10.0	ug/l	UJ	Holding Time	1
LD09018	F39TW06 (40-45)	SW8270	bis(2-Chloroethoxy) ether	<10.0	ug/l	UJ	Holding Time	1
LD09018	F39TW06 (40-45)	SW8270	p-Nitroaniline	<20.0	ug/l	UJ	Holding Time	1
LD09018	F39TW06 (40-45)	SW8270	Benzaldehyde	<50.0	ug/l	UJ	Holding Time	1
LD09018	F39TW06 (40-45)	SW8270	4-Bromophenyl Phenyl Ether	<10.0	ug/l	UJ	Holding Time	1
LD09018	F39TW06 (40-45)	SW8270	Caprolactam	<50.0	ug/l	UJ	Holding Time	1
LD09018	F39TW06 (40-45)	SW8270	p-Chloroaniline	<10.0	ug/l	UJ	Holding Time	1
LD09018	F39TW06 (40-45)	SW8270	bis(2-chloroisopropyl) ether	<10.0	ug/l	UJ	Holding Time	1
LD09018	F39TW06 (40-45)	SW8270	Naphthalene	<10.0	ug/l	UJ	Holding Time	1
LD09018	F39TW06 (40-45)	SW8270	Acenaphthene	<10.0	ug/l	UJ	Holding Time	1

SDG	Sample ID	Method	Analyte	Result	Units	Qualifier	Reason	Dilution
LD09018	F39TW06 (40-45)	SW8270	bis(2-Chloroethoxy)methane	<10.0	ug/l	UJ	Holding Time	1
LD09018	F39TW06 (40-45)	SW8270	Di-n-butyl phthalate	<50.0	ug/l	UJ	Holding Time	1
LD09018	F39TW06 (40-45)	SW8270	Phenanthrene	<10.0	ug/l	UJ	Holding Time	1
LD09018	F39TW06 (40-45)	SW8270	Benzyl Butyl Phthalate	<50.0	ug/l	UJ	Holding Time	1
LD09018	F39TW06 (40-45)	SW8270	N-Nitrosodiphenylamine	<10.0	ug/l	UJ	Holding Time	1
LD09018	F39TW06 (40-45)	SW8270	Fluorene	<10.0	ug/l	UJ	Holding Time	1
LD09018	F39TW06 (40-45)	SW8270	Carbazole	<10.0	ug/l	UJ	Holding Time	1
LD09018	F39TW06 (40-45)	SW8270	Hexachlorocyclopentadiene	<50.0	ug/l	UJ	Holding Time	1
LD09018	F39TW06 (40-45)	SW8270	2-Nitroaniline	<20.0	ug/l	UJ	Holding Time	1
LD09018	F39TW06 (40-45)	SW8270	3,5,5-Trimethyl-2-cyclohexene-1-one	<10.0	ug/l	UJ	Holding Time	1
LD09018	F39TW06 (40-45)	SW8270	2-Methyl naphthalene	<10.0	ug/l	UJ	Holding Time	1
LD09018	F39TW06 (40-45)	SW8270	2-Chloronaphthalene	<10.0	ug/l	UJ	Holding Time	1
LD09018	F39TW06 (40-45)	SW8270	3,3'-Dichlorobenzidine	<50.0	ug/l	UJ	Holding Time	1
LD09018	F39TW06 (40-45)	SW8270	1,1'-Biphenyl	<10.0	ug/l	UJ	Holding Time	1
LD09018	F39TW06 (40-45)	SW8270	Acetophenone	<10.0	ug/l	UJ	Holding Time	1

SDG	Sample ID	Method	Analyte	Result	Units	Qualifier	Reason	Dilution
LD09018	F39TW06 (40-45)	SW8270	Nitrobenzene	<10.0	ug/l	UJ	Holding Time	1
LD09018	F39TW06 (40-45)	SW8270	3-Nitroaniline	<20.0	ug/l	UJ	Holding Time	1
LD09018	F39TW06 (40-45)	SW8270	N-Nitroso di-n-propylamine	<10.0	ug/l	UJ	Holding Time	1
LD09018	F39TW06 (40-45)	SW8270	Hexachloro-1,3-Butadiene	<10.0	ug/l	UJ	Holding Time	1
LD09018	F39TW06 (40-45)	SW8270	Benzo(g,h,i)perylene	<10.0	ug/l	UJ	Holding Time	1
LD09018	F39TW06 (40-45)	SW8270	bis(2-Ethylhexyl)phthalate	<50.0	ug/l	UJ	Holding Time	1
LD09018	F39TW06 (40-45)	SW8270	Di-n-octyl phthalate	<50.0	ug/l	UJ	Holding Time	1
LD09018	F39TW06 (40-45)	SW8270	Hexachlorobenzene	<10.0	ug/l	UJ	Holding Time	1
LD09018	F39TW06 (40-45)	SW8270	Anthracene	<10.0	ug/l	UJ	Holding Time	1
LD09018	F39TW06 (40-45)	SW8270	2,4-Dinitrotoluene	<20.0	ug/l	UJ	Holding Time	1
LD09018	F39TW06 (40-45)	SW8270	Pyrene	<10.0	ug/l	UJ	Holding Time	1
LD09018	F39TW06 (40-45)	SW8270	Dimethyl Phthalate	<50.0	ug/l	UJ	Holding Time	1
LD09018	F39TW06 (40-45)	SW8270	Diethyl phthalate	<50.0	ug/l	UJ	Holding Time	1
LD09018	F39TW06 (40-45)	SW8270	Atrazine	<10.0	ug/l	UJ	Holding Time	1
LD09018	F39TW06 (40-45)	SW8270	Hexachloroethane	<10.0	ug/l	UJ	Holding Time	1

SDG	Sample ID	Method	Analyte	Result	Units	Qualifier	Reason	Dilution
LD09018	F39TW06 (40-45)	SW8270	Dibenzo(a,h)anthracene	<10.0	ug/l	UJ	Holding Time	1
LD09018	F39TW06 (40-45)	SW8270	2,6-Dinitroluene	<20.0	ug/l	UJ	Holding Time	1
LD09018	F39TW06 (40-45)	SW8270	Dibenzofuran	<10.0	ug/l	UJ	Holding Time	1
LD09018	F39TW06 (40-45)	SW8270	Benzo(a)anthracene	<10.0	ug/l	UJ	Holding Time	1
LD09018	F39TW06 (40-45)	SW8270	Indeno(1,2,3-cd)pyrene	<10.0	ug/l	UJ	Holding Time	1
LD09018	F39TW06 (40-45)	SW8270	Benzo(a)pyrene	<10.0	ug/l	UJ	Holding Time	1
LD09018	F39TW06 (40-45)	SW8270	1,2-Benz-phenanthracene	<10.0	ug/l	UJ	Holding Time	1
LD09018	F39TW06 (40-45)	SW8270	Acenaphthylene	<10.0	ug/l	UJ	Holding Time	1
LD09018	F39TW06 (40-45)	SW8270	Benzo(k)fluoranthene	<10.0	ug/l	UJ	Holding Time	1
LD09018	F39TW06 (40-45)	SW8270	Fluoranthene	<10.0	ug/l	UJ	Holding Time	1
LD09018	F39TW06 (40-45)	SW8270	Benzo(b)fluoranthene	<10.0	ug/l	UJ	Holding Time	1
LD09018	F39TW07 (10-15)	SW8260	Methylene Chloride	0.25	ug/l	UB	Blank Contamination	1
LD09018	F39TW07 (20-25)	SW8260	Acetone	10	ug/l	UB	Blank Contamination	1
LD09018	F39TW07 (20-25)	SW8260	Bromomethane	<0.50	ug/l	UJ	LCS/LCSD RPD	1
LD09018	F39TW07 (20-25)	SW8260	Methylene Chloride	0.34	ug/l	UB	Blank Contamination	1

SDG	Sample ID	Method	Analyte	Result	Units	Qualifier	Reason	Dilution
LD09018	F39TW07 (30-35)	SW8260	Acetone	4.8	ug/l	UB	Blank Contamination	1
LD09018	F39TW07 (30-35)	SW8260	Methylene Chloride	0.23	ug/l	UB	Blank Contamination	1
LD09018	F39TW07 (40-45)	SW8260	Methylene Chloride	0.27	ug/l	UB	Blank Contamination	1
LD09018	F39TW08 (10-15)	SW8260	Acetone	6	ug/l	UB	Blank Contamination	1
LD09018	F39TW08 (10-15)	SW8260	Methylene Chloride	0.23	ug/l	UB	Blank Contamination	1
LD09018	F39TW08 (10-15)	SW8270	Phenanthrene	<1.0	ug/l	UJ	LCS Recovery	1
LD09018	F39TW08 (10-15)	SW8270	Benzyl Butyl Phthalate	<5.1	ug/l	UJ	LCS Recovery	1
LD09018	F39TW08 (10-15)	SW8270	Acenaphthene	<1.0	ug/l	UJ	LCS Recovery	1
LD09018	F39TW08 (10-15)	SW8270	Benzo(a)anthracene	<1.0	ug/l	UJ	LCS Recovery	1
LD09018	F39TW08 (10-15)	SW8270	Dibenzo(a,h)anthracene	<1.0	ug/l	UJ	LCS Recovery	1
LD09018	F39TW08 (10-15)	SW8270	Benzo(a)pyrene	<1.0	ug/l	UJ	LCS Recovery	1
LD09018	F39TW08 (10-15)	SW8270	Fluoranthene	<1.0	ug/l	UJ	LCS Recovery	1
LD09018	F39TW08 (10-15)	SW8270	Benzo(b)fluoranthene	<1.0	ug/l	UJ	LCS Recovery	1
LD09018	F39TW08 (10-15)	SW8270	Indeno(1,2,3-cd)pyrene	<1.0	ug/l	UJ	LCS Recovery	1
LD09018	F39TW08 (10-15)	SW8270	Benzo(g,h,i)perylene	<1.0	ug/l	UJ	LCS Recovery	1

SDG	Sample ID	Method	Analyte	Result	Units	Qualifier	Reason	Dilution
LD09018	F39TW08 (10-15)	SW8270	4-Bromophenyl Phenyl Ether	<1.0	ug/l	UJ	LCS Recovery	1
LD09018	F39TW08 (10-15)	SW8270	Pyrene	<1.0	ug/l	UJ	LCS Recovery	1
LD09018	F39TW08 (10-15)	SW8270	Anthracene	<1.0	ug/l	UJ	LCS Recovery	1
LD09018	F39TW08 (10-15)	SW8270	1,2-Benz-phenanthracene	<1.0	ug/l	UJ	LCS Recovery	1
LD09018	F39TW08 (20-25)	SW8260	Acetone	6.6	ug/l	UB	Blank Contamination	1
LD09018	F39TW08 (30-35)	SW8260	Acetone	8.3	ug/l	UB	Blank Contamination	1
LD09018	F39TW08 (30-35)	SW8260	Methylene Chloride	0.22	ug/l	UB	Blank Contamination	1
LD09018	F39TW08 (30-35)	SW8270	Acenaphthene	<10.0	ug/l	UJ	Holding Time	1
LD09018	F39TW08 (30-35)	SW8270	Di-n-butyl phthalate	<50.0	ug/l	UJ	Holding Time	1
LD09018	F39TW08 (30-35)	SW8270	Diethyl phthalate	<50.0	ug/l	UJ	Holding Time	1
LD09018	F39TW08 (30-35)	SW8270	Benzyl Butyl Phthalate	<50.0	ug/l	UJ	Holding Time	1
LD09018	F39TW08 (30-35)	SW8270	Phenanthrene	<10.0	ug/l	UJ	Holding Time	1
LD09018	F39TW08 (30-35)	SW8270	3,5,5-Trimethyl-2-cyclohexene-1-one	<10.0	ug/l	UJ	Holding Time	1
LD09018	F39TW08 (30-35)	SW8270	Hexachlorocyclopentadiene	<50.0	ug/l	UJ	Holding Time	1
LD09018	F39TW08 (30-35)	SW8270	4-Chlorophenyl Phenyl Ether	<10.0	ug/l	UJ	Holding Time	1

SDG	Sample ID	Method	Analyte	Result	Units	Qualifier	Reason	Dilution
LD09018	F39TW08 (30-35)	SW8270	N-Nitroso di-n-propylamine	<10.0	ug/l	UJ	Holding Time	1
LD09018	F39TW08 (30-35)	SW8270	N-Nitrosodiphenylamine	<10.0	ug/l	UJ	Holding Time	1
LD09018	F39TW08 (30-35)	SW8270	3-Nitroaniline	<20.0	ug/l	UJ	Holding Time	1
LD09018	F39TW08 (30-35)	SW8270	Hexachloroethane	<10.0	ug/l	UJ	Holding Time	1
LD09018	F39TW08 (30-35)	SW8270	Fluorene	<10.0	ug/l	UJ	Holding Time	1
LD09018	F39TW08 (30-35)	SW8270	Carbazole	<10.0	ug/l	UJ	Holding Time	1
LD09018	F39TW08 (30-35)	SW8270	Hexachloro-1,3-Butadiene	<10.0	ug/l	UJ	Holding Time	1
LD09018	F39TW08 (30-35)	SW8270	2-Nitroaniline	<20.0	ug/l	UJ	Holding Time	1
LD09018	F39TW08 (30-35)	SW8270	Naphthalene	<10.0	ug/l	UJ	Holding Time	1
LD09018	F39TW08 (30-35)	SW8270	2-Methyl naphthalene	<10.0	ug/l	UJ	Holding Time	1
LD09018	F39TW08 (30-35)	SW8270	2-Chloronaphthalene	<10.0	ug/l	UJ	Holding Time	1
LD09018	F39TW08 (30-35)	SW8270	3,3'-Dichlorobenzidine	<50.0	ug/l	UJ	Holding Time	1
LD09018	F39TW08 (30-35)	SW8270	1,1'-Biphenyl	<10.0	ug/l	UJ	Holding Time	1
LD09018	F39TW08 (30-35)	SW8270	Nitrobenzene	<10.0	ug/l	UJ	Holding Time	1
LD09018	F39TW08 (30-35)	SW8270	2,6-Dinitroluene	<20.0	ug/l	UJ	Holding Time	1

SDG	Sample ID	Method	Analyte	Result	Units	Qualifier	Reason	Dilution
LD09018	F39TW08 (30-35)	SW8270	bis(2-chloroisopropyl) ether	<10.0	ug/l	UJ	Holding Time	1
LD09018	F39TW08 (30-35)	SW8270	Acetophenone	<10.0	ug/l	UJ	Holding Time	1
LD09018	F39TW08 (30-35)	SW8270	Dimethyl Phthalate	<50.0	ug/l	UJ	Holding Time	1
LD09018	F39TW08 (30-35)	SW8270	4-Bromophenyl Phenyl Ether	<10.0	ug/l	UJ	Holding Time	1
LD09018	F39TW08 (30-35)	SW8270	Caprolactam	<50.0	ug/l	UJ	Holding Time	1
LD09018	F39TW08 (30-35)	SW8270	p-Chloroaniline	<10.0	ug/l	UJ	Holding Time	1
LD09018	F39TW08 (30-35)	SW8270	bis(2-Chloroethoxy)methane	<10.0	ug/l	UJ	Holding Time	1
LD09018	F39TW08 (30-35)	SW8270	bis(2-Chloroethoxy) ether	<10.0	ug/l	UJ	Holding Time	1
LD09018	F39TW08 (30-35)	SW8270	p-Nitroaniline	<20.0	ug/l	UJ	Holding Time	1
LD09018	F39TW08 (30-35)	SW8270	bis(2-Ethylhexyl)phthalate	<50.0	ug/l	UJ	Holding Time	1
LD09018	F39TW08 (30-35)	SW8270	Di-n-octyl phthalate	<50.0	ug/l	UJ	Holding Time	1
LD09018	F39TW08 (30-35)	SW8270	Hexachlorobenzene	<10.0	ug/l	UJ	Holding Time	1
LD09018	F39TW08 (30-35)	SW8270	Anthracene	<10.0	ug/l	UJ	Holding Time	1
LD09018	F39TW08 (30-35)	SW8270	Benzo(a)anthracene	<10.0	ug/l	UJ	Holding Time	1
LD09018	F39TW08 (30-35)	SW8270	Pyrene	<10.0	ug/l	UJ	Holding Time	1

SDG	Sample ID	Method	Analyte	Result	Units	Qualifier	Reason	Dilution
LD09018	F39TW08 (30-35)	SW8270	Benzaldehyde	<50.0	ug/l	UJ	Holding Time	1
LD09018	F39TW08 (30-35)	SW8270	Dibenzofuran	<10.0	ug/l	UJ	Holding Time	1
LD09018	F39TW08 (30-35)	SW8270	Atrazine	<10.0	ug/l	UJ	Holding Time	1
LD09018	F39TW08 (30-35)	SW8270	Benzo(g,h,i)perylene	<10.0	ug/l	UJ	Holding Time	1
LD09018	F39TW08 (30-35)	SW8270	Indeno(1,2,3-cd)pyrene	<10.0	ug/l	UJ	Holding Time	1
LD09018	F39TW08 (30-35)	SW8270	Benzo(b)fluoranthene	<10.0	ug/l	UJ	Holding Time	1
LD09018	F39TW08 (30-35)	SW8270	Fluoranthene	<10.0	ug/l	UJ	Holding Time	1
LD09018	F39TW08 (30-35)	SW8270	Benzo(k)fluoranthene	<10.0	ug/l	UJ	Holding Time	1
LD09018	F39TW08 (30-35)	SW8270	Acenaphthylene	<10.0	ug/l	UJ	Holding Time	1
LD09018	F39TW08 (30-35)	SW8270	1,2-Benz-phenanthracene	<10.0	ug/l	UJ	Holding Time	1
LD09018	F39TW08 (30-35)	SW8270	Benzo(a)pyrene	<10.0	ug/l	UJ	Holding Time	1
LD09018	F39TW08 (30-35)	SW8270	Dibenzo(a,h)anthracene	<10.0	ug/l	UJ	Holding Time	1
LD09018	F39TW08 (30-35)	SW8270	2,4-Dinitrotoluene	<20.0	ug/l	UJ	Holding Time	1
LD09018	F39TW08 (40-45)	SW8260	Bromomethane	<1.0	ug/l	UJ	LCS/LCSD RPD	2
LD09018	F39TW08 (40-45)	SW8260	Acetone	6.1	ug/l	UB	Blank Contamination	2

SDG	Sample ID	Method	Analyte	Result	Units	Qualifier	Reason	Dilution
LD09018	F39TW08 (40-45)	SW8260	Methylene Chloride	0.66	ug/l	UB	Blank Contamination	2
LD09018	F39TW08 (40-45)	SW8270	Hexachloro-1,3-Butadiene	<10.0	ug/l	R	Surrogate Recovery	1
LD09018	F39TW08 (40-45)	SW8270	N-Nitroso di-n-propylamine	<10.0	ug/l	R	Surrogate Recovery	1
LD09018	F39TW08 (40-45)	SW8270	Hexachloroethane	<10.0	ug/l	R	Surrogate Recovery	1
LD09018	F39TW08 (40-45)	SW8270	4-Chlorophenyl Phenyl Ether	<10.0	ug/l	R	Surrogate Recovery	1
LD09018	F39TW08 (40-45)	SW8270	Hexachlorocyclopentadiene	<50.0	ug/l	R	Surrogate Recovery	1
LD09018	F39TW08 (40-45)	SW8270	3,5,5-Trimethyl-2-cyclohexene-1-one	<10.0	ug/l	R	Surrogate Recovery	1
LD09018	F39TW08 (40-45)	SW8270	Acenaphthene	<10.0	ug/l	R	Surrogate Recovery	1
LD09018	F39TW08 (40-45)	SW8270	Diethyl phthalate	<50.0	ug/l	R	Surrogate Recovery	1
LD09018	F39TW08 (40-45)	SW8270	Di-n-butyl phthalate	<50.0	ug/l	R	Surrogate Recovery	1
LD09018	F39TW08 (40-45)	SW8270	Phenanthrene	<10.0	ug/l	R	Surrogate Recovery	1
LD09018	F39TW08 (40-45)	SW8270	Benzyl Butyl Phthalate	<50.0	ug/l	R	Surrogate Recovery	1
LD09018	F39TW08 (40-45)	SW8270	N-Nitrosodiphenylamine	<10.0	ug/l	R	Surrogate Recovery	1
LD09018	F39TW08 (40-45)	SW8270	Carbazole	<10.0	ug/l	R	Surrogate Recovery	1
LD09018	F39TW08 (40-45)	SW8270	2-Nitroaniline	<20.0	ug/l	R	Surrogate Recovery	1

SDG	Sample ID	Method	Analyte	Result	Units	Qualifier	Reason	Dilution
LD09018	F39TW08 (40-45)	SW8270	Naphthalene	<10.0	ug/l	R	Surrogate Recovery	1
LD09018	F39TW08 (40-45)	SW8270	2-Methyl naphthalene	<10.0	ug/l	R	Surrogate Recovery	1
LD09018	F39TW08 (40-45)	SW8270	2-Chloronaphthalene	<10.0	ug/l	R	Surrogate Recovery	1
LD09018	F39TW08 (40-45)	SW8270	3,3'-Dichlorobenzidine	<50.0	ug/l	R	Surrogate Recovery	1
LD09018	F39TW08 (40-45)	SW8270	1,1'-Biphenyl	<10.0	ug/l	R	Surrogate Recovery	1
LD09018	F39TW08 (40-45)	SW8270	Acetophenone	<10.0	ug/l	R	Surrogate Recovery	1
LD09018	F39TW08 (40-45)	SW8270	Nitrobenzene	<10.0	ug/l	R	Surrogate Recovery	1
LD09018	F39TW08 (40-45)	SW8270	3-Nitroaniline	<20.0	ug/l	R	Surrogate Recovery	1
LD09018	F39TW08 (40-45)	SW8270	2,6-Dinitroluene	<20.0	ug/l	R	Surrogate Recovery	1
LD09018	F39TW08 (40-45)	SW8270	Pyrene	<10.0	ug/l	R	Surrogate Recovery	1
LD09018	F39TW08 (40-45)	SW8270	Fluorene	<10.0	ug/l	R	Surrogate Recovery	1
LD09018	F39TW08 (40-45)	SW8270	Anthracene	<10.0	ug/l	R	Surrogate Recovery	1
LD09018	F39TW08 (40-45)	SW8270	Dibenzofuran	<10.0	ug/l	R	Surrogate Recovery	1
LD09018	F39TW08 (40-45)	SW8270	4-Bromophenyl Phenyl Ether	<10.0	ug/l	R	Surrogate Recovery	1
LD09018	F39TW08 (40-45)	SW8270	Caprolactam	<50.0	ug/l	R	Surrogate Recovery	1

SDG	Sample ID	Method	Analyte	Result	Units	Qualifier	Reason	Dilution
LD09018	F39TW08 (40-45)	SW8270	p-Chloroaniline	<10.0	ug/l	R	Surrogate Recovery	1
LD09018	F39TW08 (40-45)	SW8270	bis(2-chloroisopropyl) ether	<10.0	ug/l	R	Surrogate Recovery	1
LD09018	F39TW08 (40-45)	SW8270	bis(2-Chloroethoxy) ether	<10.0	ug/l	R	Surrogate Recovery	1
LD09018	F39TW08 (40-45)	SW8270	bis(2-Chloroethoxy)methane	<10.0	ug/l	R	Surrogate Recovery	1
LD09018	F39TW08 (40-45)	SW8270	bis(2-Ethylhexyl)phthalate	<50.0	ug/l	R	Surrogate Recovery	1
LD09018	F39TW08 (40-45)	SW8270	Benzo(a)anthracene	<10.0	ug/l	R	Surrogate Recovery	1
LD09018	F39TW08 (40-45)	SW8270	Hexachlorobenzene	<10.0	ug/l	R	Surrogate Recovery	1
LD09018	F39TW08 (40-45)	SW8270	2,4-Dinitrotoluene	<20.0	ug/l	R	Surrogate Recovery	1
LD09018	F39TW08 (40-45)	SW8270	Benzaldehyde	<50.0	ug/l	R	Surrogate Recovery	1
LD09018	F39TW08 (40-45)	SW8270	Benzo(k)fluoranthene	<10.0	ug/l	R	Surrogate Recovery	1
LD09018	F39TW08 (40-45)	SW8270	Dibenzo(a,h)anthracene	<10.0	ug/l	R	Surrogate Recovery	1
LD09018	F39TW08 (40-45)	SW8270	Benzo(a)pyrene	<10.0	ug/l	R	Surrogate Recovery	1
LD09018	F39TW08 (40-45)	SW8270	Di-n-octyl phthalate	<50.0	ug/l	R	Surrogate Recovery	1
LD09018	F39TW08 (40-45)	SW8270	Acenaphthylene	<10.0	ug/l	R	Surrogate Recovery	1
LD09018	F39TW08 (40-45)	SW8270	Dimethyl Phthalate	<50.0	ug/l	R	Surrogate Recovery	1

SDG	Sample ID	Method	Analyte	Result	Units	Qualifier	Reason	Dilution
LD09018	F39TW08 (40-45)	SW8270	Fluoranthene	<10.0	ug/l	R	Surrogate Recovery	1
LD09018	F39TW08 (40-45)	SW8270	Benzo(b)fluoranthene	<10.0	ug/l	R	Surrogate Recovery	1
LD09018	F39TW08 (40-45)	SW8270	Indeno(1,2,3-cd)pyrene	<10.0	ug/l	R	Surrogate Recovery	1
LD09018	F39TW08 (40-45)	SW8270	Benzo(g,h,i)perylene	<10.0	ug/l	R	Surrogate Recovery	1
LD09018	F39TW08 (40-45)	SW8270	Atrazine	<10.0	ug/l	R	Surrogate Recovery	1
LD09018	F39TW08 (40-45)	SW8270	p-Nitroaniline	<20.0	ug/l	R	Surrogate Recovery	1
LD09018	F39TW08 (40-45)	SW8270	1,2-Benz-phenanthracene	<10.0	ug/l	R	Surrogate Recovery	1
LD09018	TRIP BLANK (040910)	SW8260	Bromomethane	<0.50	ug/l	UJ	LCS/LCSD RPD	1
LD14020	F39TW09 (10-15)	SW8260	Methylene Chloride	0.18	ug/l	UB	Blank Contamination	1
LD14020	F39TW09 (20-25)	SW8260	Methylene Chloride	0.21	ug/l	UB	Blank Contamination	1
LD14020	F39TW09 (30-35)	SW8260	trans-1,3-Dichloropropene	<0.50	ug/l	UJ	MS Recovery	1
LD14020	F39TW09 (30-35)	SW8260	Tribromomethane	<0.50	ug/l	UJ	MS/MSD Recovery	1
LD14020	F39TW09 (30-35)	SW8260	Carbon disulfide	0.37	ug/l	J	MS/MSD RPD	1
LD14020	F39TW09 (30-35)	SW8260	Acetone	7.5	ug/l	J	MS Recovery and MS/MSD RPD	1
LD14020	F39TW09 (30-35)	SW8260	Styrene	<0.50	ug/l	UJ	MS/MSD Recovery	1

SDG	Sample ID	Method	Analyte	Result	Units	Qualifier	Reason	Dilution
LD14020	F39TW09 (30-35)	SW8260	Methylene Chloride	<0.50	ug/l	UJ	MS/MSD RPD	1
LD14020	F39TW09 (30-35)	SW8260	Bromomethane	<0.50	ug/l	UJ	MS/MSD RPD	1
LD14020	F39TW09 (30-35)	SW8270	Carbazole	<1.0	ug/l	R	Surrogate Recovery	1
LD14020	F39TW09 (30-35)	SW8270	2,6-Dinitroluene	<2.0	ug/l	R	Surrogate Recovery	1
LD14020	F39TW09 (30-35)	SW8270	Hexachloroethane	<1.0	ug/l	R	Surrogate Recovery	1
LD14020	F39TW09 (30-35)	SW8270	4-Chlorophenyl Phenyl Ether	<1.0	ug/l	R	Surrogate Recovery	1
LD14020	F39TW09 (30-35)	SW8270	Hexachlorocyclopentadiene	<5.1	ug/l	R	Surrogate Recovery	1
LD14020	F39TW09 (30-35)	SW8270	3,5,5-Trimethyl-2-cyclohexene-1-one	<1.0	ug/l	R	Surrogate Recovery	1
LD14020	F39TW09 (30-35)	SW8270	Acenaphthene	<1.0	ug/l	R	Surrogate Recovery	1
LD14020	F39TW09 (30-35)	SW8270	Diethyl phthalate	<5.1	ug/l	R	Surrogate Recovery	1
LD14020	F39TW09 (30-35)	SW8270	Di-n-butyl phthalate	<5.1	ug/l	R	Surrogate Recovery	1
LD14020	F39TW09 (30-35)	SW8270	Phenanthrene	<1.0	ug/l	R	Surrogate Recovery	1
LD14020	F39TW09 (30-35)	SW8270	Benzyl Butyl Phthalate	<5.1	ug/l	R	Surrogate Recovery	1
LD14020	F39TW09 (30-35)	SW8270	Fluorene	<1.0	ug/l	R	Surrogate Recovery	1
LD14020	F39TW09 (30-35)	SW8270	Hexachloro-1,3-Butadiene	<1.0	ug/l	R	Surrogate Recovery	1

SDG	Sample ID	Method	Analyte	Result	Units	Qualifier	Reason	Dilution
LD14020	F39TW09 (30-35)	SW8270	2-Nitroaniline	<2.0	ug/l	R	Surrogate Recovery	1
LD14020	F39TW09 (30-35)	SW8270	Naphthalene	<1.0	ug/l	R	Surrogate Recovery	1
LD14020	F39TW09 (30-35)	SW8270	2-Methyl naphthalene	<1.0	ug/l	R	Surrogate Recovery	1
LD14020	F39TW09 (30-35)	SW8270	2-Chloronaphthalene	<1.0	ug/l	R	Surrogate Recovery	1
LD14020	F39TW09 (30-35)	SW8270	3,3'-Dichlorobenzidine	<5.1	ug/l	R	Surrogate Recovery	1
LD14020	F39TW09 (30-35)	SW8270	1,1'-Biphenyl	<1.0	ug/l	R	Surrogate Recovery	1
LD14020	F39TW09 (30-35)	SW8270	Acetophenone	<1.0	ug/l	R	Surrogate Recovery	1
LD14020	F39TW09 (30-35)	SW8270	Nitrobenzene	<1.0	ug/l	R	Surrogate Recovery	1
LD14020	F39TW09 (30-35)	SW8270	3-Nitroaniline	<2.0	ug/l	R	Surrogate Recovery	1
LD14020	F39TW09 (30-35)	SW8270	Benzo(a)anthracene	<1.0	ug/l	R	Surrogate Recovery	1
LD14020	F39TW09 (30-35)	SW8270	N-Nitrosodiphenylamine	<1.0	ug/l	R	Surrogate Recovery	1
LD14020	F39TW09 (30-35)	SW8270	4-Bromophenyl Phenyl Ether	<1.0	ug/l	R	Surrogate Recovery	1
LD14020	F39TW09 (30-35)	SW8270	N-Nitroso di-n-propylamine	<1.0	ug/l	R	Surrogate Recovery	1
LD14020	F39TW09 (30-35)	SW8270	Dibenzo(a,h)anthracene	<1.0	ug/l	R	Surrogate Recovery	1
LD14020	F39TW09 (30-35)	SW8270	Benzaldehyde	<5.1	ug/l	R	Surrogate Recovery	1

SDG	Sample ID	Method	Analyte	Result	Units	Qualifier	Reason	Dilution
LD14020	F39TW09 (30-35)	SW8270	Caprolactam	<5.1	ug/l	R	Surrogate Recovery	1
LD14020	F39TW09 (30-35)	SW8270	p-Chloroaniline	<1.0	ug/l	R	Surrogate Recovery	1
LD14020	F39TW09 (30-35)	SW8270	bis(2-chloroisopropyl) ether	<1.0	ug/l	R	Surrogate Recovery	1
LD14020	F39TW09 (30-35)	SW8270	bis(2-Chloroethoxy) ether	<1.0	ug/l	R	Surrogate Recovery	1
LD14020	F39TW09 (30-35)	SW8270	bis(2-Chloroethoxy)methane	<1.0	ug/l	R	Surrogate Recovery	1
LD14020	F39TW09 (30-35)	SW8270	bis(2-Ethylhexyl)phthalate	<5.1	ug/l	R	Surrogate Recovery	1
LD14020	F39TW09 (30-35)	SW8270	Di-n-octyl phthalate	<5.1	ug/l	R	Surrogate Recovery	1
LD14020	F39TW09 (30-35)	SW8270	Hexachlorobenzene	<1.0	ug/l	R	Surrogate Recovery	1
LD14020	F39TW09 (30-35)	SW8270	Anthracene	<1.0	ug/l	R	Surrogate Recovery	1
LD14020	F39TW09 (30-35)	SW8270	Benzo(b)fluoranthene	<1.0	ug/l	R	Surrogate Recovery	1
LD14020	F39TW09 (30-35)	SW8270	p-Nitroaniline	<2.0	ug/l	R	Surrogate Recovery	1
LD14020	F39TW09 (30-35)	SW8270	Acenaphthylene	<1.0	ug/l	R	Surrogate Recovery	1
LD14020	F39TW09 (30-35)	SW8270	Benzo(a)pyrene	<1.0	ug/l	R	Surrogate Recovery	1
LD14020	F39TW09 (30-35)	SW8270	2,4-Dinitrotoluene	<2.0	ug/l	R	Surrogate Recovery	1
LD14020	F39TW09 (30-35)	SW8270	Fluoranthene	<1.0	ug/l	R	Surrogate Recovery	1

SDG	Sample ID	Method	Analyte	Result	Units	Qualifier	Reason	Dilution
LD14020	F39TW09 (30-35)	SW8270	1,2-Benz-phenanthracene	<1.0	ug/l	R	Surrogate Recovery	1
LD14020	F39TW09 (30-35)	SW8270	Indeno(1,2,3-cd)pyrene	<1.0	ug/l	R	Surrogate Recovery	1
LD14020	F39TW09 (30-35)	SW8270	Benzo(g,h,i)perylene	<1.0	ug/l	R	Surrogate Recovery	1
LD14020	F39TW09 (30-35)	SW8270	Atrazine	<1.0	ug/l	R	Surrogate Recovery	1
LD14020	F39TW09 (30-35)	SW8270	Dibenzofuran	<1.0	ug/l	R	Surrogate Recovery	1
LD14020	F39TW09 (30-35)	SW8270	Dimethyl Phthalate	<5.1	ug/l	R	Surrogate Recovery	1
LD14020	F39TW09 (30-35)	SW8270	Pyrene	<1.0	ug/l	R	Surrogate Recovery	1
LD14020	F39TW09 (30-35)	SW8270	Benzo(k)fluoranthene	<1.0	ug/l	R	Surrogate Recovery	1
LD14020	F39TW09 (40-45)	SW8260	Methylene Chloride	0.24	ug/l	UB	Blank Contamination	1
LD14020	F39TW10 (10-15)	SW8260	Methylene Chloride	0.2	ug/l	UB	Blank Contamination	1
LD14020	F39TW10 (20-25)	SW8260	Methylene Chloride	0.23	ug/l	UB	Blank Contamination	1
LD14020	F39TW10 (30-35)	SW8260	Methylene Chloride	0.2	ug/l	UB	Blank Contamination	1
LD14020	F39TW10 (40-45)	SW8260	Methylene Chloride	0.23	ug/l	UB	Blank Contamination	1
LD14020	F39TW10 (40-45)	SW8270	3,5,5-Trimethyl-2-cyclohexene-1-one	<1.0	ug/l	UJ	Holding Time	1
LD14020	F39TW10 (40-45)	SW8270	Carbazole	<1.0	ug/l	UJ	Holding Time	1

SDG	Sample ID	Method	Analyte	Result	Units	Qualifier	Reason	Dilution
LD14020	F39TW10 (40-45)	SW8270	Fluorene	<1.0	ug/l	UJ	Holding Time	1
LD14020	F39TW10 (40-45)	SW8270	N-Nitrosodiphenylamine	<1.0	ug/l	UJ	Holding Time	1
LD14020	F39TW10 (40-45)	SW8270	Benzyl Butyl Phthalate	<5.1	ug/l	UJ	Holding Time	1
LD14020	F39TW10 (40-45)	SW8270	Phenanthrene	<1.0	ug/l	UJ	Holding Time	1
LD14020	F39TW10 (40-45)	SW8270	Di-n-butyl phthalate	<5.1	ug/l	UJ	Holding Time	1
LD14020	F39TW10 (40-45)	SW8270	Acenaphthene	<1.0	ug/l	UJ	Holding Time	1
LD14020	F39TW10 (40-45)	SW8270	Hexachlorocyclopentadiene	<5.1	ug/l	UJ	Holding Time	1
LD14020	F39TW10 (40-45)	SW8270	4-Chlorophenyl Phenyl Ether	<1.0	ug/l	UJ	Holding Time	1
LD14020	F39TW10 (40-45)	SW8270	Hexachloroethane	<1.0	ug/l	UJ	Holding Time	1
LD14020	F39TW10 (40-45)	SW8270	N-Nitroso di-n-propylamine	<1.0	ug/l	UJ	Holding Time	1
LD14020	F39TW10 (40-45)	SW8270	3-Nitroaniline	<2.0	ug/l	UJ	Holding Time	1
LD14020	F39TW10 (40-45)	SW8270	2,6-Dinitroluene	<2.0	ug/l	UJ	Holding Time	1
LD14020	F39TW10 (40-45)	SW8270	Hexachloro-1,3-Butadiene	<1.0	ug/l	UJ	Holding Time	1
LD14020	F39TW10 (40-45)	SW8270	Diethyl phthalate	<5.1	ug/l	UJ	Holding Time	1
LD14020	F39TW10 (40-45)	SW8270	3,3'-Dichlorobenzidine	<5.1	ug/l	UJ	Holding Time	1

SDG	Sample ID	Method	Analyte	Result	Units	Qualifier	Reason	Dilution
LD14020	F39TW10 (40-45)	SW8270	Nitrobenzene	<1.0	ug/l	UJ	Holding Time	1
LD14020	F39TW10 (40-45)	SW8270	2,4,5-Trichlorophenol	<1.0	ug/l	UJ	Holding Time	1
LD14020	F39TW10 (40-45)	SW8270	2-Chlorophenol	<1.0	ug/l	UJ	Holding Time	1
LD14020	F39TW10 (40-45)	SW8270	2-Methylphenol	<1.0	ug/l	UJ	Holding Time	1
LD14020	F39TW10 (40-45)	SW8270	m & p Cresol	<2.0	ug/l	UJ	Holding Time	1
LD14020	F39TW10 (40-45)	SW8270	Acetophenone	<1.0	ug/l	UJ	Holding Time	1
LD14020	F39TW10 (40-45)	SW8270	4-chloro-3-methylphenol	<1.0	ug/l	UJ	Holding Time	1
LD14020	F39TW10 (40-45)	SW8270	Pentachlorophenol	<5.1	ug/l	UJ	Holding Time	1
LD14020	F39TW10 (40-45)	SW8270	2-Chloronaphthalene	<1.0	ug/l	UJ	Holding Time	1
LD14020	F39TW10 (40-45)	SW8270	2-Methyl naphthalene	<1.0	ug/l	UJ	Holding Time	1
LD14020	F39TW10 (40-45)	SW8270	Naphthalene	<1.0	ug/l	UJ	Holding Time	1
LD14020	F39TW10 (40-45)	SW8270	2-Nitrophenol	<2.0	ug/l	UJ	Holding Time	1
LD14020	F39TW10 (40-45)	SW8270	2-Nitroaniline	<2.0	ug/l	UJ	Holding Time	1
LD14020	F39TW10 (40-45)	SW8270	2,4,6-Trichlorophenol	<1.0	ug/l	UJ	Holding Time	1
LD14020	F39TW10 (40-45)	SW8270	1,1'-Biphenyl	<1.0	ug/l	UJ	Holding Time	1

SDG	Sample ID	Method	Analyte	Result	Units	Qualifier	Reason	Dilution
LD14020	F39TW10 (40-45)	SW8270	p-Chloroaniline	<1.0	ug/l	UJ	Holding Time	1
LD14020	F39TW10 (40-45)	SW8270	Anthracene	<1.0	ug/l	UJ	Holding Time	1
LD14020	F39TW10 (40-45)	SW8270	Hexachlorobenzene	<1.0	ug/l	UJ	Holding Time	1
LD14020	F39TW10 (40-45)	SW8270	Di-n-octyl phthalate	<5.1	ug/l	UJ	Holding Time	1
LD14020	F39TW10 (40-45)	SW8270	bis(2-Ethylhexyl)phthalate	<5.1	ug/l	UJ	Holding Time	1
LD14020	F39TW10 (40-45)	SW8270	bis(2-Chloroethoxy)methane	<1.0	ug/l	UJ	Holding Time	1
LD14020	F39TW10 (40-45)	SW8270	2,4-Dichlorophenol	<1.0	ug/l	UJ	Holding Time	1
LD14020	F39TW10 (40-45)	SW8270	Phenol	<1.0	ug/l	UJ	Holding Time	1
LD14020	F39TW10 (40-45)	SW8270	Caprolactam	<5.1	ug/l	UJ	Holding Time	1
LD14020	F39TW10 (40-45)	SW8270	2,4-Dimethylphenol	<1.0	ug/l	UJ	Holding Time	1
LD14020	F39TW10 (40-45)	SW8270	4-Bromophenyl Phenyl Ether	<1.0	ug/l	UJ	Holding Time	1
LD14020	F39TW10 (40-45)	SW8270	4-Nitrophenol	<5.1	ug/l	UJ	Holding Time	1
LD14020	F39TW10 (40-45)	SW8270	p-Nitroaniline	<2.0	ug/l	UJ	Holding Time	1
LD14020	F39TW10 (40-45)	SW8270	bis(2-chloroisopropyl) ether	<1.0	ug/l	UJ	Holding Time	1
LD14020	F39TW10 (40-45)	SW8270	Benzo(a)anthracene	<1.0	ug/l	UJ	Holding Time	1

SDG	Sample ID	Method	Analyte	Result	Units	Qualifier	Reason	Dilution
LD14020	F39TW10 (40-45)	SW8270	bis(2-Chloroethoxy) ether	<1.0	ug/l	UJ	Holding Time	1
LD14020	F39TW10 (40-45)	SW8270	Benzo(k)fluoranthene	<1.0	ug/l	UJ	Holding Time	1
LD14020	F39TW10 (40-45)	SW8270	2,4-Dinitrophenol	<5.1	ug/l	UJ	Holding Time	1
LD14020	F39TW10 (40-45)	SW8270	Benzo(a)pyrene	<1.0	ug/l	UJ	Holding Time	1
LD14020	F39TW10 (40-45)	SW8270	Benzaldehyde	<5.1	ug/l	UJ	Holding Time	1
LD14020	F39TW10 (40-45)	SW8270	1,2-Benz-phenanthracene	<1.0	ug/l	UJ	Holding Time	1
LD14020	F39TW10 (40-45)	SW8270	2,4-Dinitrotoluene	<2.0	ug/l	UJ	Holding Time	1
LD14020	F39TW10 (40-45)	SW8270	Acenaphthylene	<1.0	ug/l	UJ	Holding Time	1
LD14020	F39TW10 (40-45)	SW8270	4,6-Dinitro-2-methylphenol	<5.1	ug/l	UJ	Holding Time	1
LD14020	F39TW10 (40-45)	SW8270	Fluoranthene	<1.0	ug/l	UJ	Holding Time	1
LD14020	F39TW10 (40-45)	SW8270	Benzo(b)fluoranthene	<1.0	ug/l	UJ	Holding Time	1
LD14020	F39TW10 (40-45)	SW8270	Indeno(1,2,3-cd)pyrene	<1.0	ug/l	UJ	Holding Time	1
LD14020	F39TW10 (40-45)	SW8270	Benzo(g,h,i)perylene	<1.0	ug/l	UJ	Holding Time	1
LD14020	F39TW10 (40-45)	SW8270	Atrazine	<1.0	ug/l	UJ	Holding Time	1
LD14020	F39TW10 (40-45)	SW8270	Dibenzofuran	<1.0	ug/l	UJ	Holding Time	1

SDG	Sample ID	Method	Analyte	Result	Units	Qualifier	Reason	Dilution
LD14020	F39TW10 (40-45)	SW8270	Dimethyl Phthalate	<5.1	ug/l	UJ	Holding Time	1
LD14020	F39TW10 (40-45)	SW8270	Pyrene	<1.0	ug/l	UJ	Holding Time	1
LD14020	F39TW10 (40-45)	SW8270	Dibenzo(a,h)anthracene	<1.0	ug/l	UJ	Holding Time	1
LD14020	F39TW11 (10-15)	SW8260	Acetone	6.7	ug/l	UB	Blank Contamination	1
LD14020	F39TW11 (10-15)	SW8260	Methylene Chloride	0.22	ug/l	UB	Blank Contamination	1
LD14020	F39TW11 (10-15)	SW8260	Carbon disulfide	0.34	ug/l	UB	Blank Contamination	1
LD14020	F39TW11 (20-25)	SW8260	Carbon disulfide	1.5	ug/l	UB	Blank Contamination	1
LD14020	F39TW11 (20-25)	SW8260	Methylene Chloride	0.2	ug/l	UB	Blank Contamination	1
LD14020	F39TW11 (20-25)	SW8270	2-Nitroaniline	<2.0	ug/l	UJ	MS/MSD Recovery	1
LD14020	F39TW11 (20-25)	SW8270	3,5,5-Trimethyl-2-cyclohexene-1-one	<1.0	ug/l	UJ	MS/MSD Recovery	1
LD14020	F39TW11 (20-25)	SW8270	Diethyl phthalate	<5.1	ug/l	UJ	MS/MSD Recovery	1
LD14020	F39TW11 (20-25)	SW8270	Di-n-butyl phthalate	<5.1	ug/l	UJ	MS/MSD Recovery	1
LD14020	F39TW11 (20-25)	SW8270	Phenanthrene	<1.0	ug/l	UJ	MS/MSD Recovery	1
LD14020	F39TW11 (20-25)	SW8270	Benzyl Butyl Phthalate	<5.1	ug/l	UJ	MS/MSD Recovery	1
LD14020	F39TW11 (20-25)	SW8270	N-Nitrosodiphenylamine	<1.0	ug/l	R	MS/MSD Recovery	1

SDG	Sample ID	Method	Analyte	Result	Units	Qualifier	Reason	Dilution
LD14020	F39TW11 (20-25)	SW8270	Fluorene	<1.0	ug/l	UJ	MS/MSD Recovery	1
LD14020	F39TW11 (20-25)	SW8270	Hexachloro-1,3-Butadiene	<1.0	ug/l	UJ	MS Recovery	1
LD14020	F39TW11 (20-25)	SW8270	Naphthalene	<1.0	ug/l	UJ	MS/MSD Recovery	1
LD14020	F39TW11 (20-25)	SW8270	2-Methyl naphthalene	<1.0	ug/l	UJ	MS/MSD Recovery	1
LD14020	F39TW11 (20-25)	SW8270	2-Chloronaphthalene	<1.0	ug/l	UJ	MSD Recovery and MS/MSD RPD	1
LD14020	F39TW11 (20-25)	SW8270	2,4,5-Trichlorophenol	<1.0	ug/l	UJ	MS/MSD Recovery	1
LD14020	F39TW11 (20-25)	SW8270	Nitrobenzene	<1.0	ug/l	UJ	MS/MSD Recovery	1
LD14020	F39TW11 (20-25)	SW8270	3-Nitroaniline	<2.0	ug/l	R	MS/MSD Recovery	1
LD14020	F39TW11 (20-25)	SW8270	2,6-Dinitroluene	<2.0	ug/l	UJ	MS/MSD Recovery	1
LD14020	F39TW11 (20-25)	SW8270	Hexachloroethane	<1.0	ug/l	UJ	MS/MSD Recovery	1
LD14020	F39TW11 (20-25)	SW8270	Carbazole	<1.0	ug/l	UJ	MS/MSD Recovery	1
LD14020	F39TW11 (20-25)	SW8270	Dibenzofuran	<1.0	ug/l	UJ	MS/MSD Recovery	1
LD14020	F39TW11 (20-25)	SW8270	4-Bromophenyl Phenyl Ether	<1.0	ug/l	UJ	MS/MSD Recovery	1
LD14020	F39TW11 (20-25)	SW8270	p-Chloroaniline	<1.0	ug/l	R	MS/MSD Recovery	1
LD14020	F39TW11 (20-25)	SW8270	bis(2-Chloroethoxy)methane	<1.0	ug/l	UJ	MS/MSD Recovery	1

SDG	Sample ID	Method	Analyte	Result	Units	Qualifier	Reason	Dilution
LD14020	F39TW11 (20-25)	SW8270	bis(2-Ethylhexyl)phthalate	<5.1	ug/l	R	MS Recovery	1
LD14020	F39TW11 (20-25)	SW8270	Di-n-octyl phthalate	<5.1	ug/l	UJ	MS/MSD Recovery	1
LD14020	F39TW11 (20-25)	SW8270	Hexachlorobenzene	<1.0	ug/l	UJ	MS/MSD Recovery	1
LD14020	F39TW11 (20-25)	SW8270	Anthracene	<1.0	ug/l	UJ	MS/MSD Recovery	1
LD14020	F39TW11 (20-25)	SW8270	2,4-Dinitrotoluene	<2.0	ug/l	UJ	MS/MSD Recovery	1
LD14020	F39TW11 (20-25)	SW8270	p-Nitroaniline	<2.0	ug/l	R	MS/MSD Recovery	1
LD14020	F39TW11 (20-25)	SW8270	Dimethyl Phthalate	<5.1	ug/l	UJ	MS/MSD Recovery	1
LD14020	F39TW11 (20-25)	SW8270	Benzo(g,h,i)perylene	<1.0	ug/l	UJ	MS/MSD Recovery	1
LD14020	F39TW11 (20-25)	SW8270	Indeno(1,2,3-cd)pyrene	<1.0	ug/l	UJ	MS/MSD Recovery	1
LD14020	F39TW11 (20-25)	SW8270	Fluoranthene	<1.0	ug/l	UJ	MS/MSD Recovery	1
LD14020	F39TW11 (20-25)	SW8270	1,2-Benz-phenanthracene	<1.0	ug/l	UJ	MS/MSD Recovery	1
LD14020	F39TW11 (20-25)	SW8270	Dibenzo(a,h)anthracene	<1.0	ug/l	UJ	MS/MSD Recovery	1
LD14020	F39TW11 (20-25)	SW8270	Benzo(a)anthracene	<1.0	ug/l	UJ	MS/MSD Recovery	1
LD14020	F39TW11 (20-25)	SW8270	4-Chlorophenyl Phenyl Ether	<1.0	ug/l	UJ	MS Recovery	1
LD14020	F39TW11 (20-25)	SW8270	4-chloro-3-methylphenol	<1.0	ug/l	UJ	MS/MSD Recovery	1

SDG	Sample ID	Method	Analyte	Result	Units	Qualifier	Reason	Dilution
LD14020	F39TW11 (20-25)	SW8270	Pyrene	<1.0	ug/l	UJ	MS/MSD Recovery	1
LD14020	F39TW11 (30-35)	SW8260	Acetone	2.9	ug/l	UB	Blank Contamination	1
LD14020	F39TW11 (30-35)	SW8260	Methylene Chloride	0.19	ug/l	UB	Blank Contamination	1
LD14020	F39TW11 (30-35)	SW8260	Carbon disulfide	0.46	ug/l	UB	Blank Contamination	1
LD14020	F39TW11 (40-45)	SW8260	Vinyl Chloride	0.6	ug/l	UB	Blank Contamination	1
LD14020	F39TW11 (40-45)	SW8260	Methylene Chloride	0.2	ug/l	UB	Blank Contamination	1
LD14020	F39TW11 (40-45)	SW8260	Carbon disulfide	0.4	ug/l	UB	Blank Contamination	1
LD14020	F39TW11 (40-45)	SW8270	2,6-Dinitroluene	<2.0	ug/l	UJ	Holding Time	1
LD14020	F39TW11 (40-45)	SW8270	Fluorene	<1.0	ug/l	UJ	Holding Time	1
LD14020	F39TW11 (40-45)	SW8270	N-Nitrosodiphenylamine	<1.0	ug/l	UJ	Holding Time	1
LD14020	F39TW11 (40-45)	SW8270	Benzyl Butyl Phthalate	<5.1	ug/l	UJ	Holding Time	1
LD14020	F39TW11 (40-45)	SW8270	Phenanthrene	<1.0	ug/l	UJ	Holding Time	1
LD14020	F39TW11 (40-45)	SW8270	Di-n-butyl phthalate	<5.1	ug/l	UJ	Holding Time	1
LD14020	F39TW11 (40-45)	SW8270	Diethyl phthalate	<5.1	ug/l	UJ	Holding Time	1
LD14020	F39TW11 (40-45)	SW8270	Acenaphthene	<1.0	ug/l	UJ	Holding Time	1

SDG	Sample ID	Method	Analyte	Result	Units	Qualifier	Reason	Dilution
LD14020	F39TW11 (40-45)	SW8270	Hexachlorocyclopentadiene	<5.1	ug/l	UJ	Holding Time	1
LD14020	F39TW11 (40-45)	SW8270	Carbazole	<1.0	ug/l	UJ	Holding Time	1
LD14020	F39TW11 (40-45)	SW8270	4-Chlorophenyl Phenyl Ether	<1.0	ug/l	UJ	Holding Time	1
LD14020	F39TW11 (40-45)	SW8270	Hexachloroethane	<1.0	ug/l	UJ	Holding Time	1
LD14020	F39TW11 (40-45)	SW8270	2,4,5-Trichlorophenol	<1.0	ug/l	UJ	Holding Time	1
LD14020	F39TW11 (40-45)	SW8270	N-Nitroso di-n-propylamine	<1.0	ug/l	UJ	Holding Time	1
LD14020	F39TW11 (40-45)	SW8270	3,5,5-Trimethyl-2-cyclohexene-1-one	<1.0	ug/l	UJ	Holding Time	1
LD14020	F39TW11 (40-45)	SW8270	2-Chloronaphthalene	<1.0	ug/l	UJ	Holding Time	1
LD14020	F39TW11 (40-45)	SW8270	4-chloro-3-methylphenol	<1.0	ug/l	UJ	Holding Time	1
LD14020	F39TW11 (40-45)	SW8270	3-Nitroaniline	<2.0	ug/l	UJ	Holding Time	1
LD14020	F39TW11 (40-45)	SW8270	Nitrobenzene	<1.0	ug/l	UJ	Holding Time	1
LD14020	F39TW11 (40-45)	SW8270	Acetophenone	<1.0	ug/l	UJ	Holding Time	1
LD14020	F39TW11 (40-45)	SW8270	1,2-Benz-phenanthracene	<1.0	ug/l	UJ	Holding Time	1
LD14020	F39TW11 (40-45)	SW8270	2-Chlorophenol	<1.0	ug/l	UJ	Holding Time	1
LD14020	F39TW11 (40-45)	SW8270	2-Methylphenol	<1.0	ug/l	UJ	Holding Time	1

SDG	Sample ID	Method	Analyte	Result	Units	Qualifier	Reason	Dilution
LD14020	F39TW11 (40-45)	SW8270	3,3'-Dichlorobenzidine	<5.1	ug/l	UJ	Holding Time	1
LD14020	F39TW11 (40-45)	SW8270	Hexachloro-1,3-Butadiene	<1.0	ug/l	UJ	Holding Time	1
LD14020	F39TW11 (40-45)	SW8270	2-Methyl naphthalene	<1.0	ug/l	UJ	Holding Time	1
LD14020	F39TW11 (40-45)	SW8270	Naphthalene	<1.0	ug/l	UJ	Holding Time	1
LD14020	F39TW11 (40-45)	SW8270	2-Nitrophenol	<2.0	ug/l	UJ	Holding Time	1
LD14020	F39TW11 (40-45)	SW8270	2-Nitroaniline	<2.0	ug/l	UJ	Holding Time	1
LD14020	F39TW11 (40-45)	SW8270	2,4,6-Trichlorophenol	<1.0	ug/l	UJ	Holding Time	1
LD14020	F39TW11 (40-45)	SW8270	Pentachlorophenol	<5.1	ug/l	UJ	Holding Time	1
LD14020	F39TW11 (40-45)	SW8270	1,1'-Biphenyl	<1.0	ug/l	UJ	Holding Time	1
LD14020	F39TW11 (40-45)	SW8270	2,4-Dimethylphenol	<1.0	ug/l	UJ	Holding Time	1
LD14020	F39TW11 (40-45)	SW8270	Benzo(a)anthracene	<1.0	ug/l	UJ	Holding Time	1
LD14020	F39TW11 (40-45)	SW8270	bis(2-Chloroethoxy)methane	<1.0	ug/l	UJ	Holding Time	1
LD14020	F39TW11 (40-45)	SW8270	bis(2-Chloroethoxy) ether	<1.0	ug/l	UJ	Holding Time	1
LD14020	F39TW11 (40-45)	SW8270	Phenol	<1.0	ug/l	UJ	Holding Time	1
LD14020	F39TW11 (40-45)	SW8270	bis(2-chloroisopropyl) ether	<1.0	ug/l	UJ	Holding Time	1

SDG	Sample ID	Method	Analyte	Result	Units	Qualifier	Reason	Dilution
LD14020	F39TW11 (40-45)	SW8270	Di-n-octyl phthalate	<5.1	ug/l	UJ	Holding Time	1
LD14020	F39TW11 (40-45)	SW8270	m & p Cresol	<2.0	ug/l	UJ	Holding Time	1
LD14020	F39TW11 (40-45)	SW8270	Hexachlorobenzene	<1.0	ug/l	UJ	Holding Time	1
LD14020	F39TW11 (40-45)	SW8270	Caprolactam	<5.1	ug/l	UJ	Holding Time	1
LD14020	F39TW11 (40-45)	SW8270	4-Bromophenyl Phenyl Ether	<1.0	ug/l	UJ	Holding Time	1
LD14020	F39TW11 (40-45)	SW8270	Benzaldehyde	<5.1	ug/l	UJ	Holding Time	1
LD14020	F39TW11 (40-45)	SW8270	4-Nitrophenol	<5.1	ug/l	UJ	Holding Time	1
LD14020	F39TW11 (40-45)	SW8270	p-Nitroaniline	<2.0	ug/l	UJ	Holding Time	1
LD14020	F39TW11 (40-45)	SW8270	2,4-Dinitrophenol	<5.1	ug/l	UJ	Holding Time	1
LD14020	F39TW11 (40-45)	SW8270	p-Chloroaniline	<1.0	ug/l	UJ	Holding Time	1
LD14020	F39TW11 (40-45)	SW8270	Indeno(1,2,3-cd)pyrene	<1.0	ug/l	UJ	Holding Time	1
LD14020	F39TW11 (40-45)	SW8270	Dibenzo(a,h)anthracene	<1.0	ug/l	UJ	Holding Time	1
LD14020	F39TW11 (40-45)	SW8270	4,6-Dinitro-2-methylphenol	<5.1	ug/l	UJ	Holding Time	1
LD14020	F39TW11 (40-45)	SW8270	Benzo(a)pyrene	<1.0	ug/l	UJ	Holding Time	1
LD14020	F39TW11 (40-45)	SW8270	Acenaphthylene	<1.0	ug/l	UJ	Holding Time	1

SDG	Sample ID	Method	Analyte	Result	Units	Qualifier	Reason	Dilution
LD14020	F39TW11 (40-45)	SW8270	Benzo(k)fluoranthene	<1.0	ug/l	UJ	Holding Time	1
LD14020	F39TW11 (40-45)	SW8270	bis(2-Ethylhexyl)phthalate	<5.1	ug/l	UJ	Holding Time	1
LD14020	F39TW11 (40-45)	SW8270	Benzo(b)fluoranthene	<1.0	ug/l	UJ	Holding Time	1
LD14020	F39TW11 (40-45)	SW8270	Anthracene	<1.0	ug/l	UJ	Holding Time	1
LD14020	F39TW11 (40-45)	SW8270	Benzo(g,h,i)perylene	<1.0	ug/l	UJ	Holding Time	1
LD14020	F39TW11 (40-45)	SW8270	Atrazine	<1.0	ug/l	UJ	Holding Time	1
LD14020	F39TW11 (40-45)	SW8270	Dibenzofuran	<1.0	ug/l	UJ	Holding Time	1
LD14020	F39TW11 (40-45)	SW8270	Dimethyl Phthalate	<5.1	ug/l	UJ	Holding Time	1
LD14020	F39TW11 (40-45)	SW8270	Pyrene	<1.0	ug/l	UJ	Holding Time	1
LD14020	F39TW11 (40-45)	SW8270	2,4-Dinitrotoluene	<2.0	ug/l	UJ	Holding Time	1
LD14020	F39TW11 (40-45)	SW8270	2,4-Dichlorophenol	<1.0	ug/l	UJ	Holding Time	1
LD14020	F39TW11 (40-45)	SW8270	Fluoranthene	<1.0	ug/l	UJ	Holding Time	1
LD14020	F39TW12 (10-15)	SW8260	Acetone	3.6	ug/l	UB	Blank Contamination	1
LD14020	F39TW12 (10-15)	SW8260	Carbon disulfide	0.24	ug/l	UB	Blank Contamination	1
LD14020	F39TW12 (20-25)	SW8260	Acetone	4.8	ug/l	UB	Blank Contamination	1

SDG	Sample ID	Method	Analyte	Result	Units	Qualifier	Reason	Dilution
LD14020	F39TW12 (20-25)	SW8260	Carbon disulfide	0.45	ug/l	UB	Blank Contamination	1
LD14020	F39TW12 (30-35)	SW8260	Acetone	3.5	ug/l	UB	Blank Contamination	1
LD14020	F39TW12 (30-35)	SW8260	Carbon disulfide	0.19	ug/l	UB	Blank Contamination	1
LD14020	F39TW12 (40-45)	SW8260	Acetone	7.2	ug/l	UB	Blank Contamination	1
LD14020	F39TW12 (40-45)	SW8260	Carbon disulfide	0.19	ug/l	UB	Blank Contamination	1
LD14020	F39TW12 (40-45)	SW8270	Acenaphthene	<1.0	ug/l	R	Surrogate Recovery	1
LD14020	F39TW12 (40-45)	SW8270	Hexachloro-1,3-Butadiene	<1.0	ug/l	R	Surrogate Recovery	1
LD14020	F39TW12 (40-45)	SW8270	Carbazole	<1.0	ug/l	R	Surrogate Recovery	1
LD14020	F39TW12 (40-45)	SW8270	Fluorene	<1.0	ug/l	R	Surrogate Recovery	1
LD14020	F39TW12 (40-45)	SW8270	N-Nitrosodiphenylamine	<1.0	ug/l	R	Surrogate Recovery	1
LD14020	F39TW12 (40-45)	SW8270	Benzyl Butyl Phthalate	<5.1	ug/l	R	Surrogate Recovery	1
LD14020	F39TW12 (40-45)	SW8270	Phenanthrene	<1.0	ug/l	R	Surrogate Recovery	1
LD14020	F39TW12 (40-45)	SW8270	Diethyl phthalate	<5.1	ug/l	R	Surrogate Recovery	1
LD14020	F39TW12 (40-45)	SW8270	bis(2-Ethylhexyl)phthalate	<5.1	ug/l	R	Surrogate Recovery	1
LD14020	F39TW12 (40-45)	SW8270	3,5,5-Trimethyl-2-cyclohexene-1-one	<1.0	ug/l	R	Surrogate Recovery	1

SDG	Sample ID	Method	Analyte	Result	Units	Qualifier	Reason	Dilution
LD14020	F39TW12 (40-45)	SW8270	Hexachlorocyclopentadiene	<5.1	ug/l	R	Surrogate Recovery	1
LD14020	F39TW12 (40-45)	SW8270	4-Chlorophenyl Phenyl Ether	<1.0	ug/l	R	Surrogate Recovery	1
LD14020	F39TW12 (40-45)	SW8270	Hexachloroethane	<1.0	ug/l	R	Surrogate Recovery	1
LD14020	F39TW12 (40-45)	SW8270	N-Nitroso di-n-propylamine	<1.0	ug/l	R	Surrogate Recovery	1
LD14020	F39TW12 (40-45)	SW8270	2,6-Dinitroluene	<2.0	ug/l	R	Surrogate Recovery	1
LD14020	F39TW12 (40-45)	SW8270	Di-n-butyl phthalate	<5.1	ug/l	R	Surrogate Recovery	1
LD14020	F39TW12 (40-45)	SW8270	3,3'-Dichlorobenzidine	<5.1	ug/l	R	Surrogate Recovery	1
LD14020	F39TW12 (40-45)	SW8270	3-Nitroaniline	<2.0	ug/l	R	Surrogate Recovery	1
LD14020	F39TW12 (40-45)	SW8270	Nitrobenzene	<1.0	ug/l	R	Surrogate Recovery	1
LD14020	F39TW12 (40-45)	SW8270	Acetophenone	<1.0	ug/l	R	Surrogate Recovery	1
LD14020	F39TW12 (40-45)	SW8270	2,4,5-Trichlorophenol	<1.0	ug/l	UJ	Holding Time	1
LD14020	F39TW12 (40-45)	SW8270	2-Chlorophenol	<1.0	ug/l	UJ	Holding Time	1
LD14020	F39TW12 (40-45)	SW8270	Pentachlorophenol	<5.1	ug/l	UJ	Holding Time	1
LD14020	F39TW12 (40-45)	SW8270	1,1'-Biphenyl	<1.0	ug/l	R	Surrogate Recovery	1
LD14020	F39TW12 (40-45)	SW8270	2,4,6-Trichlorophenol	<1.0	ug/l	UJ	Holding Time	1

SDG	Sample ID	Method	Analyte	Result	Units	Qualifier	Reason	Dilution
LD14020	F39TW12 (40-45)	SW8270	2-Chloronaphthalene	<1.0	ug/l	R	Surrogate Recovery	1
LD14020	F39TW12 (40-45)	SW8270	2-Methyl naphthalene	<1.0	ug/l	R	Surrogate Recovery	1
LD14020	F39TW12 (40-45)	SW8270	Naphthalene	<1.0	ug/l	R	Surrogate Recovery	1
LD14020	F39TW12 (40-45)	SW8270	2-Nitrophenol	<2.0	ug/l	UJ	Holding Time	1
LD14020	F39TW12 (40-45)	SW8270	2-Nitroaniline	<2.0	ug/l	R	Surrogate Recovery	1
LD14020	F39TW12 (40-45)	SW8270	4-chloro-3-methylphenol	<1.0	ug/l	UJ	Holding Time	1
LD14020	F39TW12 (40-45)	SW8270	2-Methylphenol	<1.0	ug/l	UJ	Holding Time	1
LD14020	F39TW12 (40-45)	SW8270	m & p Cresol	<2.0	ug/l	UJ	Holding Time	1
LD14020	F39TW12 (40-45)	SW8270	Anthracene	<1.0	ug/l	R	Surrogate Recovery	1
LD14020	F39TW12 (40-45)	SW8270	Di-n-octyl phthalate	<5.1	ug/l	R	Surrogate Recovery	1
LD14020	F39TW12 (40-45)	SW8270	bis(2-Chloroethoxy)methane	<1.0	ug/l	R	Surrogate Recovery	1
LD14020	F39TW12 (40-45)	SW8270	bis(2-Chloroethoxy) ether	<1.0	ug/l	R	Surrogate Recovery	1
LD14020	F39TW12 (40-45)	SW8270	Phenol	<1.0	ug/l	UJ	Holding Time	1
LD14020	F39TW12 (40-45)	SW8270	Hexachlorobenzene	<1.0	ug/l	R	Surrogate Recovery	1
LD14020	F39TW12 (40-45)	SW8270	p-Chloroaniline	<1.0	ug/l	R	Surrogate Recovery	1

SDG	Sample ID	Method	Analyte	Result	Units	Qualifier	Reason	Dilution
LD14020	F39TW12 (40-45)	SW8270	Pyrene	<1.0	ug/l	R	Surrogate Recovery	1
LD14020	F39TW12 (40-45)	SW8270	2,4-Dimethylphenol	<1.0	ug/l	UJ	Holding Time	1
LD14020	F39TW12 (40-45)	SW8270	Caprolactam	<5.1	ug/l	R	Surrogate Recovery	1
LD14020	F39TW12 (40-45)	SW8270	4-Bromophenyl Phenyl Ether	<1.0	ug/l	R	Surrogate Recovery	1
LD14020	F39TW12 (40-45)	SW8270	Benzaldehyde	<5.1	ug/l	R	Surrogate Recovery	1
LD14020	F39TW12 (40-45)	SW8270	4-Nitrophenol	<5.1	ug/l	UJ	Holding Time	1
LD14020	F39TW12 (40-45)	SW8270	p-Nitroaniline	<2.0	ug/l	R	Surrogate Recovery	1
LD14020	F39TW12 (40-45)	SW8270	bis(2-chloroisopropyl) ether	<1.0	ug/l	R	Surrogate Recovery	1
LD14020	F39TW12 (40-45)	SW8270	Benzo(b)fluoranthene	<1.0	ug/l	R	Surrogate Recovery	1
LD14020	F39TW12 (40-45)	SW8270	Dibenzo(a,h)anthracene	<1.0	ug/l	R	Surrogate Recovery	1
LD14020	F39TW12 (40-45)	SW8270	4,6-Dinitro-2-methylphenol	<5.1	ug/l	UJ	Holding Time	1
LD14020	F39TW12 (40-45)	SW8270	2,4-Dinitrophenol	<5.1	ug/l	UJ	Holding Time	1
LD14020	F39TW12 (40-45)	SW8270	Benzo(a)pyrene	<1.0	ug/l	R	Surrogate Recovery	1
LD14020	F39TW12 (40-45)	SW8270	1,2-Benz-phenanthracene	<1.0	ug/l	R	Surrogate Recovery	1
LD14020	F39TW12 (40-45)	SW8270	Acenaphthylene	<1.0	ug/l	R	Surrogate Recovery	1

SDG	Sample ID	Method	Analyte	Result	Units	Qualifier	Reason	Dilution
LD14020	F39TW12 (40-45)	SW8270	2,4-Dichlorophenol	<1.0	ug/l	UJ	Holding Time	1
LD14020	F39TW12 (40-45)	SW8270	Fluoranthene	<1.0	ug/l	R	Surrogate Recovery	1
LD14020	F39TW12 (40-45)	SW8270	2,4-Dinitrotoluene	<2.0	ug/l	R	Surrogate Recovery	1
LD14020	F39TW12 (40-45)	SW8270	Indeno(1,2,3-cd)pyrene	<1.0	ug/l	R	Surrogate Recovery	1
LD14020	F39TW12 (40-45)	SW8270	Benzo(g,h,i)perylene	<1.0	ug/l	R	Surrogate Recovery	1
LD14020	F39TW12 (40-45)	SW8270	Atrazine	<1.0	ug/l	R	Surrogate Recovery	1
LD14020	F39TW12 (40-45)	SW8270	Dibenzofuran	<1.0	ug/l	R	Surrogate Recovery	1
LD14020	F39TW12 (40-45)	SW8270	Dimethyl Phthalate	<5.1	ug/l	R	Surrogate Recovery	1
LD14020	F39TW12 (40-45)	SW8270	Benzo(a)anthracene	<1.0	ug/l	R	Surrogate Recovery	1
LD14020	F39TW12 (40-45)	SW8270	Benzo(k)fluoranthene	<1.0	ug/l	R	Surrogate Recovery	1

HUNTER STEWART
ELECTRONIC VALIDATION REVIEW REPORT
SDGs: LI17017 and LI16010
FST-39

Analytical data were evaluated in accordance with applicable USEPA SW-846 method requirements, "USEPA Contract Laboratory Program National Functional Guidelines for Organic Data Review" (October 1999), analytical method control criteria, the analytical laboratory Quality Assurance Control Limits, the Fort Stewart Military Reservation and Hunter Army Airfield Quality Assurance Project Plan (ARCADIS-2008), and professional judgment.

The data review summarized in this report includes a review of all sample collection documentation and the electronic data validation of the analytical data housed in the project database. Sample collection documentation included sample collection logs and chains of custody. The electronic data validation was performed utilizing the EQuIS Data Qualification Module (DQM). DQM checks for the following parameters:

- Holding times and preservation;
- Blank contamination;
    1. Method blanks,
    2. Trip blanks,
    3. Equipment blanks;
- Matrix spike and Duplicate sample recovery;
- Matrix Spike and Matrix Spike Duplicate relative percent differences;
- Laboratory Control Sample and Duplicate recovery;
- Laboratory Control Sample and Duplicate relative percent differences;
- Surrogate recovery (organic analyses only); and
- Field duplicate relative percent difference.

Manual review was performed for the following items:

- Sample dilutions and reporting limits;
- Case Narratives; and
- Laboratory Duplicates

Data was generated by Shealy Environmental Services, Inc. – West Columbia, South Carolina and Test America – Savannah Laboratories. Data qualifiers were applied electronically to the database with any additional qualifiers added manually. A summary of the data as amended by data qualifiers is included with the original hard copy reports.

The attached table summarizes the data that were qualified due to QC deficiencies. The table indicates compounds/analytes qualified based on electronic and manual validation. Refer to the associated method section of the validation checklist for a detailed explanation of qualification. All other data in these SDGs are considered usable as reported.

HUNTER STEWART
ELECTRONIC VALIDATION REVIEW REPORT
SDGs: LI17017 and LI16010
FST-39

The following list of data qualifiers and definitions were applied in accordance with qualification criteria defined in the greater than guidance documents:

UB Compound/analyte detected in blank or associated blank, qualified as a non-detect at listed value.

J The analyte was positively identified, but the associated numerical value is the approximate concentration of the analyte in the sample.

UJ The analyte was not detected greater than the reporting limit; however, the reported quantitation limit is approximate and may, or may not represent the actual limit of quantitation necessary to accurately and precisely measure analyte in the sample.

R The sample result is rejected due to serious deficiencies in the ability to analyze the sample and meet quality control criteria; and the presence or absence of the analyte cannot be verified.

U Not detected at the quantitative reporting limit

DQM RUN BY:	Rachelle Borne	09/27/10
REVIEW PERFORMED BY:	Rachelle Borne	09/27/10
SIGNATURE:	Rachelle Borne	09/27/10
PEER REVIEW:	Dennis Capria	09/28/10

HUNTER STEWART
ELECTRONIC VALIDATION REVIEW REPORT
SDGs: LI17017 and LI16010
FST-39

The following samples were included in this validation:

SDG	Sample ID	Sample Date	Parent Sample
LI16010	F39TWS13 (30-32)(091410)	9/14/2010	
LI16010	F39TWS13 (32-34)(091410)	9/14/2010	
LI16010	F39TWS13 (34-36)(091410)	9/14/2010	
LI16010	F39TWS13 (36-38)(091410)	9/14/2010	
LI16010	F39TWS13 (38-40)(091410)	9/14/2010	
LI16010	F39TWS13 (40-42)(091410)	9/14/2010	
LI16010	F39TWS13 (42-44)(091410)	9/14/2010	
LI16010	F39TWS13 (44-46)(091410)	9/14/2010	
LI16010	F39TWS13 (46-48)(091410)	9/14/2010	
LI16010	F39TWS13 (48-50)(091410)	9/14/2010	
LI16010	F39TWS13 (50-52)(091410)	9/14/2010	
LI16010	F39TWS13 (52-54)(091410)	9/14/2010	
LI16010	F39TWS13 (54-56)(091410)	9/14/2010	
LI16010	F39TWS13 (56-58)(091410)	9/14/2010	
LI16010	F39TWS13 (58-60)(091410)	9/14/2010	
LI16010	F39TWS13 (60-62)(091410)	9/14/2010	
LI16010	F39TWS13 (62-64)(091410)	9/14/2010	
LI16010	F39TWS13 (64-66)(091410)	9/14/2010	
LI16010	F39TWS13 (66-68)(091410)	9/14/2010	
LI16010	F39TWS13 (68-70)(091410)	9/14/2010	
LI17017	F39TWW13 (30-35)	9/15/2010	
LI17017	F39TWW13 (35-40)	9/15/2010	
LI17017	F39TWW13 (40-45)	9/15/2010	
LI17017	F39TWW13 (45-50)	9/15/2010	
LI17017	F39TWW13 (50-55)	9/15/2010	
LI17017	Trip Blank	9/15/2010	
LI17017	F39TWW13 -DUP	9/15/2010	F39TWW13 (40-45)

HUNTER STEWART
ELECTRONIC VALIDATION REVIEW REPORT
SDGs: LI17017 and LI16010
FST-39

ANALYTICAL DATA PACKAGE DOCUMENTATION

GENERAL INFORMATION

Items Reviewed	Reported		Performance Acceptable		Not Required
	No	Yes	No	Yes	
1. Sample results		X		X	
2. Parameters analyzed		X		X	
3. Methods of analysis		X		X	
4. Reporting limits of analysis		X		X	
5. Master tracking list		X		X	
6. Sample collection date		X		X	
7. Laboratory sample received date		X		X	
8. Sample preparation/extraction date		X		X	
9. Sample analysis date		X		X	
10. Copy of chain-of-custody form signed by lab sample custodian		X		X	
11. Narrative summary of QA or sample problems provided		X		X	
12. Laboratory Signature		X		X	
13. South Carolina Certification Number		X		X	

QA - quality assurance

The analytical report was complete with the following exceptions or notations.

Note: The laboratory reported values between the quantitative reporting limit and the method detection limit as estimated concentrations. The "J" qualifier was retained in this validation. Non-detect values are reported at the quantitative reporting limit.

HUNTER STEWART
ELECTRONIC VALIDATION REVIEW REPORT
SDGs: LI17017 and LI16010
FST-39

VOLATILE ORGANIC COMPOUNDS

Items Reviewed	DQM Deficiency		Qualification Applied	
	No	Yes	No	Yes
1. Holding times/Preservation	DQM		DQM	
2. Reporting limits	M		M	
3. Blanks				
A. Method blanks	DQM		DQM	
B. Equipment blanks	NA		NA	
C. Trip blanks		DQM		DQM
4. Surrogate spike recoveries	DQM		DQM	
5. Laboratory control sample (LCS) A. LCS %R		DQM		DQM
B. LCS duplicate (LCSD) %R		DQM		DQM
C. LCS/LCSD RPD	DQM		DQM	
6. Matrix spike (MS)				
A. MS %R	NA		NA	
B. MS duplicate (MSD) %R	NA		NA	
C. MS/MSD precision (RPD)	NA		NA	
7. Field Duplicate precision (RPD)	DQM		DQM	

M – Manual Review %R - percent recovery RPD - relative percent difference DQM – Data Qualification Module

Comments:
This section presents a discussion of any additions or changes to the electronic data validation for compounds analyzed by Method 8260B.

2. SDG (LD09018) Several samples required dilutions due to elevated concentrations of target analytes. There were elevated reporting limits for non-detect results.

3C. SDG (LI17017) Acetone was detected in the trip blank. The associated field samples were qualified as non-detect for acetone if the sample concentration was less than ten times the blank value.

5. SDG (LI17017) The recovery of the compound bromomethane was below the control limit in the LCS and the LCSD. The associated field samples were qualified as estimated for bromomethane.

7. SDG (LI17017) Sample location F39TWW13-DUP was collected as a field duplicate of F39TWW13(40-45). The RPDs were acceptable at less than 40%.

Hunter Stewart
FST-39

SDG	Sample ID	Method	Analyte	Result	Units	Qualifier	Reason	Dilution
LI17017	F39TWW13 (30-35)	SW8260	Bromomethane	<0.50	ug/l	UJ	LCS/LCSD Recovery	1
LI17017	F39TWW13 (35-40)	SW8260	Bromomethane	<2.5	ug/l	UJ	LCS/LCSD Recovery	5
LI17017	F39TWW13 (40-45)	SW8260	Bromomethane	<0.50	ug/l	UJ	LCS/LCSD Recovery	1
LI17017	F39TWW13 (40-45)	SW8260	Acetone	10	ug/l	UB	Blank Contamination	1
LI17017	F39TWW13 (45-50)	SW8260	Bromomethane	<0.50	ug/l	UJ	LCS/LCSD Recovery	1
LI17017	F39TWW13 (50-55)	SW8260	Bromomethane	<0.50	ug/l	UJ	LCS/LCSD Recovery	1
LI17017	F39TWW13 -DUP	SW8260	Bromomethane	<0.50	ug/l	UJ	LCS/LCSD Recovery	1
LI17017	Trip Blank	SW8260	Bromomethane	<0.50	ug/l	UJ	LCS/LCSD Recovery	1

HUNTER STEWART
ELECTRONIC VALIDATION REVIEW REPORT
SDGs: LK03046, LK04016, LK05005, LK06009, LK10010 and LK11004
FST-39

Analytical data were evaluated in accordance with applicable USEPA SW-846 method requirements, "USEPA Contract Laboratory Program National Functional Guidelines for Organic Data Review" (October 1999), analytical method control criteria, the analytical laboratory Quality Assurance Control Limits, the Fort Stewart Military Reservation and Hunter Army Airfield Quality Assurance Project Plan (ARCADIS-2008), and professional judgment.

The data review summarized in this report includes a review of all sample collection documentation and the electronic data validation of the analytical data housed in the project database. Sample collection documentation included sample collection logs and chains of custody. The electronic data validation was performed utilizing the EQuIS Data Qualification Module (DQM). DQM checks for the following parameters:

- Holding times and preservation;
- Blank contamination;
    1. Method blanks,
    2. Trip blanks,
    3. Equipment blanks;
- Matrix spike and Duplicate sample recovery;
- Matrix Spike and Matrix Spike Duplicate relative percent differences;
- Laboratory Control Sample and Duplicate recovery;
- Laboratory Control Sample and Duplicate relative percent differences;
- Surrogate recovery (organic analyses only); and
- Field duplicate relative percent difference.

Manual review was performed for the following items:

- Sample dilutions and reporting limits;
- Case Narratives; and
- Laboratory Duplicates

Data was generated by Shealy Environmental Services, Inc. – West Columbia, South Carolina. Data qualifiers were applied electronically to the database with any additional qualifiers added manually. A summary of the data as amended by data qualifiers is included with the original hard copy reports.

The attached table summarizes the data that were qualified due to QC deficiencies. The table indicates compounds/analytes qualified based on electronic and manual validation. Refer to the associated method section of the validation checklist for a detailed explanation of qualification. All other data in these SDGs are considered usable as reported.

HUNTER STEWART
ELECTRONIC VALIDATION REVIEW REPORT
SDGs: LK03046, LK04016, LK05005, LK06009, LK10010 and LK11004
FST-39

The following list of data qualifiers and definitions were applied in accordance with qualification criteria defined in the greater than guidance documents:

UB Compound/analyte detected in blank or associated blank, qualified as a non-detect at listed value.

J The analyte was positively identified, but the associated numerical value is the approximate concentration of the analyte in the sample.

UJ The analyte was not detected greater than the reporting limit; however, the reported quantitation limit is approximate and may, or may not represent the actual limit of quantitation necessary to accurately and precisely measure analyte in the sample.

R The sample result is rejected due to serious deficiencies in the ability to analyze the sample and meet quality control criteria; and the presence or absence of the analyte cannot be verified.

U Not detected at the quantitative reporting limit

DQM RUN BY:	Rachelle Borne	01/18/11
REVIEW PERFORMED BY:	Rachelle Borne	01/20/11
SIGNATURE:	Rachelle Borne	01/20/11
PEER REVIEW:	Dennis Capria	1/27/2011

HUNTER STEWART
ELECTRONIC VALIDATION REVIEW REPORT
SDGs: LK03046, LK04016, LK05005, LK06009, LK10010 and LK11004
FST-39

The following samples were included in this validation:

SDG	Sample ID	Sample Date	Parent Sample
LK03046	B-2 (30-34')-20101102	11/2/2010	
LK03046	B-2 (36-40')-20101102	11/2/2010	
LK03046	B-2 (42-46')-20101102	11/2/2010	
LK03046	D-25 (30-34')-20101102	11/2/2010	
LK03046	D-25 (36-40')-20101102	11/2/2010	
LK03046	D-26 (33-35')-20101102	11/2/2010	
LK03046	Trip Blank-20101103	11/3/2010	
LK04016	Trip Blank-20101104	11/4/2010	
LK04016	B-5 (30-34')-20101103	11/3/2010	
LK04016	B-5 (36-40')-20101103	11/3/2010	
LK04016	B-5 (42-46')-20101103	11/3/2010	
LK04016	C-12 (30-34')-20101103	11/3/2010	
LK04016	C-12 (36-40')-20101103	11/3/2010	
LK04016	C-12 (42-46')-20101103	11/3/2010	
LK04016	D-25 (42-46')-20101102	11/2/2010	
LK05005	C-14 (30-34')-20101104	11/4/2010	
LK05005	C-14 (36-40')-20101104	11/4/2010	
LK05005	C-14 (42-46')-20101104	11/4/2010	
LK05005	D-23 (30-34')-20101104	11/4/2010	
LK05005	D-23 (36-40')-20101104	11/4/2010	
LK05005	D-23 (42-46')-20101104	11/4/2010	
LK05005	D-30 (30-34')-20101103	11/3/2010	
LK05005	D-30 (36-40')-20101103	11/3/2010	
LK05005	D-30 (42-46')-20101103	11/3/2010	
LK05005	Trip Blank-20101105	11/5/2010	
LK06009	DP-27 (30-34')-20101105	11/5/2010	
LK06009	DP-27 (36-40')-20101105	11/5/2010	
LK06009	DP-27 (42-46')-20101105	11/5/2010	
LK06009	DP-28 (30-34')-20101105	11/5/2010	
LK06009	DP-28 (42-46')-20101105	11/5/2010	
LK06009	TRIP BLANK-20101106	11/6/2010	
LK10010	E-11 (30-34)-20101108	11/8/2010	
LK10010	E-11 (36-40)-20101108	11/8/2010	
LK10010	E-11 (42-46)-20101108	11/8/2010	
LK10010	E-7 (30-34)-20101108	11/8/2010	
LK10010	E-7 (42-46)-20101108	11/8/2010	
LK11004	B-6 (30-34)-20101109	11/9/2010	
LK11004	B-6 (36-40)-20101109	11/9/2010	
LK11004	E-10 (30-34)-20101110	11/10/2010	
LK11004	E-10 (36-40)-20101110	11/10/2010	
LK11004	E-10 (42-46)-20101110	11/10/2010	
LK11004	E-8 (30-34)-20101109	11/9/2010	

HUNTER STEWART
ELECTRONIC VALIDATION REVIEW REPORT
SDGs: LK03046, LK04016, LK05005, LK06009, LK10010 and LK11004
FST-39

SDG	Sample ID	Sample Date	Parent Sample
LK11004	E-8 (36-40)-20101109	11/9/2010	
LK11004	E-8 (42-46)-20101109	11/9/2010	
LK11004	E-9 (30-34)-20101110	11/10/2010	
LK11004	E-9 (36-40)-20101110	11/10/2010	
LK11004	E-9 (42-46)-20101110	11/10/2010	
LK11004	Trip Blank-20101110	11/10/2010	
LK12004	FB6-SL-20101111	11/11/2010	

HUNTER STEWART
ELECTRONIC VALIDATION REVIEW REPORT
SDGs: LK03046, LK04016, LK05005, LK06009, LK10010 and LK11004
FST-39

ANALYTICAL DATA PACKAGE DOCUMENTATION

GENERAL INFORMATION

Items Reviewed	Reported		Performance Acceptable		Not Required
	No	Yes	No	Yes	
1. Sample results		X		X	
2. Parameters analyzed		X		X	
3. Methods of analysis		X		X	
4. Reporting limits of analysis		X		X	
5. Master tracking list		X		X	
6. Sample collection date		X		X	
7. Laboratory sample received date		X		X	
8. Sample preparation/extraction date		X		X	
9. Sample analysis date		X		X	
10. Copy of chain-of-custody form signed by lab sample custodian		X		X	
11. Narrative summary of QA or sample problems provided		X		X	
12. Laboratory Signature		X		X	
13. South Carolina Certification Number		X		X	

QA - quality assurance

The analytical report was complete with the following exceptions or notations.

Note: The laboratory reported values between the quantitative reporting limit and the method detection limit as estimated concentrations. The "J" qualifier was retained in this validation. Non-detect values are reported at the quantitative reporting limit.

HUNTER STEWART
ELECTRONIC VALIDATION REVIEW REPORT
SDGs: LK03046, LK04016, LK05005, LK06009, LK10010 and LK11004
FST-39

VOLATILE ORGANIC COMPOUNDS

Items Reviewed	DQM Deficiency		Qualification Applied	
	No	Yes	No	Yes
1. Holding times/Preservation	DQM		DQM	
2. Reporting limits	M		M	
3. Blanks				
A. Method blanks		DQM		DQM
B. Equipment blanks	NA		NA	
C. Trip blanks		DQM		DQM
4. Surrogate spike recoveries	DQM		DQM	
5. Laboratory control sample (LCS) A. LCS %R		DQM		DQM
B. LCS duplicate (LCSD) %R	DQM		DQM	
C. LCS/LCSD RPD		DQM		DQM
6. Matrix spike (MS)				
A. MS %R	NA		NA	
B. MS duplicate (MSD) %R	NA		NA	
C. MS/MSD precision (RPD)	NA		NA	
7. Field Duplicate precision (RPD)	NA		NA	

M – Manual Review %R - percent recovery RPD - relative percent difference DQM – Data Qualification Module

Comments:
This section presents a discussion of any additions or changes to the electronic data validation for compounds analyzed by Method 8260B.

Note: SDG (LK04016) Sample locations D-25(42-26), C-12(42-46) and B-5(30-34) were received in VOA vials preserved with hydrochloric acid; however, the samples were too muddy to be analyzed as waters. Per ARCADIS the samples were analyzed and reported as solids.

2. Several samples required dilutions due to elevated concentrations of target analytes. There were elevated reporting limits for non-detect results.

3A. SDG (LK04016) Bromoform and 1,2,4-tichlorobenzene were detected in the method blank for batch 46104. The associated field samples were qualified as non-detect for these compounds if the sample concentrations were less than five times the blank values.

SDG (LK04016) Toluene was detected in the method blank for batch 46137. The associated field samples were qualified as non-detect for this compound if the sample concentrations were less than five times the blank value.

SDG (LK06009) Toluene was detected in the method blank for batch 46375. The associated field samples were qualified as non-detect for this compound if the sample concentrations were less than five times the blank value.

3C. SDG (LK04016) Acetone and bromoform were detected in the trip blank. The associated field samples were qualified as non-detect for these compounds if the sample concentrations were less than ten times the blank values for acetone and less than five times the blank values for bromoform.

SDG (LK05005) Carbon disulfide was detected in the trip blank. The associated field samples were qualified as non-detect for this compound if the sample concentrations were less than five times the blank value.

SDG (LK06009) Acetone was detected in the trip blank. The associated field samples were qualified as non-detect for this compound if the sample concentrations were less than ten times the blank value.

SDG (LK10010) Acetone was detected in the trip blank. The associated field samples were qualified as non-detect for this compound if the sample concentrations were less than ten times the blank value.

SDG (LK11004) Carbon disulfide and 1,2,4-trichlorobenzene were detected in the trip blank. The associated field samples were non-detect for these compounds; therefore, qualification of the data was not warranted.

5. SDG (LK03046, LK04016 and LK05005) The recovery of methyl acetate was above the control limit in the LCS for batch 45932. The associated field samples were non-detect for methyl acetate; therefore, qualification of the data was not warranted. The RPDs between the LCS/LCSD pair were above the control limit for methyl acetate, bromomethane and vinyl chloride. The associated field samples were qualified as estimated for these compounds.

   SDG (LK10010 and LK11004) The RPDs between the LCS/LCSD pair were above the control limit for 2-butanone, carbon disulfide, cyclohexane, 1,1-dichloroethane, trans-1,2-dichloroethene, cis-1,2-dichloroethene, methyl acetate, MTBE and methylene chloride for batch 46389. The associated field sample was qualified as estimated for these compounds.

SDG	Sample ID	Method	Analyte	Result	Units	Qualifier	Reason	Dilution
LK03046	B-2 (30-34')-20101102	SW8260	Bromomethane	<0.50	ug/l	UJ	LCS/LCSD RPD	1
LK03046	B-2 (30-34')-20101102	SW8260	Vinyl Chloride	<0.50	ug/l	UJ	LCS/LCSD RPD	1
LK03046	B-2 (30-34')-20101102	SW8260	Methyl acetate	<1.0	ug/l	UJ	LCS/LCSD RPD	1
LK03046	B-2 (36-40')-20101102	SW8260	Bromomethane	<0.50	ug/l	UJ	LCS/LCSD RPD	1
LK03046	B-2 (36-40')-20101102	SW8260	Vinyl Chloride	<0.50	ug/l	UJ	LCS/LCSD RPD	1
LK03046	B-2 (36-40')-20101102	SW8260	Methyl acetate	<1.0	ug/l	UJ	LCS/LCSD RPD	1
LK03046	B-2 (42-46')-20101102	SW8260	Bromomethane	<0.50	ug/l	UJ	LCS/LCSD RPD	1
LK03046	B-2 (42-46')-20101102	SW8260	Vinyl Chloride	<0.50	ug/l	UJ	LCS/LCSD RPD	1
LK03046	B-2 (42-46')-20101102	SW8260	Methyl acetate	<1.0	ug/l	UJ	LCS/LCSD RPD	1
LK03046	D-25 (30-34')-20101102	SW8260	Bromomethane	<5.0	ug/l	UJ	LCS/LCSD RPD	10
LK03046	D-25 (30-34')-20101102	SW8260	Vinyl Chloride	<5.0	ug/l	UJ	LCS/LCSD RPD	10
LK03046	D-25 (30-34')-20101102	SW8260	Methyl acetate	<10.0	ug/l	UJ	LCS/LCSD RPD	10
LK03046	D-25 (36-40')-20101102	SW8260	Methyl acetate	<1.0	ug/l	UJ	LCS/LCSD RPD	1
LK03046	D-25 (36-40')-20101102	SW8260	Bromomethane	<0.50	ug/l	UJ	LCS/LCSD RPD	1
LK03046	D-25 (36-40')-20101102	SW8260	Vinyl Chloride	0.81	ug/l	J	LCS/LCSD RPD	1

SDG	Sample ID	Method	Analyte	Result	Units	Qualifier	Reason	Dilution
LK03046	D-26 (33-35')-20101102	SW8260	Methyl acetate	<10.0	ug/l	UJ	LCS/LCSD RPD	10
LK03046	D-26 (33-35')-20101102	SW8260	Vinyl Chloride	<5.0	ug/l	UJ	LCS/LCSD RPD	10
LK03046	D-26 (33-35')-20101102	SW8260	Bromomethane	<5.0	ug/l	UJ	LCS/LCSD RPD	10
LK04016	B-5 (30-34')-20101103	SW8260	Vinyl Chloride	<0.50	ug/l	UJ	LCS/LCSD RPD	1
LK04016	B-5 (30-34')-20101103	SW8260	Methyl acetate	<1.0	ug/l	UJ	LCS/LCSD RPD	1
LK04016	B-5 (30-34')-20101103	SW8260	Bromomethane	<0.50	ug/l	UJ	LCS/LCSD RPD	1
LK04016	B-5 (36-40')-20101103	SW8260	Bromomethane	<0.50	ug/l	UJ	LCS/LCSD RPD	1
LK04016	B-5 (36-40')-20101103	SW8260	Vinyl Chloride	<0.50	ug/l	UJ	LCS/LCSD RPD	1
LK04016	B-5 (36-40')-20101103	SW8260	Methyl acetate	<1.0	ug/l	UJ	LCS/LCSD RPD	1
LK04016	B-5 (42-46')-20101103	SW8260	Toluene	0.69	ug/l	UB	Blank Contamination	1
LK04016	B-5 (42-46')-20101103	SW8260	Acetone	19	ug/l	UB	Blank Contamination	1
LK04016	C-12 (30-34')-20101103	SW8260	Vinyl Chloride	<0.50	ug/l	UJ	LCS/LCSD RPD	1
LK04016	C-12 (30-34')-20101103	SW8260	Methyl acetate	<1.0	ug/l	UJ	LCS/LCSD RPD	1
LK04016	C-12 (30-34')-20101103	SW8260	Bromomethane	<0.50	ug/l	UJ	LCS/LCSD RPD	1
LK04016	C-12 (30-34')-20101103	SW8260	Acetone	4.5	ug/l	UB	Blank Contamination	1

SDG	Sample ID	Method	Analyte	Result	Units	Qualifier	Reason	Dilution
LK04016	C-12 (36-40')-20101103	SW8260	Bromomethane	<0.50	ug/l	UJ	LCS/LCSD RPD	1
LK04016	C-12 (36-40')-20101103	SW8260	Vinyl Chloride	<0.50	ug/l	UJ	LCS/LCSD RPD	1
LK04016	C-12 (36-40')-20101103	SW8260	Methyl acetate	<1.0	ug/l	UJ	LCS/LCSD RPD	1
LK04016	C-12 (36-40')-20101103	SW8260	Acetone	9.1	ug/l	UB	Blank Contamination	1
LK04016	C-12 (42-46')-20101103	SW8260	1,2,4-Trichlorobenzene	1.7	ug/kg	UB	Blank Contamination	1
LK04016	D-25 (42-46')-20101102	SW8260	Toluene	1.8	ug/l	UB	Blank Contamination	1
LK04016	D-25 (42-46')-20101102	SW8260	Acetone	20	ug/l	UB	Blank Contamination	1
LK05005	C-14 (36-40')-20101104	SW8260	Carbon disulfide	0.6	ug/l	UB	Blank Contamination	2
LK05005	D-23 (30-34')-20101104	SW8260	Carbon disulfide	0.52	ug/l	UB	Blank Contamination	1
LK05005	D-23 (36-40')-20101104	SW8260	Carbon disulfide	0.7	ug/l	UB	Blank Contamination	1
LK05005	D-30 (30-34')-20101103	SW8260	Carbon disulfide	0.44	ug/l	UB	Blank Contamination	1
LK06009	DP-27 (30-34')-20101105	SW8260	Toluene	0.65	ug/l	UB	Blank Contamination	1
LK06009	DP-27 (30-34')-20101105	SW8260	Acetone	7.3	ug/l	UB	Blank Contamination	1
LK06009	DP-27 (36-40')-20101105	SW8260	Toluene	0.9	ug/l	UB	Blank Contamination	1
LK06009	DP-27 (36-40')-20101105	SW8260	Acetone	6.7	ug/l	UB	Blank Contamination	1

SDG	Sample ID	Method	Analyte	Result	Units	Qualifier	Reason	Dilution
LK06009	DP-27 (42-46')-20101105	SW8260	Acetone	15	ug/l	UB	Blank Contamination	1
LK06009	DP-28 (30-34')-20101105	SW8260	Toluene	0.66	ug/l	UB	Blank Contamination	1
LK06009	DP-28 (30-34')-20101105	SW8260	Acetone	7	ug/l	UB	Blank Contamination	1
LK06009	DP-28 (42-46')-20101105	SW8260	Acetone	30	ug/l	UB	Blank Contamination	1
LK10010	E-11 (36-40)-20101108	SW8260	Acetone	45	ug/l	UB	Blank Contamination	1
LK10010	E-11 (42-46)-20101108	SW8260	Acetone	20	ug/l	UB	Blank Contamination	1
LK10010	E-7 (30-34)-20101108	SW8260	Acetone	9.3	ug/l	UB	Blank Contamination	1
LK10010	E-7 (42-46)-20101108	SW8260	Acetone	47	ug/l	UB	Blank Contamination	1
LK10010	Trip Blank-20101110	SW8260	Cyclohexane	<0.50	ug/l	UJ	LCS/ICSD RPD	1
LK10010	Trip Blank-20101110	SW8260	Methyl acetate	<1.0	ug/l	UJ	LCS/ICSD RPD	1
LK10010	Trip Blank-20101110	SW8260	Methylene Chloride	<0.50	ug/l	UJ	LCS/ICSD RPD	1
LK10010	Trip Blank-20101110	SW8260	trans-1,2-Dichloroethene	<0.50	ug/l	UJ	LCS/ICSD RPD	1
LK10010	Trip Blank-20101110	SW8260	Carbon disulfide	<0.50	ug/l	UJ	LCS/ICSD RPD	1
LK10010	Trip Blank-20101110	SW8260	1,1-Dichloroethane	<0.50	ug/l	UJ	LCS/ICSD RPD	1
LK10010	Trip Blank-20101110	SW8260	cis-1,2-Dichloroethene	<0.50	ug/l	UJ	LCS/ICSD RPD	1

SDG	Sample ID	Method	Analyte	Result	Units	Qualifier	Reason	Dilution
LK10010	Trip Blank-20101110	SW8260	2-Butanone (MEK)	<10.0	ug/l	UJ	LCS/ICSD RPD	1
LK10010	Trip Blank-20101110	SW8260	Methyl tert-butyl ether	<0.50	ug/l	UJ	LCS/ICSD RPD	1
LK11004	Trip BlankA-20101110	SW8260	Methyl acetate	<1.0	ug/l	UJ	LCS/ICSD RPD	1
LK11004	Trip BlankA-20101110	SW8260	2-Butanone (MEK)	<10.0	ug/l	UJ	LCS/ICSD RPD	1
LK11004	Trip BlankA-20101110	SW8260	1,1-Dichloroethane	<0.50	ug/l	UJ	LCS/ICSD RPD	1
LK11004	Trip BlankA-20101110	SW8260	Carbon disulfide	0.37	ug/l	J	LCS/ICSD RPD	1
LK11004	Trip BlankA-20101110	SW8260	Methylene Chloride	<0.50	ug/l	UJ	LCS/ICSD RPD	1
LK11004	Trip BlankA-20101110	SW8260	Methyl tert-butyl ether	<0.50	ug/l	UJ	LCS/ICSD RPD	1
LK11004	Trip BlankA-20101110	SW8260	trans-1,2-Dichloroethene	<0.50	ug/l	UJ	LCS/ICSD RPD	1
LK11004	Trip BlankA-20101110	SW8260	Cyclohexane	<0.50	ug/l	UJ	LCS/ICSD RPD	1
LK11004	Trip BlankA-20101110	SW8260	cis-1,2-Dichloroethene	<0.50	ug/l	UJ	LCS/ICSD RPD	1

HUNTER STEWART
ELECTRONIC VALIDATION REVIEW REPORT
SDG: MI01005
FST-39

Analytical data were evaluated in accordance with applicable USEPA SW-846 method requirements, "USEPA Contract Laboratory Program National Functional Guidelines for Organic Data Review" (October 1999), analytical method control criteria, the analytical laboratory Quality Assurance Control Limits, the Fort Stewart Military Reservation and Hunter Army Airfield Quality Assurance Project Plan (ARCADIS-2008), and professional judgment.

The data review summarized in this report includes a review of all sample collection documentation and the electronic data validation of the analytical data housed in the project database. Sample collection documentation included sample collection logs and chains of custody. The electronic data validation was performed utilizing the EQuIS Data Qualification Module (DQM). DQM checks for the following parameters:

- Holding times and preservation;
- Blank contamination;
    1. Method blanks,
    2. Trip blanks,
    3. Equipment blanks;
- Matrix spike and Duplicate sample recovery;
- Matrix Spike and Matrix Spike Duplicate relative percent differences;
- Laboratory Control Sample and Duplicate recovery;
- Laboratory Control Sample and Duplicate relative percent differences;
- Surrogate recovery (organic analyses only); and
- Field duplicate relative percent difference.

Manual review was performed for the following items:

- Sample dilutions and reporting limits;
- Case Narratives; and
- Laboratory Duplicates

Data was generated by Shealy Environmental Services, Inc. – West Columbia, South Carolina. Data qualifiers were applied electronically to the database with any additional qualifiers added manually. A summary of the data as amended by data qualifiers is included with the original hard copy reports.

The attached table summarizes the data that were qualified due to QC deficiencies. The table indicates compounds/analytes qualified based on electronic and manual validation. Refer to the associated method section of the validation checklist for a detailed explanation of qualification. All other data in these SDGs are considered usable as reported.

HUNTER STEWART
ELECTRONIC VALIDATION REVIEW REPORT
SDG: MI01005
FST-39

The following list of data qualifiers and definitions were applied in accordance with qualification criteria defined in the greater than guidance documents:

UB Compound/analyte detected in blank or associated blank, qualified as a non-detect at listed value.

J The analyte was positively identified, but the associated numerical value is the approximate concentration of the analyte in the sample.

UJ The analyte was not detected greater- than the reporting limit; however, the reported quantitation limit is approximate and may, or may not represent the actual limit of quantitation necessary to accurately and precisely measure analyte in the sample.

R The sample result is rejected due to serious deficiencies in the ability to analyze the sample and meet quality control criteria; and the presence or absence of the analyte cannot be verified.

U Not detected at the quantitative reporting limit

DQM RUN BY:	Rachelle Borne	10/31/11
REVIEW PERFORMED BY:	Rachelle Borne	10/31/11
SIGNATURE:	Rachelle Borne	10/31/11
PEER REVIEW:	Todd Church	11/3/11

HUNTER STEWART
ELECTRONIC VALIDATION REVIEW REPORT
SDG: MI01005
FST-39

The following samples were included in this validation:

SDG	Sample ID	Sample Date	Parent Sample
MI01005	G4MW055(083011)	08/30/11	
MI01005	G4MW057(083011)	08/30/11	
MI01005	G4MW056(083111)	08/31/11	
MI01005	Trip Blank(083111)	08/31/11	

HUNTER STEWART
ELECTRONIC VALIDATION REVIEW REPORT
SDG: MI01005
FST-39

ANALYTICAL DATA PACKAGE DOCUMENTATION

GENERAL INFORMATION

Items Reviewed	Reported		Performance Acceptable		Not Required
	No	Yes	No	Yes	
1. Sample results		X		X	
2. Parameters analyzed		X		X	
3. Methods of analysis		X		X	
4. Reporting limits of analysis		X		X	
5. Master tracking list		X		X	
6. Sample collection date		X		X	
7. Laboratory sample received date		X		X	
8. Sample preparation/extraction date		X		X	
9. Sample analysis date		X		X	
10. Copy of chain-of-custody form signed by lab sample custodian		X		X	
11. Narrative summary of QA or sample problems provided		X		X	
12. Laboratory Signature		X		X	
13. South Carolina Certification Number		X		X	

QA - quality assurance

The analytical report was complete with the following exceptions or notations.

Note: The laboratory reported values between the quantitative reporting limit and the method detection limit as estimated concentrations. The "J" qualifier was retained in this validation. Non-detect values are reported at the quantitative reporting limit.

HUNTER STEWART
ELECTRONIC VALIDATION REVIEW REPORT
SDG: MI01005
FST-39

VOLATILE ORGANIC COMPOUNDS

Items Reviewed	DQM Deficiency		Qualification Applied	
	No	Yes	No	Yes
1. Holding times/Preservation	DQM		DQM	
2. Reporting limits	M		M	
3. Blanks				
A. Method blanks	DQM		DQM	
B. Equipment blanks	NA		NA	
C. Trip blanks	DQM		DQM	
4. Surrogate spike recoveries	DQM		DQM	
5. Laboratory control sample (LCS) A. LCS %R	DQM		DQM	
B. LCS duplicate (LCSD) %R	DQM		DQM	
C. LCS/LCSD RPD	DQM		DQM	
6. Matrix spike (MS)				
A. MS %R	NA		NA	
B. MS duplicate (MSD) %R	NA		NA	
C. MS/MSD precision (RPD)	NA		NA	
7. Field Duplicate precision (RPD)	NA		NA	

M – Manual Review %R - percent recovery RPD - relative percent difference
DQM – Data Qualification Module

Comments:
This section presents a discussion of any additions or changes to the electronic data validation for compounds analyzed by Method 8260B.

No qualification required.

HUNTER STEWART
ELECTRONIC VALIDATION REVIEW REPORT
SDG: MJ27027
FST-39

Analytical data were evaluated in accordance with applicable USEPA SW-846 method requirements, "USEPA Contract Laboratory Program National Functional Guidelines for Organic Data Review" (October 1999), analytical method control criteria, the analytical laboratory Quality Assurance Control Limits, the Fort Stewart Military Reservation and Hunter Army Airfield Quality Assurance Project Plan (ARCADIS-2008), and professional judgment.

The data review summarized in this report includes a review of all sample collection documentation and the electronic data validation of the analytical data housed in the project database. Sample collection documentation included sample collection logs and chains of custody. The electronic data validation was performed utilizing the EQuIS Data Qualification Module (DQM). DQM checks for the following parameters:

- Holding times and preservation;
- Blank contamination;
    1. Method blanks,
    2. Trip blanks,
    3. Equipment blanks;
- Matrix spike and Duplicate sample recovery;
- Matrix Spike and Matrix Spike Duplicate relative percent differences;
- Laboratory Control Sample and Duplicate recovery;
- Laboratory Control Sample and Duplicate relative percent differences;
- Surrogate recovery (organic analyses only); and
- Field duplicate relative percent difference.

Manual review was performed for the following items:

- Sample dilutions and reporting limits;
- Case Narratives; and
- Laboratory Duplicates

Data was generated by Shealy Environmental Services, Inc. – West Columbia, South Carolina. Data qualifiers were applied electronically to the database with any additional qualifiers added manually. A summary of the data as amended by data qualifiers is included with the original hard copy reports.

The attached table summarizes the data that were qualified due to QC deficiencies. The table indicates compounds/analytes qualified based on electronic and manual validation. Refer to the associated method section of the validation checklist for a detailed explanation of qualification. All other data in these SDGs are considered usable as reported.

HUNTER STEWART
ELECTRONIC VALIDATION REVIEW REPORT
SDG: MJ27027
FST-39

The following list of data qualifiers and definitions were applied in accordance with qualification criteria defined in the greater than guidance documents:

UB Compound/analyte detected in blank or associated blank, qualified as a non-detect at listed value.

J The analyte was positively identified, but the associated numerical value is the approximate concentration of the analyte in the sample.

UJ The analyte was not detected greater than the reporting limit; however, the reported quantitation limit is approximate and may, or may not represent the actual limit of quantitation necessary to accurately and precisely measure analyte in the sample.

R The sample result is rejected due to serious deficiencies in the ability to analyze the sample and meet quality control criteria; and the presence or absence of the analyte cannot be verified.

U Not detected at the quantitative reporting limit

DQM RUN BY:	Rachelle Borne	10/31/11
REVIEW PERFORMED BY:	Rachelle Borne	10/31/11
SIGNATURE:	Rachelle Borne	10/31/11
PEER REVIEW:	Todd Church	11/3/11

HUNTER STEWART
ELECTRONIC VALIDATION REVIEW REPORT
SDG: MJ27027
FST-39

The following samples were included in this validation:

SDG	Sample ID	Sample Date	Parent Sample
MJ27027	G4MW058(10252011)	10/25/11	
MJ27027	Trip Blank	10/25/11	

HUNTER STEWART
ELECTRONIC VALIDATION REVIEW REPORT
SDG: MJ27027
FST-39

ANALYTICAL DATA PACKAGE DOCUMENTATION

GENERAL INFORMATION

Items Reviewed	Reported		Performance Acceptable		Not Required
	No	Yes	No	Yes	
1. Sample results		X		X	
2. Parameters analyzed		X		X	
3. Methods of analysis		X		X	
4. Reporting limits of analysis		X		X	
5. Master tracking list		X		X	
6. Sample collection date		X		X	
7. Laboratory sample received date		X		X	
8. Sample preparation/extraction date		X		X	
9. Sample analysis date		X		X	
10. Copy of chain-of-custody form signed by lab sample custodian		X		X	
11. Narrative summary of QA or sample problems provided		X		X	
12. Laboratory Signature		X		X	
13. South Carolina Certification Number		X		X	

QA - quality assurance

The analytical report was complete with the following exceptions or notations.

Note: The laboratory reported values between the quantitative reporting limit and the method detection limit as estimated concentrations. The "J" qualifier was retained in this validation. Non-detect values are reported at the quantitative reporting limit.

HUNTER STEWART
ELECTRONIC VALIDATION REVIEW REPORT
SDG: MJ27027
FST-39

VOLATILE ORGANIC COMPOUNDS

Items Reviewed	DQM Deficiency		Qualification Applied	
	No	Yes	No	Yes
1. Holding times/Preservation	DQM		DQM	
2. Reporting limits	M		M	
3. Blanks				
A. Method blanks		DQM		DQM
B. Equipment blanks	NA		NA	
C. Trip blanks	DQM		DQM	
4. Surrogate spike recoveries		DQM		DQM
5. Laboratory control sample (LCS) A. LCS %R	DQM		DQM	
B. LCS duplicate (LCSD) %R	NA		NA	
C. LCS/LCSD RPD	NA		NA	
6. Matrix spike (MS)				
A. MS %R	NA		NA	
B. MS duplicate (MSD) %R	NA		NA	
C. MS/MSD precision (RPD)	NA		NA	
7. Field Duplicate precision (RPD)	NA		NA	

M – Manual Review %R - percent recovery RPD - relative percent difference
DQM – Data Qualification Module

Comments:
This section presents a discussion of any additions or changes to the electronic data validation for compounds analyzed by Method 8260B.

3A. The compound carbon disulfide was detected in the method blank. The associated field sample was qualified as non-detect for carbon disulfide because the sample concentration was less than five times the blank value.

3C. The compounds carbon disulfide and chloromethane were detected in the trip blank. The associated field sample was non-detect for chloromethane; therefore, qualification of the data was not warranted. The associated field sample was qualified as non-detect for carbon disulfide because the sample concentration was less than five times the blank value.

Hunter Stewart
FST-39-10

SDG	Sample ID	Method	Analyte	Result	Units	Qualifier	Reason	Dilution
MJ27027	G4MW058 (10252011)	SW8260	Carbon disulfide	0.34	ug/l	UB	Blank Contamination	1

Report of Analysis

ARCADIS U.S., Inc.
30 Patewood Drive
Suite 155
Greenville, SC 29615
Attention: Chase Forman

Project Name: Hunter Stewart FST-39

Project Number: GP09HAFS.F39A.DG0FI

Lot Number: LD14020

Date Completed: 04/29/2010

Nisreen Saikaly
Project Manager

This report shall not be reproduced, except in its entirety, without the written approval of Shealy Environmental Services, Inc.

The following non-paginated documents are considered part of this report: Chain of Custody Record and Sample Receipt Checklist.

* L D 1 4 0 2 0 *

Case Narrative
ARCADIS U.S., Inc.
Lot Number: LD14020

This Report of Analysis contains the analytical result(s) for the sample(s) listed on the Sample Summary following this Case Narrative. The sample receiving date is documented in the header information associated with each sample.

Sample receipt, sample analysis, and data review have been performed in accordance with the most current approved NELAC standards, the Shealy Environmental Services, Inc. ("Shealy") Quality Assurance Management Plan (QAMP), standard operating procedures (SOPs), and Shealy policies. Any exceptions to the NELAC standards, the QAMP, SOPs or policies are qualified on the results page or discussed below.

If you have any questions regarding this report please contact the Shealy Project Manager listed on the cover page.

Semivolatile Organic Compounds

The surrogate recovery for Terphenyl-d14 was outside the acceptance limit in sample -004 and -006. Both samples were re-extracted yeilding the same surrogate failure. The surrogate recovery is attributed to matrix interference. The sample results are reported and no corrective action is required.

The surrogate recovery for sample -010 and -018 was outside the acceptance limit. The sample was re-extracted outside the holding time. Both analysis results are reported.

The MS/MSD recoveries in batches 31608 and 31690 were outside acceptance criteria. All other QA/QC criteria for the batch were within acceptance criteria and method control limits. The MS/MSD recovery results are attributed to matrix interference. The associated sample results were reported and no corrective action was required.

Volatile Organic Compounds

The MS/MSD recoveries in batch 31987 were outside acceptance criteria. All other QA/QC criteria for the batch were within acceptance criteria and method control limits. The MS/MSD recovery results are attributed to matrix interference. The associated sample results were reported and no corrective action was required.

Sample Summary

ARCADIS U.S., Inc.

Lot Number: LD14020

Sample Number	Sample ID	Matrix	Date Sampled	Date Received
001	F39TW09 (10-15)	Aqueous	04/12/2010 1130	04/14/2010
002	F39TW09 (40-45)	Aqueous	04/12/2010 1145	04/14/2010
003	F39TW09 (20-25)	Aqueous	04/12/2010 1330	04/14/2010
004	F39TW09 (30-35)	Aqueous	04/12/2010 1345	04/14/2010
005	F39TW10 (10-15)	Aqueous	04/13/2010 0845	04/14/2010
006	F39TW10 (40-45)	Aqueous	04/13/2010 0900	04/14/2010
007	F39TW10 (20-25)	Aqueous	04/13/2010 1115	04/14/2010
008	F39TW10 (30-35)	Aqueous	04/13/2010 1300	04/14/2010
009	Trip Blank	Aqueous	04/14/2010 0830	04/14/2010
010	F39TW11 (40-45)	Aqueous	04/14/2010 0815	04/15/2010
011	F39TW11 (10-15)	Aqueous	04/14/2010 0845	04/15/2010
012	F39TW11 (30-35)	Aqueous	04/14/2010 1015	04/15/2010
013	F39TW11 (20-25)	Aqueous	04/14/2010 1045	04/15/2010
014	Trip Blank	Aqueous	04/15/2010 0830	04/15/2010
015	F39TW12 (10-15)	Aqueous	04/14/2010 1700	04/17/2010
016	F39TW12 (20-25)	Aqueous	04/14/2010 1950	04/17/2010
017	F39TW12 (30-35)	Aqueous	04/14/2010 1845	04/17/2010
018	F39TW12 (40-45)	Aqueous	04/14/2010 1620	04/17/2010
019	TRIP BLANK	Aqueous	04/17/2010 0950	04/17/2010

(19 samples)

Executive Summary
ARCADIS U.S., Inc.
Lot Number: LD14020

Sample	Sample ID	Matrix	Parameter	Method	Result	Q	Units	Page
001	F39TW09 (10-15)	Aqueous	Acetone	8260B	3.3	J	ug/L	7
001	F39TW09 (10-15)	Aqueous	Benzene	8260B	0.12	J	ug/L	7
001	F39TW09 (10-15)	Aqueous	Carbon disulfide	8260B	0.28	J	ug/L	7
001	F39TW09 (10-15)	Aqueous	cis-1,2-Dichloroethene	8260B	0.28	J	ug/L	7
001	F39TW09 (10-15)	Aqueous	Methylene chloride	8260B	0.18	BJ	ug/L	7
001	F39TW09 (10-15)	Aqueous	Tetrachloroethene	8260B	1.9		ug/L	7
001	F39TW09 (10-15)	Aqueous	Trichloroethene	8260B	7.4		ug/L	8
002	F39TW09 (40-45)	Aqueous	Acetone	8260B	8.1	J	ug/L	11
002	F39TW09 (40-45)	Aqueous	Carbon disulfide	8260B	0.12	J	ug/L	11
002	F39TW09 (40-45)	Aqueous	Methylene chloride	8260B	0.24	BJ	ug/L	11
003	F39TW09 (20-25)	Aqueous	Acetone	8260B	3.9	J	ug/L	15
003	F39TW09 (20-25)	Aqueous	Benzene	8260B	0.18	J	ug/L	15
003	F39TW09 (20-25)	Aqueous	Carbon disulfide	8260B	0.56		ug/L	15
003	F39TW09 (20-25)	Aqueous	Chloromethane (Methyl chloride)	8260B	0.34	J	ug/L	15
003	F39TW09 (20-25)	Aqueous	cis-1,2-Dichloroethene	8260B	0.77		ug/L	15
003	F39TW09 (20-25)	Aqueous	Methylene chloride	8260B	0.21	BJ	ug/L	15
003	F39TW09 (20-25)	Aqueous	Tetrachloroethene	8260B	13		ug/L	15
003	F39TW09 (20-25)	Aqueous	Trichloroethene	8260B	14		ug/L	16
004	F39TW09 (30-35)	Aqueous	Acetone	8260B	7.5	BJ	ug/L	19
004	F39TW09 (30-35)	Aqueous	Benzene	8260B	0.22	J	ug/L	19
004	F39TW09 (30-35)	Aqueous	Carbon disulfide	8260B	0.37	J	ug/L	19
004	F39TW09 (30-35)	Aqueous	1,1-Dichloroethene	8260B	0.11	J	ug/L	19
004	F39TW09 (30-35)	Aqueous	cis-1,2-Dichloroethene	8260B	6.9		ug/L	19
004	F39TW09 (30-35)	Aqueous	Tetrachloroethene	8260B	5.4		ug/L	19
004	F39TW09 (30-35)	Aqueous	Trichloroethene	8260B	29		ug/L	20
005	F39TW10 (10-15)	Aqueous	Acetone	8260B	3.9	J	ug/L	23
005	F39TW10 (10-15)	Aqueous	Benzene	8260B	0.12	J	ug/L	23
005	F39TW10 (10-15)	Aqueous	Carbon disulfide	8260B	0.27	J	ug/L	23
005	F39TW10 (10-15)	Aqueous	cis-1,2-Dichloroethene	8260B	0.62		ug/L	23
005	F39TW10 (10-15)	Aqueous	Methylene chloride	8260B	0.20	BJ	ug/L	23
005	F39TW10 (10-15)	Aqueous	Tetrachloroethene	8260B	2.8		ug/L	23
005	F39TW10 (10-15)	Aqueous	Trichloroethene	8260B	12		ug/L	24
006	F39TW10 (40-45)	Aqueous	Acetone	8260B	6.2	J	ug/L	27
006	F39TW10 (40-45)	Aqueous	Benzene	8260B	0.17	J	ug/L	27
006	F39TW10 (40-45)	Aqueous	Methylene chloride	8260B	0.23	BJ	ug/L	27
006	F39TW10 (40-45)	Aqueous	Toluene	8260B	0.23	J	ug/L	27
007	F39TW10 (20-25)	Aqueous	Acetone	8260B	7.8	J	ug/L	33
007	F39TW10 (20-25)	Aqueous	Benzene	8260B	0.12	J	ug/L	33
007	F39TW10 (20-25)	Aqueous	Carbon disulfide	8260B	0.26	J	ug/L	33
007	F39TW10 (20-25)	Aqueous	cis-1,2-Dichloroethene	8260B	0.44	J	ug/L	33
007	F39TW10 (20-25)	Aqueous	Methylene chloride	8260B	0.23	BJ	ug/L	33
007	F39TW10 (20-25)	Aqueous	Tetrachloroethene	8260B	6.9		ug/L	33
007	F39TW10 (20-25)	Aqueous	Trichloroethene	8260B	7.7		ug/L	34
008	F39TW10 (30-35)	Aqueous	Acetone	8260B	8.0	J	ug/L	37
008	F39TW10 (30-35)	Aqueous	Benzene	8260B	0.14	J	ug/L	37

Sample	Sample ID	Matrix	Parameter	Method	Result	Q	Units	Page
008	F39TW10 (30-35)	Aqueous	Carbon disulfide	8260B	0.55		ug/L	37
008	F39TW10 (30-35)	Aqueous	cis-1,2-Dichloroethene	8260B	1.5		ug/L	37
008	F39TW10 (30-35)	Aqueous	Methylene chloride	8260B	0.20	BJ	ug/L	37
008	F39TW10 (30-35)	Aqueous	Tetrachloroethene	8260B	11		ug/L	37
008	F39TW10 (30-35)	Aqueous	Trichloroethene	8260B	15		ug/L	38
009	Trip Blank	Aqueous	Acetone	8260B	0.81	J	ug/L	41
009	Trip Blank	Aqueous	Methylene chloride	8260B	0.21	BJ	ug/L	41
010	F39TW11 (40-45)	Aqueous	Acetone	8260B	10		ug/L	43
010	F39TW11 (40-45)	Aqueous	Benzene	8260B	0.66		ug/L	43
010	F39TW11 (40-45)	Aqueous	2-Butanone (MEK)	8260B	49		ug/L	43
010	F39TW11 (40-45)	Aqueous	Carbon disulfide	8260B	0.40	J	ug/L	43
010	F39TW11 (40-45)	Aqueous	trans-1,2-Dichloroethene	8260B	1.7		ug/L	43
010	F39TW11 (40-45)	Aqueous	1,1-Dichloroethene	8260B	7.3		ug/L	43
010	F39TW11 (40-45)	Aqueous	cis-1,2-Dichloroethene	8260B	450		ug/L	43
010	F39TW11 (40-45)	Aqueous	Methylene chloride	8260B	0.20	BJ	ug/L	43
010	F39TW11 (40-45)	Aqueous	Tetrachloroethene	8260B	140		ug/L	43
010	F39TW11 (40-45)	Aqueous	Toluene	8260B	0.39	J	ug/L	43
010	F39TW11 (40-45)	Aqueous	Trichloroethene	8260B	1300		ug/L	44
010	F39TW11 (40-45)	Aqueous	Vinyl chloride	8260B	0.60		ug/L	44
011	F39TW11 (10-15)	Aqueous	Acetone	8260B	6.7	J	ug/L	49
011	F39TW11 (10-15)	Aqueous	Carbon disulfide	8260B	0.34	J	ug/L	49
011	F39TW11 (10-15)	Aqueous	Methylene chloride	8260B	0.22	BJ	ug/L	49
011	F39TW11 (10-15)	Aqueous	Trichloroethene	8260B	0.19	J	ug/L	50
012	F39TW11 (30-35)	Aqueous	Acetone	8260B	2.9	J	ug/L	53
012	F39TW11 (30-35)	Aqueous	Carbon disulfide	8260B	0.46	J	ug/L	53
012	F39TW11 (30-35)	Aqueous	Chloromethane (Methyl chloride)	8260B	0.26	J	ug/L	53
012	F39TW11 (30-35)	Aqueous	trans-1,2-Dichloroethene	8260B	4.1		ug/L	53
012	F39TW11 (30-35)	Aqueous	cis-1,2-Dichloroethene	8260B	14		ug/L	53
012	F39TW11 (30-35)	Aqueous	Methylene chloride	8260B	0.19	BJ	ug/L	53
012	F39TW11 (30-35)	Aqueous	Tetrachloroethene	8260B	0.69		ug/L	53
012	F39TW11 (30-35)	Aqueous	Trichloroethene	8260B	8.8		ug/L	54
013	F39TW11 (20-25)	Aqueous	Acetone	8260B	8.8	J	ug/L	57
013	F39TW11 (20-25)	Aqueous	Benzene	8260B	0.13	J	ug/L	57
013	F39TW11 (20-25)	Aqueous	Carbon disulfide	8260B	1.5		ug/L	57
013	F39TW11 (20-25)	Aqueous	Methylene chloride	8260B	0.20	BJ	ug/L	57
013	F39TW11 (20-25)	Aqueous	Toluene	8260B	0.17	J	ug/L	57
013	F39TW11 (20-25)	Aqueous	Trichloroethene	8260B	0.12	J	ug/L	58
013	F39TW11 (20-25)	Aqueous	Phenol	8270D	1.2		ug/L	60
014	Trip Blank	Aqueous	Acetone	8260B	1.2	J	ug/L	61
014	Trip Blank	Aqueous	Methylene chloride	8260B	0.22	BJ	ug/L	61
015	F39TW12 (10-15)	Aqueous	Acetone	8260B	3.6	BJ	ug/L	63
015	F39TW12 (10-15)	Aqueous	Benzene	8260B	0.19	J	ug/L	63
015	F39TW12 (10-15)	Aqueous	Carbon disulfide	8260B	0.24	J	ug/L	63
015	F39TW12 (10-15)	Aqueous	trans-1,2-Dichloroethene	8260B	0.86		ug/L	63
015	F39TW12 (10-15)	Aqueous	cis-1,2-Dichloroethene	8260B	3.1		ug/L	63
015	F39TW12 (10-15)	Aqueous	Tetrachloroethene	8260B	1.6		ug/L	63
015	F39TW12 (10-15)	Aqueous	Trichloroethene	8260B	13		ug/L	64
016	F39TW12 (20-25)	Aqueous	Acetone	8260B	4.8	BJ	ug/L	67

Executive Summary (Continued)

Lot Number: LD14020

Sample	Sample ID	Matrix	Parameter	Method	Result	Q	Units	Page
016	F39TW12 (20-25)	Aqueous	Benzene	8260B	0.57		ug/L	67
016	F39TW12 (20-25)	Aqueous	Carbon disulfide	8260B	0.45	J	ug/L	67
016	F39TW12 (20-25)	Aqueous	trans-1,2-Dichloroethene	8260B	0.50		ug/L	67
016	F39TW12 (20-25)	Aqueous	1,1-Dichloroethene	8260B	0.12	J	ug/L	67
016	F39TW12 (20-25)	Aqueous	cis-1,2-Dichloroethene	8260B	3.3		ug/L	67
016	F39TW12 (20-25)	Aqueous	Tetrachloroethene	8260B	20		ug/L	67
016	F39TW12 (20-25)	Aqueous	Trichloroethene	8260B	25		ug/L	68
017	F39TW12 (30-35)	Aqueous	Acetone	8260B	3.5	BJ	ug/L	71
017	F39TW12 (30-35)	Aqueous	Carbon disulfide	8260B	0.19	J	ug/L	71
017	F39TW12 (30-35)	Aqueous	cis-1,2-Dichloroethene	8260B	0.20	J	ug/L	71
017	F39TW12 (30-35)	Aqueous	Trichloroethene	8260B	0.10	J	ug/L	72
018	F39TW12 (40-45)	Aqueous	Acetone	8260B	7.2	BJ	ug/L	75
018	F39TW12 (40-45)	Aqueous	Carbon disulfide	8260B	0.19	J	ug/L	75
019	TRIP BLANK	Aqueous	Acetone	8260B	1.2	BJ	ug/L	81
019	TRIP BLANK	Aqueous	Carbon disulfide	8260B	0.38	J	ug/L	81
019	TRIP BLANK	Aqueous	Vinyl chloride	8260B	0.16	J	ug/L	82

(109 detections)

Volatile Organic Compounds by GC/MS

Client: ARCADIS U.S., Inc.
Laboratory ID: LD14020-001
Description: F39TW09 (10-15)
Matrix: Aqueous
Date Sampled: 04/12/2010 1130
Date Received: 04/14/2010

Run	Prep Method	Analytical Method	Dilution	Analysis Date	Analyst	Prep Date	Batch
1	5030B	8260B	1	04/17/2010 0217	LBS		31703

Parameter	CAS Number	Analytical Method	Result	Q	PQL	MDL	Units	Run
Acetone	67-64-1	8260B	3.3	J	10	0.061	ug/L	1
Benzene	71-43-2	8260B	0.12	J	0.50	0.027	ug/L	1
Bromodichloromethane	75-27-4	8260B	ND		0.50	0.17	ug/L	1
Bromoform	75-25-2	8260B	ND		0.50	0.010	ug/L	1
Bromomethane (Methyl bromide)	74-83-9	8260B	ND		0.50	0.20	ug/L	1
2-Butanone (MEK)	78-93-3	8260B	ND		10	2.0	ug/L	1
Carbon disulfide	75-15-0	8260B	0.28	J	0.50	0.097	ug/L	1
Carbon tetrachloride	56-23-5	8260B	ND		0.50	0.085	ug/L	1
Chlorobenzene	108-90-7	8260B	ND		0.50	0.17	ug/L	1
Chloroethane	75-00-3	8260B	ND		0.50	0.17	ug/L	1
Chloroform	67-66-3	8260B	ND		0.50	0.17	ug/L	1
Chloromethane (Methyl chloride)	74-87-3	8260B	ND		0.50	0.17	ug/L	1
Cyclohexane	110-82-7	8260B	ND		0.50	0.30	ug/L	1
1,2-Dibromo-3-chloropropane (DBCP)	96-12-8	8260B	ND		0.50	0.069	ug/L	1
Dibromochloromethane	124-48-1	8260B	ND		0.50	0.17	ug/L	1
1,2-Dibromoethane (EDB)	106-93-4	8260B	ND		0.50	0.061	ug/L	1
1,3-Dichlorobenzene	541-73-1	8260B	ND		0.50	0.17	ug/L	1
1,2-Dichlorobenzene	95-50-1	8260B	ND		0.50	0.17	ug/L	1
1,4-Dichlorobenzene	106-46-7	8260B	ND		0.50	0.17	ug/L	1
Dichlorodifluoromethane	75-71-8	8260B	ND		0.50	0.071	ug/L	1
1,1-Dichloroethane	75-34-3	8260B	ND		0.50	0.054	ug/L	1
1,2-Dichloroethane	107-06-2	8260B	ND		0.50	0.023	ug/L	1
trans-1,2-Dichloroethene	156-60-5	8260B	ND		0.50	0.079	ug/L	1
1,1-Dichloroethene	75-35-4	8260B	ND		0.50	0.094	ug/L	1
cis-1,2-Dichloroethene	156-59-2	8260B	0.28	J	0.50	0.087	ug/L	1
1,2-Dichloropropane	78-87-5	8260B	ND		0.50	0.081	ug/L	1
trans-1,3-Dichloropropene	10061-02-6	8260B	ND		0.50	0.18	ug/L	1
cis-1,3-Dichloropropene	10061-01-5	8260B	ND		0.50	0.090	ug/L	1
Ethylbenzene	100-41-4	8260B	ND		0.50	0.17	ug/L	1
2-Hexanone	591-78-6	8260B	ND		10	0.27	ug/L	1
Isopropylbenzene	98-82-8	8260B	ND		0.50	0.029	ug/L	1
Methyl acetate	79-20-9	8260B	ND		1.0	0.30	ug/L	1
Methyl tertiary butyl ether (MTBE)	1634-04-4	8260B	ND		0.50	0.019	ug/L	1
4-Methyl-2-pentanone	108-10-1	8260B	ND		10	0.31	ug/L	1
Methylcyclohexane	108-87-2	8260B	ND		5.0	0.95	ug/L	1
Methylene chloride	75-09-2	8260B	0.18	BJ	0.50	0.17	ug/L	1
Styrene	100-42-5	8260B	ND		0.50	0.015	ug/L	1
1,1,2,2-Tetrachloroethane	79-34-5	8260B	ND		0.50	0.013	ug/L	1
Tetrachloroethene	127-18-4	8260B	1.9		0.50	0.014	ug/L	1
Toluene	108-88-3	8260B	ND		0.50	0.17	ug/L	1
1,1,2-Trichloro-1,2,2-Trifluoroethane	76-13-1	8260B	ND		0.50	0.30	ug/L	1
1,2,4-Trichlorobenzene	120-82-1	8260B	ND		0.50	0.17	ug/L	1
1,1,1-Trichloroethane	71-55-6	8260B	ND		0.50	0.029	ug/L	1
1,1,2-Trichloroethane	79-00-5	8260B	ND		0.50	0.031	ug/L	1

PQL = Practical quantitation limit
B = Detected in the method blank
E = Quantitation of compound exceeded the calibration range
ND = Not detected at or above the MDL
J = Estimated result < PQL and ≥ MDL
P = The RPD between two GC columns exceeds 40%
Where applicable, all soil sample analysis are reported on a dry weight basis unless flagged with a "W"
N = Recovery is out of criteria
H = Out of holding time

Volatile Organic Compounds by GC/MS

Client: ARCADIS U.S., Inc.
Laboratory ID: LD14020-001
Description: F39TW09 (10-15)
Matrix: Aqueous
Date Sampled: 04/12/2010 1130
Date Received: 04/14/2010

Run	Prep Method	Analytical Method	Dilution	Analysis Date	Analyst	Prep Date	Batch
1	5030B	8260B	1	04/17/2010 0217	LBS		31703

Parameter	CAS Number	Analytical Method	Result	Q	PQL	MDL	Units	Run
Trichloroethene	79-01-6	8260B	7.4		0.50	0.024	ug/L	1
Trichlorofluoromethane	75-69-4	8260B	ND		0.50	0.051	ug/L	1
Vinyl chloride	75-01-4	8260B	ND		0.50	0.065	ug/L	1
Xylenes (total)	1330-20-7	8260B	ND		0.50	0.17	ug/L	1

Surrogate	Q	Run 1 % Recovery	Acceptance Limits
1,2-Dichloroethane-d4		102	70-130
Bromofluorobenzene		92	70-130
Toluene-d8		109	70-130

PQL = Practical quantitation limit
B = Detected in the method blank
E = Quantitation of compound exceeded the calibration range
ND = Not detected at or above the MDL
J = Estimated result < PQL and ≥ MDL
P = The RPD between two GC columns exceeds 40%
Where applicable, all soil sample analysis are reported on a dry weight basis unless flagged with a "W"
N = Recovery is out of criteria
H = Out of holding time

Semivolatile Organic Compounds by GC/MS

Client: ARCADIS U.S., Inc.
Laboratory ID: LD14020-001
Description: F39TW09 (10-15)
Matrix: Aqueous
Date Sampled: 04/12/2010 1130
Date Received: 04/14/2010

Run	Prep Method	Analytical Method	Dilution	Analysis Date	Analyst	Prep Date	Batch
1	3520C	8270D	1	04/21/2010 2036	WD	04/15/2010 0015	31608

Parameter	CAS Number	Analytical Method	Result	Q	PQL	MDL	Units	Run
Acenaphthene	83-32-9	8270D	ND		1.0	0.092	ug/L	1
Acenaphthylene	208-96-8	8270D	ND		1.0	0.16	ug/L	1
Acetophenone	98-86-2	8270D	ND		1.0	0.33	ug/L	1
Anthracene	120-12-7	8270D	ND		1.0	0.13	ug/L	1
Atrazine	1912-24-9	8270D	ND		1.0	0.20	ug/L	1
Benzaldehyde	100-52-7	8270D	ND		5.1	1.0	ug/L	1
Benzo(a)anthracene	56-55-3	8270D	ND		1.0	0.15	ug/L	1
Benzo(a)pyrene	50-32-8	8270D	ND		1.0	0.16	ug/L	1
Benzo(b)fluoranthene	205-99-2	8270D	ND		1.0	0.20	ug/L	1
Benzo(g,h,i)perylene	191-24-2	8270D	ND		1.0	0.23	ug/L	1
Benzo(k)fluoranthene	207-08-9	8270D	ND		1.0	0.12	ug/L	1
1,1'-Biphenyl	92-52-4	8270D	ND		1.0	0.20	ug/L	1
4-Bromophenyl phenyl ether	101-55-3	8270D	ND		1.0	0.12	ug/L	1
Butyl benzyl phthalate	85-68-7	8270D	ND		5.1	1.7	ug/L	1
Caprolactam	105-60-2	8270D	ND		5.1	1.2	ug/L	1
Carbazole	86-74-8	8270D	ND		1.0	0.26	ug/L	1
4-Chloro-3-methyl phenol	59-50-7	8270D	ND		1.0	0.22	ug/L	1
4-Chloroaniline	106-47-8	8270D	ND		1.0	0.13	ug/L	1
bis(2-Chloroethoxy)methane	111-91-1	8270D	ND		1.0	0.13	ug/L	1
bis(2-Chloroethyl)ether	111-44-4	8270D	ND		1.0	0.13	ug/L	1
bis(2-Chloroisopropyl)ether	108-60-1	8270D	ND		1.0	0.082	ug/L	1
2-Chloronaphthalene	91-58-7	8270D	ND		1.0	0.12	ug/L	1
2-Chlorophenol	95-57-8	8270D	ND		1.0	0.13	ug/L	1
4-Chlorophenyl phenyl ether	7005-72-3	8270D	ND		1.0	0.11	ug/L	1
Chrysene	218-01-9	8270D	ND		1.0	0.12	ug/L	1
Dibenzo(a,h)anthracene	53-70-3	8270D	ND		1.0	0.13	ug/L	1
Dibenzofuran	132-64-9	8270D	ND		1.0	0.16	ug/L	1
3,3'-Dichlorobenzidine	91-94-1	8270D	ND		5.1	0.83	ug/L	1
2,4-Dichlorophenol	120-83-2	8270D	ND		1.0	0.15	ug/L	1
Diethylphthalate	84-66-2	8270D	ND		5.1	1.7	ug/L	1
Dimethyl phthalate	131-11-3	8270D	ND		5.1	1.7	ug/L	1
2,4-Dimethylphenol	105-67-9	8270D	ND		1.0	0.32	ug/L	1
Di-n-butyl phthalate	84-74-2	8270D	ND		5.1	1.7	ug/L	1
4,6-Dinitro-2-methylphenol	534-52-1	8270D	ND		5.1	1.5	ug/L	1
2,4-Dinitrophenol	51-28-5	8270D	ND		5.1	0.26	ug/L	1
2,4-Dinitrotoluene	121-14-2	8270D	ND		2.0	0.46	ug/L	1
2,6-Dinitrotoluene	606-20-2	8270D	ND		2.0	0.41	ug/L	1
Di-n-octylphthalate	117-84-0	8270D	ND		5.1	1.7	ug/L	1
bis(2-Ethylhexyl)phthalate	117-81-7	8270D	ND		5.1	1.7	ug/L	1
Fluoranthene	206-44-0	8270D	ND		1.0	0.21	ug/L	1
Fluorene	86-73-7	8270D	ND		1.0	0.10	ug/L	1
Hexachlorobenzene	118-74-1	8270D	ND		1.0	0.21	ug/L	1
Hexachlorobutadiene	87-68-3	8270D	ND		1.0	0.092	ug/L	1
Hexachlorocyclopentadiene	77-47-4	8270D	ND		5.1	0.23	ug/L	1

PQL = Practical quantitation limit
B = Detected in the method blank
E = Quantitation of compound exceeded the calibration range
ND = Not detected at or above the MDL
J = Estimated result < PQL and ≥ MDL
P = The RPD between two GC columns exceeds 40%
Where applicable, all soil sample analysis are reported on a dry weight basis unless flagged with a "W"
N = Recovery is out of criteria
H = Out of holding time

Semivolatile Organic Compounds by GC/MS

Client: ARCADIS U.S., Inc.
Laboratory ID: LD14020-001
Description: F39TW09 (10-15)
Matrix: Aqueous
Date Sampled: 04/12/2010 1130
Date Received: 04/14/2010

Run	Prep Method	Analytical Method	Dilution	Analysis Date	Analyst	Prep Date	Batch
1	3520C	8270D	1	04/21/2010 2036	WD	04/15/2010 0015	31608

Parameter	CAS Number	Analytical Method	Result	Q	PQL	MDL	Units	Run
Hexachloroethane	67-72-1	8270D	ND		1.0	0.11	ug/L	1
Indeno(1,2,3-c,d)pyrene	193-39-5	8270D	ND		1.0	0.23	ug/L	1
Isophorone	78-59-1	8270D	ND		1.0	0.082	ug/L	1
2-Methylnaphthalene	91-57-6	8270D	ND		1.0	0.082	ug/L	1
2-Methylphenol	95-48-7	8270D	ND		1.0	0.17	ug/L	1
3 & 4-Methylphenol	106-44-5	8270D	ND		2.0	0.58	ug/L	1
Naphthalene	91-20-3	8270D	ND		1.0	0.071	ug/L	1
2-Nitroaniline	88-74-4	8270D	ND		2.0	0.56	ug/L	1
3-Nitroaniline	99-09-2	8270D	ND		2.0	0.79	ug/L	1
4-Nitroaniline	100-01-6	8270D	ND		2.0	0.40	ug/L	1
Nitrobenzene	98-95-3	8270D	ND		1.0	0.10	ug/L	1
2-Nitrophenol	88-75-5	8270D	ND		2.0	0.28	ug/L	1
4-Nitrophenol	100-02-7	8270D	ND		5.1	0.65	ug/L	1
N-Nitrosodi-n-propylamine	621-64-7	8270D	ND		1.0	0.082	ug/L	1
N-Nitrosodiphenylamine (Diphenylamine)	86-30-6	8270D	ND		1.0	0.39	ug/L	1
Pentachlorophenol	87-86-5	8270D	ND		5.1	0.55	ug/L	1
Phenanthrene	85-01-8	8270D	ND		1.0	0.18	ug/L	1
Phenol	108-95-2	8270D	ND		1.0	0.11	ug/L	1
Pyrene	129-00-0	8270D	ND		1.0	0.16	ug/L	1
2,4,5-Trichlorophenol	95-95-4	8270D	ND		1.0	0.18	ug/L	1
2,4,6-Trichlorophenol	88-06-2	8270D	ND		1.0	0.22	ug/L	1

Surrogate	Q	Run 1 % Recovery	Acceptance Limits
2-Fluorobiphenyl		90	37-129
2-Fluorophenol		78	24-127
Nitrobenzene-d5		87	38-127
Phenol-d5		88	28-128
Terphenyl-d14		35	10-148
2,4,6-Tribromophenol		92	41-144

PQL = Practical quantitation limit
B = Detected in the method blank
E = Quantitation of compound exceeded the calibration range
ND = Not detected at or above the MDL
J = Estimated result < PQL and ≥ MDL
P = The RPD between two GC columns exceeds 40%
Where applicable, all soil sample analysis are reported on a dry weight basis unless flagged with a "W"
N = Recovery is out of criteria
H = Out of holding time

Volatile Organic Compounds by GC/MS

Client: ARCADIS U.S., Inc.
Laboratory ID: LD14020-002
Description: F39TW09 (40-45)
Matrix: Aqueous
Date Sampled: 04/12/2010 1145
Date Received: 04/14/2010

Run	Prep Method	Analytical Method	Dilution	Analysis Date	Analyst	Prep Date	Batch
1	5030B	8260B	1	04/17/2010 0238	LBS		31703

Parameter	CAS Number	Analytical Method	Result	Q	PQL	MDL	Units	Run
Acetone	67-64-1	8260B	8.1	J	10	0.061	ug/L	1
Benzene	71-43-2	8260B	ND		0.50	0.027	ug/L	1
Bromodichloromethane	75-27-4	8260B	ND		0.50	0.17	ug/L	1
Bromoform	75-25-2	8260B	ND		0.50	0.010	ug/L	1
Bromomethane (Methyl bromide)	74-83-9	8260B	ND		0.50	0.20	ug/L	1
2-Butanone (MEK)	78-93-3	8260B	ND		10	2.0	ug/L	1
Carbon disulfide	75-15-0	8260B	0.12	J	0.50	0.097	ug/L	1
Carbon tetrachloride	56-23-5	8260B	ND		0.50	0.085	ug/L	1
Chlorobenzene	108-90-7	8260B	ND		0.50	0.17	ug/L	1
Chloroethane	75-00-3	8260B	ND		0.50	0.17	ug/L	1
Chloroform	67-66-3	8260B	ND		0.50	0.17	ug/L	1
Chloromethane (Methyl chloride)	74-87-3	8260B	ND		0.50	0.17	ug/L	1
Cyclohexane	110-82-7	8260B	ND		0.50	0.30	ug/L	1
1,2-Dibromo-3-chloropropane (DBCP)	96-12-8	8260B	ND		0.50	0.069	ug/L	1
Dibromochloromethane	124-48-1	8260B	ND		0.50	0.17	ug/L	1
1,2-Dibromoethane (EDB)	106-93-4	8260B	ND		0.50	0.061	ug/L	1
1,3-Dichlorobenzene	541-73-1	8260B	ND		0.50	0.17	ug/L	1
1,2-Dichlorobenzene	95-50-1	8260B	ND		0.50	0.17	ug/L	1
1,4-Dichlorobenzene	106-46-7	8260B	ND		0.50	0.17	ug/L	1
Dichlorodifluoromethane	75-71-8	8260B	ND		0.50	0.071	ug/L	1
1,1-Dichloroethane	75-34-3	8260B	ND		0.50	0.054	ug/L	1
1,2-Dichloroethane	107-06-2	8260B	ND		0.50	0.023	ug/L	1
trans-1,2-Dichloroethene	156-60-5	8260B	ND		0.50	0.079	ug/L	1
1,1-Dichloroethene	75-35-4	8260B	ND		0.50	0.094	ug/L	1
cis-1,2-Dichloroethene	156-59-2	8260B	ND		0.50	0.087	ug/L	1
1,2-Dichloropropane	78-87-5	8260B	ND		0.50	0.081	ug/L	1
trans-1,3-Dichloropropene	10061-02-6	8260B	ND		0.50	0.18	ug/L	1
cis-1,3-Dichloropropene	10061-01-5	8260B	ND		0.50	0.090	ug/L	1
Ethylbenzene	100-41-4	8260B	ND		0.50	0.17	ug/L	1
2-Hexanone	591-78-6	8260B	ND		10	0.27	ug/L	1
Isopropylbenzene	98-82-8	8260B	ND		0.50	0.029	ug/L	1
Methyl acetate	79-20-9	8260B	ND		1.0	0.30	ug/L	1
Methyl tertiary butyl ether (MTBE)	1634-04-4	8260B	ND		0.50	0.019	ug/L	1
4-Methyl-2-pentanone	108-10-1	8260B	ND		10	0.31	ug/L	1
Methylcyclohexane	108-87-2	8260B	ND		5.0	0.95	ug/L	1
Methylene chloride	75-09-2	8260B	0.24	BJ	0.50	0.17	ug/L	1
Styrene	100-42-5	8260B	ND		0.50	0.015	ug/L	1
1,1,2,2-Tetrachloroethane	79-34-5	8260B	ND		0.50	0.013	ug/L	1
Tetrachloroethene	127-18-4	8260B	ND		0.50	0.014	ug/L	1
Toluene	108-88-3	8260B	ND		0.50	0.17	ug/L	1
1,1,2-Trichloro-1,2,2-Trifluoroethane	76-13-1	8260B	ND		0.50	0.30	ug/L	1
1,2,4-Trichlorobenzene	120-82-1	8260B	ND		0.50	0.17	ug/L	1
1,1,1-Trichloroethane	71-55-6	8260B	ND		0.50	0.029	ug/L	1
1,1,2-Trichloroethane	79-00-5	8260B	ND		0.50	0.031	ug/L	1

PQL = Practical quantitation limit
B = Detected in the method blank
E = Quantitation of compound exceeded the calibration range
ND = Not detected at or above the MDL
J = Estimated result < PQL and ≥ MDL
P = The RPD between two GC columns exceeds 40%
Where applicable, all soil sample analysis are reported on a dry weight basis unless flagged with a "W"
N = Recovery is out of criteria
H = Out of holding time

Volatile Organic Compounds by GC/MS

Client: ARCADIS U.S., Inc.
Laboratory ID: LD14020-002
Description: F39TW09 (40-45)
Matrix: Aqueous
Date Sampled: 04/12/2010 1145
Date Received: 04/14/2010

Run	Prep Method	Analytical Method	Dilution	Analysis Date	Analyst	Prep Date	Batch
1	5030B	8260B	1	04/17/2010 0238	LBS		31703

Parameter	CAS Number	Analytical Method	Result	Q	PQL	MDL	Units	Run
Trichloroethene	79-01-6	8260B	ND		0.50	0.024	ug/L	1
Trichlorofluoromethane	75-69-4	8260B	ND		0.50	0.051	ug/L	1
Vinyl chloride	75-01-4	8260B	ND		0.50	0.065	ug/L	1
Xylenes (total)	1330-20-7	8260B	ND		0.50	0.17	ug/L	1

Surrogate	Q	Run 1 % Recovery	Acceptance Limits
1,2-Dichloroethane-d4		102	70-130
Bromofluorobenzene		93	70-130
Toluene-d8		109	70-130

PQL = Practical quantitation limit
B = Detected in the method blank
E = Quantitation of compound exceeded the calibration range
ND = Not detected at or above the MDL
J = Estimated result < PQL and ≥ MDL
P = The RPD between two GC columns exceeds 40%
Where applicable, all soil sample analysis are reported on a dry weight basis unless flagged with a "W"
N = Recovery is out of criteria
H = Out of holding time

Semivolatile Organic Compounds by GC/MS

Client: ARCADIS U.S., Inc.
Laboratory ID: LD14020-002
Description: F39TW09 (40-45)
Matrix: Aqueous
Date Sampled: 04/12/2010 1145
Date Received: 04/14/2010

Run	Prep Method	Analytical Method	Dilution	Analysis Date	Analyst	Prep Date	Batch
1	3520C	8270D	1	04/21/2010 2056	WD	04/15/2010 0015	31608

Parameter	CAS Number	Analytical Method	Result	Q	PQL	MDL	Units	Run
Acenaphthene	83-32-9	8270D	ND		1.0	0.092	ug/L	1
Acenaphthylene	208-96-8	8270D	ND		1.0	0.16	ug/L	1
Acetophenone	98-86-2	8270D	ND		1.0	0.33	ug/L	1
Anthracene	120-12-7	8270D	ND		1.0	0.13	ug/L	1
Atrazine	1912-24-9	8270D	ND		1.0	0.20	ug/L	1
Benzaldehyde	100-52-7	8270D	ND		5.1	1.0	ug/L	1
Benzo(a)anthracene	56-55-3	8270D	ND		1.0	0.15	ug/L	1
Benzo(a)pyrene	50-32-8	8270D	ND		1.0	0.16	ug/L	1
Benzo(b)fluoranthene	205-99-2	8270D	ND		1.0	0.20	ug/L	1
Benzo(g,h,i)perylene	191-24-2	8270D	ND		1.0	0.23	ug/L	1
Benzo(k)fluoranthene	207-08-9	8270D	ND		1.0	0.12	ug/L	1
1,1'-Biphenyl	92-52-4	8270D	ND		1.0	0.20	ug/L	1
4-Bromophenyl phenyl ether	101-55-3	8270D	ND		1.0	0.12	ug/L	1
Butyl benzyl phthalate	85-68-7	8270D	ND		5.1	1.7	ug/L	1
Caprolactam	105-60-2	8270D	ND		5.1	1.2	ug/L	1
Carbazole	86-74-8	8270D	ND		1.0	0.26	ug/L	1
4-Chloro-3-methyl phenol	59-50-7	8270D	ND		1.0	0.22	ug/L	1
4-Chloroaniline	106-47-8	8270D	ND		1.0	0.13	ug/L	1
bis(2-Chloroethoxy)methane	111-91-1	8270D	ND		1.0	0.13	ug/L	1
bis(2-Chloroethyl)ether	111-44-4	8270D	ND		1.0	0.13	ug/L	1
bis(2-Chloroisopropyl)ether	108-60-1	8270D	ND		1.0	0.082	ug/L	1
2-Chloronaphthalene	91-58-7	8270D	ND		1.0	0.12	ug/L	1
2-Chlorophenol	95-57-8	8270D	ND		1.0	0.13	ug/L	1
4-Chlorophenyl phenyl ether	7005-72-3	8270D	ND		1.0	0.11	ug/L	1
Chrysene	218-01-9	8270D	ND		1.0	0.12	ug/L	1
Dibenzo(a,h)anthracene	53-70-3	8270D	ND		1.0	0.13	ug/L	1
Dibenzofuran	132-64-9	8270D	ND		1.0	0.16	ug/L	1
3,3'-Dichlorobenzidine	91-94-1	8270D	ND		5.1	0.83	ug/L	1
2,4-Dichlorophenol	120-83-2	8270D	ND		1.0	0.15	ug/L	1
Diethylphthalate	84-66-2	8270D	ND		5.1	1.7	ug/L	1
Dimethyl phthalate	131-11-3	8270D	ND		5.1	1.7	ug/L	1
2,4-Dimethylphenol	105-67-9	8270D	ND		1.0	0.32	ug/L	1
Di-n-butyl phthalate	84-74-2	8270D	ND		5.1	1.7	ug/L	1
4,6-Dinitro-2-methylphenol	534-52-1	8270D	ND		5.1	1.5	ug/L	1
2,4-Dinitrophenol	51-28-5	8270D	ND		5.1	0.26	ug/L	1
2,4-Dinitrotoluene	121-14-2	8270D	ND		2.0	0.46	ug/L	1
2,6-Dinitrotoluene	606-20-2	8270D	ND		2.0	0.41	ug/L	1
Di-n-octylphthalate	117-84-0	8270D	ND		5.1	1.7	ug/L	1
bis(2-Ethylhexyl)phthalate	117-81-7	8270D	ND		5.1	1.7	ug/L	1
Fluoranthene	206-44-0	8270D	ND		1.0	0.21	ug/L	1
Fluorene	86-73-7	8270D	ND		1.0	0.10	ug/L	1
Hexachlorobenzene	118-74-1	8270D	ND		1.0	0.21	ug/L	1
Hexachlorobutadiene	87-68-3	8270D	ND		1.0	0.092	ug/L	1
Hexachlorocyclopentadiene	77-47-4	8270D	ND		5.1	0.23	ug/L	1

PQL = Practical quantitation limit
B = Detected in the method blank
E = Quantitation of compound exceeded the calibration range
ND = Not detected at or above the MDL
J = Estimated result < PQL and ≥ MDL
P = The RPD between two GC columns exceeds 40%
Where applicable, all soil sample analysis are reported on a dry weight basis unless flagged with a "W"
N = Recovery is out of criteria
H = Out of holding time

Semivolatile Organic Compounds by GC/MS

Client: ARCADIS U.S., Inc.
Laboratory ID: LD14020-002
Description: F39TW09 (40-45)
Matrix: Aqueous
Date Sampled: 04/12/2010 1145
Date Received: 04/14/2010

Run	Prep Method	Analytical Method	Dilution	Analysis Date	Analyst	Prep Date	Batch
1	3520C	8270D	1	04/21/2010 2056	WD	04/15/2010 0015	31608

Parameter	CAS Number	Analytical Method	Result	Q	PQL	MDL	Units	Run
Hexachloroethane	67-72-1	8270D	ND		1.0	0.11	ug/L	1
Indeno(1,2,3-c,d)pyrene	193-39-5	8270D	ND		1.0	0.23	ug/L	1
Isophorone	78-59-1	8270D	ND		1.0	0.082	ug/L	1
2-Methylnaphthalene	91-57-6	8270D	ND		1.0	0.082	ug/L	1
2-Methylphenol	95-48-7	8270D	ND		1.0	0.17	ug/L	1
3 & 4-Methylphenol	106-44-5	8270D	ND		2.0	0.58	ug/L	1
Naphthalene	91-20-3	8270D	ND		1.0	0.071	ug/L	1
2-Nitroaniline	88-74-4	8270D	ND		2.0	0.56	ug/L	1
3-Nitroaniline	99-09-2	8270D	ND		2.0	0.79	ug/L	1
4-Nitroaniline	100-01-6	8270D	ND		2.0	0.40	ug/L	1
Nitrobenzene	98-95-3	8270D	ND		1.0	0.10	ug/L	1
2-Nitrophenol	88-75-5	8270D	ND		2.0	0.28	ug/L	1
4-Nitrophenol	100-02-7	8270D	ND		5.1	0.65	ug/L	1
N-Nitrosodi-n-propylamine	621-64-7	8270D	ND		1.0	0.082	ug/L	1
N-Nitrosodiphenylamine (Diphenylamine)	86-30-6	8270D	ND		1.0	0.39	ug/L	1
Pentachlorophenol	87-86-5	8270D	ND		5.1	0.55	ug/L	1
Phenanthrene	85-01-8	8270D	ND		1.0	0.18	ug/L	1
Phenol	108-95-2	8270D	ND		1.0	0.11	ug/L	1
Pyrene	129-00-0	8270D	ND		1.0	0.16	ug/L	1
2,4,5-Trichlorophenol	95-95-4	8270D	ND		1.0	0.18	ug/L	1
2,4,6-Trichlorophenol	88-06-2	8270D	ND		1.0	0.22	ug/L	1

Surrogate	Q	Run 1 % Recovery	Acceptance Limits
2-Fluorobiphenyl		78	37-129
2-Fluorophenol		67	24-127
Nitrobenzene-d5		70	38-127
Phenol-d5		75	28-128
Terphenyl-d14		32	10-148
2,4,6-Tribromophenol		80	41-144

PQL = Practical quantitation limit
B = Detected in the method blank
E = Quantitation of compound exceeded the calibration range
ND = Not detected at or above the MDL
J = Estimated result < PQL and ≥ MDL
P = The RPD between two GC columns exceeds 40%
Where applicable, all soil sample analysis are reported on a dry weight basis unless flagged with a "W"
N = Recovery is out of criteria
H = Out of holding time

Volatile Organic Compounds by GC/MS

Client: ARCADIS U.S., Inc.
Laboratory ID: LD14020-003
Description: F39TW09 (20-25)
Matrix: Aqueous
Date Sampled: 04/12/2010 1330
Date Received: 04/14/2010

Run	Prep Method	Analytical Method	Dilution	Analysis Date	Analyst	Prep Date	Batch
1	5030B	8260B	1	04/17/2010 0300	LBS		31703

Parameter	CAS Number	Analytical Method	Result	Q	PQL	MDL	Units	Run
Acetone	67-64-1	8260B	3.9	J	10	0.061	ug/L	1
Benzene	71-43-2	8260B	0.18	J	0.50	0.027	ug/L	1
Bromodichloromethane	75-27-4	8260B	ND		0.50	0.17	ug/L	1
Bromoform	75-25-2	8260B	ND		0.50	0.010	ug/L	1
Bromomethane (Methyl bromide)	74-83-9	8260B	ND		0.50	0.20	ug/L	1
2-Butanone (MEK)	78-93-3	8260B	ND		10	2.0	ug/L	1
Carbon disulfide	75-15-0	8260B	0.56		0.50	0.097	ug/L	1
Carbon tetrachloride	56-23-5	8260B	ND		0.50	0.085	ug/L	1
Chlorobenzene	108-90-7	8260B	ND		0.50	0.17	ug/L	1
Chloroethane	75-00-3	8260B	ND		0.50	0.17	ug/L	1
Chloroform	67-66-3	8260B	ND		0.50	0.17	ug/L	1
Chloromethane (Methyl chloride)	74-87-3	8260B	0.34	J	0.50	0.17	ug/L	1
Cyclohexane	110-82-7	8260B	ND		0.50	0.30	ug/L	1
1,2-Dibromo-3-chloropropane (DBCP)	96-12-8	8260B	ND		0.50	0.069	ug/L	1
Dibromochloromethane	124-48-1	8260B	ND		0.50	0.17	ug/L	1
1,2-Dibromoethane (EDB)	106-93-4	8260B	ND		0.50	0.061	ug/L	1
1,3-Dichlorobenzene	541-73-1	8260B	ND		0.50	0.17	ug/L	1
1,2-Dichlorobenzene	95-50-1	8260B	ND		0.50	0.17	ug/L	1
1,4-Dichlorobenzene	106-46-7	8260B	ND		0.50	0.17	ug/L	1
Dichlorodifluoromethane	75-71-8	8260B	ND		0.50	0.071	ug/L	1
1,1-Dichloroethane	75-34-3	8260B	ND		0.50	0.054	ug/L	1
1,2-Dichloroethane	107-06-2	8260B	ND		0.50	0.023	ug/L	1
trans-1,2-Dichloroethene	156-60-5	8260B	ND		0.50	0.079	ug/L	1
1,1-Dichloroethene	75-35-4	8260B	ND		0.50	0.094	ug/L	1
cis-1,2-Dichloroethene	156-59-2	8260B	0.77		0.50	0.087	ug/L	1
1,2-Dichloropropane	78-87-5	8260B	ND		0.50	0.081	ug/L	1
trans-1,3-Dichloropropene	10061-02-6	8260B	ND		0.50	0.18	ug/L	1
cis-1,3-Dichloropropene	10061-01-5	8260B	ND		0.50	0.090	ug/L	1
Ethylbenzene	100-41-4	8260B	ND		0.50	0.17	ug/L	1
2-Hexanone	591-78-6	8260B	ND		10	0.27	ug/L	1
Isopropylbenzene	98-82-8	8260B	ND		0.50	0.029	ug/L	1
Methyl acetate	79-20-9	8260B	ND		1.0	0.30	ug/L	1
Methyl tertiary butyl ether (MTBE)	1634-04-4	8260B	ND		0.50	0.019	ug/L	1
4-Methyl-2-pentanone	108-10-1	8260B	ND		10	0.31	ug/L	1
Methylcyclohexane	108-87-2	8260B	ND		5.0	0.95	ug/L	1
Methylene chloride	75-09-2	8260B	0.21	BJ	0.50	0.17	ug/L	1
Styrene	100-42-5	8260B	ND		0.50	0.015	ug/L	1
1,1,2,2-Tetrachloroethane	79-34-5	8260B	ND		0.50	0.013	ug/L	1
Tetrachloroethene	127-18-4	8260B	13		0.50	0.014	ug/L	1
Toluene	108-88-3	8260B	ND		0.50	0.17	ug/L	1
1,1,2-Trichloro-1,2,2-Trifluoroethane	76-13-1	8260B	ND		0.50	0.30	ug/L	1
1,2,4-Trichlorobenzene	120-82-1	8260B	ND		0.50	0.17	ug/L	1
1,1,1-Trichloroethane	71-55-6	8260B	ND		0.50	0.029	ug/L	1
1,1,2-Trichloroethane	79-00-5	8260B	ND		0.50	0.031	ug/L	1

PQL = Practical quantitation limit
B = Detected in the method blank
E = Quantitation of compound exceeded the calibration range
ND = Not detected at or above the MDL
J = Estimated result < PQL and ≥ MDL
P = The RPD between two GC columns exceeds 40%
Where applicable, all soil sample analysis are reported on a dry weight basis unless flagged with a "W"
N = Recovery is out of criteria
H = Out of holding time

Volatile Organic Compounds by GC/MS

Client: ARCADIS U.S., Inc.
Laboratory ID: LD14020-003
Description: F39TW09 (20-25)
Matrix: Aqueous
Date Sampled: 04/12/2010 1330
Date Received: 04/14/2010

Run	Prep Method	Analytical Method	Dilution	Analysis Date	Analyst	Prep Date	Batch
1	5030B	8260B	1	04/17/2010 0300	LBS		31703

Parameter	CAS Number	Analytical Method	Result	Q	PQL	MDL	Units	Run
Trichloroethene	79-01-6	8260B	14		0.50	0.024	ug/L	1
Trichlorofluoromethane	75-69-4	8260B	ND		0.50	0.051	ug/L	1
Vinyl chloride	75-01-4	8260B	ND		0.50	0.065	ug/L	1
Xylenes (total)	1330-20-7	8260B	ND		0.50	0.17	ug/L	1

Surrogate	Q	Run 1 % Recovery	Acceptance Limits
1,2-Dichloroethane-d4		102	70-130
Bromofluorobenzene		93	70-130
Toluene-d8		109	70-130

PQL = Practical quantitation limit
B = Detected in the method blank
E = Quantitation of compound exceeded the calibration range
ND = Not detected at or above the MDL
J = Estimated result < PQL and ≥ MDL
P = The RPD between two GC columns exceeds 40%
Where applicable, all soil sample analysis are reported on a dry weight basis unless flagged with a "W"
N = Recovery is out of criteria
H = Out of holding time

Semivolatile Organic Compounds by GC/MS

Client: ARCADIS U.S., Inc.
Laboratory ID: LD14020-003
Description: F39TW09 (20-25)
Matrix: Aqueous
Date Sampled: 04/12/2010 1330
Date Received: 04/14/2010

Run	Prep Method	Analytical Method	Dilution	Analysis Date	Analyst	Prep Date	Batch
1	3520C	8270D	1	04/21/2010 2116	WD	04/15/2010 0015	31608

Parameter	CAS Number	Analytical Method	Result	Q	PQL	MDL	Units	Run
Acenaphthene	83-32-9	8270D	ND		10	0.90	ug/L	1
Acenaphthylene	208-96-8	8270D	ND		10	1.6	ug/L	1
Acetophenone	98-86-2	8270D	ND		10	3.2	ug/L	1
Anthracene	120-12-7	8270D	ND		10	1.3	ug/L	1
Atrazine	1912-24-9	8270D	ND		10	2.0	ug/L	1
Benzaldehyde	100-52-7	8270D	ND		50	10	ug/L	1
Benzo(a)anthracene	56-55-3	8270D	ND		10	1.5	ug/L	1
Benzo(a)pyrene	50-32-8	8270D	ND		10	1.6	ug/L	1
Benzo(b)fluoranthene	205-99-2	8270D	ND		10	2.0	ug/L	1
Benzo(g,h,i)perylene	191-24-2	8270D	ND		10	2.3	ug/L	1
Benzo(k)fluoranthene	207-08-9	8270D	ND		10	1.2	ug/L	1
1,1'-Biphenyl	92-52-4	8270D	ND		10	2.0	ug/L	1
4-Bromophenyl phenyl ether	101-55-3	8270D	ND		10	1.2	ug/L	1
Butyl benzyl phthalate	85-68-7	8270D	ND		50	17	ug/L	1
Caprolactam	105-60-2	8270D	ND		50	12	ug/L	1
Carbazole	86-74-8	8270D	ND		10	2.5	ug/L	1
4-Chloro-3-methyl phenol	59-50-7	8270D	ND		10	2.2	ug/L	1
4-Chloroaniline	106-47-8	8270D	ND		10	1.3	ug/L	1
bis(2-Chloroethoxy)methane	111-91-1	8270D	ND		10	1.3	ug/L	1
bis(2-Chloroethyl)ether	111-44-4	8270D	ND		10	1.3	ug/L	1
bis(2-Chloroisopropyl)ether	108-60-1	8270D	ND		10	0.80	ug/L	1
2-Chloronaphthalene	91-58-7	8270D	ND		10	1.2	ug/L	1
2-Chlorophenol	95-57-8	8270D	ND		10	1.3	ug/L	1
4-Chlorophenyl phenyl ether	7005-72-3	8270D	ND		10	1.1	ug/L	1
Chrysene	218-01-9	8270D	ND		10	1.2	ug/L	1
Dibenzo(a,h)anthracene	53-70-3	8270D	ND		10	1.3	ug/L	1
Dibenzofuran	132-64-9	8270D	ND		10	1.6	ug/L	1
3,3'-Dichlorobenzidine	91-94-1	8270D	ND		50	8.1	ug/L	1
2,4-Dichlorophenol	120-83-2	8270D	ND		10	1.5	ug/L	1
Diethylphthalate	84-66-2	8270D	ND		50	17	ug/L	1
Dimethyl phthalate	131-11-3	8270D	ND		50	17	ug/L	1
2,4-Dimethylphenol	105-67-9	8270D	ND		10	3.1	ug/L	1
Di-n-butyl phthalate	84-74-2	8270D	ND		50	17	ug/L	1
4,6-Dinitro-2-methylphenol	534-52-1	8270D	ND		50	15	ug/L	1
2,4-Dinitrophenol	51-28-5	8270D	ND		50	2.5	ug/L	1
2,4-Dinitrotoluene	121-14-2	8270D	ND		20	4.5	ug/L	1
2,6-Dinitrotoluene	606-20-2	8270D	ND		20	4.0	ug/L	1
Di-n-octylphthalate	117-84-0	8270D	ND		50	17	ug/L	1
bis(2-Ethylhexyl)phthalate	117-81-7	8270D	ND		50	17	ug/L	1
Fluoranthene	206-44-0	8270D	ND		10	2.1	ug/L	1
Fluorene	86-73-7	8270D	ND		10	1.0	ug/L	1
Hexachlorobenzene	118-74-1	8270D	ND		10	2.1	ug/L	1
Hexachlorobutadiene	87-68-3	8270D	ND		10	0.90	ug/L	1
Hexachlorocyclopentadiene	77-47-4	8270D	ND		50	2.3	ug/L	1

PQL = Practical quantitation limit
B = Detected in the method blank
E = Quantitation of compound exceeded the calibration range
ND = Not detected at or above the MDL
J = Estimated result < PQL and ≥ MDL
P = The RPD between two GC columns exceeds 40%
Where applicable, all soil sample analysis are reported on a dry weight basis unless flagged with a "W"
N = Recovery is out of criteria
H = Out of holding time

Semivolatile Organic Compounds by GC/MS

Client: ARCADIS U.S., Inc.
Laboratory ID: LD14020-003
Description: F39TW09 (20-25)
Matrix: Aqueous
Date Sampled: 04/12/2010 1330
Date Received: 04/14/2010

Run	Prep Method	Analytical Method	Dilution	Analysis Date	Analyst	Prep Date	Batch
1	3520C	8270D	1	04/21/2010 2116	WD	04/15/2010 0015	31608

Parameter	CAS Number	Analytical Method	Result	Q	PQL	MDL	Units	Run
Hexachloroethane	67-72-1	8270D	ND		10	1.1	ug/L	1
Indeno(1,2,3-c,d)pyrene	193-39-5	8270D	ND		10	2.3	ug/L	1
Isophorone	78-59-1	8270D	ND		10	0.80	ug/L	1
2-Methylnaphthalene	91-57-6	8270D	ND		10	0.80	ug/L	1
2-Methylphenol	95-48-7	8270D	ND		10	1.7	ug/L	1
3 & 4-Methylphenol	106-44-5	8270D	ND		20	5.7	ug/L	1
Naphthalene	91-20-3	8270D	ND		10	0.70	ug/L	1
2-Nitroaniline	88-74-4	8270D	ND		20	5.5	ug/L	1
3-Nitroaniline	99-09-2	8270D	ND		20	7.7	ug/L	1
4-Nitroaniline	100-01-6	8270D	ND		20	3.9	ug/L	1
Nitrobenzene	98-95-3	8270D	ND		10	1.0	ug/L	1
2-Nitrophenol	88-75-5	8270D	ND		20	2.7	ug/L	1
4-Nitrophenol	100-02-7	8270D	ND		50	6.4	ug/L	1
N-Nitrosodi-n-propylamine	621-64-7	8270D	ND		10	0.80	ug/L	1
N-Nitrosodiphenylamine (Diphenylamine)	86-30-6	8270D	ND		10	3.8	ug/L	1
Pentachlorophenol	87-86-5	8270D	ND		50	5.4	ug/L	1
Phenanthrene	85-01-8	8270D	ND		10	1.8	ug/L	1
Phenol	108-95-2	8270D	ND		10	1.1	ug/L	1
Pyrene	129-00-0	8270D	ND		10	1.6	ug/L	1
2,4,5-Trichlorophenol	95-95-4	8270D	ND		10	1.8	ug/L	1
2,4,6-Trichlorophenol	88-06-2	8270D	ND		10	2.2	ug/L	1

Surrogate	Q	Run 1 % Recovery	Acceptance Limits
2-Fluorobiphenyl		78	37-129
2-Fluorophenol		66	24-127
Nitrobenzene-d5		75	38-127
Phenol-d5		61	28-128
Terphenyl-d14		60	10-148
2,4,6-Tribromophenol		83	41-144

PQL = Practical quantitation limit
B = Detected in the method blank
E = Quantitation of compound exceeded the calibration range
ND = Not detected at or above the MDL
J = Estimated result < PQL and ≥ MDL
P = The RPD between two GC columns exceeds 40%
Where applicable, all soil sample analysis are reported on a dry weight basis unless flagged with a "W"
N = Recovery is out of criteria
H = Out of holding time

Volatile Organic Compounds by GC/MS

Client: ARCADIS U.S., Inc.
Laboratory ID: LD14020-004
Description: F39TW09 (30-35)
Matrix: Aqueous
Date Sampled: 04/12/2010 1345
Date Received: 04/14/2010

Run	Prep Method	Analytical Method	Dilution	Analysis Date	Analyst	Prep Date	Batch
1	5030B	8260B	1	04/22/2010 0146	DLB		31987

Parameter	CAS Number	Analytical Method	Result	Q	PQL	MDL	Units	Run
Acetone	67-64-1	8260B	7.5	BJ	10	0.061	ug/L	1
Benzene	71-43-2	8260B	0.22	J	0.50	0.027	ug/L	1
Bromodichloromethane	75-27-4	8260B	ND		0.50	0.17	ug/L	1
Bromoform	75-25-2	8260B	ND		0.50	0.010	ug/L	1
Bromomethane (Methyl bromide)	74-83-9	8260B	ND		0.50	0.20	ug/L	1
2-Butanone (MEK)	78-93-3	8260B	ND		10	2.0	ug/L	1
Carbon disulfide	75-15-0	8260B	0.37	J	0.50	0.097	ug/L	1
Carbon tetrachloride	56-23-5	8260B	ND		0.50	0.085	ug/L	1
Chlorobenzene	108-90-7	8260B	ND		0.50	0.17	ug/L	1
Chloroethane	75-00-3	8260B	ND		0.50	0.17	ug/L	1
Chloroform	67-66-3	8260B	ND		0.50	0.17	ug/L	1
Chloromethane (Methyl chloride)	74-87-3	8260B	ND		0.50	0.17	ug/L	1
Cyclohexane	110-82-7	8260B	ND		0.50	0.30	ug/L	1
1,2-Dibromo-3-chloropropane (DBCP)	96-12-8	8260B	ND		0.50	0.069	ug/L	1
Dibromochloromethane	124-48-1	8260B	ND		0.50	0.17	ug/L	1
1,2-Dibromoethane (EDB)	106-93-4	8260B	ND		0.50	0.061	ug/L	1
1,3-Dichlorobenzene	541-73-1	8260B	ND		0.50	0.17	ug/L	1
1,2-Dichlorobenzene	95-50-1	8260B	ND		0.50	0.17	ug/L	1
1,4-Dichlorobenzene	106-46-7	8260B	ND		0.50	0.17	ug/L	1
Dichlorodifluoromethane	75-71-8	8260B	ND		0.50	0.071	ug/L	1
1,1-Dichloroethane	75-34-3	8260B	ND		0.50	0.054	ug/L	1
1,2-Dichloroethane	107-06-2	8260B	ND		0.50	0.023	ug/L	1
trans-1,2-Dichloroethene	156-60-5	8260B	ND		0.50	0.079	ug/L	1
1,1-Dichloroethene	75-35-4	8260B	0.11	J	0.50	0.094	ug/L	1
cis-1,2-Dichloroethene	156-59-2	8260B	6.9		0.50	0.087	ug/L	1
1,2-Dichloropropane	78-87-5	8260B	ND		0.50	0.081	ug/L	1
trans-1,3-Dichloropropene	10061-02-6	8260B	ND		0.50	0.18	ug/L	1
cis-1,3-Dichloropropene	10061-01-5	8260B	ND		0.50	0.090	ug/L	1
Ethylbenzene	100-41-4	8260B	ND		0.50	0.17	ug/L	1
2-Hexanone	591-78-6	8260B	ND		10	0.27	ug/L	1
Isopropylbenzene	98-82-8	8260B	ND		0.50	0.029	ug/L	1
Methyl acetate	79-20-9	8260B	ND		1.0	0.30	ug/L	1
Methyl tertiary butyl ether (MTBE)	1634-04-4	8260B	ND		0.50	0.019	ug/L	1
4-Methyl-2-pentanone	108-10-1	8260B	ND		10	0.31	ug/L	1
Methylcyclohexane	108-87-2	8260B	ND		5.0	0.95	ug/L	1
Methylene chloride	75-09-2	8260B	ND		0.50	0.17	ug/L	1
Styrene	100-42-5	8260B	ND		0.50	0.015	ug/L	1
1,1,2,2-Tetrachloroethane	79-34-5	8260B	ND		0.50	0.013	ug/L	1
Tetrachloroethene	127-18-4	8260B	5.4		0.50	0.014	ug/L	1
Toluene	108-88-3	8260B	ND		0.50	0.17	ug/L	1
1,1,2-Trichloro-1,2,2-Trifluoroethane	76-13-1	8260B	ND		0.50	0.30	ug/L	1
1,2,4-Trichlorobenzene	120-82-1	8260B	ND		0.50	0.17	ug/L	1
1,1,1-Trichloroethane	71-55-6	8260B	ND		0.50	0.029	ug/L	1
1,1,2-Trichloroethane	79-00-5	8260B	ND		0.50	0.031	ug/L	1

PQL = Practical quantitation limit
B = Detected in the method blank
E = Quantitation of compound exceeded the calibration range
ND = Not detected at or above the MDL
J = Estimated result < PQL and ≥ MDL
P = The RPD between two GC columns exceeds 40%
Where applicable, all soil sample analysis are reported on a dry weight basis unless flagged with a "W"
N = Recovery is out of criteria
H = Out of holding time

Volatile Organic Compounds by GC/MS

Client: ARCADIS U.S., Inc.
Laboratory ID: LD14020-004
Description: F39TW09 (30-35)
Matrix: Aqueous
Date Sampled: 04/12/2010 1345
Date Received: 04/14/2010

Run	Prep Method	Analytical Method	Dilution	Analysis Date	Analyst	Prep Date	Batch
1	5030B	8260B	1	04/22/2010 0146	DLB		31987

Parameter	CAS Number	Analytical Method	Result	Q	PQL	MDL	Units	Run
Trichloroethene	79-01-6	8260B	29		0.50	0.024	ug/L	1
Trichlorofluoromethane	75-69-4	8260B	ND		0.50	0.051	ug/L	1
Vinyl chloride	75-01-4	8260B	ND		0.50	0.065	ug/L	1
Xylenes (total)	1330-20-7	8260B	ND		0.50	0.17	ug/L	1

Surrogate	Q	Run 1 % Recovery	Acceptance Limits
1,2-Dichloroethane-d4		96	70-130
Bromofluorobenzene		94	70-130
Toluene-d8		99	70-130

PQL = Practical quantitation limit
B = Detected in the method blank
E = Quantitation of compound exceeded the calibration range
ND = Not detected at or above the MDL
J = Estimated result < PQL and ≥ MDL
P = The RPD between two GC columns exceeds 40%
Where applicable, all soil sample analysis are reported on a dry weight basis unless flagged with a "W"
N = Recovery is out of criteria
H = Out of holding time

Semivolatile Organic Compounds by GC/MS

Client: ARCADIS U.S., Inc.
Laboratory ID: LD14020-004
Description: F39TW09 (30-35)
Matrix: Aqueous
Date Sampled: 04/12/2010 1345
Date Received: 04/14/2010

Run	Prep Method	Analytical Method	Dilution	Analysis Date	Analyst	Prep Date	Batch
1	3520C	8270D	1	04/22/2010 1452	JGH	04/15/2010 0015	31608

Parameter	CAS Number	Analytical Method	Result	Q	PQL	MDL	Units	Run
Acenaphthene	83-32-9	8270D	ND		1.0	0.092	ug/L	1
Acenaphthylene	208-96-8	8270D	ND		1.0	0.16	ug/L	1
Acetophenone	98-86-2	8270D	ND		1.0	0.33	ug/L	1
Anthracene	120-12-7	8270D	ND		1.0	0.13	ug/L	1
Atrazine	1912-24-9	8270D	ND		1.0	0.20	ug/L	1
Benzaldehyde	100-52-7	8270D	ND		5.1	1.0	ug/L	1
Benzo(a)anthracene	56-55-3	8270D	ND		1.0	0.15	ug/L	1
Benzo(a)pyrene	50-32-8	8270D	ND		1.0	0.16	ug/L	1
Benzo(b)fluoranthene	205-99-2	8270D	ND		1.0	0.20	ug/L	1
Benzo(g,h,i)perylene	191-24-2	8270D	ND		1.0	0.23	ug/L	1
Benzo(k)fluoranthene	207-08-9	8270D	ND		1.0	0.12	ug/L	1
1,1'-Biphenyl	92-52-4	8270D	ND		1.0	0.20	ug/L	1
4-Bromophenyl phenyl ether	101-55-3	8270D	ND		1.0	0.12	ug/L	1
Butyl benzyl phthalate	85-68-7	8270D	ND		5.1	1.7	ug/L	1
Caprolactam	105-60-2	8270D	ND		5.1	1.2	ug/L	1
Carbazole	86-74-8	8270D	ND		1.0	0.26	ug/L	1
4-Chloro-3-methyl phenol	59-50-7	8270D	ND		1.0	0.22	ug/L	1
4-Chloroaniline	106-47-8	8270D	ND		1.0	0.13	ug/L	1
bis(2-Chloroethoxy)methane	111-91-1	8270D	ND		1.0	0.13	ug/L	1
bis(2-Chloroethyl)ether	111-44-4	8270D	ND		1.0	0.13	ug/L	1
bis(2-Chloroisopropyl)ether	108-60-1	8270D	ND		1.0	0.082	ug/L	1
2-Chloronaphthalene	91-58-7	8270D	ND		1.0	0.12	ug/L	1
2-Chlorophenol	95-57-8	8270D	ND		1.0	0.13	ug/L	1
4-Chlorophenyl phenyl ether	7005-72-3	8270D	ND		1.0	0.11	ug/L	1
Chrysene	218-01-9	8270D	ND		1.0	0.12	ug/L	1
Dibenzo(a,h)anthracene	53-70-3	8270D	ND		1.0	0.13	ug/L	1
Dibenzofuran	132-64-9	8270D	ND		1.0	0.16	ug/L	1
3,3'-Dichlorobenzidine	91-94-1	8270D	ND		5.1	0.83	ug/L	1
2,4-Dichlorophenol	120-83-2	8270D	ND		1.0	0.15	ug/L	1
Diethylphthalate	84-66-2	8270D	ND		5.1	1.7	ug/L	1
Dimethyl phthalate	131-11-3	8270D	ND		5.1	1.7	ug/L	1
2,4-Dimethylphenol	105-67-9	8270D	ND		1.0	0.32	ug/L	1
Di-n-butyl phthalate	84-74-2	8270D	ND		5.1	1.7	ug/L	1
4,6-Dinitro-2-methylphenol	534-52-1	8270D	ND		5.1	1.5	ug/L	1
2,4-Dinitrophenol	51-28-5	8270D	ND		5.1	0.26	ug/L	1
2,4-Dinitrotoluene	121-14-2	8270D	ND		2.0	0.46	ug/L	1
2,6-Dinitrotoluene	606-20-2	8270D	ND		2.0	0.41	ug/L	1
Di-n-octylphthalate	117-84-0	8270D	ND		5.1	1.7	ug/L	1
bis(2-Ethylhexyl)phthalate	117-81-7	8270D	ND		5.1	1.7	ug/L	1
Fluoranthene	206-44-0	8270D	ND		1.0	0.21	ug/L	1
Fluorene	86-73-7	8270D	ND		1.0	0.10	ug/L	1
Hexachlorobenzene	118-74-1	8270D	ND		1.0	0.21	ug/L	1
Hexachlorobutadiene	87-68-3	8270D	ND		1.0	0.092	ug/L	1
Hexachlorocyclopentadiene	77-47-4	8270D	ND		5.1	0.23	ug/L	1

PQL = Practical quantitation limit
B = Detected in the method blank
E = Quantitation of compound exceeded the calibration range
ND = Not detected at or above the MDL
J = Estimated result < PQL and ≥ MDL
P = The RPD between two GC columns exceeds 40%
Where applicable, all soil sample analysis are reported on a dry weight basis unless flagged with a "W"
N = Recovery is out of criteria
H = Out of holding time

Semivolatile Organic Compounds by GC/MS

Client: ARCADIS U.S., Inc.
Laboratory ID: LD14020-004
Description: F39TW09 (30-35)
Matrix: Aqueous
Date Sampled: 04/12/2010 1345
Date Received: 04/14/2010

Run	Prep Method	Analytical Method	Dilution	Analysis Date	Analyst	Prep Date	Batch
1	3520C	8270D	1	04/22/2010 1452	JGH	04/15/2010 0015	31608

Parameter	CAS Number	Analytical Method	Result	Q	PQL	MDL	Units	Run
Hexachloroethane	67-72-1	8270D	ND		1.0	0.11	ug/L	1
Indeno(1,2,3-c,d)pyrene	193-39-5	8270D	ND		1.0	0.23	ug/L	1
Isophorone	78-59-1	8270D	ND		1.0	0.082	ug/L	1
2-Methylnaphthalene	91-57-6	8270D	ND		1.0	0.082	ug/L	1
2-Methylphenol	95-48-7	8270D	ND		1.0	0.17	ug/L	1
3 & 4-Methylphenol	106-44-5	8270D	ND		2.0	0.58	ug/L	1
Naphthalene	91-20-3	8270D	ND		1.0	0.071	ug/L	1
2-Nitroaniline	88-74-4	8270D	ND		2.0	0.56	ug/L	1
3-Nitroaniline	99-09-2	8270D	ND		2.0	0.79	ug/L	1
4-Nitroaniline	100-01-6	8270D	ND		2.0	0.40	ug/L	1
Nitrobenzene	98-95-3	8270D	ND		1.0	0.10	ug/L	1
2-Nitrophenol	88-75-5	8270D	ND		2.0	0.28	ug/L	1
4-Nitrophenol	100-02-7	8270D	ND		5.1	0.65	ug/L	1
N-Nitrosodi-n-propylamine	621-64-7	8270D	ND		1.0	0.082	ug/L	1
N-Nitrosodiphenylamine (Diphenylamine)	86-30-6	8270D	ND		1.0	0.39	ug/L	1
Pentachlorophenol	87-86-5	8270D	ND		5.1	0.55	ug/L	1
Phenanthrene	85-01-8	8270D	ND		1.0	0.18	ug/L	1
Phenol	108-95-2	8270D	ND		1.0	0.11	ug/L	1
Pyrene	129-00-0	8270D	ND		1.0	0.16	ug/L	1
2,4,5-Trichlorophenol	95-95-4	8270D	ND		1.0	0.18	ug/L	1
2,4,6-Trichlorophenol	88-06-2	8270D	ND		1.0	0.22	ug/L	1

Surrogate	Q	Run 1 % Recovery	Acceptance Limits
2-Fluorobiphenyl		57	37-129
2-Fluorophenol		68	24-127
Nitrobenzene-d5		73	38-127
Phenol-d5		79	28-128
Terphenyl-d14	N	4.8	10-148
2,4,6-Tribromophenol		71	41-144

PQL = Practical quantitation limit
B = Detected in the method blank
E = Quantitation of compound exceeded the calibration range
ND = Not detected at or above the MDL
J = Estimated result < PQL and ≥ MDL
P = The RPD between two GC columns exceeds 40%
Where applicable, all soil sample analysis are reported on a dry weight basis unless flagged with a "W"
N = Recovery is out of criteria
H = Out of holding time

Volatile Organic Compounds by GC/MS

Client: ARCADIS U.S., Inc.
Laboratory ID: LD14020-005
Description: F39TW10 (10-15)
Matrix: Aqueous
Date Sampled: 04/13/2010 0845
Date Received: 04/14/2010

Run	Prep Method	Analytical Method	Dilution	Analysis Date	Analyst	Prep Date	Batch
1	5030B	8260B	1	04/17/2010 0343	LBS		31703

Parameter	CAS Number	Analytical Method	Result	Q	PQL	MDL	Units	Run
Acetone	67-64-1	8260B	3.9	J	10	0.061	ug/L	1
Benzene	71-43-2	8260B	0.12	J	0.50	0.027	ug/L	1
Bromodichloromethane	75-27-4	8260B	ND		0.50	0.17	ug/L	1
Bromoform	75-25-2	8260B	ND		0.50	0.010	ug/L	1
Bromomethane (Methyl bromide)	74-83-9	8260B	ND		0.50	0.20	ug/L	1
2-Butanone (MEK)	78-93-3	8260B	ND		10	2.0	ug/L	1
Carbon disulfide	75-15-0	8260B	0.27	J	0.50	0.097	ug/L	1
Carbon tetrachloride	56-23-5	8260B	ND		0.50	0.085	ug/L	1
Chlorobenzene	108-90-7	8260B	ND		0.50	0.17	ug/L	1
Chloroethane	75-00-3	8260B	ND		0.50	0.17	ug/L	1
Chloroform	67-66-3	8260B	ND		0.50	0.17	ug/L	1
Chloromethane (Methyl chloride)	74-87-3	8260B	ND		0.50	0.17	ug/L	1
Cyclohexane	110-82-7	8260B	ND		0.50	0.30	ug/L	1
1,2-Dibromo-3-chloropropane (DBCP)	96-12-8	8260B	ND		0.50	0.069	ug/L	1
Dibromochloromethane	124-48-1	8260B	ND		0.50	0.17	ug/L	1
1,2-Dibromoethane (EDB)	106-93-4	8260B	ND		0.50	0.061	ug/L	1
1,3-Dichlorobenzene	541-73-1	8260B	ND		0.50	0.17	ug/L	1
1,2-Dichlorobenzene	95-50-1	8260B	ND		0.50	0.17	ug/L	1
1,4-Dichlorobenzene	106-46-7	8260B	ND		0.50	0.17	ug/L	1
Dichlorodifluoromethane	75-71-8	8260B	ND		0.50	0.071	ug/L	1
1,1-Dichloroethane	75-34-3	8260B	ND		0.50	0.054	ug/L	1
1,2-Dichloroethane	107-06-2	8260B	ND		0.50	0.023	ug/L	1
trans-1,2-Dichloroethene	156-60-5	8260B	ND		0.50	0.079	ug/L	1
1,1-Dichloroethene	75-35-4	8260B	ND		0.50	0.094	ug/L	1
cis-1,2-Dichloroethene	156-59-2	8260B	0.62		0.50	0.087	ug/L	1
1,2-Dichloropropane	78-87-5	8260B	ND		0.50	0.081	ug/L	1
trans-1,3-Dichloropropene	10061-02-6	8260B	ND		0.50	0.18	ug/L	1
cis-1,3-Dichloropropene	10061-01-5	8260B	ND		0.50	0.090	ug/L	1
Ethylbenzene	100-41-4	8260B	ND		0.50	0.17	ug/L	1
2-Hexanone	591-78-6	8260B	ND		10	0.27	ug/L	1
Isopropylbenzene	98-82-8	8260B	ND		0.50	0.029	ug/L	1
Methyl acetate	79-20-9	8260B	ND		1.0	0.30	ug/L	1
Methyl tertiary butyl ether (MTBE)	1634-04-4	8260B	ND		0.50	0.019	ug/L	1
4-Methyl-2-pentanone	108-10-1	8260B	ND		10	0.31	ug/L	1
Methylcyclohexane	108-87-2	8260B	ND		5.0	0.95	ug/L	1
Methylene chloride	75-09-2	8260B	0.20	BJ	0.50	0.17	ug/L	1
Styrene	100-42-5	8260B	ND		0.50	0.015	ug/L	1
1,1,2,2-Tetrachloroethane	79-34-5	8260B	ND		0.50	0.013	ug/L	1
Tetrachloroethene	127-18-4	8260B	2.8		0.50	0.014	ug/L	1
Toluene	108-88-3	8260B	ND		0.50	0.17	ug/L	1
1,1,2-Trichloro-1,2,2-Trifluoroethane	76-13-1	8260B	ND		0.50	0.30	ug/L	1
1,2,4-Trichlorobenzene	120-82-1	8260B	ND		0.50	0.17	ug/L	1
1,1,1-Trichloroethane	71-55-6	8260B	ND		0.50	0.029	ug/L	1
1,1,2-Trichloroethane	79-00-5	8260B	ND		0.50	0.031	ug/L	1

PQL = Practical quantitation limit
B = Detected in the method blank
E = Quantitation of compound exceeded the calibration range
ND = Not detected at or above the MDL
J = Estimated result < PQL and ≥ MDL
P = The RPD between two GC columns exceeds 40%
Where applicable, all soil sample analysis are reported on a dry weight basis unless flagged with a "W"
N = Recovery is out of criteria
H = Out of holding time

Volatile Organic Compounds by GC/MS

Client: ARCADIS U.S., Inc.
Laboratory ID: LD14020-005
Description: F39TW10 (10-15)
Matrix: Aqueous
Date Sampled: 04/13/2010 0845
Date Received: 04/14/2010

Run	Prep Method	Analytical Method	Dilution	Analysis Date	Analyst	Prep Date	Batch
1	5030B	8260B	1	04/17/2010 0343	LBS		31703

Parameter	CAS Number	Analytical Method	Result	Q	PQL	MDL	Units	Run
Trichloroethene	79-01-6	8260B	12		0.50	0.024	ug/L	1
Trichlorofluoromethane	75-69-4	8260B	ND		0.50	0.051	ug/L	1
Vinyl chloride	75-01-4	8260B	ND		0.50	0.065	ug/L	1
Xylenes (total)	1330-20-7	8260B	ND		0.50	0.17	ug/L	1

Surrogate	Q	Run 1 % Recovery	Acceptance Limits
1,2-Dichloroethane-d4		104	70-130
Bromofluorobenzene		92	70-130
Toluene-d8		109	70-130

PQL = Practical quantitation limit
B = Detected in the method blank
E = Quantitation of compound exceeded the calibration range
ND = Not detected at or above the MDL
J = Estimated result < PQL and ≥ MDL
P = The RPD between two GC columns exceeds 40%
Where applicable, all soil sample analysis are reported on a dry weight basis unless flagged with a "W"
N = Recovery is out of criteria
H = Out of holding time

Semivolatile Organic Compounds by GC/MS

Client: ARCADIS U.S., Inc.
Laboratory ID: LD14020-005
Description: F39TW10 (10-15)
Matrix: Aqueous
Date Sampled: 04/13/2010 0845
Date Received: 04/14/2010

Run	Prep Method	Analytical Method	Dilution	Analysis Date	Analyst	Prep Date	Batch
1	3520C	8270D	1	04/21/2010 2237	WD	04/15/2010 0015	31608

Parameter	CAS Number	Analytical Method	Result	Q	PQL	MDL	Units	Run
Acenaphthene	83-32-9	8270D	ND		1.0	0.092	ug/L	1
Acenaphthylene	208-96-8	8270D	ND		1.0	0.16	ug/L	1
Acetophenone	98-86-2	8270D	ND		1.0	0.33	ug/L	1
Anthracene	120-12-7	8270D	ND		1.0	0.13	ug/L	1
Atrazine	1912-24-9	8270D	ND		1.0	0.20	ug/L	1
Benzaldehyde	100-52-7	8270D	ND		5.1	1.0	ug/L	1
Benzo(a)anthracene	56-55-3	8270D	ND		1.0	0.15	ug/L	1
Benzo(a)pyrene	50-32-8	8270D	ND		1.0	0.16	ug/L	1
Benzo(b)fluoranthene	205-99-2	8270D	ND		1.0	0.20	ug/L	1
Benzo(g,h,i)perylene	191-24-2	8270D	ND		1.0	0.23	ug/L	1
Benzo(k)fluoranthene	207-08-9	8270D	ND		1.0	0.12	ug/L	1
1,1'-Biphenyl	92-52-4	8270D	ND		1.0	0.20	ug/L	1
4-Bromophenyl phenyl ether	101-55-3	8270D	ND		1.0	0.12	ug/L	1
Butyl benzyl phthalate	85-68-7	8270D	ND		5.1	1.7	ug/L	1
Caprolactam	105-60-2	8270D	ND		5.1	1.2	ug/L	1
Carbazole	86-74-8	8270D	ND		1.0	0.26	ug/L	1
4-Chloro-3-methyl phenol	59-50-7	8270D	ND		1.0	0.22	ug/L	1
4-Chloroaniline	106-47-8	8270D	ND		1.0	0.13	ug/L	1
bis(2-Chloroethoxy)methane	111-91-1	8270D	ND		1.0	0.13	ug/L	1
bis(2-Chloroethyl)ether	111-44-4	8270D	ND		1.0	0.13	ug/L	1
bis(2-Chloroisopropyl)ether	108-60-1	8270D	ND		1.0	0.082	ug/L	1
2-Chloronaphthalene	91-58-7	8270D	ND		1.0	0.12	ug/L	1
2-Chlorophenol	95-57-8	8270D	ND		1.0	0.13	ug/L	1
4-Chlorophenyl phenyl ether	7005-72-3	8270D	ND		1.0	0.11	ug/L	1
Chrysene	218-01-9	8270D	ND		1.0	0.12	ug/L	1
Dibenzo(a,h)anthracene	53-70-3	8270D	ND		1.0	0.13	ug/L	1
Dibenzofuran	132-64-9	8270D	ND		1.0	0.16	ug/L	1
3,3'-Dichlorobenzidine	91-94-1	8270D	ND		5.1	0.83	ug/L	1
2,4-Dichlorophenol	120-83-2	8270D	ND		1.0	0.15	ug/L	1
Diethylphthalate	84-66-2	8270D	ND		5.1	1.7	ug/L	1
Dimethyl phthalate	131-11-3	8270D	ND		5.1	1.7	ug/L	1
2,4-Dimethylphenol	105-67-9	8270D	ND		1.0	0.32	ug/L	1
Di-n-butyl phthalate	84-74-2	8270D	ND		5.1	1.7	ug/L	1
4,6-Dinitro-2-methylphenol	534-52-1	8270D	ND		5.1	1.5	ug/L	1
2,4-Dinitrophenol	51-28-5	8270D	ND		5.1	0.26	ug/L	1
2,4-Dinitrotoluene	121-14-2	8270D	ND		2.0	0.46	ug/L	1
2,6-Dinitrotoluene	606-20-2	8270D	ND		2.0	0.41	ug/L	1
Di-n-octylphthalate	117-84-0	8270D	ND		5.1	1.7	ug/L	1
bis(2-Ethylhexyl)phthalate	117-81-7	8270D	ND		5.1	1.7	ug/L	1
Fluoranthene	206-44-0	8270D	ND		1.0	0.21	ug/L	1
Fluorene	86-73-7	8270D	ND		1.0	0.10	ug/L	1
Hexachlorobenzene	118-74-1	8270D	ND		1.0	0.21	ug/L	1
Hexachlorobutadiene	87-68-3	8270D	ND		1.0	0.092	ug/L	1
Hexachlorocyclopentadiene	77-47-4	8270D	ND		5.1	0.23	ug/L	1

PQL = Practical quantitation limit
B = Detected in the method blank
E = Quantitation of compound exceeded the calibration range
ND = Not detected at or above the MDL
J = Estimated result < PQL and ≥ MDL
P = The RPD between two GC columns exceeds 40%
Where applicable, all soil sample analysis are reported on a dry weight basis unless flagged with a "W"
N = Recovery is out of criteria
H = Out of holding time

Semivolatile Organic Compounds by GC/MS

Client: ARCADIS U.S., Inc.
Laboratory ID: LD14020-005
Description: F39TW10 (10-15)
Matrix: Aqueous
Date Sampled: 04/13/2010 0845
Date Received: 04/14/2010

Run	Prep Method	Analytical Method	Dilution	Analysis Date	Analyst	Prep Date	Batch
1	3520C	8270D	1	04/21/2010 2237	WD	04/15/2010 0015	31608

Parameter	CAS Number	Analytical Method	Result	Q	PQL	MDL	Units	Run
Hexachloroethane	67-72-1	8270D	ND		1.0	0.11	ug/L	1
Indeno(1,2,3-c,d)pyrene	193-39-5	8270D	ND		1.0	0.23	ug/L	1
Isophorone	78-59-1	8270D	ND		1.0	0.082	ug/L	1
2-Methylnaphthalene	91-57-6	8270D	ND		1.0	0.082	ug/L	1
2-Methylphenol	95-48-7	8270D	ND		1.0	0.17	ug/L	1
3 & 4-Methylphenol	106-44-5	8270D	ND		2.0	0.58	ug/L	1
Naphthalene	91-20-3	8270D	ND		1.0	0.071	ug/L	1
2-Nitroaniline	88-74-4	8270D	ND		2.0	0.56	ug/L	1
3-Nitroaniline	99-09-2	8270D	ND		2.0	0.79	ug/L	1
4-Nitroaniline	100-01-6	8270D	ND		2.0	0.40	ug/L	1
Nitrobenzene	98-95-3	8270D	ND		1.0	0.10	ug/L	1
2-Nitrophenol	88-75-5	8270D	ND		2.0	0.28	ug/L	1
4-Nitrophenol	100-02-7	8270D	ND		5.1	0.65	ug/L	1
N-Nitrosodi-n-propylamine	621-64-7	8270D	ND		1.0	0.082	ug/L	1
N-Nitrosodiphenylamine (Diphenylamine)	86-30-6	8270D	ND		1.0	0.39	ug/L	1
Pentachlorophenol	87-86-5	8270D	ND		5.1	0.55	ug/L	1
Phenanthrene	85-01-8	8270D	ND		1.0	0.18	ug/L	1
Phenol	108-95-2	8270D	ND		1.0	0.11	ug/L	1
Pyrene	129-00-0	8270D	ND		1.0	0.16	ug/L	1
2,4,5-Trichlorophenol	95-95-4	8270D	ND		1.0	0.18	ug/L	1
2,4,6-Trichlorophenol	88-06-2	8270D	ND		1.0	0.22	ug/L	1

Surrogate	Q	Run 1 % Recovery	Acceptance Limits
2-Fluorobiphenyl		74	37-129
2-Fluorophenol		68	24-127
Nitrobenzene-d5		76	38-127
Phenol-d5		72	28-128
Terphenyl-d14		17	10-148
2,4,6-Tribromophenol		79	41-144

PQL = Practical quantitation limit
B = Detected in the method blank
E = Quantitation of compound exceeded the calibration range
ND = Not detected at or above the MDL
J = Estimated result < PQL and ≥ MDL
P = The RPD between two GC columns exceeds 40%
Where applicable, all soil sample analysis are reported on a dry weight basis unless flagged with a "W"
N = Recovery is out of criteria
H = Out of holding time

Volatile Organic Compounds by GC/MS

Client: ARCADIS U.S., Inc.
Laboratory ID: LD14020-006
Description: F39TW10 (40-45)
Matrix: Aqueous
Date Sampled: 04/13/2010 0900
Date Received: 04/14/2010

Run	Prep Method	Analytical Method	Dilution	Analysis Date	Analyst	Prep Date	Batch
1	5030B	8260B	1	04/17/2010 0404	LBS		31703

Parameter	CAS Number	Analytical Method	Result	Q	PQL	MDL	Units	Run
Acetone	67-64-1	8260B	6.2	J	10	0.061	ug/L	1
Benzene	71-43-2	8260B	0.17	J	0.50	0.027	ug/L	1
Bromodichloromethane	75-27-4	8260B	ND		0.50	0.17	ug/L	1
Bromoform	75-25-2	8260B	ND		0.50	0.010	ug/L	1
Bromomethane (Methyl bromide)	74-83-9	8260B	ND		0.50	0.20	ug/L	1
2-Butanone (MEK)	78-93-3	8260B	ND		10	2.0	ug/L	1
Carbon disulfide	75-15-0	8260B	ND		0.50	0.097	ug/L	1
Carbon tetrachloride	56-23-5	8260B	ND		0.50	0.085	ug/L	1
Chlorobenzene	108-90-7	8260B	ND		0.50	0.17	ug/L	1
Chloroethane	75-00-3	8260B	ND		0.50	0.17	ug/L	1
Chloroform	67-66-3	8260B	ND		0.50	0.17	ug/L	1
Chloromethane (Methyl chloride)	74-87-3	8260B	ND		0.50	0.17	ug/L	1
Cyclohexane	110-82-7	8260B	ND		0.50	0.30	ug/L	1
1,2-Dibromo-3-chloropropane (DBCP)	96-12-8	8260B	ND		0.50	0.069	ug/L	1
Dibromochloromethane	124-48-1	8260B	ND		0.50	0.17	ug/L	1
1,2-Dibromoethane (EDB)	106-93-4	8260B	ND		0.50	0.061	ug/L	1
1,3-Dichlorobenzene	541-73-1	8260B	ND		0.50	0.17	ug/L	1
1,2-Dichlorobenzene	95-50-1	8260B	ND		0.50	0.17	ug/L	1
1,4-Dichlorobenzene	106-46-7	8260B	ND		0.50	0.17	ug/L	1
Dichlorodifluoromethane	75-71-8	8260B	ND		0.50	0.071	ug/L	1
1,1-Dichloroethane	75-34-3	8260B	ND		0.50	0.054	ug/L	1
1,2-Dichloroethane	107-06-2	8260B	ND		0.50	0.023	ug/L	1
trans-1,2-Dichloroethene	156-60-5	8260B	ND		0.50	0.079	ug/L	1
1,1-Dichloroethene	75-35-4	8260B	ND		0.50	0.094	ug/L	1
cis-1,2-Dichloroethene	156-59-2	8260B	ND		0.50	0.087	ug/L	1
1,2-Dichloropropane	78-87-5	8260B	ND		0.50	0.081	ug/L	1
trans-1,3-Dichloropropene	10061-02-6	8260B	ND		0.50	0.18	ug/L	1
cis-1,3-Dichloropropene	10061-01-5	8260B	ND		0.50	0.090	ug/L	1
Ethylbenzene	100-41-4	8260B	ND		0.50	0.17	ug/L	1
2-Hexanone	591-78-6	8260B	ND		10	0.27	ug/L	1
Isopropylbenzene	98-82-8	8260B	ND		0.50	0.029	ug/L	1
Methyl acetate	79-20-9	8260B	ND		1.0	0.30	ug/L	1
Methyl tertiary butyl ether (MTBE)	1634-04-4	8260B	ND		0.50	0.019	ug/L	1
4-Methyl-2-pentanone	108-10-1	8260B	ND		10	0.31	ug/L	1
Methylcyclohexane	108-87-2	8260B	ND		5.0	0.95	ug/L	1
Methylene chloride	75-09-2	8260B	0.23	BJ	0.50	0.17	ug/L	1
Styrene	100-42-5	8260B	ND		0.50	0.015	ug/L	1
1,1,2,2-Tetrachloroethane	79-34-5	8260B	ND		0.50	0.013	ug/L	1
Tetrachloroethene	127-18-4	8260B	ND		0.50	0.014	ug/L	1
Toluene	108-88-3	8260B	0.23	J	0.50	0.17	ug/L	1
1,1,2-Trichloro-1,2,2-Trifluoroethane	76-13-1	8260B	ND		0.50	0.30	ug/L	1
1,2,4-Trichlorobenzene	120-82-1	8260B	ND		0.50	0.17	ug/L	1
1,1,1-Trichloroethane	71-55-6	8260B	ND		0.50	0.029	ug/L	1
1,1,2-Trichloroethane	79-00-5	8260B	ND		0.50	0.031	ug/L	1

PQL = Practical quantitation limit
B = Detected in the method blank
E = Quantitation of compound exceeded the calibration range
ND = Not detected at or above the MDL
J = Estimated result < PQL and ≥ MDL
P = The RPD between two GC columns exceeds 40%
Where applicable, all soil sample analysis are reported on a dry weight basis unless flagged with a "W"
N = Recovery is out of criteria
H = Out of holding time

Volatile Organic Compounds by GC/MS

Client: ARCADIS U.S., Inc.
Laboratory ID: LD14020-006
Description: F39TW10 (40-45)
Matrix: Aqueous
Date Sampled: 04/13/2010 0900
Date Received: 04/14/2010

Run	Prep Method	Analytical Method	Dilution	Analysis Date	Analyst	Prep Date	Batch
1	5030B	8260B	1	04/17/2010 0404	LBS		31703

Parameter	CAS Number	Analytical Method	Result	Q	PQL	MDL	Units	Run
Trichloroethene	79-01-6	8260B	ND		0.50	0.024	ug/L	1
Trichlorofluoromethane	75-69-4	8260B	ND		0.50	0.051	ug/L	1
Vinyl chloride	75-01-4	8260B	ND		0.50	0.065	ug/L	1
Xylenes (total)	1330-20-7	8260B	ND		0.50	0.17	ug/L	1

Surrogate	Q	Run 1 % Recovery	Acceptance Limits
1,2-Dichloroethane-d4		104	70-130
Bromofluorobenzene		93	70-130
Toluene-d8		108	70-130

PQL = Practical quantitation limit
B = Detected in the method blank
E = Quantitation of compound exceeded the calibration range
ND = Not detected at or above the MDL
J = Estimated result < PQL and ≥ MDL
P = The RPD between two GC columns exceeds 40%
Where applicable, all soil sample analysis are reported on a dry weight basis unless flagged with a "W"
N = Recovery is out of criteria
H = Out of holding time

Semivolatile Organic Compounds by GC/MS

Client: ARCADIS U.S., Inc.
Laboratory ID: LD14020-006
Description: F39TW10 (40-45)
Matrix: Aqueous
Date Sampled: 04/13/2010 0900
Date Received: 04/14/2010

Run	Prep Method	Analytical Method	Dilution	Analysis Date	Analyst	Prep Date	Batch
1	3520C	8270D	1	04/22/2010 1551	JGH	04/15/2010 0015	31608
2	3520C	8270D	1	04/29/2010 1449	WD	04/26/2010 2104	32229

Parameter	CAS Number	Analytical Method	Result	Q	PQL	MDL	Units	Run
Acenaphthene	83-32-9	8270D	ND		1.0	0.092	ug/L	1
Acenaphthylene	208-96-8	8270D	ND		1.0	0.16	ug/L	1
Acetophenone	98-86-2	8270D	ND		1.0	0.33	ug/L	1
Anthracene	120-12-7	8270D	ND		1.0	0.13	ug/L	1
Atrazine	1912-24-9	8270D	ND		1.0	0.20	ug/L	1
Benzaldehyde	100-52-7	8270D	ND		5.1	1.0	ug/L	1
Benzo(a)anthracene	56-55-3	8270D	ND		1.0	0.15	ug/L	1
Benzo(a)pyrene	50-32-8	8270D	ND		1.0	0.16	ug/L	1
Benzo(b)fluoranthene	205-99-2	8270D	ND		1.0	0.20	ug/L	1
Benzo(g,h,i)perylene	191-24-2	8270D	ND		1.0	0.23	ug/L	1
Benzo(k)fluoranthene	207-08-9	8270D	ND		1.0	0.12	ug/L	1
1,1'-Biphenyl	92-52-4	8270D	ND		1.0	0.20	ug/L	1
4-Bromophenyl phenyl ether	101-55-3	8270D	ND		1.0	0.12	ug/L	1
Butyl benzyl phthalate	85-68-7	8270D	ND		5.1	1.7	ug/L	1
Caprolactam	105-60-2	8270D	ND		5.1	1.2	ug/L	1
Carbazole	86-74-8	8270D	ND		1.0	0.26	ug/L	1
4-Chloro-3-methyl phenol	59-50-7	8270D	ND		1.0	0.22	ug/L	1
4-Chloroaniline	106-47-8	8270D	ND		1.0	0.13	ug/L	1
bis(2-Chloroethoxy)methane	111-91-1	8270D	ND		1.0	0.13	ug/L	1
bis(2-Chloroethyl)ether	111-44-4	8270D	ND		1.0	0.13	ug/L	1
bis(2-Chloroisopropyl)ether	108-60-1	8270D	ND		1.0	0.082	ug/L	1
2-Chloronaphthalene	91-58-7	8270D	ND		1.0	0.12	ug/L	1
2-Chlorophenol	95-57-8	8270D	ND		1.0	0.13	ug/L	1
4-Chlorophenyl phenyl ether	7005-72-3	8270D	ND		1.0	0.11	ug/L	1
Chrysene	218-01-9	8270D	ND		1.0	0.12	ug/L	1
Dibenzo(a,h)anthracene	53-70-3	8270D	ND		1.0	0.13	ug/L	1
Dibenzofuran	132-64-9	8270D	ND		1.0	0.16	ug/L	1
3,3'-Dichlorobenzidine	91-94-1	8270D	ND		5.1	0.83	ug/L	1
2,4-Dichlorophenol	120-83-2	8270D	ND		1.0	0.15	ug/L	1
Diethylphthalate	84-66-2	8270D	ND		5.1	1.7	ug/L	1
Dimethyl phthalate	131-11-3	8270D	ND		5.1	1.7	ug/L	1
2,4-Dimethylphenol	105-67-9	8270D	ND		1.0	0.32	ug/L	1
Di-n-butyl phthalate	84-74-2	8270D	ND		5.1	1.7	ug/L	1
4,6-Dinitro-2-methylphenol	534-52-1	8270D	ND		5.1	1.5	ug/L	1
2,4-Dinitrophenol	51-28-5	8270D	ND		5.1	0.26	ug/L	1
2,4-Dinitrotoluene	121-14-2	8270D	ND		2.0	0.46	ug/L	1
2,6-Dinitrotoluene	606-20-2	8270D	ND		2.0	0.41	ug/L	1
Di-n-octylphthalate	117-84-0	8270D	ND		5.1	1.7	ug/L	1
bis(2-Ethylhexyl)phthalate	117-81-7	8270D	ND		5.1	1.7	ug/L	1
Fluoranthene	206-44-0	8270D	ND		1.0	0.21	ug/L	1
Fluorene	86-73-7	8270D	ND		1.0	0.10	ug/L	1
Hexachlorobenzene	118-74-1	8270D	ND		1.0	0.21	ug/L	1
Hexachlorobutadiene	87-68-3	8270D	ND		1.0	0.092	ug/L	1

PQL = Practical quantitation limit
B = Detected in the method blank
E = Quantitation of compound exceeded the calibration range
ND = Not detected at or above the MDL
J = Estimated result < PQL and ≥ MDL
P = The RPD between two GC columns exceeds 40%
Where applicable, all soil sample analysis are reported on a dry weight basis unless flagged with a "W"
N = Recovery is out of criteria
H = Out of holding time

Semivolatile Organic Compounds by GC/MS

Client: ARCADIS U.S., Inc.
Laboratory ID: LD14020-006
Description: F39TW10 (40-45)
Matrix: Aqueous
Date Sampled: 04/13/2010 0900
Date Received: 04/14/2010

Run	Prep Method	Analytical Method	Dilution	Analysis Date	Analyst	Prep Date	Batch
1	3520C	8270D	1	04/22/2010 1551	JGH	04/15/2010 0015	31608
2	3520C	8270D	1	04/29/2010 1449	WD	04/26/2010 2104	32229

Parameter	CAS Number	Analytical Method	Result	Q	PQL	MDL	Units	Run
Hexachlorocyclopentadiene	77-47-4	8270D	ND		5.1	0.23	ug/L	1
Hexachloroethane	67-72-1	8270D	ND		1.0	0.11	ug/L	1
Indeno(1,2,3-c,d)pyrene	193-39-5	8270D	ND		1.0	0.23	ug/L	1
Isophorone	78-59-1	8270D	ND		1.0	0.082	ug/L	1
2-Methylnaphthalene	91-57-6	8270D	ND		1.0	0.082	ug/L	1
2-Methylphenol	95-48-7	8270D	ND		1.0	0.17	ug/L	1
3 & 4-Methylphenol	106-44-5	8270D	ND		2.0	0.58	ug/L	1
Naphthalene	91-20-3	8270D	ND		1.0	0.071	ug/L	1
2-Nitroaniline	88-74-4	8270D	ND		2.0	0.56	ug/L	1
3-Nitroaniline	99-09-2	8270D	ND		2.0	0.79	ug/L	1
4-Nitroaniline	100-01-6	8270D	ND		2.0	0.40	ug/L	1
Nitrobenzene	98-95-3	8270D	ND		1.0	0.10	ug/L	1
2-Nitrophenol	88-75-5	8270D	ND		2.0	0.28	ug/L	1
4-Nitrophenol	100-02-7	8270D	ND		5.1	0.65	ug/L	1
N-Nitrosodi-n-propylamine	621-64-7	8270D	ND		1.0	0.082	ug/L	1
N-Nitrosodiphenylamine (Diphenylamine)	86-30-6	8270D	ND		1.0	0.39	ug/L	1
Pentachlorophenol	87-86-5	8270D	ND		5.1	0.55	ug/L	1
Phenanthrene	85-01-8	8270D	ND		1.0	0.18	ug/L	1
Phenol	108-95-2	8270D	ND		1.0	0.11	ug/L	1
Pyrene	129-00-0	8270D	ND		1.0	0.16	ug/L	1
2,4,5-Trichlorophenol	95-95-4	8270D	ND		1.0	0.18	ug/L	1
2,4,6-Trichlorophenol	88-06-2	8270D	ND		1.0	0.22	ug/L	1

Surrogate	Q	Run 1 % Recovery	Acceptance Limits	Q	Run 2 % Recovery	Acceptance Limits
2-Fluorobiphenyl		65	37-129	H	57	37-129
2-Fluorophenol		59	24-127	H	67	24-127
Nitrobenzene-d5	N	0.36	38-127	HN	19	38-127
Phenol-d5		42	28-128	H	51	28-128
Terphenyl-d14		15	10-148	H	16	10-148
2,4,6-Tribromophenol		74	41-144	H	62	41-144

PQL = Practical quantitation limit
B = Detected in the method blank
E = Quantitation of compound exceeded the calibration range
ND = Not detected at or above the MDL
J = Estimated result < PQL and ≥ MDL
P = The RPD between two GC columns exceeds 40%
Where applicable, all soil sample analysis are reported on a dry weight basis unless flagged with a "W"
N = Recovery is out of criteria
H = Out of holding time

Semivolatile Organic Compounds by GC/MS

Client: ARCADIS U.S., Inc.
Laboratory ID: LD14020-006
Description: F39TW10 (40-45)
Matrix: Aqueous
Date Sampled: 04/13/2010 0900
Date Received: 04/14/2010

Run	Prep Method	Analytical Method	Dilution	Analysis Date	Analyst	Prep Date	Batch
1	3520C	8270D	1	04/22/2010 1551	JGH	04/15/2010 0015	31608
2	3520C	8270D	1	04/29/2010 1449	WD	04/26/2010 2104	32229

Parameter	CAS Number	Analytical Method	Result	Q	PQL	MDL	Units	Run
Acenaphthene	83-32-9	8270D	ND	H	1.0	0.091	ug/L	2
Acenaphthylene	208-96-8	8270D	ND	H	1.0	0.16	ug/L	2
Acetophenone	98-86-2	8270D	ND	H	1.0	0.32	ug/L	2
Anthracene	120-12-7	8270D	ND	H	1.0	0.13	ug/L	2
Atrazine	1912-24-9	8270D	ND	H	1.0	0.20	ug/L	2
Benzaldehyde	100-52-7	8270D	ND	H	5.1	1.0	ug/L	2
Benzo(a)anthracene	56-55-3	8270D	ND	H	1.0	0.15	ug/L	2
Benzo(a)pyrene	50-32-8	8270D	ND	H	1.0	0.16	ug/L	2
Benzo(b)fluoranthene	205-99-2	8270D	ND	H	1.0	0.20	ug/L	2
Benzo(g,h,i)perylene	191-24-2	8270D	ND	H	1.0	0.23	ug/L	2
Benzo(k)fluoranthene	207-08-9	8270D	ND	H	1.0	0.12	ug/L	2
1,1'-Biphenyl	92-52-4	8270D	ND	H	1.0	0.20	ug/L	2
4-Bromophenyl phenyl ether	101-55-3	8270D	ND	H	1.0	0.12	ug/L	2
Butyl benzyl phthalate	85-68-7	8270D	ND	H	5.1	1.7	ug/L	2
Caprolactam	105-60-2	8270D	ND	H	5.1	1.2	ug/L	2
Carbazole	86-74-8	8270D	ND	H	1.0	0.25	ug/L	2
4-Chloro-3-methyl phenol	59-50-7	8270D	ND	H	1.0	0.22	ug/L	2
4-Chloroaniline	106-47-8	8270D	ND	H	1.0	0.13	ug/L	2
bis(2-Chloroethoxy)methane	111-91-1	8270D	ND	H	1.0	0.13	ug/L	2
bis(2-Chloroethyl)ether	111-44-4	8270D	ND	H	1.0	0.13	ug/L	2
bis(2-Chloroisopropyl)ether	108-60-1	8270D	ND	H	1.0	0.081	ug/L	2
2-Chloronaphthalene	91-58-7	8270D	ND	H	1.0	0.12	ug/L	2
2-Chlorophenol	95-57-8	8270D	ND	H	1.0	0.13	ug/L	2
4-Chlorophenyl phenyl ether	7005-72-3	8270D	ND	H	1.0	0.11	ug/L	2
Chrysene	218-01-9	8270D	ND	H	1.0	0.12	ug/L	2
Dibenzo(a,h)anthracene	53-70-3	8270D	ND	H	1.0	0.13	ug/L	2
Dibenzofuran	132-64-9	8270D	ND	H	1.0	0.16	ug/L	2
3,3'-Dichlorobenzidine	91-94-1	8270D	ND	H	5.1	0.82	ug/L	2
2,4-Dichlorophenol	120-83-2	8270D	ND	H	1.0	0.15	ug/L	2
Diethylphthalate	84-66-2	8270D	ND	H	5.1	1.7	ug/L	2
Dimethyl phthalate	131-11-3	8270D	ND	H	5.1	1.7	ug/L	2
2,4-Dimethylphenol	105-67-9	8270D	ND	H	1.0	0.31	ug/L	2
Di-n-butyl phthalate	84-74-2	8270D	ND	H	5.1	1.7	ug/L	2
4,6-Dinitro-2-methylphenol	534-52-1	8270D	ND	H	5.1	1.5	ug/L	2
2,4-Dinitrophenol	51-28-5	8270D	ND	H	5.1	0.25	ug/L	2
2,4-Dinitrotoluene	121-14-2	8270D	ND	H	2.0	0.45	ug/L	2
2,6-Dinitrotoluene	606-20-2	8270D	ND	H	2.0	0.40	ug/L	2
Di-n-octylphthalate	117-84-0	8270D	ND	H	5.1	1.7	ug/L	2
bis(2-Ethylhexyl)phthalate	117-81-7	8270D	ND	H	5.1	1.7	ug/L	2
Fluoranthene	206-44-0	8270D	ND	H	1.0	0.21	ug/L	2
Fluorene	86-73-7	8270D	ND	H	1.0	0.10	ug/L	2
Hexachlorobenzene	118-74-1	8270D	ND	H	1.0	0.21	ug/L	2
Hexachlorobutadiene	87-68-3	8270D	ND	H	1.0	0.091	ug/L	2

PQL = Practical quantitation limit
B = Detected in the method blank
E = Quantitation of compound exceeded the calibration range
ND = Not detected at or above the MDL
J = Estimated result < PQL and ≥ MDL
P = The RPD between two GC columns exceeds 40%
Where applicable, all soil sample analysis are reported on a dry weight basis unless flagged with a "W"
N = Recovery is out of criteria
H = Out of holding time

Semivolatile Organic Compounds by GC/MS

Client: ARCADIS U.S., Inc.
Laboratory ID: LD14020-006
Description: F39TW10 (40-45)
Matrix: Aqueous
Date Sampled: 04/13/2010 0900
Date Received: 04/14/2010

Run	Prep Method	Analytical Method	Dilution	Analysis Date	Analyst	Prep Date	Batch
1	3520C	8270D	1	04/22/2010 1551	JGH	04/15/2010 0015	31608
2	3520C	8270D	1	04/29/2010 1449	WD	04/26/2010 2104	32229

Parameter	CAS Number	Analytical Method	Result	Q	PQL	MDL	Units	Run
Hexachlorocyclopentadiene	77-47-4	8270D	ND	H	5.1	0.23	ug/L	2
Hexachloroethane	67-72-1	8270D	ND	H	1.0	0.11	ug/L	2
Indeno(1,2,3-c,d)pyrene	193-39-5	8270D	ND	H	1.0	0.23	ug/L	2
Isophorone	78-59-1	8270D	ND	H	1.0	0.081	ug/L	2
2-Methylnaphthalene	91-57-6	8270D	ND	H	1.0	0.081	ug/L	2
2-Methylphenol	95-48-7	8270D	ND	H	1.0	0.17	ug/L	2
3 & 4-Methylphenol	106-44-5	8270D	ND	H	2.0	0.58	ug/L	2
Naphthalene	91-20-3	8270D	ND	H	1.0	0.071	ug/L	2
2-Nitroaniline	88-74-4	8270D	ND	H	2.0	0.56	ug/L	2
3-Nitroaniline	99-09-2	8270D	ND	H	2.0	0.78	ug/L	2
4-Nitroaniline	100-01-6	8270D	ND	H	2.0	0.39	ug/L	2
Nitrobenzene	98-95-3	8270D	ND	H	1.0	0.10	ug/L	2
2-Nitrophenol	88-75-5	8270D	ND	H	2.0	0.27	ug/L	2
4-Nitrophenol	100-02-7	8270D	ND	H	5.1	0.65	ug/L	2
N-Nitrosodi-n-propylamine	621-64-7	8270D	ND	H	1.0	0.081	ug/L	2
N-Nitrosodiphenylamine (Diphenylamine)	86-30-6	8270D	ND	H	1.0	0.38	ug/L	2
Pentachlorophenol	87-86-5	8270D	ND	H	5.1	0.55	ug/L	2
Phenanthrene	85-01-8	8270D	ND	H	1.0	0.18	ug/L	2
Phenol	108-95-2	8270D	ND	H	1.0	0.11	ug/L	2
Pyrene	129-00-0	8270D	ND	H	1.0	0.16	ug/L	2
2,4,5-Trichlorophenol	95-95-4	8270D	ND	H	1.0	0.18	ug/L	2
2,4,6-Trichlorophenol	88-06-2	8270D	ND	H	1.0	0.22	ug/L	2

Surrogate	Q	Run 1 % Recovery	Acceptance Limits	Q	Run 2 % Recovery	Acceptance Limits
2-Fluorobiphenyl		65	37-129	H	57	37-129
2-Fluorophenol		59	24-127	H	67	24-127
Nitrobenzene-d5	N	0.36	38-127	HN	19	38-127
Phenol-d5		42	28-128	H	51	28-128
Terphenyl-d14		15	10-148	H	16	10-148
2,4,6-Tribromophenol		74	41-144	H	62	41-144

PQL = Practical quantitation limit
B = Detected in the method blank
E = Quantitation of compound exceeded the calibration range
ND = Not detected at or above the MDL
J = Estimated result < PQL and ≥ MDL
P = The RPD between two GC columns exceeds 40%
Where applicable, all soil sample analysis are reported on a dry weight basis unless flagged with a "W"
N = Recovery is out of criteria
H = Out of holding time

Volatile Organic Compounds by GC/MS

Client: ARCADIS U.S., Inc.
Laboratory ID: LD14020-007
Description: F39TW10 (20-25)
Matrix: Aqueous
Date Sampled: 04/13/2010 1115
Date Received: 04/14/2010

Run	Prep Method	Analytical Method	Dilution	Analysis Date	Analyst	Prep Date	Batch
1	5030B	8260B	1	04/17/2010 0426	LBS		31703

Parameter	CAS Number	Analytical Method	Result	Q	PQL	MDL	Units	Run
Acetone	67-64-1	8260B	7.8	J	10	0.061	ug/L	1
Benzene	71-43-2	8260B	0.12	J	0.50	0.027	ug/L	1
Bromodichloromethane	75-27-4	8260B	ND		0.50	0.17	ug/L	1
Bromoform	75-25-2	8260B	ND		0.50	0.010	ug/L	1
Bromomethane (Methyl bromide)	74-83-9	8260B	ND		0.50	0.20	ug/L	1
2-Butanone (MEK)	78-93-3	8260B	ND		10	2.0	ug/L	1
Carbon disulfide	75-15-0	8260B	0.26	J	0.50	0.097	ug/L	1
Carbon tetrachloride	56-23-5	8260B	ND		0.50	0.085	ug/L	1
Chlorobenzene	108-90-7	8260B	ND		0.50	0.17	ug/L	1
Chloroethane	75-00-3	8260B	ND		0.50	0.17	ug/L	1
Chloroform	67-66-3	8260B	ND		0.50	0.17	ug/L	1
Chloromethane (Methyl chloride)	74-87-3	8260B	ND		0.50	0.17	ug/L	1
Cyclohexane	110-82-7	8260B	ND		0.50	0.30	ug/L	1
1,2-Dibromo-3-chloropropane (DBCP)	96-12-8	8260B	ND		0.50	0.069	ug/L	1
Dibromochloromethane	124-48-1	8260B	ND		0.50	0.17	ug/L	1
1,2-Dibromoethane (EDB)	106-93-4	8260B	ND		0.50	0.061	ug/L	1
1,3-Dichlorobenzene	541-73-1	8260B	ND		0.50	0.17	ug/L	1
1,2-Dichlorobenzene	95-50-1	8260B	ND		0.50	0.17	ug/L	1
1,4-Dichlorobenzene	106-46-7	8260B	ND		0.50	0.17	ug/L	1
Dichlorodifluoromethane	75-71-8	8260B	ND		0.50	0.071	ug/L	1
1,1-Dichloroethane	75-34-3	8260B	ND		0.50	0.054	ug/L	1
1,2-Dichloroethane	107-06-2	8260B	ND		0.50	0.023	ug/L	1
trans-1,2-Dichloroethene	156-60-5	8260B	ND		0.50	0.079	ug/L	1
1,1-Dichloroethene	75-35-4	8260B	ND		0.50	0.094	ug/L	1
cis-1,2-Dichloroethene	156-59-2	8260B	0.44	J	0.50	0.087	ug/L	1
1,2-Dichloropropane	78-87-5	8260B	ND		0.50	0.081	ug/L	1
trans-1,3-Dichloropropene	10061-02-6	8260B	ND		0.50	0.18	ug/L	1
cis-1,3-Dichloropropene	10061-01-5	8260B	ND		0.50	0.090	ug/L	1
Ethylbenzene	100-41-4	8260B	ND		0.50	0.17	ug/L	1
2-Hexanone	591-78-6	8260B	ND		10	0.27	ug/L	1
Isopropylbenzene	98-82-8	8260B	ND		0.50	0.029	ug/L	1
Methyl acetate	79-20-9	8260B	ND		1.0	0.30	ug/L	1
Methyl tertiary butyl ether (MTBE)	1634-04-4	8260B	ND		0.50	0.019	ug/L	1
4-Methyl-2-pentanone	108-10-1	8260B	ND		10	0.31	ug/L	1
Methylcyclohexane	108-87-2	8260B	ND		5.0	0.95	ug/L	1
Methylene chloride	75-09-2	8260B	0.23	BJ	0.50	0.17	ug/L	1
Styrene	100-42-5	8260B	ND		0.50	0.015	ug/L	1
1,1,2,2-Tetrachloroethane	79-34-5	8260B	ND		0.50	0.013	ug/L	1
Tetrachloroethene	127-18-4	8260B	6.9		0.50	0.014	ug/L	1
Toluene	108-88-3	8260B	ND		0.50	0.17	ug/L	1
1,1,2-Trichloro-1,2,2-Trifluoroethane	76-13-1	8260B	ND		0.50	0.30	ug/L	1
1,2,4-Trichlorobenzene	120-82-1	8260B	ND		0.50	0.17	ug/L	1
1,1,1-Trichloroethane	71-55-6	8260B	ND		0.50	0.029	ug/L	1
1,1,2-Trichloroethane	79-00-5	8260B	ND		0.50	0.031	ug/L	1

PQL = Practical quantitation limit
B = Detected in the method blank
E = Quantitation of compound exceeded the calibration range
ND = Not detected at or above the MDL
J = Estimated result < PQL and ≥ MDL
P = The RPD between two GC columns exceeds 40%
Where applicable, all soil sample analysis are reported on a dry weight basis unless flagged with a "W"
N = Recovery is out of criteria
H = Out of holding time

Volatile Organic Compounds by GC/MS

Client: ARCADIS U.S., Inc.
Laboratory ID: LD14020-007
Description: F39TW10 (20-25)
Matrix: Aqueous
Date Sampled: 04/13/2010 1115
Date Received: 04/14/2010

Run	Prep Method	Analytical Method	Dilution	Analysis Date	Analyst	Prep Date	Batch
1	5030B	8260B	1	04/17/2010 0426	LBS		31703

Parameter	CAS Number	Analytical Method	Result	Q	PQL	MDL	Units	Run
Trichloroethene	79-01-6	8260B	7.7		0.50	0.024	ug/L	1
Trichlorofluoromethane	75-69-4	8260B	ND		0.50	0.051	ug/L	1
Vinyl chloride	75-01-4	8260B	ND		0.50	0.065	ug/L	1
Xylenes (total)	1330-20-7	8260B	ND		0.50	0.17	ug/L	1

Surrogate	Q	Run 1 % Recovery	Acceptance Limits
1,2-Dichloroethane-d4		105	70-130
Bromofluorobenzene		92	70-130
Toluene-d8		110	70-130

PQL = Practical quantitation limit
B = Detected in the method blank
E = Quantitation of compound exceeded the calibration range
ND = Not detected at or above the MDL
J = Estimated result < PQL and ≥ MDL
P = The RPD between two GC columns exceeds 40%
Where applicable, all soil sample analysis are reported on a dry weight basis unless flagged with a "W"
N = Recovery is out of criteria
H = Out of holding time

Semivolatile Organic Compounds by GC/MS

Client: ARCADIS U.S., Inc.
Laboratory ID: LD14020-007
Description: F39TW10 (20-25)
Matrix: Aqueous
Date Sampled: 04/13/2010 1115
Date Received: 04/14/2010

Run	Prep Method	Analytical Method	Dilution	Analysis Date	Analyst	Prep Date	Batch
1	3520C	8270D	1	04/21/2010 2317	WD	04/15/2010 0015	31608

Parameter	CAS Number	Analytical Method	Result	Q	PQL	MDL	Units	Run
Acenaphthene	83-32-9	8270D	ND		1.0	0.092	ug/L	1
Acenaphthylene	208-96-8	8270D	ND		1.0	0.16	ug/L	1
Acetophenone	98-86-2	8270D	ND		1.0	0.33	ug/L	1
Anthracene	120-12-7	8270D	ND		1.0	0.13	ug/L	1
Atrazine	1912-24-9	8270D	ND		1.0	0.20	ug/L	1
Benzaldehyde	100-52-7	8270D	ND		5.1	1.0	ug/L	1
Benzo(a)anthracene	56-55-3	8270D	ND		1.0	0.15	ug/L	1
Benzo(a)pyrene	50-32-8	8270D	ND		1.0	0.16	ug/L	1
Benzo(b)fluoranthene	205-99-2	8270D	ND		1.0	0.20	ug/L	1
Benzo(g,h,i)perylene	191-24-2	8270D	ND		1.0	0.23	ug/L	1
Benzo(k)fluoranthene	207-08-9	8270D	ND		1.0	0.12	ug/L	1
1,1'-Biphenyl	92-52-4	8270D	ND		1.0	0.20	ug/L	1
4-Bromophenyl phenyl ether	101-55-3	8270D	ND		1.0	0.12	ug/L	1
Butyl benzyl phthalate	85-68-7	8270D	ND		5.1	1.7	ug/L	1
Caprolactam	105-60-2	8270D	ND		5.1	1.2	ug/L	1
Carbazole	86-74-8	8270D	ND		1.0	0.26	ug/L	1
4-Chloro-3-methyl phenol	59-50-7	8270D	ND		1.0	0.22	ug/L	1
4-Chloroaniline	106-47-8	8270D	ND		1.0	0.13	ug/L	1
bis(2-Chloroethoxy)methane	111-91-1	8270D	ND		1.0	0.13	ug/L	1
bis(2-Chloroethyl)ether	111-44-4	8270D	ND		1.0	0.13	ug/L	1
bis(2-Chloroisopropyl)ether	108-60-1	8270D	ND		1.0	0.082	ug/L	1
2-Chloronaphthalene	91-58-7	8270D	ND		1.0	0.12	ug/L	1
2-Chlorophenol	95-57-8	8270D	ND		1.0	0.13	ug/L	1
4-Chlorophenyl phenyl ether	7005-72-3	8270D	ND		1.0	0.11	ug/L	1
Chrysene	218-01-9	8270D	ND		1.0	0.12	ug/L	1
Dibenzo(a,h)anthracene	53-70-3	8270D	ND		1.0	0.13	ug/L	1
Dibenzofuran	132-64-9	8270D	ND		1.0	0.16	ug/L	1
3,3'-Dichlorobenzidine	91-94-1	8270D	ND		5.1	0.83	ug/L	1
2,4-Dichlorophenol	120-83-2	8270D	ND		1.0	0.15	ug/L	1
Diethylphthalate	84-66-2	8270D	ND		5.1	1.7	ug/L	1
Dimethyl phthalate	131-11-3	8270D	ND		5.1	1.7	ug/L	1
2,4-Dimethylphenol	105-67-9	8270D	ND		1.0	0.32	ug/L	1
Di-n-butyl phthalate	84-74-2	8270D	ND		5.1	1.7	ug/L	1
4,6-Dinitro-2-methylphenol	534-52-1	8270D	ND		5.1	1.5	ug/L	1
2,4-Dinitrophenol	51-28-5	8270D	ND		5.1	0.26	ug/L	1
2,4-Dinitrotoluene	121-14-2	8270D	ND		2.0	0.46	ug/L	1
2,6-Dinitrotoluene	606-20-2	8270D	ND		2.0	0.41	ug/L	1
Di-n-octylphthalate	117-84-0	8270D	ND		5.1	1.7	ug/L	1
bis(2-Ethylhexyl)phthalate	117-81-7	8270D	ND		5.1	1.7	ug/L	1
Fluoranthene	206-44-0	8270D	ND		1.0	0.21	ug/L	1
Fluorene	86-73-7	8270D	ND		1.0	0.10	ug/L	1
Hexachlorobenzene	118-74-1	8270D	ND		1.0	0.21	ug/L	1
Hexachlorobutadiene	87-68-3	8270D	ND		1.0	0.092	ug/L	1
Hexachlorocyclopentadiene	77-47-4	8270D	ND		5.1	0.23	ug/L	1

PQL = Practical quantitation limit
B = Detected in the method blank
E = Quantitation of compound exceeded the calibration range
ND = Not detected at or above the MDL
J = Estimated result < PQL and ≥ MDL
P = The RPD between two GC columns exceeds 40%
Where applicable, all soil sample analysis are reported on a dry weight basis unless flagged with a "W"
N = Recovery is out of criteria
H = Out of holding time

Semivolatile Organic Compounds by GC/MS

Client: ARCADIS U.S., Inc.
Laboratory ID: LD14020-007
Description: F39TW10 (20-25)
Matrix: Aqueous
Date Sampled: 04/13/2010 1115
Date Received: 04/14/2010

Run	Prep Method	Analytical Method	Dilution	Analysis Date	Analyst	Prep Date	Batch
1	3520C	8270D	1	04/21/2010 2317	WD	04/15/2010 0015	31608

Parameter	CAS Number	Analytical Method	Result	Q	PQL	MDL	Units	Run
Hexachloroethane	67-72-1	8270D	ND		1.0	0.11	ug/L	1
Indeno(1,2,3-c,d)pyrene	193-39-5	8270D	ND		1.0	0.23	ug/L	1
Isophorone	78-59-1	8270D	ND		1.0	0.082	ug/L	1
2-Methylnaphthalene	91-57-6	8270D	ND		1.0	0.082	ug/L	1
2-Methylphenol	95-48-7	8270D	ND		1.0	0.17	ug/L	1
3 & 4-Methylphenol	106-44-5	8270D	ND		2.0	0.58	ug/L	1
Naphthalene	91-20-3	8270D	ND		1.0	0.071	ug/L	1
2-Nitroaniline	88-74-4	8270D	ND		2.0	0.56	ug/L	1
3-Nitroaniline	99-09-2	8270D	ND		2.0	0.79	ug/L	1
4-Nitroaniline	100-01-6	8270D	ND		2.0	0.40	ug/L	1
Nitrobenzene	98-95-3	8270D	ND		1.0	0.10	ug/L	1
2-Nitrophenol	88-75-5	8270D	ND		2.0	0.28	ug/L	1
4-Nitrophenol	100-02-7	8270D	ND		5.1	0.65	ug/L	1
N-Nitrosodi-n-propylamine	621-64-7	8270D	ND		1.0	0.082	ug/L	1
N-Nitrosodiphenylamine (Diphenylamine)	86-30-6	8270D	ND		1.0	0.39	ug/L	1
Pentachlorophenol	87-86-5	8270D	ND		5.1	0.55	ug/L	1
Phenanthrene	85-01-8	8270D	ND		1.0	0.18	ug/L	1
Phenol	108-95-2	8270D	ND		1.0	0.11	ug/L	1
Pyrene	129-00-0	8270D	ND		1.0	0.16	ug/L	1
2,4,5-Trichlorophenol	95-95-4	8270D	ND		1.0	0.18	ug/L	1
2,4,6-Trichlorophenol	88-06-2	8270D	ND		1.0	0.22	ug/L	1

Surrogate	Q	Run 1 % Recovery	Acceptance Limits
2-Fluorobiphenyl		75	37-129
2-Fluorophenol		72	24-127
Nitrobenzene-d5		79	38-127
Phenol-d5		81	28-128
Terphenyl-d14		11	10-148
2,4,6-Tribromophenol		79	41-144

PQL = Practical quantitation limit
B = Detected in the method blank
E = Quantitation of compound exceeded the calibration range
ND = Not detected at or above the MDL
J = Estimated result < PQL and ≥ MDL
P = The RPD between two GC columns exceeds 40%
Where applicable, all soil sample analysis are reported on a dry weight basis unless flagged with a "W"
N = Recovery is out of criteria
H = Out of holding time

Volatile Organic Compounds by GC/MS

Client: ARCADIS U.S., Inc.
Laboratory ID: LD14020-008
Description: F39TW10 (30-35)
Matrix: Aqueous
Date Sampled: 04/13/2010 1300
Date Received: 04/14/2010

Run	Prep Method	Analytical Method	Dilution	Analysis Date	Analyst	Prep Date	Batch
1	5030B	8260B	1	04/17/2010 0448	LBS		31703

Parameter	CAS Number	Analytical Method	Result	Q	PQL	MDL	Units	Run
Acetone	67-64-1	8260B	8.0	J	10	0.061	ug/L	1
Benzene	71-43-2	8260B	0.14	J	0.50	0.027	ug/L	1
Bromodichloromethane	75-27-4	8260B	ND		0.50	0.17	ug/L	1
Bromoform	75-25-2	8260B	ND		0.50	0.010	ug/L	1
Bromomethane (Methyl bromide)	74-83-9	8260B	ND		0.50	0.20	ug/L	1
2-Butanone (MEK)	78-93-3	8260B	ND		10	2.0	ug/L	1
Carbon disulfide	75-15-0	8260B	0.55		0.50	0.097	ug/L	1
Carbon tetrachloride	56-23-5	8260B	ND		0.50	0.085	ug/L	1
Chlorobenzene	108-90-7	8260B	ND		0.50	0.17	ug/L	1
Chloroethane	75-00-3	8260B	ND		0.50	0.17	ug/L	1
Chloroform	67-66-3	8260B	ND		0.50	0.17	ug/L	1
Chloromethane (Methyl chloride)	74-87-3	8260B	ND		0.50	0.17	ug/L	1
Cyclohexane	110-82-7	8260B	ND		0.50	0.30	ug/L	1
1,2-Dibromo-3-chloropropane (DBCP)	96-12-8	8260B	ND		0.50	0.069	ug/L	1
Dibromochloromethane	124-48-1	8260B	ND		0.50	0.17	ug/L	1
1,2-Dibromoethane (EDB)	106-93-4	8260B	ND		0.50	0.061	ug/L	1
1,3-Dichlorobenzene	541-73-1	8260B	ND		0.50	0.17	ug/L	1
1,2-Dichlorobenzene	95-50-1	8260B	ND		0.50	0.17	ug/L	1
1,4-Dichlorobenzene	106-46-7	8260B	ND		0.50	0.17	ug/L	1
Dichlorodifluoromethane	75-71-8	8260B	ND		0.50	0.071	ug/L	1
1,1-Dichloroethane	75-34-3	8260B	ND		0.50	0.054	ug/L	1
1,2-Dichloroethane	107-06-2	8260B	ND		0.50	0.023	ug/L	1
trans-1,2-Dichloroethene	156-60-5	8260B	ND		0.50	0.079	ug/L	1
1,1-Dichloroethene	75-35-4	8260B	ND		0.50	0.094	ug/L	1
cis-1,2-Dichloroethene	156-59-2	8260B	1.5		0.50	0.087	ug/L	1
1,2-Dichloropropane	78-87-5	8260B	ND		0.50	0.081	ug/L	1
trans-1,3-Dichloropropene	10061-02-6	8260B	ND		0.50	0.18	ug/L	1
cis-1,3-Dichloropropene	10061-01-5	8260B	ND		0.50	0.090	ug/L	1
Ethylbenzene	100-41-4	8260B	ND		0.50	0.17	ug/L	1
2-Hexanone	591-78-6	8260B	ND		10	0.27	ug/L	1
Isopropylbenzene	98-82-8	8260B	ND		0.50	0.029	ug/L	1
Methyl acetate	79-20-9	8260B	ND		1.0	0.30	ug/L	1
Methyl tertiary butyl ether (MTBE)	1634-04-4	8260B	ND		0.50	0.019	ug/L	1
4-Methyl-2-pentanone	108-10-1	8260B	ND		10	0.31	ug/L	1
Methylcyclohexane	108-87-2	8260B	ND		5.0	0.95	ug/L	1
Methylene chloride	75-09-2	8260B	0.20	BJ	0.50	0.17	ug/L	1
Styrene	100-42-5	8260B	ND		0.50	0.015	ug/L	1
1,1,2,2-Tetrachloroethane	79-34-5	8260B	ND		0.50	0.013	ug/L	1
Tetrachloroethene	127-18-4	8260B	11		0.50	0.014	ug/L	1
Toluene	108-88-3	8260B	ND		0.50	0.17	ug/L	1
1,1,2-Trichloro-1,2,2-Trifluoroethane	76-13-1	8260B	ND		0.50	0.30	ug/L	1
1,2,4-Trichlorobenzene	120-82-1	8260B	ND		0.50	0.17	ug/L	1
1,1,1-Trichloroethane	71-55-6	8260B	ND		0.50	0.029	ug/L	1
1,1,2-Trichloroethane	79-00-5	8260B	ND		0.50	0.031	ug/L	1

PQL = Practical quantitation limit
B = Detected in the method blank
E = Quantitation of compound exceeded the calibration range
ND = Not detected at or above the MDL
J = Estimated result < PQL and ≥ MDL
P = The RPD between two GC columns exceeds 40%
Where applicable, all soil sample analysis are reported on a dry weight basis unless flagged with a "W"
N = Recovery is out of criteria
H = Out of holding time

Volatile Organic Compounds by GC/MS

Client: ARCADIS U.S., Inc.
Laboratory ID: LD14020-008
Description: F39TW10 (30-35)
Matrix: Aqueous
Date Sampled: 04/13/2010 1300
Date Received: 04/14/2010

Run	Prep Method	Analytical Method	Dilution	Analysis Date	Analyst	Prep Date	Batch
1	5030B	8260B	1	04/17/2010 0448	LBS		31703

Parameter	CAS Number	Analytical Method	Result	Q	PQL	MDL	Units	Run
Trichloroethene	79-01-6	8260B	15		0.50	0.024	ug/L	1
Trichlorofluoromethane	75-69-4	8260B	ND		0.50	0.051	ug/L	1
Vinyl chloride	75-01-4	8260B	ND		0.50	0.065	ug/L	1
Xylenes (total)	1330-20-7	8260B	ND		0.50	0.17	ug/L	1

Surrogate	Q	Run 1 % Recovery	Acceptance Limits
1,2-Dichloroethane-d4		106	70-130
Bromofluorobenzene		92	70-130
Toluene-d8		109	70-130

PQL = Practical quantitation limit
B = Detected in the method blank
E = Quantitation of compound exceeded the calibration range
ND = Not detected at or above the MDL
J = Estimated result < PQL and ≥ MDL
P = The RPD between two GC columns exceeds 40%
Where applicable, all soil sample analysis are reported on a dry weight basis unless flagged with a "W"
N = Recovery is out of criteria
H = Out of holding time

Semivolatile Organic Compounds by GC/MS

Client: ARCADIS U.S., Inc.
Laboratory ID: LD14020-008
Description: F39TW10 (30-35)
Matrix: Aqueous
Date Sampled: 04/13/2010 1300
Date Received: 04/14/2010

Run	Prep Method	Analytical Method	Dilution	Analysis Date	Analyst	Prep Date	Batch
1	3520C	8270D	1	04/21/2010 2338	WD	04/15/2010 0015	31608

Parameter	CAS Number	Analytical Method	Result	Q	PQL	MDL	Units	Run
Acenaphthene	83-32-9	8270D	ND		1.0	0.092	ug/L	1
Acenaphthylene	208-96-8	8270D	ND		1.0	0.16	ug/L	1
Acetophenone	98-86-2	8270D	ND		1.0	0.33	ug/L	1
Anthracene	120-12-7	8270D	ND		1.0	0.13	ug/L	1
Atrazine	1912-24-9	8270D	ND		1.0	0.20	ug/L	1
Benzaldehyde	100-52-7	8270D	ND		5.1	1.0	ug/L	1
Benzo(a)anthracene	56-55-3	8270D	ND		1.0	0.15	ug/L	1
Benzo(a)pyrene	50-32-8	8270D	ND		1.0	0.16	ug/L	1
Benzo(b)fluoranthene	205-99-2	8270D	ND		1.0	0.20	ug/L	1
Benzo(g,h,i)perylene	191-24-2	8270D	ND		1.0	0.23	ug/L	1
Benzo(k)fluoranthene	207-08-9	8270D	ND		1.0	0.12	ug/L	1
1,1'-Biphenyl	92-52-4	8270D	ND		1.0	0.20	ug/L	1
4-Bromophenyl phenyl ether	101-55-3	8270D	ND		1.0	0.12	ug/L	1
Butyl benzyl phthalate	85-68-7	8270D	ND		5.1	1.7	ug/L	1
Caprolactam	105-60-2	8270D	ND		5.1	1.2	ug/L	1
Carbazole	86-74-8	8270D	ND		1.0	0.26	ug/L	1
4-Chloro-3-methyl phenol	59-50-7	8270D	ND		1.0	0.22	ug/L	1
4-Chloroaniline	106-47-8	8270D	ND		1.0	0.13	ug/L	1
bis(2-Chloroethoxy)methane	111-91-1	8270D	ND		1.0	0.13	ug/L	1
bis(2-Chloroethyl)ether	111-44-4	8270D	ND		1.0	0.13	ug/L	1
bis(2-Chloroisopropyl)ether	108-60-1	8270D	ND		1.0	0.082	ug/L	1
2-Chloronaphthalene	91-58-7	8270D	ND		1.0	0.12	ug/L	1
2-Chlorophenol	95-57-8	8270D	ND		1.0	0.13	ug/L	1
4-Chlorophenyl phenyl ether	7005-72-3	8270D	ND		1.0	0.11	ug/L	1
Chrysene	218-01-9	8270D	ND		1.0	0.12	ug/L	1
Dibenzo(a,h)anthracene	53-70-3	8270D	ND		1.0	0.13	ug/L	1
Dibenzofuran	132-64-9	8270D	ND		1.0	0.16	ug/L	1
3,3'-Dichlorobenzidine	91-94-1	8270D	ND		5.1	0.83	ug/L	1
2,4-Dichlorophenol	120-83-2	8270D	ND		1.0	0.15	ug/L	1
Diethylphthalate	84-66-2	8270D	ND		5.1	1.7	ug/L	1
Dimethyl phthalate	131-11-3	8270D	ND		5.1	1.7	ug/L	1
2,4-Dimethylphenol	105-67-9	8270D	ND		1.0	0.32	ug/L	1
Di-n-butyl phthalate	84-74-2	8270D	ND		5.1	1.7	ug/L	1
4,6-Dinitro-2-methylphenol	534-52-1	8270D	ND		5.1	1.5	ug/L	1
2,4-Dinitrophenol	51-28-5	8270D	ND		5.1	0.26	ug/L	1
2,4-Dinitrotoluene	121-14-2	8270D	ND		2.0	0.46	ug/L	1
2,6-Dinitrotoluene	606-20-2	8270D	ND		2.0	0.41	ug/L	1
Di-n-octylphthalate	117-84-0	8270D	ND		5.1	1.7	ug/L	1
bis(2-Ethylhexyl)phthalate	117-81-7	8270D	ND		5.1	1.7	ug/L	1
Fluoranthene	206-44-0	8270D	ND		1.0	0.21	ug/L	1
Fluorene	86-73-7	8270D	ND		1.0	0.10	ug/L	1
Hexachlorobenzene	118-74-1	8270D	ND		1.0	0.21	ug/L	1
Hexachlorobutadiene	87-68-3	8270D	ND		1.0	0.092	ug/L	1
Hexachlorocyclopentadiene	77-47-4	8270D	ND		5.1	0.23	ug/L	1

PQL = Practical quantitation limit
B = Detected in the method blank
E = Quantitation of compound exceeded the calibration range
ND = Not detected at or above the MDL
J = Estimated result < PQL and ≥ MDL
P = The RPD between two GC columns exceeds 40%
Where applicable, all soil sample analysis are reported on a dry weight basis unless flagged with a "W"
N = Recovery is out of criteria
H = Out of holding time

Semivolatile Organic Compounds by GC/MS

Client: ARCADIS U.S., Inc.
Laboratory ID: LD14020-008
Description: F39TW10 (30-35)
Matrix: Aqueous
Date Sampled: 04/13/2010 1300
Date Received: 04/14/2010

Run	Prep Method	Analytical Method	Dilution	Analysis Date	Analyst	Prep Date	Batch
1	3520C	8270D	1	04/21/2010 2338	WD	04/15/2010 0015	31608

Parameter	CAS Number	Analytical Method	Result	Q	PQL	MDL	Units	Run
Hexachloroethane	67-72-1	8270D	ND		1.0	0.11	ug/L	1
Indeno(1,2,3-c,d)pyrene	193-39-5	8270D	ND		1.0	0.23	ug/L	1
Isophorone	78-59-1	8270D	ND		1.0	0.082	ug/L	1
2-Methylnaphthalene	91-57-6	8270D	ND		1.0	0.082	ug/L	1
2-Methylphenol	95-48-7	8270D	ND		1.0	0.17	ug/L	1
3 & 4-Methylphenol	106-44-5	8270D	ND		2.0	0.58	ug/L	1
Naphthalene	91-20-3	8270D	ND		1.0	0.071	ug/L	1
2-Nitroaniline	88-74-4	8270D	ND		2.0	0.56	ug/L	1
3-Nitroaniline	99-09-2	8270D	ND		2.0	0.79	ug/L	1
4-Nitroaniline	100-01-6	8270D	ND		2.0	0.40	ug/L	1
Nitrobenzene	98-95-3	8270D	ND		1.0	0.10	ug/L	1
2-Nitrophenol	88-75-5	8270D	ND		2.0	0.28	ug/L	1
4-Nitrophenol	100-02-7	8270D	ND		5.1	0.65	ug/L	1
N-Nitrosodi-n-propylamine	621-64-7	8270D	ND		1.0	0.082	ug/L	1
N-Nitrosodiphenylamine (Diphenylamine)	86-30-6	8270D	ND		1.0	0.39	ug/L	1
Pentachlorophenol	87-86-5	8270D	ND		5.1	0.55	ug/L	1
Phenanthrene	85-01-8	8270D	ND		1.0	0.18	ug/L	1
Phenol	108-95-2	8270D	ND		1.0	0.11	ug/L	1
Pyrene	129-00-0	8270D	ND		1.0	0.16	ug/L	1
2,4,5-Trichlorophenol	95-95-4	8270D	ND		1.0	0.18	ug/L	1
2,4,6-Trichlorophenol	88-06-2	8270D	ND		1.0	0.22	ug/L	1

Surrogate	Q	Run 1 % Recovery	Acceptance Limits
2-Fluorobiphenyl		81	37-129
2-Fluorophenol		70	24-127
Nitrobenzene-d5		76	38-127
Phenol-d5		66	28-128
Terphenyl-d14		30	10-148
2,4,6-Tribromophenol		81	41-144

PQL = Practical quantitation limit
B = Detected in the method blank
E = Quantitation of compound exceeded the calibration range
ND = Not detected at or above the MDL
J = Estimated result < PQL and ≥ MDL
P = The RPD between two GC columns exceeds 40%
Where applicable, all soil sample analysis are reported on a dry weight basis unless flagged with a "W"
N = Recovery is out of criteria
H = Out of holding time

Volatile Organic Compounds by GC/MS

Client: ARCADIS U.S., Inc.
Laboratory ID: LD14020-009
Description: Trip Blank
Matrix: Aqueous
Date Sampled: 04/14/2010 0830
Date Received: 04/14/2010

Run	Prep Method	Analytical Method	Dilution	Analysis Date	Analyst	Prep Date	Batch
1	5030B	8260B	1	04/17/2010 0509	LBS		31703

Parameter	CAS Number	Analytical Method	Result	Q	PQL	MDL	Units	Run
Acetone	67-64-1	8260B	0.81	J	10	0.061	ug/L	1
Benzene	71-43-2	8260B	ND		0.50	0.027	ug/L	1
Bromodichloromethane	75-27-4	8260B	ND		0.50	0.17	ug/L	1
Bromoform	75-25-2	8260B	ND		0.50	0.010	ug/L	1
Bromomethane (Methyl bromide)	74-83-9	8260B	ND		0.50	0.20	ug/L	1
2-Butanone (MEK)	78-93-3	8260B	ND		10	2.0	ug/L	1
Carbon disulfide	75-15-0	8260B	ND		0.50	0.097	ug/L	1
Carbon tetrachloride	56-23-5	8260B	ND		0.50	0.085	ug/L	1
Chlorobenzene	108-90-7	8260B	ND		0.50	0.17	ug/L	1
Chloroethane	75-00-3	8260B	ND		0.50	0.17	ug/L	1
Chloroform	67-66-3	8260B	ND		0.50	0.17	ug/L	1
Chloromethane (Methyl chloride)	74-87-3	8260B	ND		0.50	0.17	ug/L	1
Cyclohexane	110-82-7	8260B	ND		0.50	0.30	ug/L	1
1,2-Dibromo-3-chloropropane (DBCP)	96-12-8	8260B	ND		0.50	0.069	ug/L	1
Dibromochloromethane	124-48-1	8260B	ND		0.50	0.17	ug/L	1
1,2-Dibromoethane (EDB)	106-93-4	8260B	ND		0.50	0.061	ug/L	1
1,3-Dichlorobenzene	541-73-1	8260B	ND		0.50	0.17	ug/L	1
1,2-Dichlorobenzene	95-50-1	8260B	ND		0.50	0.17	ug/L	1
1,4-Dichlorobenzene	106-46-7	8260B	ND		0.50	0.17	ug/L	1
Dichlorodifluoromethane	75-71-8	8260B	ND		0.50	0.071	ug/L	1
1,1-Dichloroethane	75-34-3	8260B	ND		0.50	0.054	ug/L	1
1,2-Dichloroethane	107-06-2	8260B	ND		0.50	0.023	ug/L	1
trans-1,2-Dichloroethene	156-60-5	8260B	ND		0.50	0.079	ug/L	1
1,1-Dichloroethene	75-35-4	8260B	ND		0.50	0.094	ug/L	1
cis-1,2-Dichloroethene	156-59-2	8260B	ND		0.50	0.087	ug/L	1
1,2-Dichloropropane	78-87-5	8260B	ND		0.50	0.081	ug/L	1
trans-1,3-Dichloropropene	10061-02-6	8260B	ND		0.50	0.18	ug/L	1
cis-1,3-Dichloropropene	10061-01-5	8260B	ND		0.50	0.090	ug/L	1
Ethylbenzene	100-41-4	8260B	ND		0.50	0.17	ug/L	1
2-Hexanone	591-78-6	8260B	ND		10	0.27	ug/L	1
Isopropylbenzene	98-82-8	8260B	ND		0.50	0.029	ug/L	1
Methyl acetate	79-20-9	8260B	ND		1.0	0.30	ug/L	1
Methyl tertiary butyl ether (MTBE)	1634-04-4	8260B	ND		0.50	0.019	ug/L	1
4-Methyl-2-pentanone	108-10-1	8260B	ND		10	0.31	ug/L	1
Methylcyclohexane	108-87-2	8260B	ND		5.0	0.95	ug/L	1
Methylene chloride	75-09-2	8260B	0.21	BJ	0.50	0.17	ug/L	1
Styrene	100-42-5	8260B	ND		0.50	0.015	ug/L	1
1,1,2,2-Tetrachloroethane	79-34-5	8260B	ND		0.50	0.013	ug/L	1
Tetrachloroethene	127-18-4	8260B	ND		0.50	0.014	ug/L	1
Toluene	108-88-3	8260B	ND		0.50	0.17	ug/L	1
1,1,2-Trichloro-1,2,2-Trifluoroethane	76-13-1	8260B	ND		0.50	0.30	ug/L	1
1,2,4-Trichlorobenzene	120-82-1	8260B	ND		0.50	0.17	ug/L	1
1,1,1-Trichloroethane	71-55-6	8260B	ND		0.50	0.029	ug/L	1
1,1,2-Trichloroethane	79-00-5	8260B	ND		0.50	0.031	ug/L	1

PQL = Practical quantitation limit
B = Detected in the method blank
E = Quantitation of compound exceeded the calibration range
ND = Not detected at or above the MDL
J = Estimated result < PQL and ≥ MDL
P = The RPD between two GC columns exceeds 40%
Where applicable, all soil sample analysis are reported on a dry weight basis unless flagged with a "W"
N = Recovery is out of criteria
H = Out of holding time

Volatile Organic Compounds by GC/MS

Client: ARCADIS U.S., Inc.
Laboratory ID: LD14020-009
Description: Trip Blank
Matrix: Aqueous
Date Sampled: 04/14/2010 0830
Date Received: 04/14/2010

Run	Prep Method	Analytical Method	Dilution	Analysis Date	Analyst	Prep Date	Batch
1	5030B	8260B	1	04/17/2010 0509	LBS		31703

Parameter	CAS Number	Analytical Method	Result	Q	PQL	MDL	Units	Run
Trichloroethene	79-01-6	8260B	ND		0.50	0.024	ug/L	1
Trichlorofluoromethane	75-69-4	8260B	ND		0.50	0.051	ug/L	1
Vinyl chloride	75-01-4	8260B	ND		0.50	0.065	ug/L	1
Xylenes (total)	1330-20-7	8260B	ND		0.50	0.17	ug/L	1

Surrogate	Q	Run 1 % Recovery	Acceptance Limits
1,2-Dichloroethane-d4		107	70-130
Bromofluorobenzene		92	70-130
Toluene-d8		107	70-130

PQL = Practical quantitation limit
B = Detected in the method blank
E = Quantitation of compound exceeded the calibration range
ND = Not detected at or above the MDL
J = Estimated result < PQL and ≥ MDL
P = The RPD between two GC columns exceeds 40%
Where applicable, all soil sample analysis are reported on a dry weight basis unless flagged with a "W"
N = Recovery is out of criteria
H = Out of holding time

Volatile Organic Compounds by GC/MS

Client: ARCADIS U.S., Inc.
Laboratory ID: LD14020-010
Description: F39TW11 (40-45)
Matrix: Aqueous
Date Sampled: 04/14/2010 0815
Date Received: 04/15/2010

Run	Prep Method	Analytical Method	Dilution	Analysis Date	Analyst	Prep Date	Batch
1	5030B	8260B	1	04/17/2010 0531	LBS		31703
2	5030B	8260B	10	04/19/2010 1759	DLB		31838

Parameter	CAS Number	Analytical Method	Result	Q	PQL	MDL	Units	Run
Acetone	67-64-1	8260B	10		10	0.061	ug/L	1
Benzene	71-43-2	8260B	0.66		0.50	0.027	ug/L	1
Bromodichloromethane	75-27-4	8260B	ND		0.50	0.17	ug/L	1
Bromoform	75-25-2	8260B	ND		0.50	0.010	ug/L	1
Bromomethane (Methyl bromide)	74-83-9	8260B	ND		0.50	0.20	ug/L	1
2-Butanone (MEK)	78-93-3	8260B	49		10	2.0	ug/L	1
Carbon disulfide	75-15-0	8260B	0.40	J	0.50	0.097	ug/L	1
Carbon tetrachloride	56-23-5	8260B	ND		0.50	0.085	ug/L	1
Chlorobenzene	108-90-7	8260B	ND		0.50	0.17	ug/L	1
Chloroethane	75-00-3	8260B	ND		0.50	0.17	ug/L	1
Chloroform	67-66-3	8260B	ND		0.50	0.17	ug/L	1
Chloromethane (Methyl chloride)	74-87-3	8260B	ND		0.50	0.17	ug/L	1
Cyclohexane	110-82-7	8260B	ND		0.50	0.30	ug/L	1
1,2-Dibromo-3-chloropropane (DBCP)	96-12-8	8260B	ND		0.50	0.069	ug/L	1
Dibromochloromethane	124-48-1	8260B	ND		0.50	0.17	ug/L	1
1,2-Dibromoethane (EDB)	106-93-4	8260B	ND		0.50	0.061	ug/L	1
1,3-Dichlorobenzene	541-73-1	8260B	ND		0.50	0.17	ug/L	1
1,2-Dichlorobenzene	95-50-1	8260B	ND		0.50	0.17	ug/L	1
1,4-Dichlorobenzene	106-46-7	8260B	ND		0.50	0.17	ug/L	1
Dichlorodifluoromethane	75-71-8	8260B	ND		0.50	0.071	ug/L	1
1,1-Dichloroethane	75-34-3	8260B	ND		0.50	0.054	ug/L	1
1,2-Dichloroethane	107-06-2	8260B	ND		0.50	0.023	ug/L	1
trans-1,2-Dichloroethene	156-60-5	8260B	1.7		0.50	0.079	ug/L	1
1,1-Dichloroethene	75-35-4	8260B	7.3		0.50	0.094	ug/L	1
cis-1,2-Dichloroethene	156-59-2	8260B	450		5.0	0.87	ug/L	2
1,2-Dichloropropane	78-87-5	8260B	ND		0.50	0.081	ug/L	1
trans-1,3-Dichloropropene	10061-02-6	8260B	ND		0.50	0.18	ug/L	1
cis-1,3-Dichloropropene	10061-01-5	8260B	ND		0.50	0.090	ug/L	1
Ethylbenzene	100-41-4	8260B	ND		0.50	0.17	ug/L	1
2-Hexanone	591-78-6	8260B	ND		10	0.27	ug/L	1
Isopropylbenzene	98-82-8	8260B	ND		0.50	0.029	ug/L	1
Methyl acetate	79-20-9	8260B	ND		1.0	0.30	ug/L	1
Methyl tertiary butyl ether (MTBE)	1634-04-4	8260B	ND		0.50	0.019	ug/L	1
4-Methyl-2-pentanone	108-10-1	8260B	ND		10	0.31	ug/L	1
Methylcyclohexane	108-87-2	8260B	ND		5.0	0.95	ug/L	1
Methylene chloride	75-09-2	8260B	0.20	BJ	0.50	0.17	ug/L	1
Styrene	100-42-5	8260B	ND		0.50	0.015	ug/L	1
1,1,2,2-Tetrachloroethane	79-34-5	8260B	ND		0.50	0.013	ug/L	1
Tetrachloroethene	127-18-4	8260B	140		0.50	0.014	ug/L	1
Toluene	108-88-3	8260B	0.39	J	0.50	0.17	ug/L	1
1,1,2-Trichloro-1,2,2-Trifluoroethane	76-13-1	8260B	ND		0.50	0.30	ug/L	1
1,2,4-Trichlorobenzene	120-82-1	8260B	ND		0.50	0.17	ug/L	1
1,1,1-Trichloroethane	71-55-6	8260B	ND		0.50	0.029	ug/L	1

PQL = Practical quantitation limit
B = Detected in the method blank
E = Quantitation of compound exceeded the calibration range
ND = Not detected at or above the MDL
J = Estimated result < PQL and ≥ MDL
P = The RPD between two GC columns exceeds 40%
Where applicable, all soil sample analysis are reported on a dry weight basis unless flagged with a "W"
N = Recovery is out of criteria
H = Out of holding time

Volatile Organic Compounds by GC/MS

Client: ARCADIS U.S., Inc.
Laboratory ID: LD14020-010
Description: F39TW11 (40-45)
Matrix: Aqueous
Date Sampled: 04/14/2010 0815
Date Received: 04/15/2010

Run	Prep Method	Analytical Method	Dilution	Analysis Date	Analyst	Prep Date	Batch
1	5030B	8260B	1	04/17/2010 0531	LBS		31703
2	5030B	8260B	10	04/19/2010 1759	DLB		31838

Parameter	CAS Number	Analytical Method	Result	Q	PQL	MDL	Units	Run
1,1,2-Trichloroethane	79-00-5	8260B	ND		0.50	0.031	ug/L	1
Trichloroethene	79-01-6	8260B	1300		5.0	0.24	ug/L	2
Trichlorofluoromethane	75-69-4	8260B	ND		0.50	0.051	ug/L	1
Vinyl chloride	75-01-4	8260B	0.60		0.50	0.065	ug/L	1
Xylenes (total)	1330-20-7	8260B	ND		0.50	0.17	ug/L	1

Surrogate	Q	Run 1 % Recovery	Acceptance Limits	Q	Run 2 % Recovery	Acceptance Limits
1,2-Dichloroethane-d4		107	70-130		96	70-130
Bromofluorobenzene		92	70-130		89	70-130
Toluene-d8		111	70-130		108	70-130

PQL = Practical quantitation limit
B = Detected in the method blank
E = Quantitation of compound exceeded the calibration range
ND = Not detected at or above the MDL
J = Estimated result < PQL and ≥ MDL
P = The RPD between two GC columns exceeds 40%
Where applicable, all soil sample analysis are reported on a dry weight basis unless flagged with a "W"
N = Recovery is out of criteria
H = Out of holding time

Semivolatile Organic Compounds by GC/MS

Client: ARCADIS U.S., Inc.
Laboratory ID: LD14020-010
Description: F39TW11 (40-45)
Matrix: Aqueous
Date Sampled: 04/14/2010 0815
Date Received: 04/15/2010

Run	Prep Method	Analytical Method	Dilution	Analysis Date	Analyst	Prep Date	Batch
1	3520C	8270D	1	04/23/2010 1434	JGH	04/16/2010 2032	31690
2	3520C	8270D	1	04/29/2010 1510	WD	04/26/2010 2104	32229

Parameter	CAS Number	Analytical Method	Result	Q	PQL	MDL	Units	Run
Acenaphthene	83-32-9	8270D	ND		1.0	0.092	ug/L	1
Acenaphthylene	208-96-8	8270D	ND		1.0	0.16	ug/L	1
Acetophenone	98-86-2	8270D	ND		1.0	0.33	ug/L	1
Anthracene	120-12-7	8270D	ND		1.0	0.13	ug/L	1
Atrazine	1912-24-9	8270D	ND		1.0	0.20	ug/L	1
Benzaldehyde	100-52-7	8270D	ND		5.1	1.0	ug/L	1
Benzo(a)anthracene	56-55-3	8270D	ND		1.0	0.15	ug/L	1
Benzo(a)pyrene	50-32-8	8270D	ND		1.0	0.16	ug/L	1
Benzo(b)fluoranthene	205-99-2	8270D	ND		1.0	0.20	ug/L	1
Benzo(g,h,i)perylene	191-24-2	8270D	ND		1.0	0.23	ug/L	1
Benzo(k)fluoranthene	207-08-9	8270D	ND		1.0	0.12	ug/L	1
1,1'-Biphenyl	92-52-4	8270D	ND		1.0	0.20	ug/L	1
4-Bromophenyl phenyl ether	101-55-3	8270D	ND		1.0	0.12	ug/L	1
Butyl benzyl phthalate	85-68-7	8270D	ND		5.1	1.7	ug/L	1
Caprolactam	105-60-2	8270D	ND		5.1	1.2	ug/L	1
Carbazole	86-74-8	8270D	ND		1.0	0.26	ug/L	1
4-Chloro-3-methyl phenol	59-50-7	8270D	ND		1.0	0.22	ug/L	1
4-Chloroaniline	106-47-8	8270D	ND		1.0	0.13	ug/L	1
bis(2-Chloroethoxy)methane	111-91-1	8270D	ND		1.0	0.13	ug/L	1
bis(2-Chloroethyl)ether	111-44-4	8270D	ND		1.0	0.13	ug/L	1
bis(2-Chloroisopropyl)ether	108-60-1	8270D	ND		1.0	0.082	ug/L	1
2-Chloronaphthalene	91-58-7	8270D	ND		1.0	0.12	ug/L	1
2-Chlorophenol	95-57-8	8270D	ND		1.0	0.13	ug/L	1
4-Chlorophenyl phenyl ether	7005-72-3	8270D	ND		1.0	0.11	ug/L	1
Chrysene	218-01-9	8270D	ND		1.0	0.12	ug/L	1
Dibenzo(a,h)anthracene	53-70-3	8270D	ND		1.0	0.13	ug/L	1
Dibenzofuran	132-64-9	8270D	ND		1.0	0.16	ug/L	1
3,3'-Dichlorobenzidine	91-94-1	8270D	ND		5.1	0.83	ug/L	1
2,4-Dichlorophenol	120-83-2	8270D	ND		1.0	0.15	ug/L	1
Diethylphthalate	84-66-2	8270D	ND		5.1	1.7	ug/L	1
Dimethyl phthalate	131-11-3	8270D	ND		5.1	1.7	ug/L	1
2,4-Dimethylphenol	105-67-9	8270D	ND		1.0	0.32	ug/L	1
Di-n-butyl phthalate	84-74-2	8270D	ND		5.1	1.7	ug/L	1
4,6-Dinitro-2-methylphenol	534-52-1	8270D	ND		5.1	1.5	ug/L	1
2,4-Dinitrophenol	51-28-5	8270D	ND		5.1	0.26	ug/L	1
2,4-Dinitrotoluene	121-14-2	8270D	ND		2.0	0.46	ug/L	1
2,6-Dinitrotoluene	606-20-2	8270D	ND		2.0	0.41	ug/L	1
Di-n-octylphthalate	117-84-0	8270D	ND		5.1	1.7	ug/L	1
bis(2-Ethylhexyl)phthalate	117-81-7	8270D	ND		5.1	1.7	ug/L	1
Fluoranthene	206-44-0	8270D	ND		1.0	0.21	ug/L	1
Fluorene	86-73-7	8270D	ND		1.0	0.10	ug/L	1
Hexachlorobenzene	118-74-1	8270D	ND		1.0	0.21	ug/L	1
Hexachlorobutadiene	87-68-3	8270D	ND		1.0	0.092	ug/L	1

PQL = Practical quantitation limit
B = Detected in the method blank
E = Quantitation of compound exceeded the calibration range
ND = Not detected at or above the MDL
J = Estimated result < PQL and ≥ MDL
P = The RPD between two GC columns exceeds 40%
Where applicable, all soil sample analysis are reported on a dry weight basis unless flagged with a "W"
N = Recovery is out of criteria
H = Out of holding time

Semivolatile Organic Compounds by GC/MS

Client: ARCADIS U.S., Inc.
Laboratory ID: LD14020-010
Description: F39TW11 (40-45)
Matrix: Aqueous
Date Sampled: 04/14/2010 0815
Date Received: 04/15/2010

Run	Prep Method	Analytical Method	Dilution	Analysis Date	Analyst	Prep Date	Batch
1	3520C	8270D	1	04/23/2010 1434	JGH	04/16/2010 2032	31690
2	3520C	8270D	1	04/29/2010 1510	WD	04/26/2010 2104	32229

Parameter	CAS Number	Analytical Method	Result	Q	PQL	MDL	Units	Run
Hexachlorocyclopentadiene	77-47-4	8270D	ND		5.1	0.23	ug/L	1
Hexachloroethane	67-72-1	8270D	ND		1.0	0.11	ug/L	1
Indeno(1,2,3-c,d)pyrene	193-39-5	8270D	ND		1.0	0.23	ug/L	1
Isophorone	78-59-1	8270D	ND		1.0	0.082	ug/L	1
2-Methylnaphthalene	91-57-6	8270D	ND		1.0	0.082	ug/L	1
2-Methylphenol	95-48-7	8270D	ND		1.0	0.17	ug/L	1
3 & 4-Methylphenol	106-44-5	8270D	ND		2.0	0.58	ug/L	1
Naphthalene	91-20-3	8270D	ND		1.0	0.071	ug/L	1
2-Nitroaniline	88-74-4	8270D	ND		2.0	0.56	ug/L	1
3-Nitroaniline	99-09-2	8270D	ND		2.0	0.79	ug/L	1
4-Nitroaniline	100-01-6	8270D	ND		2.0	0.40	ug/L	1
Nitrobenzene	98-95-3	8270D	ND		1.0	0.10	ug/L	1
2-Nitrophenol	88-75-5	8270D	ND		2.0	0.28	ug/L	1
4-Nitrophenol	100-02-7	8270D	ND		5.1	0.65	ug/L	1
N-Nitrosodi-n-propylamine	621-64-7	8270D	ND		1.0	0.082	ug/L	1
N-Nitrosodiphenylamine (Diphenylamine)	86-30-6	8270D	ND		1.0	0.39	ug/L	1
Pentachlorophenol	87-86-5	8270D	ND		5.1	0.55	ug/L	1
Phenanthrene	85-01-8	8270D	ND		1.0	0.18	ug/L	1
Phenol	108-95-2	8270D	ND		1.0	0.11	ug/L	1
Pyrene	129-00-0	8270D	ND		1.0	0.16	ug/L	1
2,4,5-Trichlorophenol	95-95-4	8270D	ND		1.0	0.18	ug/L	1
2,4,6-Trichlorophenol	88-06-2	8270D	ND		1.0	0.22	ug/L	1

Surrogate	Q	Run 1 % Recovery	Acceptance Limits	Q	Run 2 % Recovery	Acceptance Limits
2-Fluorobiphenyl		57	37-129	H	62	37-129
2-Fluorophenol		60	24-127	H	72	24-127
Nitrobenzene-d5	N	25	38-127	H	57	38-127
Phenol-d5		63	28-128	H	64	28-128
Terphenyl-d14		17	10-148	H	11	10-148
2,4,6-Tribromophenol		60	41-144	H	67	41-144

PQL = Practical quantitation limit
B = Detected in the method blank
E = Quantitation of compound exceeded the calibration range
ND = Not detected at or above the MDL
J = Estimated result < PQL and ≥ MDL
P = The RPD between two GC columns exceeds 40%
Where applicable, all soil sample analysis are reported on a dry weight basis unless flagged with a "W"
N = Recovery is out of criteria
H = Out of holding time

Semivolatile Organic Compounds by GC/MS

Client: ARCADIS U.S., Inc.
Laboratory ID: LD14020-010
Description: F39TW11 (40-45)
Matrix: Aqueous
Date Sampled: 04/14/2010 0815
Date Received: 04/15/2010

Run	Prep Method	Analytical Method	Dilution	Analysis Date	Analyst	Prep Date	Batch
1	3520C	8270D	1	04/23/2010 1434	JGH	04/16/2010 2032	31690
2	3520C	8270D	1	04/29/2010 1510	WD	04/26/2010 2104	32229

Parameter	CAS Number	Analytical Method	Result	Q	PQL	MDL	Units	Run
Acenaphthene	83-32-9	8270D	ND	H	1.0	0.092	ug/L	2
Acenaphthylene	208-96-8	8270D	ND	H	1.0	0.16	ug/L	2
Acetophenone	98-86-2	8270D	ND	H	1.0	0.33	ug/L	2
Anthracene	120-12-7	8270D	ND	H	1.0	0.13	ug/L	2
Atrazine	1912-24-9	8270D	ND	H	1.0	0.20	ug/L	2
Benzaldehyde	100-52-7	8270D	ND	H	5.1	1.0	ug/L	2
Benzo(a)anthracene	56-55-3	8270D	ND	H	1.0	0.15	ug/L	2
Benzo(a)pyrene	50-32-8	8270D	ND	H	1.0	0.16	ug/L	2
Benzo(b)fluoranthene	205-99-2	8270D	ND	H	1.0	0.20	ug/L	2
Benzo(g,h,i)perylene	191-24-2	8270D	ND	H	1.0	0.23	ug/L	2
Benzo(k)fluoranthene	207-08-9	8270D	ND	H	1.0	0.12	ug/L	2
1,1'-Biphenyl	92-52-4	8270D	ND	H	1.0	0.20	ug/L	2
4-Bromophenyl phenyl ether	101-55-3	8270D	ND	H	1.0	0.12	ug/L	2
Butyl benzyl phthalate	85-68-7	8270D	ND	H	5.1	1.7	ug/L	2
Caprolactam	105-60-2	8270D	ND	H	5.1	1.2	ug/L	2
Carbazole	86-74-8	8270D	ND	H	1.0	0.26	ug/L	2
4-Chloro-3-methyl phenol	59-50-7	8270D	ND	H	1.0	0.22	ug/L	2
4-Chloroaniline	106-47-8	8270D	ND	H	1.0	0.13	ug/L	2
bis(2-Chloroethoxy)methane	111-91-1	8270D	ND	H	1.0	0.13	ug/L	2
bis(2-Chloroethyl)ether	111-44-4	8270D	ND	H	1.0	0.13	ug/L	2
bis(2-Chloroisopropyl)ether	108-60-1	8270D	ND	H	1.0	0.082	ug/L	2
2-Chloronaphthalene	91-58-7	8270D	ND	H	1.0	0.12	ug/L	2
2-Chlorophenol	95-57-8	8270D	ND	H	1.0	0.13	ug/L	2
4-Chlorophenyl phenyl ether	7005-72-3	8270D	ND	H	1.0	0.11	ug/L	2
Chrysene	218-01-9	8270D	ND	H	1.0	0.12	ug/L	2
Dibenzo(a,h)anthracene	53-70-3	8270D	ND	H	1.0	0.13	ug/L	2
Dibenzofuran	132-64-9	8270D	ND	H	1.0	0.16	ug/L	2
3,3'-Dichlorobenzidine	91-94-1	8270D	ND	H	5.1	0.83	ug/L	2
2,4-Dichlorophenol	120-83-2	8270D	ND	H	1.0	0.15	ug/L	2
Diethylphthalate	84-66-2	8270D	ND	H	5.1	1.7	ug/L	2
Dimethyl phthalate	131-11-3	8270D	ND	H	5.1	1.7	ug/L	2
2,4-Dimethylphenol	105-67-9	8270D	ND	H	1.0	0.32	ug/L	2
Di-n-butyl phthalate	84-74-2	8270D	ND	H	5.1	1.7	ug/L	2
4,6-Dinitro-2-methylphenol	534-52-1	8270D	ND	H	5.1	1.5	ug/L	2
2,4-Dinitrophenol	51-28-5	8270D	ND	H	5.1	0.26	ug/L	2
2,4-Dinitrotoluene	121-14-2	8270D	ND	H	2.0	0.46	ug/L	2
2,6-Dinitrotoluene	606-20-2	8270D	ND	H	2.0	0.41	ug/L	2
Di-n-octylphthalate	117-84-0	8270D	ND	H	5.1	1.7	ug/L	2
bis(2-Ethylhexyl)phthalate	117-81-7	8270D	ND	H	5.1	1.7	ug/L	2
Fluoranthene	206-44-0	8270D	ND	H	1.0	0.21	ug/L	2
Fluorene	86-73-7	8270D	ND	H	1.0	0.10	ug/L	2
Hexachlorobenzene	118-74-1	8270D	ND	H	1.0	0.21	ug/L	2
Hexachlorobutadiene	87-68-3	8270D	ND	H	1.0	0.092	ug/L	2

PQL = Practical quantitation limit
B = Detected in the method blank
E = Quantitation of compound exceeded the calibration range
ND = Not detected at or above the MDL
J = Estimated result < PQL and ≥ MDL
P = The RPD between two GC columns exceeds 40%
Where applicable, all soil sample analysis are reported on a dry weight basis unless flagged with a "W"
N = Recovery is out of criteria
H = Out of holding time

Semivolatile Organic Compounds by GC/MS

Client: ARCADIS U.S., Inc.
Laboratory ID: LD14020-010
Description: F39TW11 (40-45)
Matrix: Aqueous
Date Sampled: 04/14/2010 0815
Date Received: 04/15/2010

Run	Prep Method	Analytical Method	Dilution	Analysis Date	Analyst	Prep Date	Batch
1	3520C	8270D	1	04/23/2010 1434	JGH	04/16/2010 2032	31690
2	3520C	8270D	1	04/29/2010 1510	WD	04/26/2010 2104	32229

Parameter	CAS Number	Analytical Method	Result	Q	PQL	MDL	Units	Run
Hexachlorocyclopentadiene	77-47-4	8270D	ND	H	5.1	0.23	ug/L	2
Hexachloroethane	67-72-1	8270D	ND	H	1.0	0.11	ug/L	2
Indeno(1,2,3-c,d)pyrene	193-39-5	8270D	ND	H	1.0	0.23	ug/L	2
Isophorone	78-59-1	8270D	ND	H	1.0	0.082	ug/L	2
2-Methylnaphthalene	91-57-6	8270D	ND	H	1.0	0.082	ug/L	2
2-Methylphenol	95-48-7	8270D	ND	H	1.0	0.17	ug/L	2
3 & 4-Methylphenol	106-44-5	8270D	ND	H	2.0	0.58	ug/L	2
Naphthalene	91-20-3	8270D	ND	H	1.0	0.071	ug/L	2
2-Nitroaniline	88-74-4	8270D	ND	H	2.0	0.56	ug/L	2
3-Nitroaniline	99-09-2	8270D	ND	H	2.0	0.79	ug/L	2
4-Nitroaniline	100-01-6	8270D	ND	H	2.0	0.40	ug/L	2
Nitrobenzene	98-95-3	8270D	ND	H	1.0	0.10	ug/L	2
2-Nitrophenol	88-75-5	8270D	ND	H	2.0	0.28	ug/L	2
4-Nitrophenol	100-02-7	8270D	ND	H	5.1	0.65	ug/L	2
N-Nitrosodi-n-propylamine	621-64-7	8270D	ND	H	1.0	0.082	ug/L	2
N-Nitrosodiphenylamine (Diphenylamine)	86-30-6	8270D	ND	H	1.0	0.39	ug/L	2
Pentachlorophenol	87-86-5	8270D	ND	H	5.1	0.55	ug/L	2
Phenanthrene	85-01-8	8270D	ND	H	1.0	0.18	ug/L	2
Phenol	108-95-2	8270D	ND	H	1.0	0.11	ug/L	2
Pyrene	129-00-0	8270D	ND	H	1.0	0.16	ug/L	2
2,4,5-Trichlorophenol	95-95-4	8270D	ND	H	1.0	0.18	ug/L	2
2,4,6-Trichlorophenol	88-06-2	8270D	ND	H	1.0	0.22	ug/L	2

Surrogate	Q	Run 1 % Recovery	Acceptance Limits	Q	Run 2 % Recovery	Acceptance Limits
2-Fluorobiphenyl		57	37-129	H	62	37-129
2-Fluorophenol		60	24-127	H	72	24-127
Nitrobenzene-d5	N	25	38-127	H	57	38-127
Phenol-d5		63	28-128	H	64	28-128
Terphenyl-d14		17	10-148	H	11	10-148
2,4,6-Tribromophenol		60	41-144	H	67	41-144

PQL = Practical quantitation limit
B = Detected in the method blank
E = Quantitation of compound exceeded the calibration range
ND = Not detected at or above the MDL
J = Estimated result < PQL and ≥ MDL
P = The RPD between two GC columns exceeds 40%
Where applicable, all soil sample analysis are reported on a dry weight basis unless flagged with a "W"
N = Recovery is out of criteria
H = Out of holding time

Volatile Organic Compounds by GC/MS

Client: ARCADIS U.S., Inc.
Laboratory ID: LD14020-011
Description: F39TW11 (10-15)
Matrix: Aqueous
Date Sampled: 04/14/2010 0845
Date Received: 04/15/2010

Run	Prep Method	Analytical Method	Dilution	Analysis Date	Analyst	Prep Date	Batch
1	5030B	8260B	1	04/17/2010 0553	LBS		31703
2	5030B	8260B	1	04/19/2010 1821	DLB		31838

Parameter	CAS Number	Analytical Method	Result	Q	PQL	MDL	Units	Run
Acetone	67-64-1	8260B	6.7	J	10	0.061	ug/L	1
Benzene	71-43-2	8260B	ND		0.50	0.027	ug/L	1
Bromodichloromethane	75-27-4	8260B	ND		0.50	0.17	ug/L	1
Bromoform	75-25-2	8260B	ND		0.50	0.010	ug/L	1
Bromomethane (Methyl bromide)	74-83-9	8260B	ND		0.50	0.20	ug/L	1
2-Butanone (MEK)	78-93-3	8260B	ND		10	2.0	ug/L	1
Carbon disulfide	75-15-0	8260B	0.34	J	0.50	0.097	ug/L	1
Carbon tetrachloride	56-23-5	8260B	ND		0.50	0.085	ug/L	1
Chlorobenzene	108-90-7	8260B	ND		0.50	0.17	ug/L	1
Chloroethane	75-00-3	8260B	ND		0.50	0.17	ug/L	1
Chloroform	67-66-3	8260B	ND		0.50	0.17	ug/L	1
Chloromethane (Methyl chloride)	74-87-3	8260B	ND		0.50	0.17	ug/L	1
Cyclohexane	110-82-7	8260B	ND		0.50	0.30	ug/L	1
1,2-Dibromo-3-chloropropane (DBCP)	96-12-8	8260B	ND		0.50	0.069	ug/L	1
Dibromochloromethane	124-48-1	8260B	ND		0.50	0.17	ug/L	1
1,2-Dibromoethane (EDB)	106-93-4	8260B	ND		0.50	0.061	ug/L	1
1,3-Dichlorobenzene	541-73-1	8260B	ND		0.50	0.17	ug/L	1
1,2-Dichlorobenzene	95-50-1	8260B	ND		0.50	0.17	ug/L	1
1,4-Dichlorobenzene	106-46-7	8260B	ND		0.50	0.17	ug/L	1
Dichlorodifluoromethane	75-71-8	8260B	ND		0.50	0.071	ug/L	1
1,1-Dichloroethane	75-34-3	8260B	ND		0.50	0.054	ug/L	1
1,2-Dichloroethane	107-06-2	8260B	ND		0.50	0.023	ug/L	1
trans-1,2-Dichloroethene	156-60-5	8260B	ND		0.50	0.079	ug/L	1
1,1-Dichloroethene	75-35-4	8260B	ND		0.50	0.094	ug/L	1
cis-1,2-Dichloroethene	156-59-2	8260B	ND		0.50	0.087	ug/L	1
1,2-Dichloropropane	78-87-5	8260B	ND		0.50	0.081	ug/L	1
trans-1,3-Dichloropropene	10061-02-6	8260B	ND		0.50	0.18	ug/L	1
cis-1,3-Dichloropropene	10061-01-5	8260B	ND		0.50	0.090	ug/L	1
Ethylbenzene	100-41-4	8260B	ND		0.50	0.17	ug/L	1
2-Hexanone	591-78-6	8260B	ND		10	0.27	ug/L	1
Isopropylbenzene	98-82-8	8260B	ND		0.50	0.029	ug/L	1
Methyl acetate	79-20-9	8260B	ND		1.0	0.30	ug/L	1
Methyl tertiary butyl ether (MTBE)	1634-04-4	8260B	ND		0.50	0.019	ug/L	1
4-Methyl-2-pentanone	108-10-1	8260B	ND		10	0.31	ug/L	1
Methylcyclohexane	108-87-2	8260B	ND		5.0	0.95	ug/L	1
Methylene chloride	75-09-2	8260B	0.22	BJ	0.50	0.17	ug/L	1
Styrene	100-42-5	8260B	ND		0.50	0.015	ug/L	1
1,1,2,2-Tetrachloroethane	79-34-5	8260B	ND		0.50	0.013	ug/L	1
Tetrachloroethene	127-18-4	8260B	ND		0.50	0.014	ug/L	1
Toluene	108-88-3	8260B	ND		0.50	0.17	ug/L	1
1,1,2-Trichloro-1,2,2-Trifluoroethane	76-13-1	8260B	ND		0.50	0.30	ug/L	1
1,2,4-Trichlorobenzene	120-82-1	8260B	ND		0.50	0.17	ug/L	1
1,1,1-Trichloroethane	71-55-6	8260B	ND		0.50	0.029	ug/L	1

PQL = Practical quantitation limit
B = Detected in the method blank
E = Quantitation of compound exceeded the calibration range
ND = Not detected at or above the MDL
J = Estimated result < PQL and ≥ MDL
P = The RPD between two GC columns exceeds 40%
Where applicable, all soil sample analysis are reported on a dry weight basis unless flagged with a "W"
N = Recovery is out of criteria
H = Out of holding time

Volatile Organic Compounds by GC/MS

Client: ARCADIS U.S., Inc.
Laboratory ID: LD14020-011
Description: F39TW11 (10-15)
Matrix: Aqueous
Date Sampled: 04/14/2010 0845
Date Received: 04/15/2010

Run	Prep Method	Analytical Method	Dilution	Analysis Date	Analyst	Prep Date	Batch
1	5030B	8260B	1	04/17/2010 0553	LBS		31703
2	5030B	8260B	1	04/19/2010 1821	DLB		31838

Parameter	CAS Number	Analytical Method	Result	Q	PQL	MDL	Units	Run
1,1,2-Trichloroethane	79-00-5	8260B	ND		0.50	0.031	ug/L	1
Trichloroethene	79-01-6	8260B	0.19	J	0.50	0.024	ug/L	2
Trichlorofluoromethane	75-69-4	8260B	ND		0.50	0.051	ug/L	1
Vinyl chloride	75-01-4	8260B	ND		0.50	0.065	ug/L	1
Xylenes (total)	1330-20-7	8260B	ND		0.50	0.17	ug/L	1

Surrogate	Q	Run 1 % Recovery	Acceptance Limits	Q	Run 2 % Recovery	Acceptance Limits
1,2-Dichloroethane-d4		108	70-130		97	70-130
Bromofluorobenzene		92	70-130		91	70-130
Toluene-d8		108	70-130		107	70-130

PQL = Practical quantitation limit
B = Detected in the method blank
E = Quantitation of compound exceeded the calibration range
ND = Not detected at or above the MDL
J = Estimated result < PQL and ≥ MDL
P = The RPD between two GC columns exceeds 40%
Where applicable, all soil sample analysis are reported on a dry weight basis unless flagged with a "W"
N = Recovery is out of criteria
H = Out of holding time

Semivolatile Organic Compounds by GC/MS

Client: ARCADIS U.S., Inc.
Laboratory ID: LD14020-011
Description: F39TW11 (10-15)
Matrix: Aqueous
Date Sampled: 04/14/2010 0845
Date Received: 04/15/2010

Run	Prep Method	Analytical Method	Dilution	Analysis Date	Analyst	Prep Date	Batch
1	3520C	8270D	1	04/22/2010 1316	WD	04/16/2010 2032	31690

Parameter	CAS Number	Analytical Method	Result	Q	PQL	MDL	Units	Run
Acenaphthene	83-32-9	8270D	ND		1.0	0.091	ug/L	1
Acenaphthylene	208-96-8	8270D	ND		1.0	0.16	ug/L	1
Acetophenone	98-86-2	8270D	ND		1.0	0.32	ug/L	1
Anthracene	120-12-7	8270D	ND		1.0	0.13	ug/L	1
Atrazine	1912-24-9	8270D	ND		1.0	0.20	ug/L	1
Benzaldehyde	100-52-7	8270D	ND		5.1	1.0	ug/L	1
Benzo(a)anthracene	56-55-3	8270D	ND		1.0	0.15	ug/L	1
Benzo(a)pyrene	50-32-8	8270D	ND		1.0	0.16	ug/L	1
Benzo(b)fluoranthene	205-99-2	8270D	ND		1.0	0.20	ug/L	1
Benzo(g,h,i)perylene	191-24-2	8270D	ND		1.0	0.23	ug/L	1
Benzo(k)fluoranthene	207-08-9	8270D	ND		1.0	0.12	ug/L	1
1,1'-Biphenyl	92-52-4	8270D	ND		1.0	0.20	ug/L	1
4-Bromophenyl phenyl ether	101-55-3	8270D	ND		1.0	0.12	ug/L	1
Butyl benzyl phthalate	85-68-7	8270D	ND		5.1	1.7	ug/L	1
Caprolactam	105-60-2	8270D	ND		5.1	1.2	ug/L	1
Carbazole	86-74-8	8270D	ND		1.0	0.25	ug/L	1
4-Chloro-3-methyl phenol	59-50-7	8270D	ND		1.0	0.22	ug/L	1
4-Chloroaniline	106-47-8	8270D	ND		1.0	0.13	ug/L	1
bis(2-Chloroethoxy)methane	111-91-1	8270D	ND		1.0	0.13	ug/L	1
bis(2-Chloroethyl)ether	111-44-4	8270D	ND		1.0	0.13	ug/L	1
bis(2-Chloroisopropyl)ether	108-60-1	8270D	ND		1.0	0.081	ug/L	1
2-Chloronaphthalene	91-58-7	8270D	ND		1.0	0.12	ug/L	1
2-Chlorophenol	95-57-8	8270D	ND		1.0	0.13	ug/L	1
4-Chlorophenyl phenyl ether	7005-72-3	8270D	ND		1.0	0.11	ug/L	1
Chrysene	218-01-9	8270D	ND		1.0	0.12	ug/L	1
Dibenzo(a,h)anthracene	53-70-3	8270D	ND		1.0	0.13	ug/L	1
Dibenzofuran	132-64-9	8270D	ND		1.0	0.16	ug/L	1
3,3'-Dichlorobenzidine	91-94-1	8270D	ND		5.1	0.82	ug/L	1
2,4-Dichlorophenol	120-83-2	8270D	ND		1.0	0.15	ug/L	1
Diethylphthalate	84-66-2	8270D	ND		5.1	1.7	ug/L	1
Dimethyl phthalate	131-11-3	8270D	ND		5.1	1.7	ug/L	1
2,4-Dimethylphenol	105-67-9	8270D	ND		1.0	0.31	ug/L	1
Di-n-butyl phthalate	84-74-2	8270D	ND		5.1	1.7	ug/L	1
4,6-Dinitro-2-methylphenol	534-52-1	8270D	ND		5.1	1.5	ug/L	1
2,4-Dinitrophenol	51-28-5	8270D	ND		5.1	0.25	ug/L	1
2,4-Dinitrotoluene	121-14-2	8270D	ND		2.0	0.45	ug/L	1
2,6-Dinitrotoluene	606-20-2	8270D	ND		2.0	0.40	ug/L	1
Di-n-octylphthalate	117-84-0	8270D	ND		5.1	1.7	ug/L	1
bis(2-Ethylhexyl)phthalate	117-81-7	8270D	ND		5.1	1.7	ug/L	1
Fluoranthene	206-44-0	8270D	ND		1.0	0.21	ug/L	1
Fluorene	86-73-7	8270D	ND		1.0	0.10	ug/L	1
Hexachlorobenzene	118-74-1	8270D	ND		1.0	0.21	ug/L	1
Hexachlorobutadiene	87-68-3	8270D	ND		1.0	0.091	ug/L	1
Hexachlorocyclopentadiene	77-47-4	8270D	ND		5.1	0.23	ug/L	1

PQL = Practical quantitation limit
B = Detected in the method blank
E = Quantitation of compound exceeded the calibration range
ND = Not detected at or above the MDL
J = Estimated result < PQL and ≥ MDL
P = The RPD between two GC columns exceeds 40%
Where applicable, all soil sample analysis are reported on a dry weight basis unless flagged with a "W"
N = Recovery is out of criteria
H = Out of holding time

Semivolatile Organic Compounds by GC/MS

Client: ARCADIS U.S., Inc.
Laboratory ID: LD14020-011
Description: F39TW11 (10-15)
Matrix: Aqueous
Date Sampled: 04/14/2010 0845
Date Received: 04/15/2010

Run	Prep Method	Analytical Method	Dilution	Analysis Date	Analyst	Prep Date	Batch
1	3520C	8270D	1	04/22/2010 1316	WD	04/16/2010 2032	31690

Parameter	CAS Number	Analytical Method	Result	Q	PQL	MDL	Units	Run
Hexachloroethane	67-72-1	8270D	ND		1.0	0.11	ug/L	1
Indeno(1,2,3-c,d)pyrene	193-39-5	8270D	ND		1.0	0.23	ug/L	1
Isophorone	78-59-1	8270D	ND		1.0	0.081	ug/L	1
2-Methylnaphthalene	91-57-6	8270D	ND		1.0	0.081	ug/L	1
2-Methylphenol	95-48-7	8270D	ND		1.0	0.17	ug/L	1
3 & 4-Methylphenol	106-44-5	8270D	ND		2.0	0.58	ug/L	1
Naphthalene	91-20-3	8270D	ND		1.0	0.071	ug/L	1
2-Nitroaniline	88-74-4	8270D	ND		2.0	0.56	ug/L	1
3-Nitroaniline	99-09-2	8270D	ND		2.0	0.78	ug/L	1
4-Nitroaniline	100-01-6	8270D	ND		2.0	0.39	ug/L	1
Nitrobenzene	98-95-3	8270D	ND		1.0	0.10	ug/L	1
2-Nitrophenol	88-75-5	8270D	ND		2.0	0.27	ug/L	1
4-Nitrophenol	100-02-7	8270D	ND		5.1	0.65	ug/L	1
N-Nitrosodi-n-propylamine	621-64-7	8270D	ND		1.0	0.081	ug/L	1
N-Nitrosodiphenylamine (Diphenylamine)	86-30-6	8270D	ND		1.0	0.38	ug/L	1
Pentachlorophenol	87-86-5	8270D	ND		5.1	0.55	ug/L	1
Phenanthrene	85-01-8	8270D	ND		1.0	0.18	ug/L	1
Phenol	108-95-2	8270D	ND		1.0	0.11	ug/L	1
Pyrene	129-00-0	8270D	ND		1.0	0.16	ug/L	1
2,4,5-Trichlorophenol	95-95-4	8270D	ND		1.0	0.18	ug/L	1
2,4,6-Trichlorophenol	88-06-2	8270D	ND		1.0	0.22	ug/L	1

Surrogate	Q	Run 1 % Recovery	Acceptance Limits
2-Fluorobiphenyl		81	37-129
2-Fluorophenol		66	24-127
Nitrobenzene-d5		78	38-127
Phenol-d5		82	28-128
Terphenyl-d14		37	10-148
2,4,6-Tribromophenol		83	41-144

PQL = Practical quantitation limit
B = Detected in the method blank
E = Quantitation of compound exceeded the calibration range
ND = Not detected at or above the MDL
J = Estimated result < PQL and ≥ MDL
P = The RPD between two GC columns exceeds 40%
Where applicable, all soil sample analysis are reported on a dry weight basis unless flagged with a "W"
N = Recovery is out of criteria
H = Out of holding time

Volatile Organic Compounds by GC/MS

Client: ARCADIS U.S., Inc.
Laboratory ID: LD14020-012
Description: F39TW11 (30-35)
Matrix: Aqueous
Date Sampled: 04/14/2010 1015
Date Received: 04/15/2010

Run	Prep Method	Analytical Method	Dilution	Analysis Date	Analyst	Prep Date	Batch
1	5030B	8260B	1	04/17/2010 0614	LBS		31703

Parameter	CAS Number	Analytical Method	Result	Q	PQL	MDL	Units	Run
Acetone	67-64-1	8260B	2.9	J	10	0.061	ug/L	1
Benzene	71-43-2	8260B	ND		0.50	0.027	ug/L	1
Bromodichloromethane	75-27-4	8260B	ND		0.50	0.17	ug/L	1
Bromoform	75-25-2	8260B	ND		0.50	0.010	ug/L	1
Bromomethane (Methyl bromide)	74-83-9	8260B	ND		0.50	0.20	ug/L	1
2-Butanone (MEK)	78-93-3	8260B	ND		10	2.0	ug/L	1
Carbon disulfide	75-15-0	8260B	0.46	J	0.50	0.097	ug/L	1
Carbon tetrachloride	56-23-5	8260B	ND		0.50	0.085	ug/L	1
Chlorobenzene	108-90-7	8260B	ND		0.50	0.17	ug/L	1
Chloroethane	75-00-3	8260B	ND		0.50	0.17	ug/L	1
Chloroform	67-66-3	8260B	ND		0.50	0.17	ug/L	1
Chloromethane (Methyl chloride)	74-87-3	8260B	0.26	J	0.50	0.17	ug/L	1
Cyclohexane	110-82-7	8260B	ND		0.50	0.30	ug/L	1
1,2-Dibromo-3-chloropropane (DBCP)	96-12-8	8260B	ND		0.50	0.069	ug/L	1
Dibromochloromethane	124-48-1	8260B	ND		0.50	0.17	ug/L	1
1,2-Dibromoethane (EDB)	106-93-4	8260B	ND		0.50	0.061	ug/L	1
1,3-Dichlorobenzene	541-73-1	8260B	ND		0.50	0.17	ug/L	1
1,2-Dichlorobenzene	95-50-1	8260B	ND		0.50	0.17	ug/L	1
1,4-Dichlorobenzene	106-46-7	8260B	ND		0.50	0.17	ug/L	1
Dichlorodifluoromethane	75-71-8	8260B	ND		0.50	0.071	ug/L	1
1,1-Dichloroethane	75-34-3	8260B	ND		0.50	0.054	ug/L	1
1,2-Dichloroethane	107-06-2	8260B	ND		0.50	0.023	ug/L	1
trans-1,2-Dichloroethene	156-60-5	8260B	4.1		0.50	0.079	ug/L	1
1,1-Dichloroethene	75-35-4	8260B	ND		0.50	0.094	ug/L	1
cis-1,2-Dichloroethene	156-59-2	8260B	14		0.50	0.087	ug/L	1
1,2-Dichloropropane	78-87-5	8260B	ND		0.50	0.081	ug/L	1
trans-1,3-Dichloropropene	10061-02-6	8260B	ND		0.50	0.18	ug/L	1
cis-1,3-Dichloropropene	10061-01-5	8260B	ND		0.50	0.090	ug/L	1
Ethylbenzene	100-41-4	8260B	ND		0.50	0.17	ug/L	1
2-Hexanone	591-78-6	8260B	ND		10	0.27	ug/L	1
Isopropylbenzene	98-82-8	8260B	ND		0.50	0.029	ug/L	1
Methyl acetate	79-20-9	8260B	ND		1.0	0.30	ug/L	1
Methyl tertiary butyl ether (MTBE)	1634-04-4	8260B	ND		0.50	0.019	ug/L	1
4-Methyl-2-pentanone	108-10-1	8260B	ND		10	0.31	ug/L	1
Methylcyclohexane	108-87-2	8260B	ND		5.0	0.95	ug/L	1
Methylene chloride	75-09-2	8260B	0.19	BJ	0.50	0.17	ug/L	1
Styrene	100-42-5	8260B	ND		0.50	0.015	ug/L	1
1,1,2,2-Tetrachloroethane	79-34-5	8260B	ND		0.50	0.013	ug/L	1
Tetrachloroethene	127-18-4	8260B	0.69		0.50	0.014	ug/L	1
Toluene	108-88-3	8260B	ND		0.50	0.17	ug/L	1
1,1,2-Trichloro-1,2,2-Trifluoroethane	76-13-1	8260B	ND		0.50	0.30	ug/L	1
1,2,4-Trichlorobenzene	120-82-1	8260B	ND		0.50	0.17	ug/L	1
1,1,1-Trichloroethane	71-55-6	8260B	ND		0.50	0.029	ug/L	1
1,1,2-Trichloroethane	79-00-5	8260B	ND		0.50	0.031	ug/L	1

PQL = Practical quantitation limit
B = Detected in the method blank
E = Quantitation of compound exceeded the calibration range
ND = Not detected at or above the MDL
J = Estimated result < PQL and ≥ MDL
P = The RPD between two GC columns exceeds 40%
Where applicable, all soil sample analysis are reported on a dry weight basis unless flagged with a "W"
N = Recovery is out of criteria
H = Out of holding time

Volatile Organic Compounds by GC/MS

Client: ARCADIS U.S., Inc.
Laboratory ID: LD14020-012
Description: F39TW11 (30-35)
Matrix: Aqueous
Date Sampled: 04/14/2010 1015
Date Received: 04/15/2010

Run	Prep Method	Analytical Method	Dilution	Analysis Date	Analyst	Prep Date	Batch
1	5030B	8260B	1	04/17/2010 0614	LBS		31703

Parameter	CAS Number	Analytical Method	Result	Q	PQL	MDL	Units	Run
Trichloroethene	79-01-6	8260B	8.8		0.50	0.024	ug/L	1
Trichlorofluoromethane	75-69-4	8260B	ND		0.50	0.051	ug/L	1
Vinyl chloride	75-01-4	8260B	ND		0.50	0.065	ug/L	1
Xylenes (total)	1330-20-7	8260B	ND		0.50	0.17	ug/L	1

Surrogate	Q	Run 1 % Recovery	Acceptance Limits
1,2-Dichloroethane-d4		107	70-130
Bromofluorobenzene		92	70-130
Toluene-d8		109	70-130

PQL = Practical quantitation limit
B = Detected in the method blank
E = Quantitation of compound exceeded the calibration range
ND = Not detected at or above the MDL
J = Estimated result < PQL and ≥ MDL
P = The RPD between two GC columns exceeds 40%
Where applicable, all soil sample analysis are reported on a dry weight basis unless flagged with a "W"
N = Recovery is out of criteria
H = Out of holding time

Semivolatile Organic Compounds by GC/MS

Client: ARCADIS U.S., Inc.
Laboratory ID: LD14020-012
Description: F39TW11 (30-35)
Matrix: Aqueous
Date Sampled: 04/14/2010 1015
Date Received: 04/15/2010

Run	Prep Method	Analytical Method	Dilution	Analysis Date	Analyst	Prep Date	Batch
1	3520C	8270D	1	04/22/2010 1335	WD	04/16/2010 2032	31690

Parameter	CAS Number	Analytical Method	Result	Q	PQL	MDL	Units	Run
Acenaphthene	83-32-9	8270D	ND		1.0	0.092	ug/L	1
Acenaphthylene	208-96-8	8270D	ND		1.0	0.16	ug/L	1
Acetophenone	98-86-2	8270D	ND		1.0	0.33	ug/L	1
Anthracene	120-12-7	8270D	ND		1.0	0.13	ug/L	1
Atrazine	1912-24-9	8270D	ND		1.0	0.20	ug/L	1
Benzaldehyde	100-52-7	8270D	ND		5.1	1.0	ug/L	1
Benzo(a)anthracene	56-55-3	8270D	ND		1.0	0.15	ug/L	1
Benzo(a)pyrene	50-32-8	8270D	ND		1.0	0.16	ug/L	1
Benzo(b)fluoranthene	205-99-2	8270D	ND		1.0	0.20	ug/L	1
Benzo(g,h,i)perylene	191-24-2	8270D	ND		1.0	0.23	ug/L	1
Benzo(k)fluoranthene	207-08-9	8270D	ND		1.0	0.12	ug/L	1
1,1'-Biphenyl	92-52-4	8270D	ND		1.0	0.20	ug/L	1
4-Bromophenyl phenyl ether	101-55-3	8270D	ND		1.0	0.12	ug/L	1
Butyl benzyl phthalate	85-68-7	8270D	ND		5.1	1.7	ug/L	1
Caprolactam	105-60-2	8270D	ND		5.1	1.2	ug/L	1
Carbazole	86-74-8	8270D	ND		1.0	0.26	ug/L	1
4-Chloro-3-methyl phenol	59-50-7	8270D	ND		1.0	0.22	ug/L	1
4-Chloroaniline	106-47-8	8270D	ND		1.0	0.13	ug/L	1
bis(2-Chloroethoxy)methane	111-91-1	8270D	ND		1.0	0.13	ug/L	1
bis(2-Chloroethyl)ether	111-44-4	8270D	ND		1.0	0.13	ug/L	1
bis(2-Chloroisopropyl)ether	108-60-1	8270D	ND		1.0	0.082	ug/L	1
2-Chloronaphthalene	91-58-7	8270D	ND		1.0	0.12	ug/L	1
2-Chlorophenol	95-57-8	8270D	ND		1.0	0.13	ug/L	1
4-Chlorophenyl phenyl ether	7005-72-3	8270D	ND		1.0	0.11	ug/L	1
Chrysene	218-01-9	8270D	ND		1.0	0.12	ug/L	1
Dibenzo(a,h)anthracene	53-70-3	8270D	ND		1.0	0.13	ug/L	1
Dibenzofuran	132-64-9	8270D	ND		1.0	0.16	ug/L	1
3,3'-Dichlorobenzidine	91-94-1	8270D	ND		5.1	0.83	ug/L	1
2,4-Dichlorophenol	120-83-2	8270D	ND		1.0	0.15	ug/L	1
Diethylphthalate	84-66-2	8270D	ND		5.1	1.7	ug/L	1
Dimethyl phthalate	131-11-3	8270D	ND		5.1	1.7	ug/L	1
2,4-Dimethylphenol	105-67-9	8270D	ND		1.0	0.32	ug/L	1
Di-n-butyl phthalate	84-74-2	8270D	ND		5.1	1.7	ug/L	1
4,6-Dinitro-2-methylphenol	534-52-1	8270D	ND		5.1	1.5	ug/L	1
2,4-Dinitrophenol	51-28-5	8270D	ND		5.1	0.26	ug/L	1
2,4-Dinitrotoluene	121-14-2	8270D	ND		2.0	0.46	ug/L	1
2,6-Dinitrotoluene	606-20-2	8270D	ND		2.0	0.41	ug/L	1
Di-n-octylphthalate	117-84-0	8270D	ND		5.1	1.7	ug/L	1
bis(2-Ethylhexyl)phthalate	117-81-7	8270D	ND		5.1	1.7	ug/L	1
Fluoranthene	206-44-0	8270D	ND		1.0	0.21	ug/L	1
Fluorene	86-73-7	8270D	ND		1.0	0.10	ug/L	1
Hexachlorobenzene	118-74-1	8270D	ND		1.0	0.21	ug/L	1
Hexachlorobutadiene	87-68-3	8270D	ND		1.0	0.092	ug/L	1
Hexachlorocyclopentadiene	77-47-4	8270D	ND		5.1	0.23	ug/L	1

PQL = Practical quantitation limit
B = Detected in the method blank
E = Quantitation of compound exceeded the calibration range
ND = Not detected at or above the MDL
J = Estimated result < PQL and ≥ MDL
P = The RPD between two GC columns exceeds 40%
Where applicable, all soil sample analysis are reported on a dry weight basis unless flagged with a "W"
N = Recovery is out of criteria
H = Out of holding time

Semivolatile Organic Compounds by GC/MS

Client: ARCADIS U.S., Inc.
Laboratory ID: LD14020-012
Description: F39TW11 (30-35)
Matrix: Aqueous
Date Sampled: 04/14/2010 1015
Date Received: 04/15/2010

Run	Prep Method	Analytical Method	Dilution	Analysis Date	Analyst	Prep Date	Batch
1	3520C	8270D	1	04/22/2010 1335	WD	04/16/2010 2032	31690

Parameter	CAS Number	Analytical Method	Result	Q	PQL	MDL	Units	Run
Hexachloroethane	67-72-1	8270D	ND		1.0	0.11	ug/L	1
Indeno(1,2,3-c,d)pyrene	193-39-5	8270D	ND		1.0	0.23	ug/L	1
Isophorone	78-59-1	8270D	ND		1.0	0.082	ug/L	1
2-Methylnaphthalene	91-57-6	8270D	ND		1.0	0.082	ug/L	1
2-Methylphenol	95-48-7	8270D	ND		1.0	0.17	ug/L	1
3 & 4-Methylphenol	106-44-5	8270D	ND		2.0	0.58	ug/L	1
Naphthalene	91-20-3	8270D	ND		1.0	0.071	ug/L	1
2-Nitroaniline	88-74-4	8270D	ND		2.0	0.56	ug/L	1
3-Nitroaniline	99-09-2	8270D	ND		2.0	0.79	ug/L	1
4-Nitroaniline	100-01-6	8270D	ND		2.0	0.40	ug/L	1
Nitrobenzene	98-95-3	8270D	ND		1.0	0.10	ug/L	1
2-Nitrophenol	88-75-5	8270D	ND		2.0	0.28	ug/L	1
4-Nitrophenol	100-02-7	8270D	ND		5.1	0.65	ug/L	1
N-Nitrosodi-n-propylamine	621-64-7	8270D	ND		1.0	0.082	ug/L	1
N-Nitrosodiphenylamine (Diphenylamine)	86-30-6	8270D	ND		1.0	0.39	ug/L	1
Pentachlorophenol	87-86-5	8270D	ND		5.1	0.55	ug/L	1
Phenanthrene	85-01-8	8270D	ND		1.0	0.18	ug/L	1
Phenol	108-95-2	8270D	ND		1.0	0.11	ug/L	1
Pyrene	129-00-0	8270D	ND		1.0	0.16	ug/L	1
2,4,5-Trichlorophenol	95-95-4	8270D	ND		1.0	0.18	ug/L	1
2,4,6-Trichlorophenol	88-06-2	8270D	ND		1.0	0.22	ug/L	1

Surrogate	Q	Run 1 % Recovery	Acceptance Limits
2-Fluorobiphenyl		75	37-129
2-Fluorophenol		69	24-127
Nitrobenzene-d5		77	38-127
Phenol-d5		82	28-128
Terphenyl-d14		31	10-148
2,4,6-Tribromophenol		75	41-144

PQL = Practical quantitation limit
B = Detected in the method blank
E = Quantitation of compound exceeded the calibration range
ND = Not detected at or above the MDL
J = Estimated result < PQL and ≥ MDL
P = The RPD between two GC columns exceeds 40%
Where applicable, all soil sample analysis are reported on a dry weight basis unless flagged with a "W"
N = Recovery is out of criteria
H = Out of holding time

Volatile Organic Compounds by GC/MS

Client: ARCADIS U.S., Inc.
Laboratory ID: LD14020-013
Description: F39TW11 (20-25)
Matrix: Aqueous
Date Sampled: 04/14/2010 1045
Date Received: 04/15/2010

Run	Prep Method	Analytical Method	Dilution	Analysis Date	Analyst	Prep Date	Batch
1	5030B	8260B	1	04/17/2010 0636	LBS		31703

Parameter	CAS Number	Analytical Method	Result	Q	PQL	MDL	Units	Run
Acetone	67-64-1	8260B	8.8	J	10	0.061	ug/L	1
Benzene	71-43-2	8260B	0.13	J	0.50	0.027	ug/L	1
Bromodichloromethane	75-27-4	8260B	ND		0.50	0.17	ug/L	1
Bromoform	75-25-2	8260B	ND		0.50	0.010	ug/L	1
Bromomethane (Methyl bromide)	74-83-9	8260B	ND		0.50	0.20	ug/L	1
2-Butanone (MEK)	78-93-3	8260B	ND		10	2.0	ug/L	1
Carbon disulfide	75-15-0	8260B	1.5		0.50	0.097	ug/L	1
Carbon tetrachloride	56-23-5	8260B	ND		0.50	0.085	ug/L	1
Chlorobenzene	108-90-7	8260B	ND		0.50	0.17	ug/L	1
Chloroethane	75-00-3	8260B	ND		0.50	0.17	ug/L	1
Chloroform	67-66-3	8260B	ND		0.50	0.17	ug/L	1
Chloromethane (Methyl chloride)	74-87-3	8260B	ND		0.50	0.17	ug/L	1
Cyclohexane	110-82-7	8260B	ND		0.50	0.30	ug/L	1
1,2-Dibromo-3-chloropropane (DBCP)	96-12-8	8260B	ND		0.50	0.069	ug/L	1
Dibromochloromethane	124-48-1	8260B	ND		0.50	0.17	ug/L	1
1,2-Dibromoethane (EDB)	106-93-4	8260B	ND		0.50	0.061	ug/L	1
1,3-Dichlorobenzene	541-73-1	8260B	ND		0.50	0.17	ug/L	1
1,2-Dichlorobenzene	95-50-1	8260B	ND		0.50	0.17	ug/L	1
1,4-Dichlorobenzene	106-46-7	8260B	ND		0.50	0.17	ug/L	1
Dichlorodifluoromethane	75-71-8	8260B	ND		0.50	0.071	ug/L	1
1,1-Dichloroethane	75-34-3	8260B	ND		0.50	0.054	ug/L	1
1,2-Dichloroethane	107-06-2	8260B	ND		0.50	0.023	ug/L	1
trans-1,2-Dichloroethene	156-60-5	8260B	ND		0.50	0.079	ug/L	1
1,1-Dichloroethene	75-35-4	8260B	ND		0.50	0.094	ug/L	1
cis-1,2-Dichloroethene	156-59-2	8260B	ND		0.50	0.087	ug/L	1
1,2-Dichloropropane	78-87-5	8260B	ND		0.50	0.081	ug/L	1
trans-1,3-Dichloropropene	10061-02-6	8260B	ND		0.50	0.18	ug/L	1
cis-1,3-Dichloropropene	10061-01-5	8260B	ND		0.50	0.090	ug/L	1
Ethylbenzene	100-41-4	8260B	ND		0.50	0.17	ug/L	1
2-Hexanone	591-78-6	8260B	ND		10	0.27	ug/L	1
Isopropylbenzene	98-82-8	8260B	ND		0.50	0.029	ug/L	1
Methyl acetate	79-20-9	8260B	ND		1.0	0.30	ug/L	1
Methyl tertiary butyl ether (MTBE)	1634-04-4	8260B	ND		0.50	0.019	ug/L	1
4-Methyl-2-pentanone	108-10-1	8260B	ND		10	0.31	ug/L	1
Methylcyclohexane	108-87-2	8260B	ND		5.0	0.95	ug/L	1
Methylene chloride	75-09-2	8260B	0.20	BJ	0.50	0.17	ug/L	1
Styrene	100-42-5	8260B	ND		0.50	0.015	ug/L	1
1,1,2,2-Tetrachloroethane	79-34-5	8260B	ND		0.50	0.013	ug/L	1
Tetrachloroethene	127-18-4	8260B	ND		0.50	0.014	ug/L	1
Toluene	108-88-3	8260B	0.17	J	0.50	0.17	ug/L	1
1,1,2-Trichloro-1,2,2-Trifluoroethane	76-13-1	8260B	ND		0.50	0.30	ug/L	1
1,2,4-Trichlorobenzene	120-82-1	8260B	ND		0.50	0.17	ug/L	1
1,1,1-Trichloroethane	71-55-6	8260B	ND		0.50	0.029	ug/L	1
1,1,2-Trichloroethane	79-00-5	8260B	ND		0.50	0.031	ug/L	1

PQL = Practical quantitation limit
B = Detected in the method blank
E = Quantitation of compound exceeded the calibration range
ND = Not detected at or above the MDL
J = Estimated result < PQL and ≥ MDL
P = The RPD between two GC columns exceeds 40%
Where applicable, all soil sample analysis are reported on a dry weight basis unless flagged with a "W"
N = Recovery is out of criteria
H = Out of holding time

Volatile Organic Compounds by GC/MS

Client: ARCADIS U.S., Inc.
Laboratory ID: LD14020-013
Description: F39TW11 (20-25)
Matrix: Aqueous
Date Sampled: 04/14/2010 1045
Date Received: 04/15/2010

Run	Prep Method	Analytical Method	Dilution	Analysis Date	Analyst	Prep Date	Batch
1	5030B	8260B	1	04/17/2010 0636	LBS		31703

Parameter	CAS Number	Analytical Method	Result	Q	PQL	MDL	Units	Run
Trichloroethene	79-01-6	8260B	0.12	J	0.50	0.024	ug/L	1
Trichlorofluoromethane	75-69-4	8260B	ND		0.50	0.051	ug/L	1
Vinyl chloride	75-01-4	8260B	ND		0.50	0.065	ug/L	1
Xylenes (total)	1330-20-7	8260B	ND		0.50	0.17	ug/L	1

Surrogate	Q	Run 1 % Recovery	Acceptance Limits
1,2-Dichloroethane-d4		110	70-130
Bromofluorobenzene		94	70-130
Toluene-d8		110	70-130

PQL = Practical quantitation limit
B = Detected in the method blank
E = Quantitation of compound exceeded the calibration range
ND = Not detected at or above the MDL
J = Estimated result < PQL and ≥ MDL
P = The RPD between two GC columns exceeds 40%
Where applicable, all soil sample analysis are reported on a dry weight basis unless flagged with a "W"
N = Recovery is out of criteria
H = Out of holding time

Semivolatile Organic Compounds by GC/MS

Client: ARCADIS U.S., Inc.
Laboratory ID: LD14020-013
Description: F39TW11 (20-25)
Matrix: Aqueous
Date Sampled: 04/14/2010 1045
Date Received: 04/15/2010

Run	Prep Method	Analytical Method	Dilution	Analysis Date	Analyst	Prep Date	Batch
1	3520C	8270D	1	04/22/2010 1354	WD	04/16/2010 2032	31690

Parameter	CAS Number	Analytical Method	Result	Q	PQL	MDL	Units	Run
Acenaphthene	83-32-9	8270D	ND		1.0	0.091	ug/L	1
Acenaphthylene	208-96-8	8270D	ND		1.0	0.16	ug/L	1
Acetophenone	98-86-2	8270D	ND		1.0	0.32	ug/L	1
Anthracene	120-12-7	8270D	ND		1.0	0.13	ug/L	1
Atrazine	1912-24-9	8270D	ND		1.0	0.20	ug/L	1
Benzaldehyde	100-52-7	8270D	ND		5.1	1.0	ug/L	1
Benzo(a)anthracene	56-55-3	8270D	ND		1.0	0.15	ug/L	1
Benzo(a)pyrene	50-32-8	8270D	ND		1.0	0.16	ug/L	1
Benzo(b)fluoranthene	205-99-2	8270D	ND		1.0	0.20	ug/L	1
Benzo(g,h,i)perylene	191-24-2	8270D	ND		1.0	0.23	ug/L	1
Benzo(k)fluoranthene	207-08-9	8270D	ND		1.0	0.12	ug/L	1
1,1'-Biphenyl	92-52-4	8270D	ND		1.0	0.20	ug/L	1
4-Bromophenyl phenyl ether	101-55-3	8270D	ND		1.0	0.12	ug/L	1
Butyl benzyl phthalate	85-68-7	8270D	ND		5.1	1.7	ug/L	1
Caprolactam	105-60-2	8270D	ND		5.1	1.2	ug/L	1
Carbazole	86-74-8	8270D	ND		1.0	0.25	ug/L	1
4-Chloro-3-methyl phenol	59-50-7	8270D	ND		1.0	0.22	ug/L	1
4-Chloroaniline	106-47-8	8270D	ND		1.0	0.13	ug/L	1
bis(2-Chloroethoxy)methane	111-91-1	8270D	ND		1.0	0.13	ug/L	1
bis(2-Chloroethyl)ether	111-44-4	8270D	ND		1.0	0.13	ug/L	1
bis(2-Chloroisopropyl)ether	108-60-1	8270D	ND		1.0	0.081	ug/L	1
2-Chloronaphthalene	91-58-7	8270D	ND		1.0	0.12	ug/L	1
2-Chlorophenol	95-57-8	8270D	ND		1.0	0.13	ug/L	1
4-Chlorophenyl phenyl ether	7005-72-3	8270D	ND		1.0	0.11	ug/L	1
Chrysene	218-01-9	8270D	ND		1.0	0.12	ug/L	1
Dibenzo(a,h)anthracene	53-70-3	8270D	ND		1.0	0.13	ug/L	1
Dibenzofuran	132-64-9	8270D	ND		1.0	0.16	ug/L	1
3,3'-Dichlorobenzidine	91-94-1	8270D	ND		5.1	0.82	ug/L	1
2,4-Dichlorophenol	120-83-2	8270D	ND		1.0	0.15	ug/L	1
Diethylphthalate	84-66-2	8270D	ND		5.1	1.7	ug/L	1
Dimethyl phthalate	131-11-3	8270D	ND		5.1	1.7	ug/L	1
2,4-Dimethylphenol	105-67-9	8270D	ND		1.0	0.31	ug/L	1
Di-n-butyl phthalate	84-74-2	8270D	ND		5.1	1.7	ug/L	1
4,6-Dinitro-2-methylphenol	534-52-1	8270D	ND		5.1	1.5	ug/L	1
2,4-Dinitrophenol	51-28-5	8270D	ND		5.1	0.25	ug/L	1
2,4-Dinitrotoluene	121-14-2	8270D	ND		2.0	0.45	ug/L	1
2,6-Dinitrotoluene	606-20-2	8270D	ND		2.0	0.40	ug/L	1
Di-n-octylphthalate	117-84-0	8270D	ND		5.1	1.7	ug/L	1
bis(2-Ethylhexyl)phthalate	117-81-7	8270D	ND		5.1	1.7	ug/L	1
Fluoranthene	206-44-0	8270D	ND		1.0	0.21	ug/L	1
Fluorene	86-73-7	8270D	ND		1.0	0.10	ug/L	1
Hexachlorobenzene	118-74-1	8270D	ND		1.0	0.21	ug/L	1
Hexachlorobutadiene	87-68-3	8270D	ND		1.0	0.091	ug/L	1
Hexachlorocyclopentadiene	77-47-4	8270D	ND		5.1	0.23	ug/L	1

PQL = Practical quantitation limit
B = Detected in the method blank
E = Quantitation of compound exceeded the calibration range
ND = Not detected at or above the MDL
J = Estimated result < PQL and ≥ MDL
P = The RPD between two GC columns exceeds 40%
Where applicable, all soil sample analysis are reported on a dry weight basis unless flagged with a "W"
N = Recovery is out of criteria
H = Out of holding time

Semivolatile Organic Compounds by GC/MS

Client: ARCADIS U.S., Inc.
Laboratory ID: LD14020-013
Description: F39TW11 (20-25)
Matrix: Aqueous
Date Sampled: 04/14/2010 1045
Date Received: 04/15/2010

Run	Prep Method	Analytical Method	Dilution	Analysis Date	Analyst	Prep Date	Batch
1	3520C	8270D	1	04/22/2010 1354	WD	04/16/2010 2032	31690

Parameter	CAS Number	Analytical Method	Result	Q	PQL	MDL	Units	Run
Hexachloroethane	67-72-1	8270D	ND		1.0	0.11	ug/L	1
Indeno(1,2,3-c,d)pyrene	193-39-5	8270D	ND		1.0	0.23	ug/L	1
Isophorone	78-59-1	8270D	ND		1.0	0.081	ug/L	1
2-Methylnaphthalene	91-57-6	8270D	ND		1.0	0.081	ug/L	1
2-Methylphenol	95-48-7	8270D	ND		1.0	0.17	ug/L	1
3 & 4-Methylphenol	106-44-5	8270D	ND		2.0	0.58	ug/L	1
Naphthalene	91-20-3	8270D	ND		1.0	0.071	ug/L	1
2-Nitroaniline	88-74-4	8270D	ND		2.0	0.56	ug/L	1
3-Nitroaniline	99-09-2	8270D	ND		2.0	0.78	ug/L	1
4-Nitroaniline	100-01-6	8270D	ND		2.0	0.39	ug/L	1
Nitrobenzene	98-95-3	8270D	ND		1.0	0.10	ug/L	1
2-Nitrophenol	88-75-5	8270D	ND		2.0	0.27	ug/L	1
4-Nitrophenol	100-02-7	8270D	ND		5.1	0.65	ug/L	1
N-Nitrosodi-n-propylamine	621-64-7	8270D	ND		1.0	0.081	ug/L	1
N-Nitrosodiphenylamine (Diphenylamine)	86-30-6	8270D	ND		1.0	0.38	ug/L	1
Pentachlorophenol	87-86-5	8270D	ND		5.1	0.55	ug/L	1
Phenanthrene	85-01-8	8270D	ND		1.0	0.18	ug/L	1
Phenol	108-95-2	8270D	1.2		1.0	0.11	ug/L	1
Pyrene	129-00-0	8270D	ND		1.0	0.16	ug/L	1
2,4,5-Trichlorophenol	95-95-4	8270D	ND		1.0	0.18	ug/L	1
2,4,6-Trichlorophenol	88-06-2	8270D	ND		1.0	0.22	ug/L	1

Surrogate	Q	Run 1 % Recovery	Acceptance Limits
2-Fluorobiphenyl		65	37-129
2-Fluorophenol		70	24-127
Nitrobenzene-d5		52	38-127
Phenol-d5		74	28-128
Terphenyl-d14		21	10-148
2,4,6-Tribromophenol		73	41-144

PQL = Practical quantitation limit
B = Detected in the method blank
E = Quantitation of compound exceeded the calibration range
ND = Not detected at or above the MDL
J = Estimated result < PQL and ≥ MDL
P = The RPD between two GC columns exceeds 40%
Where applicable, all soil sample analysis are reported on a dry weight basis unless flagged with a "W"
N = Recovery is out of criteria
H = Out of holding time

Volatile Organic Compounds by GC/MS

Client: ARCADIS U.S., Inc.
Laboratory ID: LD14020-014
Description: Trip Blank
Matrix: Aqueous
Date Sampled: 04/15/2010 0830
Date Received: 04/15/2010

Run	Prep Method	Analytical Method	Dilution	Analysis Date	Analyst	Prep Date	Batch
1	5030B	8260B	1	04/17/2010 0657	LBS		31703

Parameter	CAS Number	Analytical Method	Result	Q	PQL	MDL	Units	Run
Acetone	67-64-1	8260B	1.2	J	10	0.061	ug/L	1
Benzene	71-43-2	8260B	ND		0.50	0.027	ug/L	1
Bromodichloromethane	75-27-4	8260B	ND		0.50	0.17	ug/L	1
Bromoform	75-25-2	8260B	ND		0.50	0.010	ug/L	1
Bromomethane (Methyl bromide)	74-83-9	8260B	ND		0.50	0.20	ug/L	1
2-Butanone (MEK)	78-93-3	8260B	ND		10	2.0	ug/L	1
Carbon disulfide	75-15-0	8260B	ND		0.50	0.097	ug/L	1
Carbon tetrachloride	56-23-5	8260B	ND		0.50	0.085	ug/L	1
Chlorobenzene	108-90-7	8260B	ND		0.50	0.17	ug/L	1
Chloroethane	75-00-3	8260B	ND		0.50	0.17	ug/L	1
Chloroform	67-66-3	8260B	ND		0.50	0.17	ug/L	1
Chloromethane (Methyl chloride)	74-87-3	8260B	ND		0.50	0.17	ug/L	1
Cyclohexane	110-82-7	8260B	ND		0.50	0.30	ug/L	1
1,2-Dibromo-3-chloropropane (DBCP)	96-12-8	8260B	ND		0.50	0.069	ug/L	1
Dibromochloromethane	124-48-1	8260B	ND		0.50	0.17	ug/L	1
1,2-Dibromoethane (EDB)	106-93-4	8260B	ND		0.50	0.061	ug/L	1
1,3-Dichlorobenzene	541-73-1	8260B	ND		0.50	0.17	ug/L	1
1,2-Dichlorobenzene	95-50-1	8260B	ND		0.50	0.17	ug/L	1
1,4-Dichlorobenzene	106-46-7	8260B	ND		0.50	0.17	ug/L	1
Dichlorodifluoromethane	75-71-8	8260B	ND		0.50	0.071	ug/L	1
1,1-Dichloroethane	75-34-3	8260B	ND		0.50	0.054	ug/L	1
1,2-Dichloroethane	107-06-2	8260B	ND		0.50	0.023	ug/L	1
trans-1,2-Dichloroethene	156-60-5	8260B	ND		0.50	0.079	ug/L	1
1,1-Dichloroethene	75-35-4	8260B	ND		0.50	0.094	ug/L	1
cis-1,2-Dichloroethene	156-59-2	8260B	ND		0.50	0.087	ug/L	1
1,2-Dichloropropane	78-87-5	8260B	ND		0.50	0.081	ug/L	1
trans-1,3-Dichloropropene	10061-02-6	8260B	ND		0.50	0.18	ug/L	1
cis-1,3-Dichloropropene	10061-01-5	8260B	ND		0.50	0.090	ug/L	1
Ethylbenzene	100-41-4	8260B	ND		0.50	0.17	ug/L	1
2-Hexanone	591-78-6	8260B	ND		10	0.27	ug/L	1
Isopropylbenzene	98-82-8	8260B	ND		0.50	0.029	ug/L	1
Methyl acetate	79-20-9	8260B	ND		1.0	0.30	ug/L	1
Methyl tertiary butyl ether (MTBE)	1634-04-4	8260B	ND		0.50	0.019	ug/L	1
4-Methyl-2-pentanone	108-10-1	8260B	ND		10	0.31	ug/L	1
Methylcyclohexane	108-87-2	8260B	ND		5.0	0.95	ug/L	1
Methylene chloride	75-09-2	8260B	0.22	BJ	0.50	0.17	ug/L	1
Styrene	100-42-5	8260B	ND		0.50	0.015	ug/L	1
1,1,2,2-Tetrachloroethane	79-34-5	8260B	ND		0.50	0.013	ug/L	1
Tetrachloroethene	127-18-4	8260B	ND		0.50	0.014	ug/L	1
Toluene	108-88-3	8260B	ND		0.50	0.17	ug/L	1
1,1,2-Trichloro-1,2,2-Trifluoroethane	76-13-1	8260B	ND		0.50	0.30	ug/L	1
1,2,4-Trichlorobenzene	120-82-1	8260B	ND		0.50	0.17	ug/L	1
1,1,1-Trichloroethane	71-55-6	8260B	ND		0.50	0.029	ug/L	1
1,1,2-Trichloroethane	79-00-5	8260B	ND		0.50	0.031	ug/L	1

PQL = Practical quantitation limit
B = Detected in the method blank
E = Quantitation of compound exceeded the calibration range
ND = Not detected at or above the MDL
J = Estimated result < PQL and ≥ MDL
P = The RPD between two GC columns exceeds 40%
Where applicable, all soil sample analysis are reported on a dry weight basis unless flagged with a "W"
N = Recovery is out of criteria
H = Out of holding time

Volatile Organic Compounds by GC/MS

Client: ARCADIS U.S., Inc.
Laboratory ID: LD14020-014
Description: Trip Blank
Matrix: Aqueous
Date Sampled: 04/15/2010 0830
Date Received: 04/15/2010

Run	Prep Method	Analytical Method	Dilution	Analysis Date	Analyst	Prep Date	Batch
1	5030B	8260B	1	04/17/2010 0657	LBS		31703

Parameter	CAS Number	Analytical Method	Result	Q	PQL	MDL	Units	Run
Trichloroethene	79-01-6	8260B	ND		0.50	0.024	ug/L	1
Trichlorofluoromethane	75-69-4	8260B	ND		0.50	0.051	ug/L	1
Vinyl chloride	75-01-4	8260B	ND		0.50	0.065	ug/L	1
Xylenes (total)	1330-20-7	8260B	ND		0.50	0.17	ug/L	1

Surrogate	Q	Run 1 % Recovery	Acceptance Limits
1,2-Dichloroethane-d4		111	70-130
Bromofluorobenzene		94	70-130
Toluene-d8		110	70-130

PQL = Practical quantitation limit
B = Detected in the method blank
E = Quantitation of compound exceeded the calibration range
ND = Not detected at or above the MDL
J = Estimated result < PQL and ≥ MDL
P = The RPD between two GC columns exceeds 40%
Where applicable, all soil sample analysis are reported on a dry weight basis unless flagged with a "W"
N = Recovery is out of criteria
H = Out of holding time

Volatile Organic Compounds by GC/MS

Client: ARCADIS U.S., Inc.
Laboratory ID: LD14020-015
Description: F39TW12 (10-15)
Matrix: Aqueous
Date Sampled: 04/14/2010 1700
Date Received: 04/17/2010

Run	Prep Method	Analytical Method	Dilution	Analysis Date	Analyst	Prep Date	Batch
1	5030B	8260B	1	04/22/2010 0207	DLB		31987

Parameter	CAS Number	Analytical Method	Result	Q	PQL	MDL	Units	Run
Acetone	67-64-1	8260B	3.6	BJ	10	0.061	ug/L	1
Benzene	71-43-2	8260B	0.19	J	0.50	0.027	ug/L	1
Bromodichloromethane	75-27-4	8260B	ND		0.50	0.17	ug/L	1
Bromoform	75-25-2	8260B	ND		0.50	0.010	ug/L	1
Bromomethane (Methyl bromide)	74-83-9	8260B	ND		0.50	0.20	ug/L	1
2-Butanone (MEK)	78-93-3	8260B	ND		10	2.0	ug/L	1
Carbon disulfide	75-15-0	8260B	0.24	J	0.50	0.097	ug/L	1
Carbon tetrachloride	56-23-5	8260B	ND		0.50	0.085	ug/L	1
Chlorobenzene	108-90-7	8260B	ND		0.50	0.17	ug/L	1
Chloroethane	75-00-3	8260B	ND		0.50	0.17	ug/L	1
Chloroform	67-66-3	8260B	ND		0.50	0.17	ug/L	1
Chloromethane (Methyl chloride)	74-87-3	8260B	ND		0.50	0.17	ug/L	1
Cyclohexane	110-82-7	8260B	ND		0.50	0.30	ug/L	1
1,2-Dibromo-3-chloropropane (DBCP)	96-12-8	8260B	ND		0.50	0.069	ug/L	1
Dibromochloromethane	124-48-1	8260B	ND		0.50	0.17	ug/L	1
1,2-Dibromoethane (EDB)	106-93-4	8260B	ND		0.50	0.061	ug/L	1
1,3-Dichlorobenzene	541-73-1	8260B	ND		0.50	0.17	ug/L	1
1,2-Dichlorobenzene	95-50-1	8260B	ND		0.50	0.17	ug/L	1
1,4-Dichlorobenzene	106-46-7	8260B	ND		0.50	0.17	ug/L	1
Dichlorodifluoromethane	75-71-8	8260B	ND		0.50	0.071	ug/L	1
1,1-Dichloroethane	75-34-3	8260B	ND		0.50	0.054	ug/L	1
1,2-Dichloroethane	107-06-2	8260B	ND		0.50	0.023	ug/L	1
trans-1,2-Dichloroethene	156-60-5	8260B	0.86		0.50	0.079	ug/L	1
1,1-Dichloroethene	75-35-4	8260B	ND		0.50	0.094	ug/L	1
cis-1,2-Dichloroethene	156-59-2	8260B	3.1		0.50	0.087	ug/L	1
1,2-Dichloropropane	78-87-5	8260B	ND		0.50	0.081	ug/L	1
trans-1,3-Dichloropropene	10061-02-6	8260B	ND		0.50	0.18	ug/L	1
cis-1,3-Dichloropropene	10061-01-5	8260B	ND		0.50	0.090	ug/L	1
Ethylbenzene	100-41-4	8260B	ND		0.50	0.17	ug/L	1
2-Hexanone	591-78-6	8260B	ND		10	0.27	ug/L	1
Isopropylbenzene	98-82-8	8260B	ND		0.50	0.029	ug/L	1
Methyl acetate	79-20-9	8260B	ND		1.0	0.30	ug/L	1
Methyl tertiary butyl ether (MTBE)	1634-04-4	8260B	ND		0.50	0.019	ug/L	1
4-Methyl-2-pentanone	108-10-1	8260B	ND		10	0.31	ug/L	1
Methylcyclohexane	108-87-2	8260B	ND		5.0	0.95	ug/L	1
Methylene chloride	75-09-2	8260B	ND		0.50	0.17	ug/L	1
Styrene	100-42-5	8260B	ND		0.50	0.015	ug/L	1
1,1,2,2-Tetrachloroethane	79-34-5	8260B	ND		0.50	0.013	ug/L	1
Tetrachloroethene	127-18-4	8260B	1.6		0.50	0.014	ug/L	1
Toluene	108-88-3	8260B	ND		0.50	0.17	ug/L	1
1,1,2-Trichloro-1,2,2-Trifluoroethane	76-13-1	8260B	ND		0.50	0.30	ug/L	1
1,2,4-Trichlorobenzene	120-82-1	8260B	ND		0.50	0.17	ug/L	1
1,1,1-Trichloroethane	71-55-6	8260B	ND		0.50	0.029	ug/L	1
1,1,2-Trichloroethane	79-00-5	8260B	ND		0.50	0.031	ug/L	1

PQL = Practical quantitation limit
B = Detected in the method blank
E = Quantitation of compound exceeded the calibration range
ND = Not detected at or above the MDL
J = Estimated result < PQL and ≥ MDL
P = The RPD between two GC columns exceeds 40%
Where applicable, all soil sample analysis are reported on a dry weight basis unless flagged with a "W"
N = Recovery is out of criteria
H = Out of holding time

Volatile Organic Compounds by GC/MS

Client: ARCADIS U.S., Inc.
Laboratory ID: LD14020-015
Description: F39TW12 (10-15)
Matrix: Aqueous
Date Sampled: 04/14/2010 1700
Date Received: 04/17/2010

Run	Prep Method	Analytical Method	Dilution	Analysis Date	Analyst	Prep Date	Batch
1	5030B	8260B	1	04/22/2010 0207	DLB		31987

Parameter	CAS Number	Analytical Method	Result	Q	PQL	MDL	Units	Run
Trichloroethene	79-01-6	8260B	13		0.50	0.024	ug/L	1
Trichlorofluoromethane	75-69-4	8260B	ND		0.50	0.051	ug/L	1
Vinyl chloride	75-01-4	8260B	ND		0.50	0.065	ug/L	1
Xylenes (total)	1330-20-7	8260B	ND		0.50	0.17	ug/L	1

Surrogate	Q	Run 1 % Recovery	Acceptance Limits
1,2-Dichloroethane-d4		95	70-130
Bromofluorobenzene		91	70-130
Toluene-d8		98	70-130

PQL = Practical quantitation limit
B = Detected in the method blank
E = Quantitation of compound exceeded the calibration range
ND = Not detected at or above the MDL
J = Estimated result < PQL and ≥ MDL
P = The RPD between two GC columns exceeds 40%
Where applicable, all soil sample analysis are reported on a dry weight basis unless flagged with a "W"
N = Recovery is out of criteria
H = Out of holding time

Semivolatile Organic Compounds by GC/MS

Client: ARCADIS U.S., Inc.
Laboratory ID: LD14020-015
Description: F39TW12 (10-15)
Matrix: Aqueous
Date Sampled: 04/14/2010 1700
Date Received: 04/17/2010

Run	Prep Method	Analytical Method	Dilution	Analysis Date	Analyst	Prep Date	Batch
1	3520C	8270D	1	04/22/2010 1901	WD	04/18/2010 1330	31716

Parameter	CAS Number	Analytical Method	Result	Q	PQL	MDL	Units	Run
Acenaphthene	83-32-9	8270D	ND		1.0	0.091	ug/L	1
Acenaphthylene	208-96-8	8270D	ND		1.0	0.16	ug/L	1
Acetophenone	98-86-2	8270D	ND		1.0	0.32	ug/L	1
Anthracene	120-12-7	8270D	ND		1.0	0.13	ug/L	1
Atrazine	1912-24-9	8270D	ND		1.0	0.20	ug/L	1
Benzaldehyde	100-52-7	8270D	ND		5.1	1.0	ug/L	1
Benzo(a)anthracene	56-55-3	8270D	ND		1.0	0.15	ug/L	1
Benzo(a)pyrene	50-32-8	8270D	ND		1.0	0.16	ug/L	1
Benzo(b)fluoranthene	205-99-2	8270D	ND		1.0	0.20	ug/L	1
Benzo(g,h,i)perylene	191-24-2	8270D	ND		1.0	0.23	ug/L	1
Benzo(k)fluoranthene	207-08-9	8270D	ND		1.0	0.12	ug/L	1
1,1'-Biphenyl	92-52-4	8270D	ND		1.0	0.20	ug/L	1
4-Bromophenyl phenyl ether	101-55-3	8270D	ND		1.0	0.12	ug/L	1
Butyl benzyl phthalate	85-68-7	8270D	ND		5.1	1.7	ug/L	1
Caprolactam	105-60-2	8270D	ND		5.1	1.2	ug/L	1
Carbazole	86-74-8	8270D	ND		1.0	0.25	ug/L	1
4-Chloro-3-methyl phenol	59-50-7	8270D	ND		1.0	0.22	ug/L	1
4-Chloroaniline	106-47-8	8270D	ND		1.0	0.13	ug/L	1
bis(2-Chloroethoxy)methane	111-91-1	8270D	ND		1.0	0.13	ug/L	1
bis(2-Chloroethyl)ether	111-44-4	8270D	ND		1.0	0.13	ug/L	1
bis(2-Chloroisopropyl)ether	108-60-1	8270D	ND		1.0	0.081	ug/L	1
2-Chloronaphthalene	91-58-7	8270D	ND		1.0	0.12	ug/L	1
2-Chlorophenol	95-57-8	8270D	ND		1.0	0.13	ug/L	1
4-Chlorophenyl phenyl ether	7005-72-3	8270D	ND		1.0	0.11	ug/L	1
Chrysene	218-01-9	8270D	ND		1.0	0.12	ug/L	1
Dibenzo(a,h)anthracene	53-70-3	8270D	ND		1.0	0.13	ug/L	1
Dibenzofuran	132-64-9	8270D	ND		1.0	0.16	ug/L	1
3,3'-Dichlorobenzidine	91-94-1	8270D	ND		5.1	0.82	ug/L	1
2,4-Dichlorophenol	120-83-2	8270D	ND		1.0	0.15	ug/L	1
Diethylphthalate	84-66-2	8270D	ND		5.1	1.7	ug/L	1
Dimethyl phthalate	131-11-3	8270D	ND		5.1	1.7	ug/L	1
2,4-Dimethylphenol	105-67-9	8270D	ND		1.0	0.31	ug/L	1
Di-n-butyl phthalate	84-74-2	8270D	ND		5.1	1.7	ug/L	1
4,6-Dinitro-2-methylphenol	534-52-1	8270D	ND		5.1	1.5	ug/L	1
2,4-Dinitrophenol	51-28-5	8270D	ND		5.1	0.25	ug/L	1
2,4-Dinitrotoluene	121-14-2	8270D	ND		2.0	0.45	ug/L	1
2,6-Dinitrotoluene	606-20-2	8270D	ND		2.0	0.40	ug/L	1
Di-n-octylphthalate	117-84-0	8270D	ND		5.1	1.7	ug/L	1
bis(2-Ethylhexyl)phthalate	117-81-7	8270D	ND		5.1	1.7	ug/L	1
Fluoranthene	206-44-0	8270D	ND		1.0	0.21	ug/L	1
Fluorene	86-73-7	8270D	ND		1.0	0.10	ug/L	1
Hexachlorobenzene	118-74-1	8270D	ND		1.0	0.21	ug/L	1
Hexachlorobutadiene	87-68-3	8270D	ND		1.0	0.091	ug/L	1
Hexachlorocyclopentadiene	77-47-4	8270D	ND		5.1	0.23	ug/L	1

PQL = Practical quantitation limit
B = Detected in the method blank
E = Quantitation of compound exceeded the calibration range
ND = Not detected at or above the MDL
J = Estimated result < PQL and ≥ MDL
P = The RPD between two GC columns exceeds 40%
Where applicable, all soil sample analysis are reported on a dry weight basis unless flagged with a "W"
N = Recovery is out of criteria
H = Out of holding time

Semivolatile Organic Compounds by GC/MS

Client: ARCADIS U.S., Inc.
Laboratory ID: LD14020-015
Description: F39TW12 (10-15)
Matrix: Aqueous
Date Sampled: 04/14/2010 1700
Date Received: 04/17/2010

Run	Prep Method	Analytical Method	Dilution	Analysis Date	Analyst	Prep Date	Batch
1	3520C	8270D	1	04/22/2010 1901	WD	04/18/2010 1330	31716

Parameter	CAS Number	Analytical Method	Result	Q	PQL	MDL	Units	Run
Hexachloroethane	67-72-1	8270D	ND		1.0	0.11	ug/L	1
Indeno(1,2,3-c,d)pyrene	193-39-5	8270D	ND		1.0	0.23	ug/L	1
Isophorone	78-59-1	8270D	ND		1.0	0.081	ug/L	1
2-Methylnaphthalene	91-57-6	8270D	ND		1.0	0.081	ug/L	1
2-Methylphenol	95-48-7	8270D	ND		1.0	0.17	ug/L	1
3 & 4-Methylphenol	106-44-5	8270D	ND		2.0	0.58	ug/L	1
Naphthalene	91-20-3	8270D	ND		1.0	0.071	ug/L	1
2-Nitroaniline	88-74-4	8270D	ND		2.0	0.56	ug/L	1
3-Nitroaniline	99-09-2	8270D	ND		2.0	0.78	ug/L	1
4-Nitroaniline	100-01-6	8270D	ND		2.0	0.39	ug/L	1
Nitrobenzene	98-95-3	8270D	ND		1.0	0.10	ug/L	1
2-Nitrophenol	88-75-5	8270D	ND		2.0	0.27	ug/L	1
4-Nitrophenol	100-02-7	8270D	ND		5.1	0.65	ug/L	1
N-Nitrosodi-n-propylamine	621-64-7	8270D	ND		1.0	0.081	ug/L	1
N-Nitrosodiphenylamine (Diphenylamine)	86-30-6	8270D	ND		1.0	0.38	ug/L	1
Pentachlorophenol	87-86-5	8270D	ND		5.1	0.55	ug/L	1
Phenanthrene	85-01-8	8270D	ND		1.0	0.18	ug/L	1
Phenol	108-95-2	8270D	ND		1.0	0.11	ug/L	1
Pyrene	129-00-0	8270D	ND		1.0	0.16	ug/L	1
2,4,5-Trichlorophenol	95-95-4	8270D	ND		1.0	0.18	ug/L	1
2,4,6-Trichlorophenol	88-06-2	8270D	ND		1.0	0.22	ug/L	1

Surrogate	Q	Run 1 % Recovery	Acceptance Limits
2-Fluorobiphenyl		79	37-129
2-Fluorophenol		71	24-127
Nitrobenzene-d5		85	38-127
Phenol-d5		82	28-128
Terphenyl-d14		33	10-148
2,4,6-Tribromophenol		70	41-144

PQL = Practical quantitation limit
B = Detected in the method blank
E = Quantitation of compound exceeded the calibration range
ND = Not detected at or above the MDL
J = Estimated result < PQL and ≥ MDL
P = The RPD between two GC columns exceeds 40%
Where applicable, all soil sample analysis are reported on a dry weight basis unless flagged with a "W"
N = Recovery is out of criteria
H = Out of holding time

Volatile Organic Compounds by GC/MS

Client: ARCADIS U.S., Inc.
Laboratory ID: LD14020-016
Description: F39TW12 (20-25)
Matrix: Aqueous
Date Sampled: 04/14/2010 1950
Date Received: 04/17/2010

Run	Prep Method	Analytical Method	Dilution	Analysis Date	Analyst	Prep Date	Batch
1	5030B	8260B	1	04/22/2010 0228	DLB		31987

Parameter	CAS Number	Analytical Method	Result	Q	PQL	MDL	Units	Run
Acetone	67-64-1	8260B	4.8	BJ	10	0.061	ug/L	1
Benzene	71-43-2	8260B	0.57		0.50	0.027	ug/L	1
Bromodichloromethane	75-27-4	8260B	ND		0.50	0.17	ug/L	1
Bromoform	75-25-2	8260B	ND		0.50	0.010	ug/L	1
Bromomethane (Methyl bromide)	74-83-9	8260B	ND		0.50	0.20	ug/L	1
2-Butanone (MEK)	78-93-3	8260B	ND		10	2.0	ug/L	1
Carbon disulfide	75-15-0	8260B	0.45	J	0.50	0.097	ug/L	1
Carbon tetrachloride	56-23-5	8260B	ND		0.50	0.085	ug/L	1
Chlorobenzene	108-90-7	8260B	ND		0.50	0.17	ug/L	1
Chloroethane	75-00-3	8260B	ND		0.50	0.17	ug/L	1
Chloroform	67-66-3	8260B	ND		0.50	0.17	ug/L	1
Chloromethane (Methyl chloride)	74-87-3	8260B	ND		0.50	0.17	ug/L	1
Cyclohexane	110-82-7	8260B	ND		0.50	0.30	ug/L	1
1,2-Dibromo-3-chloropropane (DBCP)	96-12-8	8260B	ND		0.50	0.069	ug/L	1
Dibromochloromethane	124-48-1	8260B	ND		0.50	0.17	ug/L	1
1,2-Dibromoethane (EDB)	106-93-4	8260B	ND		0.50	0.061	ug/L	1
1,3-Dichlorobenzene	541-73-1	8260B	ND		0.50	0.17	ug/L	1
1,2-Dichlorobenzene	95-50-1	8260B	ND		0.50	0.17	ug/L	1
1,4-Dichlorobenzene	106-46-7	8260B	ND		0.50	0.17	ug/L	1
Dichlorodifluoromethane	75-71-8	8260B	ND		0.50	0.071	ug/L	1
1,1-Dichloroethane	75-34-3	8260B	ND		0.50	0.054	ug/L	1
1,2-Dichloroethane	107-06-2	8260B	ND		0.50	0.023	ug/L	1
trans-1,2-Dichloroethene	156-60-5	8260B	0.50		0.50	0.079	ug/L	1
1,1-Dichloroethene	75-35-4	8260B	0.12	J	0.50	0.094	ug/L	1
cis-1,2-Dichloroethene	156-59-2	8260B	3.3		0.50	0.087	ug/L	1
1,2-Dichloropropane	78-87-5	8260B	ND		0.50	0.081	ug/L	1
trans-1,3-Dichloropropene	10061-02-6	8260B	ND		0.50	0.18	ug/L	1
cis-1,3-Dichloropropene	10061-01-5	8260B	ND		0.50	0.090	ug/L	1
Ethylbenzene	100-41-4	8260B	ND		0.50	0.17	ug/L	1
2-Hexanone	591-78-6	8260B	ND		10	0.27	ug/L	1
Isopropylbenzene	98-82-8	8260B	ND		0.50	0.029	ug/L	1
Methyl acetate	79-20-9	8260B	ND		1.0	0.30	ug/L	1
Methyl tertiary butyl ether (MTBE)	1634-04-4	8260B	ND		0.50	0.019	ug/L	1
4-Methyl-2-pentanone	108-10-1	8260B	ND		10	0.31	ug/L	1
Methylcyclohexane	108-87-2	8260B	ND		5.0	0.95	ug/L	1
Methylene chloride	75-09-2	8260B	ND		0.50	0.17	ug/L	1
Styrene	100-42-5	8260B	ND		0.50	0.015	ug/L	1
1,1,2,2-Tetrachloroethane	79-34-5	8260B	ND		0.50	0.013	ug/L	1
Tetrachloroethene	127-18-4	8260B	20		0.50	0.014	ug/L	1
Toluene	108-88-3	8260B	ND		0.50	0.17	ug/L	1
1,1,2-Trichloro-1,2,2-Trifluoroethane	76-13-1	8260B	ND		0.50	0.30	ug/L	1
1,2,4-Trichlorobenzene	120-82-1	8260B	ND		0.50	0.17	ug/L	1
1,1,1-Trichloroethane	71-55-6	8260B	ND		0.50	0.029	ug/L	1
1,1,2-Trichloroethane	79-00-5	8260B	ND		0.50	0.031	ug/L	1

PQL = Practical quantitation limit
B = Detected in the method blank
E = Quantitation of compound exceeded the calibration range
ND = Not detected at or above the MDL
J = Estimated result < PQL and ≥ MDL
P = The RPD between two GC columns exceeds 40%
Where applicable, all soil sample analysis are reported on a dry weight basis unless flagged with a "W"
N = Recovery is out of criteria
H = Out of holding time

Volatile Organic Compounds by GC/MS

Client: ARCADIS U.S., Inc.
Laboratory ID: LD14020-016
Description: F39TW12 (20-25)
Matrix: Aqueous
Date Sampled: 04/14/2010 1950
Date Received: 04/17/2010

Run	Prep Method	Analytical Method	Dilution	Analysis Date	Analyst	Prep Date	Batch
1	5030B	8260B	1	04/22/2010 0228	DLB		31987

Parameter	CAS Number	Analytical Method	Result	Q	PQL	MDL	Units	Run
Trichloroethene	79-01-6	8260B	25		0.50	0.024	ug/L	1
Trichlorofluoromethane	75-69-4	8260B	ND		0.50	0.051	ug/L	1
Vinyl chloride	75-01-4	8260B	ND		0.50	0.065	ug/L	1
Xylenes (total)	1330-20-7	8260B	ND		0.50	0.17	ug/L	1

Surrogate	Q	Run 1 % Recovery	Acceptance Limits
1,2-Dichloroethane-d4		96	70-130
Bromofluorobenzene		95	70-130
Toluene-d8		99	70-130

PQL = Practical quantitation limit
B = Detected in the method blank
E = Quantitation of compound exceeded the calibration range
ND = Not detected at or above the MDL
J = Estimated result < PQL and ≥ MDL
P = The RPD between two GC columns exceeds 40%
Where applicable, all soil sample analysis are reported on a dry weight basis unless flagged with a "W"
N = Recovery is out of criteria
H = Out of holding time

Semivolatile Organic Compounds by GC/MS

Client: ARCADIS U.S., Inc.
Laboratory ID: LD14020-016
Description: F39TW12 (20-25)
Matrix: Aqueous
Date Sampled: 04/14/2010 1950
Date Received: 04/17/2010

Run	Prep Method	Analytical Method	Dilution	Analysis Date	Analyst	Prep Date	Batch
1	3520C	8270D	1	04/23/2010 1535	WD	04/18/2010 1330	31716

Parameter	CAS Number	Analytical Method	Result	Q	PQL	MDL	Units	Run
Acenaphthene	83-32-9	8270D	ND		1.0	0.091	ug/L	1
Acenaphthylene	208-96-8	8270D	ND		1.0	0.16	ug/L	1
Acetophenone	98-86-2	8270D	ND		1.0	0.32	ug/L	1
Anthracene	120-12-7	8270D	ND		1.0	0.13	ug/L	1
Atrazine	1912-24-9	8270D	ND		1.0	0.20	ug/L	1
Benzaldehyde	100-52-7	8270D	ND		5.1	1.0	ug/L	1
Benzo(a)anthracene	56-55-3	8270D	ND		1.0	0.15	ug/L	1
Benzo(a)pyrene	50-32-8	8270D	ND		1.0	0.16	ug/L	1
Benzo(b)fluoranthene	205-99-2	8270D	ND		1.0	0.20	ug/L	1
Benzo(g,h,i)perylene	191-24-2	8270D	ND		1.0	0.23	ug/L	1
Benzo(k)fluoranthene	207-08-9	8270D	ND		1.0	0.12	ug/L	1
1,1'-Biphenyl	92-52-4	8270D	ND		1.0	0.20	ug/L	1
4-Bromophenyl phenyl ether	101-55-3	8270D	ND		1.0	0.12	ug/L	1
Butyl benzyl phthalate	85-68-7	8270D	ND		5.1	1.7	ug/L	1
Caprolactam	105-60-2	8270D	ND		5.1	1.2	ug/L	1
Carbazole	86-74-8	8270D	ND		1.0	0.25	ug/L	1
4-Chloro-3-methyl phenol	59-50-7	8270D	ND		1.0	0.22	ug/L	1
4-Chloroaniline	106-47-8	8270D	ND		1.0	0.13	ug/L	1
bis(2-Chloroethoxy)methane	111-91-1	8270D	ND		1.0	0.13	ug/L	1
bis(2-Chloroethyl)ether	111-44-4	8270D	ND		1.0	0.13	ug/L	1
bis(2-Chloroisopropyl)ether	108-60-1	8270D	ND		1.0	0.081	ug/L	1
2-Chloronaphthalene	91-58-7	8270D	ND		1.0	0.12	ug/L	1
2-Chlorophenol	95-57-8	8270D	ND		1.0	0.13	ug/L	1
4-Chlorophenyl phenyl ether	7005-72-3	8270D	ND		1.0	0.11	ug/L	1
Chrysene	218-01-9	8270D	ND		1.0	0.12	ug/L	1
Dibenzo(a,h)anthracene	53-70-3	8270D	ND		1.0	0.13	ug/L	1
Dibenzofuran	132-64-9	8270D	ND		1.0	0.16	ug/L	1
3,3'-Dichlorobenzidine	91-94-1	8270D	ND		5.1	0.82	ug/L	1
2,4-Dichlorophenol	120-83-2	8270D	ND		1.0	0.15	ug/L	1
Diethylphthalate	84-66-2	8270D	ND		5.1	1.7	ug/L	1
Dimethyl phthalate	131-11-3	8270D	ND		5.1	1.7	ug/L	1
2,4-Dimethylphenol	105-67-9	8270D	ND		1.0	0.31	ug/L	1
Di-n-butyl phthalate	84-74-2	8270D	ND		5.1	1.7	ug/L	1
4,6-Dinitro-2-methylphenol	534-52-1	8270D	ND		5.1	1.5	ug/L	1
2,4-Dinitrophenol	51-28-5	8270D	ND		5.1	0.25	ug/L	1
2,4-Dinitrotoluene	121-14-2	8270D	ND		2.0	0.45	ug/L	1
2,6-Dinitrotoluene	606-20-2	8270D	ND		2.0	0.40	ug/L	1
Di-n-octylphthalate	117-84-0	8270D	ND		5.1	1.7	ug/L	1
bis(2-Ethylhexyl)phthalate	117-81-7	8270D	ND		5.1	1.7	ug/L	1
Fluoranthene	206-44-0	8270D	ND		1.0	0.21	ug/L	1
Fluorene	86-73-7	8270D	ND		1.0	0.10	ug/L	1
Hexachlorobenzene	118-74-1	8270D	ND		1.0	0.21	ug/L	1
Hexachlorobutadiene	87-68-3	8270D	ND		1.0	0.091	ug/L	1
Hexachlorocyclopentadiene	77-47-4	8270D	ND		5.1	0.23	ug/L	1

PQL = Practical quantitation limit
B = Detected in the method blank
E = Quantitation of compound exceeded the calibration range
ND = Not detected at or above the MDL
J = Estimated result < PQL and ≥ MDL
P = The RPD between two GC columns exceeds 40%
Where applicable, all soil sample analysis are reported on a dry weight basis unless flagged with a "W"
N = Recovery is out of criteria
H = Out of holding time

Semivolatile Organic Compounds by GC/MS

Client: ARCADIS U.S., Inc.
Laboratory ID: LD14020-016
Description: F39TW12 (20-25)
Matrix: Aqueous
Date Sampled: 04/14/2010 1950
Date Received: 04/17/2010

Run	Prep Method	Analytical Method	Dilution	Analysis Date	Analyst	Prep Date	Batch
1	3520C	8270D	1	04/23/2010 1535	WD	04/18/2010 1330	31716

Parameter	CAS Number	Analytical Method	Result	Q	PQL	MDL	Units	Run
Hexachloroethane	67-72-1	8270D	ND		1.0	0.11	ug/L	1
Indeno(1,2,3-c,d)pyrene	193-39-5	8270D	ND		1.0	0.23	ug/L	1
Isophorone	78-59-1	8270D	ND		1.0	0.081	ug/L	1
2-Methylnaphthalene	91-57-6	8270D	ND		1.0	0.081	ug/L	1
2-Methylphenol	95-48-7	8270D	ND		1.0	0.17	ug/L	1
3 & 4-Methylphenol	106-44-5	8270D	ND		2.0	0.58	ug/L	1
Naphthalene	91-20-3	8270D	ND		1.0	0.071	ug/L	1
2-Nitroaniline	88-74-4	8270D	ND		2.0	0.56	ug/L	1
3-Nitroaniline	99-09-2	8270D	ND		2.0	0.78	ug/L	1
4-Nitroaniline	100-01-6	8270D	ND		2.0	0.39	ug/L	1
Nitrobenzene	98-95-3	8270D	ND		1.0	0.10	ug/L	1
2-Nitrophenol	88-75-5	8270D	ND		2.0	0.27	ug/L	1
4-Nitrophenol	100-02-7	8270D	ND		5.1	0.65	ug/L	1
N-Nitrosodi-n-propylamine	621-64-7	8270D	ND		1.0	0.081	ug/L	1
N-Nitrosodiphenylamine (Diphenylamine)	86-30-6	8270D	ND		1.0	0.38	ug/L	1
Pentachlorophenol	87-86-5	8270D	ND		5.1	0.55	ug/L	1
Phenanthrene	85-01-8	8270D	ND		1.0	0.18	ug/L	1
Phenol	108-95-2	8270D	ND		1.0	0.11	ug/L	1
Pyrene	129-00-0	8270D	ND		1.0	0.16	ug/L	1
2,4,5-Trichlorophenol	95-95-4	8270D	ND		1.0	0.18	ug/L	1
2,4,6-Trichlorophenol	88-06-2	8270D	ND		1.0	0.22	ug/L	1

Surrogate	Q	Run 1 % Recovery	Acceptance Limits
2-Fluorobiphenyl		73	37-129
2-Fluorophenol		67	24-127
Nitrobenzene-d5		72	38-127
Phenol-d5		63	28-128
Terphenyl-d14		25	10-148
2,4,6-Tribromophenol		55	41-144

PQL = Practical quantitation limit
B = Detected in the method blank
E = Quantitation of compound exceeded the calibration range
ND = Not detected at or above the MDL
J = Estimated result < PQL and ≥ MDL
P = The RPD between two GC columns exceeds 40%
Where applicable, all soil sample analysis are reported on a dry weight basis unless flagged with a "W"
N = Recovery is out of criteria
H = Out of holding time

Volatile Organic Compounds by GC/MS

Client: ARCADIS U.S., Inc.
Laboratory ID: LD14020-017
Description: F39TW12 (30-35)
Matrix: Aqueous
Date Sampled: 04/14/2010 1845
Date Received: 04/17/2010

Run	Prep Method	Analytical Method	Dilution	Analysis Date	Analyst	Prep Date	Batch
1	5030B	8260B	1	04/22/2010 0250	DLB		31987

Parameter	CAS Number	Analytical Method	Result	Q	PQL	MDL	Units	Run
Acetone	67-64-1	8260B	3.5	BJ	10	0.061	ug/L	1
Benzene	71-43-2	8260B	ND		0.50	0.027	ug/L	1
Bromodichloromethane	75-27-4	8260B	ND		0.50	0.17	ug/L	1
Bromoform	75-25-2	8260B	ND		0.50	0.010	ug/L	1
Bromomethane (Methyl bromide)	74-83-9	8260B	ND		0.50	0.20	ug/L	1
2-Butanone (MEK)	78-93-3	8260B	ND		10	2.0	ug/L	1
Carbon disulfide	75-15-0	8260B	0.19	J	0.50	0.097	ug/L	1
Carbon tetrachloride	56-23-5	8260B	ND		0.50	0.085	ug/L	1
Chlorobenzene	108-90-7	8260B	ND		0.50	0.17	ug/L	1
Chloroethane	75-00-3	8260B	ND		0.50	0.17	ug/L	1
Chloroform	67-66-3	8260B	ND		0.50	0.17	ug/L	1
Chloromethane (Methyl chloride)	74-87-3	8260B	ND		0.50	0.17	ug/L	1
Cyclohexane	110-82-7	8260B	ND		0.50	0.30	ug/L	1
1,2-Dibromo-3-chloropropane (DBCP)	96-12-8	8260B	ND		0.50	0.069	ug/L	1
Dibromochloromethane	124-48-1	8260B	ND		0.50	0.17	ug/L	1
1,2-Dibromoethane (EDB)	106-93-4	8260B	ND		0.50	0.061	ug/L	1
1,3-Dichlorobenzene	541-73-1	8260B	ND		0.50	0.17	ug/L	1
1,2-Dichlorobenzene	95-50-1	8260B	ND		0.50	0.17	ug/L	1
1,4-Dichlorobenzene	106-46-7	8260B	ND		0.50	0.17	ug/L	1
Dichlorodifluoromethane	75-71-8	8260B	ND		0.50	0.071	ug/L	1
1,1-Dichloroethane	75-34-3	8260B	ND		0.50	0.054	ug/L	1
1,2-Dichloroethane	107-06-2	8260B	ND		0.50	0.023	ug/L	1
trans-1,2-Dichloroethene	156-60-5	8260B	ND		0.50	0.079	ug/L	1
1,1-Dichloroethene	75-35-4	8260B	ND		0.50	0.094	ug/L	1
cis-1,2-Dichloroethene	156-59-2	8260B	0.20	J	0.50	0.087	ug/L	1
1,2-Dichloropropane	78-87-5	8260B	ND		0.50	0.081	ug/L	1
trans-1,3-Dichloropropene	10061-02-6	8260B	ND		0.50	0.18	ug/L	1
cis-1,3-Dichloropropene	10061-01-5	8260B	ND		0.50	0.090	ug/L	1
Ethylbenzene	100-41-4	8260B	ND		0.50	0.17	ug/L	1
2-Hexanone	591-78-6	8260B	ND		10	0.27	ug/L	1
Isopropylbenzene	98-82-8	8260B	ND		0.50	0.029	ug/L	1
Methyl acetate	79-20-9	8260B	ND		1.0	0.30	ug/L	1
Methyl tertiary butyl ether (MTBE)	1634-04-4	8260B	ND		0.50	0.019	ug/L	1
4-Methyl-2-pentanone	108-10-1	8260B	ND		10	0.31	ug/L	1
Methylcyclohexane	108-87-2	8260B	ND		5.0	0.95	ug/L	1
Methylene chloride	75-09-2	8260B	ND		0.50	0.17	ug/L	1
Styrene	100-42-5	8260B	ND		0.50	0.015	ug/L	1
1,1,2,2-Tetrachloroethane	79-34-5	8260B	ND		0.50	0.013	ug/L	1
Tetrachloroethene	127-18-4	8260B	ND		0.50	0.014	ug/L	1
Toluene	108-88-3	8260B	ND		0.50	0.17	ug/L	1
1,1,2-Trichloro-1,2,2-Trifluoroethane	76-13-1	8260B	ND		0.50	0.30	ug/L	1
1,2,4-Trichlorobenzene	120-82-1	8260B	ND		0.50	0.17	ug/L	1
1,1,1-Trichloroethane	71-55-6	8260B	ND		0.50	0.029	ug/L	1
1,1,2-Trichloroethane	79-00-5	8260B	ND		0.50	0.031	ug/L	1

PQL = Practical quantitation limit
B = Detected in the method blank
E = Quantitation of compound exceeded the calibration range
ND = Not detected at or above the MDL
J = Estimated result < PQL and ≥ MDL
P = The RPD between two GC columns exceeds 40%
Where applicable, all soil sample analysis are reported on a dry weight basis unless flagged with a "W"
N = Recovery is out of criteria
H = Out of holding time

Volatile Organic Compounds by GC/MS

Client: ARCADIS U.S., Inc.
Laboratory ID: LD14020-017
Description: F39TW12 (30-35)
Matrix: Aqueous
Date Sampled: 04/14/2010 1845
Date Received: 04/17/2010

Run	Prep Method	Analytical Method	Dilution	Analysis Date	Analyst	Prep Date	Batch
1	5030B	8260B	1	04/22/2010 0250	DLB		31987

Parameter	CAS Number	Analytical Method	Result	Q	PQL	MDL	Units	Run
Trichloroethene	79-01-6	8260B	0.10	J	0.50	0.024	ug/L	1
Trichlorofluoromethane	75-69-4	8260B	ND		0.50	0.051	ug/L	1
Vinyl chloride	75-01-4	8260B	ND		0.50	0.065	ug/L	1
Xylenes (total)	1330-20-7	8260B	ND		0.50	0.17	ug/L	1

Surrogate	Q	Run 1 % Recovery	Acceptance Limits
1,2-Dichloroethane-d4		96	70-130
Bromofluorobenzene		93	70-130
Toluene-d8		98	70-130

PQL = Practical quantitation limit
B = Detected in the method blank
E = Quantitation of compound exceeded the calibration range
ND = Not detected at or above the MDL
J = Estimated result < PQL and ≥ MDL
P = The RPD between two GC columns exceeds 40%
Where applicable, all soil sample analysis are reported on a dry weight basis unless flagged with a "W"
N = Recovery is out of criteria
H = Out of holding time

Semivolatile Organic Compounds by GC/MS

Client: ARCADIS U.S., Inc.
Laboratory ID: LD14020-017
Description: F39TW12 (30-35)
Matrix: Aqueous
Date Sampled: 04/14/2010 1845
Date Received: 04/17/2010

Run	Prep Method	Analytical Method	Dilution	Analysis Date	Analyst	Prep Date	Batch
1	3520C	8270D	1	04/22/2010 2023	WD	04/18/2010 1330	31716

Parameter	CAS Number	Analytical Method	Result	Q	PQL	MDL	Units	Run
Acenaphthene	83-32-9	8270D	ND		1.0	0.092	ug/L	1
Acenaphthylene	208-96-8	8270D	ND		1.0	0.16	ug/L	1
Acetophenone	98-86-2	8270D	ND		1.0	0.33	ug/L	1
Anthracene	120-12-7	8270D	ND		1.0	0.13	ug/L	1
Atrazine	1912-24-9	8270D	ND		1.0	0.20	ug/L	1
Benzaldehyde	100-52-7	8270D	ND		5.1	1.0	ug/L	1
Benzo(a)anthracene	56-55-3	8270D	ND		1.0	0.15	ug/L	1
Benzo(a)pyrene	50-32-8	8270D	ND		1.0	0.16	ug/L	1
Benzo(b)fluoranthene	205-99-2	8270D	ND		1.0	0.20	ug/L	1
Benzo(g,h,i)perylene	191-24-2	8270D	ND		1.0	0.23	ug/L	1
Benzo(k)fluoranthene	207-08-9	8270D	ND		1.0	0.12	ug/L	1
1,1'-Biphenyl	92-52-4	8270D	ND		1.0	0.20	ug/L	1
4-Bromophenyl phenyl ether	101-55-3	8270D	ND		1.0	0.12	ug/L	1
Butyl benzyl phthalate	85-68-7	8270D	ND		5.1	1.7	ug/L	1
Caprolactam	105-60-2	8270D	ND		5.1	1.2	ug/L	1
Carbazole	86-74-8	8270D	ND		1.0	0.26	ug/L	1
4-Chloro-3-methyl phenol	59-50-7	8270D	ND		1.0	0.22	ug/L	1
4-Chloroaniline	106-47-8	8270D	ND		1.0	0.13	ug/L	1
bis(2-Chloroethoxy)methane	111-91-1	8270D	ND		1.0	0.13	ug/L	1
bis(2-Chloroethyl)ether	111-44-4	8270D	ND		1.0	0.13	ug/L	1
bis(2-Chloroisopropyl)ether	108-60-1	8270D	ND		1.0	0.082	ug/L	1
2-Chloronaphthalene	91-58-7	8270D	ND		1.0	0.12	ug/L	1
2-Chlorophenol	95-57-8	8270D	ND		1.0	0.13	ug/L	1
4-Chlorophenyl phenyl ether	7005-72-3	8270D	ND		1.0	0.11	ug/L	1
Chrysene	218-01-9	8270D	ND		1.0	0.12	ug/L	1
Dibenzo(a,h)anthracene	53-70-3	8270D	ND		1.0	0.13	ug/L	1
Dibenzofuran	132-64-9	8270D	ND		1.0	0.16	ug/L	1
3,3'-Dichlorobenzidine	91-94-1	8270D	ND		5.1	0.83	ug/L	1
2,4-Dichlorophenol	120-83-2	8270D	ND		1.0	0.15	ug/L	1
Diethylphthalate	84-66-2	8270D	ND		5.1	1.7	ug/L	1
Dimethyl phthalate	131-11-3	8270D	ND		5.1	1.7	ug/L	1
2,4-Dimethylphenol	105-67-9	8270D	ND		1.0	0.32	ug/L	1
Di-n-butyl phthalate	84-74-2	8270D	ND		5.1	1.7	ug/L	1
4,6-Dinitro-2-methylphenol	534-52-1	8270D	ND		5.1	1.5	ug/L	1
2,4-Dinitrophenol	51-28-5	8270D	ND		5.1	0.26	ug/L	1
2,4-Dinitrotoluene	121-14-2	8270D	ND		2.0	0.46	ug/L	1
2,6-Dinitrotoluene	606-20-2	8270D	ND		2.0	0.41	ug/L	1
Di-n-octylphthalate	117-84-0	8270D	ND		5.1	1.7	ug/L	1
bis(2-Ethylhexyl)phthalate	117-81-7	8270D	ND		5.1	1.7	ug/L	1
Fluoranthene	206-44-0	8270D	ND		1.0	0.21	ug/L	1
Fluorene	86-73-7	8270D	ND		1.0	0.10	ug/L	1
Hexachlorobenzene	118-74-1	8270D	ND		1.0	0.21	ug/L	1
Hexachlorobutadiene	87-68-3	8270D	ND		1.0	0.092	ug/L	1
Hexachlorocyclopentadiene	77-47-4	8270D	ND		5.1	0.23	ug/L	1

PQL = Practical quantitation limit
B = Detected in the method blank
E = Quantitation of compound exceeded the calibration range
ND = Not detected at or above the MDL
J = Estimated result < PQL and ≥ MDL
P = The RPD between two GC columns exceeds 40%
Where applicable, all soil sample analysis are reported on a dry weight basis unless flagged with a "W"
N = Recovery is out of criteria
H = Out of holding time

Semivolatile Organic Compounds by GC/MS

Client: ARCADIS U.S., Inc.
Laboratory ID: LD14020-017
Description: F39TW12 (30-35)
Matrix: Aqueous
Date Sampled: 04/14/2010 1845
Date Received: 04/17/2010

Run	Prep Method	Analytical Method	Dilution	Analysis Date	Analyst	Prep Date	Batch
1	3520C	8270D	1	04/22/2010 2023	WD	04/18/2010 1330	31716

Parameter	CAS Number	Analytical Method	Result	Q	PQL	MDL	Units	Run
Hexachloroethane	67-72-1	8270D	ND		1.0	0.11	ug/L	1
Indeno(1,2,3-c,d)pyrene	193-39-5	8270D	ND		1.0	0.23	ug/L	1
Isophorone	78-59-1	8270D	ND		1.0	0.082	ug/L	1
2-Methylnaphthalene	91-57-6	8270D	ND		1.0	0.082	ug/L	1
2-Methylphenol	95-48-7	8270D	ND		1.0	0.17	ug/L	1
3 & 4-Methylphenol	106-44-5	8270D	ND		2.0	0.58	ug/L	1
Naphthalene	91-20-3	8270D	ND		1.0	0.071	ug/L	1
2-Nitroaniline	88-74-4	8270D	ND		2.0	0.56	ug/L	1
3-Nitroaniline	99-09-2	8270D	ND		2.0	0.79	ug/L	1
4-Nitroaniline	100-01-6	8270D	ND		2.0	0.40	ug/L	1
Nitrobenzene	98-95-3	8270D	ND		1.0	0.10	ug/L	1
2-Nitrophenol	88-75-5	8270D	ND		2.0	0.28	ug/L	1
4-Nitrophenol	100-02-7	8270D	ND		5.1	0.65	ug/L	1
N-Nitrosodi-n-propylamine	621-64-7	8270D	ND		1.0	0.082	ug/L	1
N-Nitrosodiphenylamine (Diphenylamine)	86-30-6	8270D	ND		1.0	0.39	ug/L	1
Pentachlorophenol	87-86-5	8270D	ND		5.1	0.55	ug/L	1
Phenanthrene	85-01-8	8270D	ND		1.0	0.18	ug/L	1
Phenol	108-95-2	8270D	ND		1.0	0.11	ug/L	1
Pyrene	129-00-0	8270D	ND		1.0	0.16	ug/L	1
2,4,5-Trichlorophenol	95-95-4	8270D	ND		1.0	0.18	ug/L	1
2,4,6-Trichlorophenol	88-06-2	8270D	ND		1.0	0.22	ug/L	1

Surrogate	Q	Run 1 % Recovery	Acceptance Limits
2-Fluorobiphenyl		70	37-129
2-Fluorophenol		71	24-127
Nitrobenzene-d5		41	38-127
Phenol-d5		78	28-128
Terphenyl-d14		24	10-148
2,4,6-Tribromophenol		71	41-144

PQL = Practical quantitation limit
B = Detected in the method blank
E = Quantitation of compound exceeded the calibration range
ND = Not detected at or above the MDL
J = Estimated result < PQL and ≥ MDL
P = The RPD between two GC columns exceeds 40%
Where applicable, all soil sample analysis are reported on a dry weight basis unless flagged with a "W"
N = Recovery is out of criteria
H = Out of holding time

Volatile Organic Compounds by GC/MS

Client: ARCADIS U.S., Inc.
Laboratory ID: LD14020-018
Description: F39TW12 (40-45)
Matrix: Aqueous
Date Sampled: 04/14/2010 1620
Date Received: 04/17/2010

Run	Prep Method	Analytical Method	Dilution	Analysis Date	Analyst	Prep Date	Batch
1	5030B	8260B	1	04/22/2010 0311	DLB		31987

Parameter	CAS Number	Analytical Method	Result	Q	PQL	MDL	Units	Run
Acetone	67-64-1	8260B	7.2	BJ	10	0.061	ug/L	1
Benzene	71-43-2	8260B	ND		0.50	0.027	ug/L	1
Bromodichloromethane	75-27-4	8260B	ND		0.50	0.17	ug/L	1
Bromoform	75-25-2	8260B	ND		0.50	0.010	ug/L	1
Bromomethane (Methyl bromide)	74-83-9	8260B	ND		0.50	0.20	ug/L	1
2-Butanone (MEK)	78-93-3	8260B	ND		10	2.0	ug/L	1
Carbon disulfide	75-15-0	8260B	0.19	J	0.50	0.097	ug/L	1
Carbon tetrachloride	56-23-5	8260B	ND		0.50	0.085	ug/L	1
Chlorobenzene	108-90-7	8260B	ND		0.50	0.17	ug/L	1
Chloroethane	75-00-3	8260B	ND		0.50	0.17	ug/L	1
Chloroform	67-66-3	8260B	ND		0.50	0.17	ug/L	1
Chloromethane (Methyl chloride)	74-87-3	8260B	ND		0.50	0.17	ug/L	1
Cyclohexane	110-82-7	8260B	ND		0.50	0.30	ug/L	1
1,2-Dibromo-3-chloropropane (DBCP)	96-12-8	8260B	ND		0.50	0.069	ug/L	1
Dibromochloromethane	124-48-1	8260B	ND		0.50	0.17	ug/L	1
1,2-Dibromoethane (EDB)	106-93-4	8260B	ND		0.50	0.061	ug/L	1
1,3-Dichlorobenzene	541-73-1	8260B	ND		0.50	0.17	ug/L	1
1,2-Dichlorobenzene	95-50-1	8260B	ND		0.50	0.17	ug/L	1
1,4-Dichlorobenzene	106-46-7	8260B	ND		0.50	0.17	ug/L	1
Dichlorodifluoromethane	75-71-8	8260B	ND		0.50	0.071	ug/L	1
1,1-Dichloroethane	75-34-3	8260B	ND		0.50	0.054	ug/L	1
1,2-Dichloroethane	107-06-2	8260B	ND		0.50	0.023	ug/L	1
trans-1,2-Dichloroethene	156-60-5	8260B	ND		0.50	0.079	ug/L	1
1,1-Dichloroethene	75-35-4	8260B	ND		0.50	0.094	ug/L	1
cis-1,2-Dichloroethene	156-59-2	8260B	ND		0.50	0.087	ug/L	1
1,2-Dichloropropane	78-87-5	8260B	ND		0.50	0.081	ug/L	1
trans-1,3-Dichloropropene	10061-02-6	8260B	ND		0.50	0.18	ug/L	1
cis-1,3-Dichloropropene	10061-01-5	8260B	ND		0.50	0.090	ug/L	1
Ethylbenzene	100-41-4	8260B	ND		0.50	0.17	ug/L	1
2-Hexanone	591-78-6	8260B	ND		10	0.27	ug/L	1
Isopropylbenzene	98-82-8	8260B	ND		0.50	0.029	ug/L	1
Methyl acetate	79-20-9	8260B	ND		1.0	0.30	ug/L	1
Methyl tertiary butyl ether (MTBE)	1634-04-4	8260B	ND		0.50	0.019	ug/L	1
4-Methyl-2-pentanone	108-10-1	8260B	ND		10	0.31	ug/L	1
Methylcyclohexane	108-87-2	8260B	ND		5.0	0.95	ug/L	1
Methylene chloride	75-09-2	8260B	ND		0.50	0.17	ug/L	1
Styrene	100-42-5	8260B	ND		0.50	0.015	ug/L	1
1,1,2,2-Tetrachloroethane	79-34-5	8260B	ND		0.50	0.013	ug/L	1
Tetrachloroethene	127-18-4	8260B	ND		0.50	0.014	ug/L	1
Toluene	108-88-3	8260B	ND		0.50	0.17	ug/L	1
1,1,2-Trichloro-1,2,2-Trifluoroethane	76-13-1	8260B	ND		0.50	0.30	ug/L	1
1,2,4-Trichlorobenzene	120-82-1	8260B	ND		0.50	0.17	ug/L	1
1,1,1-Trichloroethane	71-55-6	8260B	ND		0.50	0.029	ug/L	1
1,1,2-Trichloroethane	79-00-5	8260B	ND		0.50	0.031	ug/L	1

PQL = Practical quantitation limit
B = Detected in the method blank
E = Quantitation of compound exceeded the calibration range
ND = Not detected at or above the MDL
J = Estimated result < PQL and ≥ MDL
P = The RPD between two GC columns exceeds 40%
Where applicable, all soil sample analysis are reported on a dry weight basis unless flagged with a "W"
N = Recovery is out of criteria
H = Out of holding time

Volatile Organic Compounds by GC/MS

Client: ARCADIS U.S., Inc.
Laboratory ID: LD14020-018
Description: F39TW12 (40-45)
Matrix: Aqueous
Date Sampled: 04/14/2010 1620
Date Received: 04/17/2010

Run	Prep Method	Analytical Method	Dilution	Analysis Date	Analyst	Prep Date	Batch
1	5030B	8260B	1	04/22/2010 0311	DLB		31987

Parameter	CAS Number	Analytical Method	Result	Q	PQL	MDL	Units	Run
Trichloroethene	79-01-6	8260B	ND		0.50	0.024	ug/L	1
Trichlorofluoromethane	75-69-4	8260B	ND		0.50	0.051	ug/L	1
Vinyl chloride	75-01-4	8260B	ND		0.50	0.065	ug/L	1
Xylenes (total)	1330-20-7	8260B	ND		0.50	0.17	ug/L	1

Surrogate	Q	Run 1 % Recovery	Acceptance Limits
1,2-Dichloroethane-d4		97	70-130
Bromofluorobenzene		95	70-130
Toluene-d8		99	70-130

PQL = Practical quantitation limit
B = Detected in the method blank
E = Quantitation of compound exceeded the calibration range
ND = Not detected at or above the MDL
J = Estimated result < PQL and ≥ MDL
P = The RPD between two GC columns exceeds 40%
Where applicable, all soil sample analysis are reported on a dry weight basis unless flagged with a "W"
N = Recovery is out of criteria
H = Out of holding time

Semivolatile Organic Compounds by GC/MS

Client: ARCADIS U.S., Inc.
Laboratory ID: LD14020-018
Description: F39TW12 (40-45)
Matrix: Aqueous
Date Sampled: 04/14/2010 1620
Date Received: 04/17/2010

Run	Prep Method	Analytical Method	Dilution	Analysis Date	Analyst	Prep Date	Batch
1	3520C	8270D	1	04/23/2010 1637	JGH	04/18/2010 1330	31716
2	3520C	8270D	1	04/29/2010 1530	WD	04/26/2010 2104	32229

Parameter	CAS Number	Analytical Method	Result	Q	PQL	MDL	Units	Run
Acenaphthene	83-32-9	8270D	ND		1.0	0.090	ug/L	1
Acenaphthylene	208-96-8	8270D	ND		1.0	0.16	ug/L	1
Acetophenone	98-86-2	8270D	ND		1.0	0.32	ug/L	1
Anthracene	120-12-7	8270D	ND		1.0	0.13	ug/L	1
Atrazine	1912-24-9	8270D	ND		1.0	0.20	ug/L	1
Benzaldehyde	100-52-7	8270D	ND		5.0	1.0	ug/L	1
Benzo(a)anthracene	56-55-3	8270D	ND		1.0	0.15	ug/L	1
Benzo(a)pyrene	50-32-8	8270D	ND		1.0	0.16	ug/L	1
Benzo(b)fluoranthene	205-99-2	8270D	ND		1.0	0.20	ug/L	1
Benzo(g,h,i)perylene	191-24-2	8270D	ND		1.0	0.23	ug/L	1
Benzo(k)fluoranthene	207-08-9	8270D	ND		1.0	0.12	ug/L	1
1,1'-Biphenyl	92-52-4	8270D	ND		1.0	0.20	ug/L	1
4-Bromophenyl phenyl ether	101-55-3	8270D	ND		1.0	0.12	ug/L	1
Butyl benzyl phthalate	85-68-7	8270D	ND		5.0	1.7	ug/L	1
Caprolactam	105-60-2	8270D	ND		5.0	1.2	ug/L	1
Carbazole	86-74-8	8270D	ND		1.0	0.25	ug/L	1
4-Chloro-3-methyl phenol	59-50-7	8270D	ND		1.0	0.22	ug/L	1
4-Chloroaniline	106-47-8	8270D	ND		1.0	0.13	ug/L	1
bis(2-Chloroethoxy)methane	111-91-1	8270D	ND		1.0	0.13	ug/L	1
bis(2-Chloroethyl)ether	111-44-4	8270D	ND		1.0	0.13	ug/L	1
bis(2-Chloroisopropyl)ether	108-60-1	8270D	ND		1.0	0.080	ug/L	1
2-Chloronaphthalene	91-58-7	8270D	ND		1.0	0.12	ug/L	1
2-Chlorophenol	95-57-8	8270D	ND		1.0	0.13	ug/L	1
4-Chlorophenyl phenyl ether	7005-72-3	8270D	ND		1.0	0.11	ug/L	1
Chrysene	218-01-9	8270D	ND		1.0	0.12	ug/L	1
Dibenzo(a,h)anthracene	53-70-3	8270D	ND		1.0	0.13	ug/L	1
Dibenzofuran	132-64-9	8270D	ND		1.0	0.16	ug/L	1
3,3'-Dichlorobenzidine	91-94-1	8270D	ND		5.0	0.81	ug/L	1
2,4-Dichlorophenol	120-83-2	8270D	ND		1.0	0.15	ug/L	1
Diethylphthalate	84-66-2	8270D	ND		5.0	1.7	ug/L	1
Dimethyl phthalate	131-11-3	8270D	ND		5.0	1.7	ug/L	1
2,4-Dimethylphenol	105-67-9	8270D	ND		1.0	0.31	ug/L	1
Di-n-butyl phthalate	84-74-2	8270D	ND		5.0	1.7	ug/L	1
4,6-Dinitro-2-methylphenol	534-52-1	8270D	ND		5.0	1.5	ug/L	1
2,4-Dinitrophenol	51-28-5	8270D	ND		5.0	0.25	ug/L	1
2,4-Dinitrotoluene	121-14-2	8270D	ND		2.0	0.45	ug/L	1
2,6-Dinitrotoluene	606-20-2	8270D	ND		2.0	0.40	ug/L	1
Di-n-octylphthalate	117-84-0	8270D	ND		5.0	1.7	ug/L	1
bis(2-Ethylhexyl)phthalate	117-81-7	8270D	ND		5.0	1.7	ug/L	1
Fluoranthene	206-44-0	8270D	ND		1.0	0.21	ug/L	1
Fluorene	86-73-7	8270D	ND		1.0	0.10	ug/L	1
Hexachlorobenzene	118-74-1	8270D	ND		1.0	0.21	ug/L	1
Hexachlorobutadiene	87-68-3	8270D	ND		1.0	0.090	ug/L	1

PQL = Practical quantitation limit
B = Detected in the method blank
E = Quantitation of compound exceeded the calibration range
ND = Not detected at or above the MDL
J = Estimated result < PQL and ≥ MDL
P = The RPD between two GC columns exceeds 40%
Where applicable, all soil sample analysis are reported on a dry weight basis unless flagged with a "W"
N = Recovery is out of criteria
H = Out of holding time

Semivolatile Organic Compounds by GC/MS

Client: ARCADIS U.S., Inc.
Laboratory ID: LD14020-018
Description: F39TW12 (40-45)
Matrix: Aqueous
Date Sampled: 04/14/2010 1620
Date Received: 04/17/2010

Run	Prep Method	Analytical Method	Dilution	Analysis Date	Analyst	Prep Date	Batch
1	3520C	8270D	1	04/23/2010 1637	JGH	04/18/2010 1330	31716
2	3520C	8270D	1	04/29/2010 1530	WD	04/26/2010 2104	32229

Parameter	CAS Number	Analytical Method	Result	Q	PQL	MDL	Units	Run
Hexachlorocyclopentadiene	77-47-4	8270D	ND		5.0	0.23	ug/L	1
Hexachloroethane	67-72-1	8270D	ND		1.0	0.11	ug/L	1
Indeno(1,2,3-c,d)pyrene	193-39-5	8270D	ND		1.0	0.23	ug/L	1
Isophorone	78-59-1	8270D	ND		1.0	0.080	ug/L	1
2-Methylnaphthalene	91-57-6	8270D	ND		1.0	0.080	ug/L	1
2-Methylphenol	95-48-7	8270D	ND		1.0	0.17	ug/L	1
3 & 4-Methylphenol	106-44-5	8270D	ND		2.0	0.57	ug/L	1
Naphthalene	91-20-3	8270D	ND		1.0	0.070	ug/L	1
2-Nitroaniline	88-74-4	8270D	ND		2.0	0.55	ug/L	1
3-Nitroaniline	99-09-2	8270D	ND		2.0	0.77	ug/L	1
4-Nitroaniline	100-01-6	8270D	ND		2.0	0.39	ug/L	1
Nitrobenzene	98-95-3	8270D	ND		1.0	0.10	ug/L	1
2-Nitrophenol	88-75-5	8270D	ND		2.0	0.27	ug/L	1
4-Nitrophenol	100-02-7	8270D	ND		5.0	0.64	ug/L	1
N-Nitrosodi-n-propylamine	621-64-7	8270D	ND		1.0	0.080	ug/L	1
N-Nitrosodiphenylamine (Diphenylamine)	86-30-6	8270D	ND		1.0	0.38	ug/L	1
Pentachlorophenol	87-86-5	8270D	ND		5.0	0.54	ug/L	1
Phenanthrene	85-01-8	8270D	ND		1.0	0.18	ug/L	1
Phenol	108-95-2	8270D	ND		1.0	0.11	ug/L	1
Pyrene	129-00-0	8270D	ND		1.0	0.16	ug/L	1
2,4,5-Trichlorophenol	95-95-4	8270D	ND		1.0	0.18	ug/L	1
2,4,6-Trichlorophenol	88-06-2	8270D	ND		1.0	0.22	ug/L	1

Surrogate	Q	Run 1 % Recovery	Acceptance Limits	Q	Run 2 % Recovery	Acceptance Limits
2-Fluorobiphenyl		65	37-129	H	44	37-129
2-Fluorophenol		64	24-127	H	58	24-127
Nitrobenzene-d5		74	38-127	H	45	38-127
Phenol-d5		70	28-128	H	51	28-128
Terphenyl-d14	N	7.0	10-148	HN	8.1	10-148
2,4,6-Tribromophenol		54	41-144	H	53	41-144

PQL = Practical quantitation limit
B = Detected in the method blank
E = Quantitation of compound exceeded the calibration range
ND = Not detected at or above the MDL
J = Estimated result < PQL and ≥ MDL
P = The RPD between two GC columns exceeds 40%
Where applicable, all soil sample analysis are reported on a dry weight basis unless flagged with a "W"
N = Recovery is out of criteria
H = Out of holding time

Semivolatile Organic Compounds by GC/MS

Client: ARCADIS U.S., Inc.
Laboratory ID: LD14020-018
Description: F39TW12 (40-45)
Matrix: Aqueous
Date Sampled: 04/14/2010 1620
Date Received: 04/17/2010

Run	Prep Method	Analytical Method	Dilution	Analysis Date	Analyst	Prep Date	Batch
1	3520C	8270D	1	04/23/2010 1637	JGH	04/18/2010 1330	31716
2	3520C	8270D	1	04/29/2010 1530	WD	04/26/2010 2104	32229

Parameter	CAS Number	Analytical Method	Result	Q	PQL	MDL	Units	Run
Acenaphthene	83-32-9	8270D	ND	H	1.0	0.092	ug/L	2
Acenaphthylene	208-96-8	8270D	ND	H	1.0	0.16	ug/L	2
Acetophenone	98-86-2	8270D	ND	H	1.0	0.33	ug/L	2
Anthracene	120-12-7	8270D	ND	H	1.0	0.13	ug/L	2
Atrazine	1912-24-9	8270D	ND	H	1.0	0.20	ug/L	2
Benzaldehyde	100-52-7	8270D	ND	H	5.1	1.0	ug/L	2
Benzo(a)anthracene	56-55-3	8270D	ND	H	1.0	0.15	ug/L	2
Benzo(a)pyrene	50-32-8	8270D	ND	H	1.0	0.16	ug/L	2
Benzo(b)fluoranthene	205-99-2	8270D	ND	H	1.0	0.20	ug/L	2
Benzo(g,h,i)perylene	191-24-2	8270D	ND	H	1.0	0.23	ug/L	2
Benzo(k)fluoranthene	207-08-9	8270D	ND	H	1.0	0.12	ug/L	2
1,1'-Biphenyl	92-52-4	8270D	ND	H	1.0	0.20	ug/L	2
4-Bromophenyl phenyl ether	101-55-3	8270D	ND	H	1.0	0.12	ug/L	2
Butyl benzyl phthalate	85-68-7	8270D	ND	H	5.1	1.7	ug/L	2
Caprolactam	105-60-2	8270D	ND	H	5.1	1.2	ug/L	2
Carbazole	86-74-8	8270D	ND	H	1.0	0.26	ug/L	2
4-Chloro-3-methyl phenol	59-50-7	8270D	ND	H	1.0	0.22	ug/L	2
4-Chloroaniline	106-47-8	8270D	ND	H	1.0	0.13	ug/L	2
bis(2-Chloroethoxy)methane	111-91-1	8270D	ND	H	1.0	0.13	ug/L	2
bis(2-Chloroethyl)ether	111-44-4	8270D	ND	H	1.0	0.13	ug/L	2
bis(2-Chloroisopropyl)ether	108-60-1	8270D	ND	H	1.0	0.082	ug/L	2
2-Chloronaphthalene	91-58-7	8270D	ND	H	1.0	0.12	ug/L	2
2-Chlorophenol	95-57-8	8270D	ND	H	1.0	0.13	ug/L	2
4-Chlorophenyl phenyl ether	7005-72-3	8270D	ND	H	1.0	0.11	ug/L	2
Chrysene	218-01-9	8270D	ND	H	1.0	0.12	ug/L	2
Dibenzo(a,h)anthracene	53-70-3	8270D	ND	H	1.0	0.13	ug/L	2
Dibenzofuran	132-64-9	8270D	ND	H	1.0	0.16	ug/L	2
3,3'-Dichlorobenzidine	91-94-1	8270D	ND	H	5.1	0.83	ug/L	2
2,4-Dichlorophenol	120-83-2	8270D	ND	H	1.0	0.15	ug/L	2
Diethylphthalate	84-66-2	8270D	ND	H	5.1	1.7	ug/L	2
Dimethyl phthalate	131-11-3	8270D	ND	H	5.1	1.7	ug/L	2
2,4-Dimethylphenol	105-67-9	8270D	ND	H	1.0	0.32	ug/L	2
Di-n-butyl phthalate	84-74-2	8270D	ND	H	5.1	1.7	ug/L	2
4,6-Dinitro-2-methylphenol	534-52-1	8270D	ND	H	5.1	1.5	ug/L	2
2,4-Dinitrophenol	51-28-5	8270D	ND	H	5.1	0.26	ug/L	2
2,4-Dinitrotoluene	121-14-2	8270D	ND	H	2.0	0.46	ug/L	2
2,6-Dinitrotoluene	606-20-2	8270D	ND	H	2.0	0.41	ug/L	2
Di-n-octylphthalate	117-84-0	8270D	ND	H	5.1	1.7	ug/L	2
bis(2-Ethylhexyl)phthalate	117-81-7	8270D	ND	H	5.1	1.7	ug/L	2
Fluoranthene	206-44-0	8270D	ND	H	1.0	0.21	ug/L	2
Fluorene	86-73-7	8270D	ND	H	1.0	0.10	ug/L	2
Hexachlorobenzene	118-74-1	8270D	ND	H	1.0	0.21	ug/L	2
Hexachlorobutadiene	87-68-3	8270D	ND	H	1.0	0.092	ug/L	2

PQL = Practical quantitation limit
B = Detected in the method blank
E = Quantitation of compound exceeded the calibration range
ND = Not detected at or above the MDL
J = Estimated result < PQL and ≥ MDL
P = The RPD between two GC columns exceeds 40%
Where applicable, all soil sample analysis are reported on a dry weight basis unless flagged with a "W"
N = Recovery is out of criteria
H = Out of holding time

Semivolatile Organic Compounds by GC/MS

Client: ARCADIS U.S., Inc.
Laboratory ID: LD14020-018
Description: F39TW12 (40-45)
Matrix: Aqueous
Date Sampled: 04/14/2010 1620
Date Received: 04/17/2010

Run	Prep Method	Analytical Method	Dilution	Analysis Date	Analyst	Prep Date	Batch
1	3520C	8270D	1	04/23/2010 1637	JGH	04/18/2010 1330	31716
2	3520C	8270D	1	04/29/2010 1530	WD	04/26/2010 2104	32229

Parameter	CAS Number	Analytical Method	Result	Q	PQL	MDL	Units	Run
Hexachlorocyclopentadiene	77-47-4	8270D	ND	H	5.1	0.23	ug/L	2
Hexachloroethane	67-72-1	8270D	ND	H	1.0	0.11	ug/L	2
Indeno(1,2,3-c,d)pyrene	193-39-5	8270D	ND	H	1.0	0.23	ug/L	2
Isophorone	78-59-1	8270D	ND	H	1.0	0.082	ug/L	2
2-Methylnaphthalene	91-57-6	8270D	ND	H	1.0	0.082	ug/L	2
2-Methylphenol	95-48-7	8270D	ND	H	1.0	0.17	ug/L	2
3 & 4-Methylphenol	106-44-5	8270D	ND	H	2.0	0.58	ug/L	2
Naphthalene	91-20-3	8270D	ND	H	1.0	0.071	ug/L	2
2-Nitroaniline	88-74-4	8270D	ND	H	2.0	0.56	ug/L	2
3-Nitroaniline	99-09-2	8270D	ND	H	2.0	0.79	ug/L	2
4-Nitroaniline	100-01-6	8270D	ND	H	2.0	0.40	ug/L	2
Nitrobenzene	98-95-3	8270D	ND	H	1.0	0.10	ug/L	2
2-Nitrophenol	88-75-5	8270D	ND	H	2.0	0.28	ug/L	2
4-Nitrophenol	100-02-7	8270D	ND	H	5.1	0.65	ug/L	2
N-Nitrosodi-n-propylamine	621-64-7	8270D	ND	H	1.0	0.082	ug/L	2
N-Nitrosodiphenylamine (Diphenylamine)	86-30-6	8270D	ND	H	1.0	0.39	ug/L	2
Pentachlorophenol	87-86-5	8270D	ND	H	5.1	0.55	ug/L	2
Phenanthrene	85-01-8	8270D	ND	H	1.0	0.18	ug/L	2
Phenol	108-95-2	8270D	ND	H	1.0	0.11	ug/L	2
Pyrene	129-00-0	8270D	ND	H	1.0	0.16	ug/L	2
2,4,5-Trichlorophenol	95-95-4	8270D	ND	H	1.0	0.18	ug/L	2
2,4,6-Trichlorophenol	88-06-2	8270D	ND	H	1.0	0.22	ug/L	2

Surrogate	Q	Run 1 % Recovery	Acceptance Limits	Q	Run 2 % Recovery	Acceptance Limits
2-Fluorobiphenyl		65	37-129	H	44	37-129
2-Fluorophenol		64	24-127	H	58	24-127
Nitrobenzene-d5		74	38-127	H	45	38-127
Phenol-d5		70	28-128	H	51	28-128
Terphenyl-d14	N	7.0	10-148	HN	8.1	10-148
2,4,6-Tribromophenol		54	41-144	H	53	41-144

PQL = Practical quantitation limit
B = Detected in the method blank
E = Quantitation of compound exceeded the calibration range
ND = Not detected at or above the MDL
J = Estimated result < PQL and ≥ MDL
P = The RPD between two GC columns exceeds 40%
Where applicable, all soil sample analysis are reported on a dry weight basis unless flagged with a "W"
N = Recovery is out of criteria
H = Out of holding time

Volatile Organic Compounds by GC/MS

Client: ARCADIS U.S., Inc.
Laboratory ID: LD14020-019
Description: TRIP BLANK
Matrix: Aqueous
Date Sampled: 04/17/2010 0950
Date Received: 04/17/2010

Run	Prep Method	Analytical Method	Dilution	Analysis Date	Analyst	Prep Date	Batch
1	5030B	8260B	1	04/22/2010 0104	DLB		31987

Parameter	CAS Number	Analytical Method	Result	Q	PQL	MDL	Units	Run
Acetone	67-64-1	8260B	1.2	BJ	10	0.061	ug/L	1
Benzene	71-43-2	8260B	ND		0.50	0.027	ug/L	1
Bromodichloromethane	75-27-4	8260B	ND		0.50	0.17	ug/L	1
Bromoform	75-25-2	8260B	ND		0.50	0.010	ug/L	1
Bromomethane (Methyl bromide)	74-83-9	8260B	ND		0.50	0.20	ug/L	1
2-Butanone (MEK)	78-93-3	8260B	ND		10	2.0	ug/L	1
Carbon disulfide	75-15-0	8260B	0.38	J	0.50	0.097	ug/L	1
Carbon tetrachloride	56-23-5	8260B	ND		0.50	0.085	ug/L	1
Chlorobenzene	108-90-7	8260B	ND		0.50	0.17	ug/L	1
Chloroethane	75-00-3	8260B	ND		0.50	0.17	ug/L	1
Chloroform	67-66-3	8260B	ND		0.50	0.17	ug/L	1
Chloromethane (Methyl chloride)	74-87-3	8260B	ND		0.50	0.17	ug/L	1
Cyclohexane	110-82-7	8260B	ND		0.50	0.30	ug/L	1
1,2-Dibromo-3-chloropropane (DBCP)	96-12-8	8260B	ND		0.50	0.069	ug/L	1
Dibromochloromethane	124-48-1	8260B	ND		0.50	0.17	ug/L	1
1,2-Dibromoethane (EDB)	106-93-4	8260B	ND		0.50	0.061	ug/L	1
1,3-Dichlorobenzene	541-73-1	8260B	ND		0.50	0.17	ug/L	1
1,2-Dichlorobenzene	95-50-1	8260B	ND		0.50	0.17	ug/L	1
1,4-Dichlorobenzene	106-46-7	8260B	ND		0.50	0.17	ug/L	1
Dichlorodifluoromethane	75-71-8	8260B	ND		0.50	0.071	ug/L	1
1,1-Dichloroethane	75-34-3	8260B	ND		0.50	0.054	ug/L	1
1,2-Dichloroethane	107-06-2	8260B	ND		0.50	0.023	ug/L	1
trans-1,2-Dichloroethene	156-60-5	8260B	ND		0.50	0.079	ug/L	1
1,1-Dichloroethene	75-35-4	8260B	ND		0.50	0.094	ug/L	1
cis-1,2-Dichloroethene	156-59-2	8260B	ND		0.50	0.087	ug/L	1
1,2-Dichloropropane	78-87-5	8260B	ND		0.50	0.081	ug/L	1
trans-1,3-Dichloropropene	10061-02-6	8260B	ND		0.50	0.18	ug/L	1
cis-1,3-Dichloropropene	10061-01-5	8260B	ND		0.50	0.090	ug/L	1
Ethylbenzene	100-41-4	8260B	ND		0.50	0.17	ug/L	1
2-Hexanone	591-78-6	8260B	ND		10	0.27	ug/L	1
Isopropylbenzene	98-82-8	8260B	ND		0.50	0.029	ug/L	1
Methyl acetate	79-20-9	8260B	ND		1.0	0.30	ug/L	1
Methyl tertiary butyl ether (MTBE)	1634-04-4	8260B	ND		0.50	0.019	ug/L	1
4-Methyl-2-pentanone	108-10-1	8260B	ND		10	0.31	ug/L	1
Methylcyclohexane	108-87-2	8260B	ND		5.0	0.95	ug/L	1
Methylene chloride	75-09-2	8260B	ND		0.50	0.17	ug/L	1
Styrene	100-42-5	8260B	ND		0.50	0.015	ug/L	1
1,1,2,2-Tetrachloroethane	79-34-5	8260B	ND		0.50	0.013	ug/L	1
Tetrachloroethene	127-18-4	8260B	ND		0.50	0.014	ug/L	1
Toluene	108-88-3	8260B	ND		0.50	0.17	ug/L	1
1,1,2-Trichloro-1,2,2-Trifluoroethane	76-13-1	8260B	ND		0.50	0.30	ug/L	1
1,2,4-Trichlorobenzene	120-82-1	8260B	ND		0.50	0.17	ug/L	1
1,1,1-Trichloroethane	71-55-6	8260B	ND		0.50	0.029	ug/L	1
1,1,2-Trichloroethane	79-00-5	8260B	ND		0.50	0.031	ug/L	1

PQL = Practical quantitation limit
B = Detected in the method blank
E = Quantitation of compound exceeded the calibration range
ND = Not detected at or above the MDL
J = Estimated result < PQL and ≥ MDL
P = The RPD between two GC columns exceeds 40%
Where applicable, all soil sample analysis are reported on a dry weight basis unless flagged with a "W"
N = Recovery is out of criteria
H = Out of holding time

Volatile Organic Compounds by GC/MS

Client: ARCADIS U.S., Inc.
Laboratory ID: LD14020-019
Description: TRIP BLANK
Matrix: Aqueous
Date Sampled: 04/17/2010 0950
Date Received: 04/17/2010

Run	Prep Method	Analytical Method	Dilution	Analysis Date	Analyst	Prep Date	Batch
1	5030B	8260B	1	04/22/2010 0104	DLB		31987

Parameter	CAS Number	Analytical Method	Result	Q	PQL	MDL	Units	Run
Trichloroethene	79-01-6	8260B	ND		0.50	0.024	ug/L	1
Trichlorofluoromethane	75-69-4	8260B	ND		0.50	0.051	ug/L	1
Vinyl chloride	75-01-4	8260B	0.16	J	0.50	0.065	ug/L	1
Xylenes (total)	1330-20-7	8260B	ND		0.50	0.17	ug/L	1

Surrogate	Q	Run 1 % Recovery	Acceptance Limits
1,2-Dichloroethane-d4		95	70-130
Bromofluorobenzene		93	70-130
Toluene-d8		97	70-130

PQL = Practical quantitation limit
B = Detected in the method blank
E = Quantitation of compound exceeded the calibration range
ND = Not detected at or above the MDL
J = Estimated result < PQL and ≥ MDL
P = The RPD between two GC columns exceeds 40%
Where applicable, all soil sample analysis are reported on a dry weight basis unless flagged with a "W"
N = Recovery is out of criteria
H = Out of holding time

QC Summary

Volatile Organic Compounds by GC/MS - MB

Sample ID: LQ31703-001
Batch: 31703
Analytical Method: 8260B

Matrix: Aqueous
Prep Method: 5030B

Parameter	Result	Q	Dil	PQL	MDL	Units	Analysis Date
Acetone	ND		1	10	0.061	ug/L	04/16/2010 2341
Benzene	ND		1	0.50	0.027	ug/L	04/16/2010 2341
Bromodichloromethane	ND		1	0.50	0.17	ug/L	04/16/2010 2341
Bromoform	ND		1	0.50	0.010	ug/L	04/16/2010 2341
Bromomethane (Methyl bromide)	ND		1	0.50	0.20	ug/L	04/16/2010 2341
2-Butanone (MEK)	ND		1	10	2.0	ug/L	04/16/2010 2341
Carbon disulfide	ND		1	0.50	0.097	ug/L	04/16/2010 2341
Carbon tetrachloride	ND		1	0.50	0.085	ug/L	04/16/2010 2341
Chlorobenzene	ND		1	0.50	0.17	ug/L	04/16/2010 2341
Chloroethane	ND		1	0.50	0.17	ug/L	04/16/2010 2341
Chloroform	ND		1	0.50	0.17	ug/L	04/16/2010 2341
Chloromethane (Methyl chloride)	ND		1	0.50	0.17	ug/L	04/16/2010 2341
Cyclohexane	ND		1	0.50	0.30	ug/L	04/16/2010 2341
1,2-Dibromo-3-chloropropane (DBCP)	ND		1	0.50	0.069	ug/L	04/16/2010 2341
Dibromochloromethane	ND		1	0.50	0.17	ug/L	04/16/2010 2341
1,2-Dibromoethane (EDB)	ND		1	0.50	0.061	ug/L	04/16/2010 2341
1,2-Dichlorobenzene	ND		1	0.50	0.17	ug/L	04/16/2010 2341
1,4-Dichlorobenzene	ND		1	0.50	0.17	ug/L	04/16/2010 2341
1,3-Dichlorobenzene	ND		1	0.50	0.17	ug/L	04/16/2010 2341
Dichlorodifluoromethane	ND		1	0.50	0.071	ug/L	04/16/2010 2341
1,1-Dichloroethane	ND		1	0.50	0.054	ug/L	04/16/2010 2341
1,2-Dichloroethane	ND		1	0.50	0.023	ug/L	04/16/2010 2341
1,1-Dichloroethene	ND		1	0.50	0.094	ug/L	04/16/2010 2341
trans-1,2-Dichloroethene	ND		1	0.50	0.079	ug/L	04/16/2010 2341
cis-1,2-Dichloroethene	ND		1	0.50	0.087	ug/L	04/16/2010 2341
1,2-Dichloropropane	ND		1	0.50	0.081	ug/L	04/16/2010 2341
trans-1,3-Dichloropropene	ND		1	0.50	0.18	ug/L	04/16/2010 2341
cis-1,3-Dichloropropene	ND		1	0.50	0.090	ug/L	04/16/2010 2341
Ethylbenzene	ND		1	0.50	0.17	ug/L	04/16/2010 2341
2-Hexanone	ND		1	10	0.27	ug/L	04/16/2010 2341
Isopropylbenzene	ND		1	0.50	0.029	ug/L	04/16/2010 2341
Methyl acetate	ND		1	1.0	0.30	ug/L	04/16/2010 2341
Methyl tertiary butyl ether (MTBE)	ND		1	0.50	0.019	ug/L	04/16/2010 2341
4-Methyl-2-pentanone	ND		1	10	0.31	ug/L	04/16/2010 2341
Methylcyclohexane	ND		1	5.0	0.95	ug/L	04/16/2010 2341
Methylene chloride	0.25	J	1	0.50	0.17	ug/L	04/16/2010 2341
Styrene	ND		1	0.50	0.015	ug/L	04/16/2010 2341
1,1,2,2-Tetrachloroethane	ND		1	0.50	0.013	ug/L	04/16/2010 2341
Tetrachloroethene	ND		1	0.50	0.014	ug/L	04/16/2010 2341
Toluene	ND		1	0.50	0.17	ug/L	04/16/2010 2341
1,1,2-Trichloro-1,2,2-Trifluoroethane	ND		1	0.50	0.30	ug/L	04/16/2010 2341
1,2,4-Trichlorobenzene	ND		1	0.50	0.17	ug/L	04/16/2010 2341
1,1,1-Trichloroethane	ND		1	0.50	0.029	ug/L	04/16/2010 2341
1,1,2-Trichloroethane	ND		1	0.50	0.031	ug/L	04/16/2010 2341

PQL = Practical quantitation limit
ND = Not detected at or above the MDL
P = The RPD between two GC columns exceeds 40%
J = Estimated result < PQL and ≥ MDL
N - Recovery is out of criteria
+ - RPD is out of criteria

Where applicable, all soil sample analysis are reported on a dry weight basis unless flagged with a "W"

Note: Calculations are performed before rounding to avoid round-off errors in calculated results

Volatile Organic Compounds by GC/MS - MB

Sample ID: LQ31703-001
Batch: 31703
Analytical Method: 8260B

Matrix: Aqueous
Prep Method: 5030B

Parameter	Result	Q	Dil	PQL	MDL	Units	Analysis Date
Trichloroethene	ND		1	0.50	0.024	ug/L	04/16/2010 2341
Trichlorofluoromethane	ND		1	0.50	0.051	ug/L	04/16/2010 2341
Vinyl chloride	ND		1	0.50	0.065	ug/L	04/16/2010 2341
Xylenes (total)	ND		1	0.50	0.17	ug/L	04/16/2010 2341

Surrogate	Q	% Rec	Acceptance Limit
Bromofluorobenzene		91	70-130
1,2-Dichloroethane-d4		104	70-130
Toluene-d8		108	70-130

PQL = Practical quantitation limit
ND = Not detected at or above the MDL
P = The RPD between two GC columns exceeds 40%
J = Estimated result < PQL and ≥ MDL
N - Recovery is out of criteria
+ - RPD is out of criteria

Where applicable, all soil sample analysis are reported on a dry weight basis unless flagged with a "W"

Note: Calculations are performed before rounding to avoid round-off errors in calculated results

Volatile Organic Compounds by GC/MS - LCS

Sample ID: LQ31703-002
Batch: 31703
Analytical Method: 8260B

Matrix: Aqueous
Prep Method: 5030B

Parameter	Spike Amount (ug/L)	Result (ug/L)	Q	Dil	% Rec	% Rec Limit	Analysis Date
Acetone	100	100		1	104	46-153	04/16/2010 2214
Benzene	50	54		1	108	70-130	04/16/2010 2214
Bromodichloromethane	50	51		1	102	70-130	04/16/2010 2214
Bromoform	50	49		1	99	70-130	04/16/2010 2214
Bromomethane (Methyl bromide)	50	50		1	101	60-140	04/16/2010 2214
2-Butanone (MEK)	100	100		1	104	60-140	04/16/2010 2214
Carbon disulfide	50	64		1	129	60-140	04/16/2010 2214
Carbon tetrachloride	50	58		1	117	70-130	04/16/2010 2214
Chlorobenzene	50	51		1	103	70-130	04/16/2010 2214
Chloroethane	50	45		1	90	42-163	04/16/2010 2214
Chloroform	50	55		1	109	70-130	04/16/2010 2214
Chloromethane (Methyl chloride)	50	44		1	87	20-158	04/16/2010 2214
Cyclohexane	50	57		1	114	70-130	04/16/2010 2214
1,2-Dibromo-3-chloropropane (DBCP)	50	50		1	99	70-130	04/16/2010 2214
Dibromochloromethane	50	50		1	100	70-130	04/16/2010 2214
1,2-Dibromoethane (EDB)	50	49		1	99	70-130	04/16/2010 2214
1,2-Dichlorobenzene	50	51		1	102	70-130	04/16/2010 2214
1,4-Dichlorobenzene	50	51		1	102	70-130	04/16/2010 2214
1,3-Dichlorobenzene	50	52		1	104	70-130	04/16/2010 2214
Dichlorodifluoromethane	50	52		1	104	60-140	04/16/2010 2214
1,1-Dichloroethane	50	55		1	110	70-130	04/16/2010 2214
1,2-Dichloroethane	50	53		1	106	70-130	04/16/2010 2214
1,1-Dichloroethene	50	56		1	111	70-130	04/16/2010 2214
trans-1,2-Dichloroethene	50	56		1	112	70-130	04/16/2010 2214
cis-1,2-Dichloroethene	50	56		1	111	70-130	04/16/2010 2214
1,2-Dichloropropane	50	55		1	110	70-130	04/16/2010 2214
trans-1,3-Dichloropropene	50	49		1	98	70-130	04/16/2010 2214
cis-1,3-Dichloropropene	50	52		1	105	70-130	04/16/2010 2214
Ethylbenzene	50	53		1	105	70-130	04/16/2010 2214
2-Hexanone	100	99		1	99	60-140	04/16/2010 2214
Isopropylbenzene	50	58		1	117	70-130	04/16/2010 2214
Methyl acetate	50	57		1	114	15-128	04/16/2010 2214
Methyl tertiary butyl ether (MTBE)	50	56		1	111	70-130	04/16/2010 2214
4-Methyl-2-pentanone	100	100		1	104	60-140	04/16/2010 2214
Methylcyclohexane	50	58		1	116	70-130	04/16/2010 2214
Methylene chloride	50	51		1	102	70-130	04/16/2010 2214
Styrene	50	48		1	95	70-130	04/16/2010 2214
1,1,2,2-Tetrachloroethane	50	58		1	115	70-130	04/16/2010 2214
Tetrachloroethene	50	50		1	101	70-130	04/16/2010 2214
Toluene	50	55		1	111	70-130	04/16/2010 2214
1,1,2-Trichloro-1,2,2-Trifluoroethane	50	49		1	98	70-130	04/16/2010 2214
1,2,4-Trichlorobenzene	50	53		1	106	70-130	04/16/2010 2214
1,1,1-Trichloroethane	50	57		1	115	70-130	04/16/2010 2214
1,1,2-Trichloroethane	50	51		1	102	70-130	04/16/2010 2214

PQL = Practical quantitation limit
ND = Not detected at or above the MDL
P = The RPD between two GC columns exceeds 40%
J = Estimated result < PQL and ≥ MDL
N - Recovery is out of criteria
+ - RPD is out of criteria

Where applicable, all soil sample analysis are reported on a dry weight basis unless flagged with a "W"

Note: Calculations are performed before rounding to avoid round-off errors in calculated results

Volatile Organic Compounds by GC/MS - LCS

Sample ID: LQ31703-002
Batch: 31703
Analytical Method: 8260B

Matrix: Aqueous
Prep Method: 5030B

Parameter	Spike Amount (ug/L)	Result (ug/L)	Q	Dil	% Rec	% Rec Limit	Analysis Date
Trichloroethene	50	53		1	107	70-130	04/16/2010 2214
Trichlorofluoromethane	50	53		1	106	60-140	04/16/2010 2214
Vinyl chloride	50	51		1	103	60-140	04/16/2010 2214
Xylenes (total)	100	100		1	102	70-130	04/16/2010 2214

Surrogate	Q	% Rec	Acceptance Limit
Bromofluorobenzene		98	70-130
1,2-Dichloroethane-d4		103	70-130
Toluene-d8		112	70-130

PQL = Practical quantitation limit
ND = Not detected at or above the MDL
P = The RPD between two GC columns exceeds 40%
J = Estimated result < PQL and ≥ MDL
N - Recovery is out of criteria
+ - RPD is out of criteria

Where applicable, all soil sample analysis are reported on a dry weight basis unless flagged with a "W"

Note: Calculations are performed before rounding to avoid round-off errors in calculated results

Volatile Organic Compounds by GC/MS - LCSD

Sample ID: LQ31703-003
Batch: 31703
Analytical Method: 8260B

Matrix: Aqueous
Prep Method: 5030B

Parameter	Spike Amount (ug/L)	Result (ug/L)	Q	Dil	% Rec	% RPD	% Rec Limit	% RPD Limit	Analysis Date
Acetone	100	110		1	112	7.9	46-153	20	04/16/2010 2236
Benzene	50	50		1	100	7.6	70-130	20	04/16/2010 2236
Bromodichloromethane	50	48		1	96	6.0	70-130	20	04/16/2010 2236
Bromoform	50	48		1	97	2.3	70-130	20	04/16/2010 2236
Bromomethane (Methyl bromide)	50	46		1	92	8.8	60-140	20	04/16/2010 2236
2-Butanone (MEK)	100	100		1	100	3.2	60-140	20	04/16/2010 2236
Carbon disulfide	50	57		1	114	12	60-140	20	04/16/2010 2236
Carbon tetrachloride	50	52		1	103	12	70-130	20	04/16/2010 2236
Chlorobenzene	50	48		1	97	6.0	70-130	20	04/16/2010 2236
Chloroethane	50	43		1	87	4.0	42-163	20	04/16/2010 2236
Chloroform	50	51		1	102	7.3	70-130	20	04/16/2010 2236
Chloromethane (Methyl chloride)	50	39		1	78	11	20-158	20	04/16/2010 2236
Cyclohexane	50	49		1	99	14	70-130	20	04/16/2010 2236
1,2-Dibromo-3-chloropropane (DBCP)	50	46		1	92	7.0	70-130	20	04/16/2010 2236
Dibromochloromethane	50	48		1	96	4.0	70-130	20	04/16/2010 2236
1,2-Dibromoethane (EDB)	50	48		1	96	3.2	70-130	20	04/16/2010 2236
1,2-Dichlorobenzene	50	48		1	97	5.3	70-130	20	04/16/2010 2236
1,4-Dichlorobenzene	50	48		1	97	5.2	70-130	20	04/16/2010 2236
1,3-Dichlorobenzene	50	49		1	98	5.8	70-130	20	04/16/2010 2236
Dichlorodifluoromethane	50	45		1	91	13	60-140	20	04/16/2010 2236
1,1-Dichloroethane	50	50		1	101	8.7	70-130	20	04/16/2010 2236
1,2-Dichloroethane	50	50		1	100	5.9	70-130	20	04/16/2010 2236
1,1-Dichloroethene	50	50		1	99	12	70-130	20	04/16/2010 2236
trans-1,2-Dichloroethene	50	50		1	101	11	70-130	20	04/16/2010 2236
cis-1,2-Dichloroethene	50	51		1	102	8.7	70-130	20	04/16/2010 2236
1,2-Dichloropropane	50	52		1	104	6.2	70-130	20	04/16/2010 2236
trans-1,3-Dichloropropene	50	47		1	95	3.6	70-130	20	04/16/2010 2236
cis-1,3-Dichloropropene	50	50		1	100	4.9	70-130	20	04/16/2010 2236
Ethylbenzene	50	49		1	99	6.2	70-130	20	04/16/2010 2236
2-Hexanone	100	97		1	97	2.2	60-140	20	04/16/2010 2236
Isopropylbenzene	50	53		1	107	9.2	70-130	20	04/16/2010 2236
Methyl acetate	50	53		1	107	6.8	15-128	20	04/16/2010 2236
Methyl tertiary butyl ether (MTBE)	50	52		1	105	6.2	70-130	20	04/16/2010 2236
4-Methyl-2-pentanone	100	98		1	98	6.0	60-140	20	04/16/2010 2236
Methylcyclohexane	50	51		1	102	13	70-130	20	04/16/2010 2236
Methylene chloride	50	47		1	95	7.3	70-130	20	04/16/2010 2236
Styrene	50	45		1	90	5.2	70-130	20	04/16/2010 2236
1,1,2,2-Tetrachloroethane	50	54		1	108	6.8	70-130	20	04/16/2010 2236
Tetrachloroethene	50	47		1	93	7.7	70-130	20	04/16/2010 2236
Toluene	50	52		1	104	6.0	70-130	20	04/16/2010 2236
1,1,2-Trichloro-1,2,2-Trifluoroethane	50	43		1	86	14	70-130	20	04/16/2010 2236
1,2,4-Trichlorobenzene	50	51		1	102	4.0	70-130	20	04/16/2010 2236
1,1,1-Trichloroethane	50	52		1	103	11	70-130	20	04/16/2010 2236
1,1,2-Trichloroethane	50	49		1	98	3.9	70-130	20	04/16/2010 2236

PQL = Practical quantitation limit
ND = Not detected at or above the MDL
P = The RPD between two GC columns exceeds 40%
J = Estimated result < PQL and ≥ MDL
N - Recovery is out of criteria
+ - RPD is out of criteria

Where applicable, all soil sample analysis are reported on a dry weight basis unless flagged with a "W"

Note: Calculations are performed before rounding to avoid round-off errors in calculated results

Volatile Organic Compounds by GC/MS - LCSD

Sample ID: LQ31703-003
Batch: 31703
Analytical Method: 8260B

Matrix: Aqueous
Prep Method: 5030B

Parameter	Spike Amount (ug/L)	Result (ug/L)	Q	Dil	% Rec	% RPD	% Rec Limit	% RPD Limit	Analysis Date
Trichloroethene	50	49		1	99	7.7	70-130	20	04/16/2010 2236
Trichlorofluoromethane	50	46		1	91	15	60-140	20	04/16/2010 2236
Vinyl chloride	50	46		1	91	12	60-140	20	04/16/2010 2236
Xylenes (total)	100	95		1	95	6.6	70-130	20	04/16/2010 2236

Surrogate	Q	% Rec	Acceptance Limit
Bromofluorobenzene		97	70-130
1,2-Dichloroethane-d4		101	70-130
Toluene-d8		110	70-130

PQL = Practical quantitation limit
ND = Not detected at or above the MDL
P = The RPD between two GC columns exceeds 40%
J = Estimated result < PQL and ≥ MDL
N - Recovery is out of criteria
+ - RPD is out of criteria

Where applicable, all soil sample analysis are reported on a dry weight basis unless flagged with a "W"

Note: Calculations are performed before rounding to avoid round-off errors in calculated results

Volatile Organic Compounds by GC/MS - MB

Sample ID: LQ31838-001
Batch: 31838
Analytical Method: 8260B

Matrix: Aqueous
Prep Method: 5030B

Parameter	Result	Q	Dil	PQL	MDL	Units	Analysis Date
cis-1,2-Dichloroethene	ND		1	0.50	0.087	ug/L	04/19/2010 1245
Trichloroethene	ND		1	0.50	0.024	ug/L	04/19/2010 1245

Surrogate	Q	% Rec	Acceptance Limit
Bromofluorobenzene		91	70-130
1,2-Dichloroethane-d4		94	70-130
Toluene-d8		105	70-130

PQL = Practical quantitation limit
ND = Not detected at or above the MDL
P = The RPD between two GC columns exceeds 40%
J = Estimated result < PQL and ≥ MDL
N - Recovery is out of criteria
+ - RPD is out of criteria

Where applicable, all soil sample analysis are reported on a dry weight basis unless flagged with a "W"

Note: Calculations are performed before rounding to avoid round-off errors in calculated results

Volatile Organic Compounds by GC/MS - LCS

Sample ID: LQ31838-002
Batch: 31838
Analytical Method: 8260B

Matrix: Aqueous
Prep Method: 5030B

Parameter	Spike Amount (ug/L)	Result (ug/L)	Q	Dil	% Rec	% Rec Limit	Analysis Date
cis-1,2-Dichloroethene	50	41		1	83	70-130	04/19/2010 1117
Trichloroethene	50	40		1	81	70-130	04/19/2010 1117

Surrogate	Q	% Rec	Acceptance Limit
Bromofluorobenzene		92	70-130
1,2-Dichloroethane-d4		87	70-130
Toluene-d8		102	70-130

PQL = Practical quantitation limit
ND = Not detected at or above the MDL
P = The RPD between two GC columns exceeds 40%
J = Estimated result < PQL and ≥ MDL
N - Recovery is out of criteria
+ - RPD is out of criteria

Where applicable, all soil sample analysis are reported on a dry weight basis unless flagged with a "W"

Note: Calculations are performed before rounding to avoid round-off errors in calculated results

Volatile Organic Compounds by GC/MS - LCSD

Sample ID: LQ31838-003
Batch: 31838
Analytical Method: 8260B

Matrix: Aqueous
Prep Method: 5030B

Parameter	Spike Amount (ug/L)	Result (ug/L)	Q	Dil	% Rec	% RPD	% Rec Limit	% RPD Limit	Analysis Date
cis-1,2-Dichloroethene	50	40		1	79	4.4	70-130	20	04/19/2010 1139
Trichloroethene	50	40		1	80	1.7	70-130	20	04/19/2010 1139

Surrogate	Q	% Rec	Acceptance Limit
Bromofluorobenzene		92	70-130
1,2-Dichloroethane-d4		85	70-130
Toluene-d8		101	70-130

PQL = Practical quantitation limit
ND = Not detected at or above the MDL
P = The RPD between two GC columns exceeds 40%
J = Estimated result < PQL and ≥ MDL
N - Recovery is out of criteria
+ - RPD is out of criteria

Where applicable, all soil sample analysis are reported on a dry weight basis unless flagged with a "W"

Note: Calculations are performed before rounding to avoid round-off errors in calculated results

Volatile Organic Compounds by GC/MS - MB

Sample ID: LQ31987-001
Batch: 31987
Analytical Method: 8260B

Matrix: Aqueous
Prep Method: 5030B

Parameter	Result	Q	Dil	PQL	MDL	Units	Analysis Date
Acetone	0.51	J	1	10	0.061	ug/L	04/22/2010 0005
Benzene	ND		1	0.50	0.027	ug/L	04/22/2010 0005
Bromodichloromethane	ND		1	0.50	0.17	ug/L	04/22/2010 0005
Bromoform	ND		1	0.50	0.010	ug/L	04/22/2010 0005
Bromomethane (Methyl bromide)	ND		1	0.50	0.20	ug/L	04/22/2010 0005
2-Butanone (MEK)	ND		1	10	2.0	ug/L	04/22/2010 0005
Carbon disulfide	ND		1	0.50	0.097	ug/L	04/22/2010 0005
Carbon tetrachloride	ND		1	0.50	0.085	ug/L	04/22/2010 0005
Chlorobenzene	ND		1	0.50	0.17	ug/L	04/22/2010 0005
Chloroethane	ND		1	0.50	0.17	ug/L	04/22/2010 0005
Chloroform	ND		1	0.50	0.17	ug/L	04/22/2010 0005
Chloromethane (Methyl chloride)	ND		1	0.50	0.17	ug/L	04/22/2010 0005
Cyclohexane	ND		1	0.50	0.30	ug/L	04/22/2010 0005
1,2-Dibromo-3-chloropropane (DBCP)	ND		1	0.50	0.069	ug/L	04/22/2010 0005
Dibromochloromethane	ND		1	0.50	0.17	ug/L	04/22/2010 0005
1,2-Dibromoethane (EDB)	ND		1	0.50	0.061	ug/L	04/22/2010 0005
1,4-Dichlorobenzene	ND		1	0.50	0.17	ug/L	04/22/2010 0005
1,3-Dichlorobenzene	ND		1	0.50	0.17	ug/L	04/22/2010 0005
1,2-Dichlorobenzene	ND		1	0.50	0.17	ug/L	04/22/2010 0005
Dichlorodifluoromethane	ND		1	0.50	0.071	ug/L	04/22/2010 0005
1,2-Dichloroethane	ND		1	0.50	0.023	ug/L	04/22/2010 0005
1,1-Dichloroethane	ND		1	0.50	0.054	ug/L	04/22/2010 0005
1,1-Dichloroethene	ND		1	0.50	0.094	ug/L	04/22/2010 0005
cis-1,2-Dichloroethene	ND		1	0.50	0.087	ug/L	04/22/2010 0005
trans-1,2-Dichloroethene	ND		1	0.50	0.079	ug/L	04/22/2010 0005
1,2-Dichloropropane	ND		1	0.50	0.081	ug/L	04/22/2010 0005
trans-1,3-Dichloropropene	ND		1	0.50	0.18	ug/L	04/22/2010 0005
cis-1,3-Dichloropropene	ND		1	0.50	0.090	ug/L	04/22/2010 0005
Ethylbenzene	ND		1	0.50	0.17	ug/L	04/22/2010 0005
2-Hexanone	ND		1	10	0.27	ug/L	04/22/2010 0005
Isopropylbenzene	ND		1	0.50	0.029	ug/L	04/22/2010 0005
Methyl acetate	ND		1	1.0	0.30	ug/L	04/22/2010 0005
Methyl tertiary butyl ether (MTBE)	ND		1	0.50	0.019	ug/L	04/22/2010 0005
4-Methyl-2-pentanone	ND		1	10	0.31	ug/L	04/22/2010 0005
Methylcyclohexane	ND		1	5.0	0.95	ug/L	04/22/2010 0005
Methylene chloride	ND		1	0.50	0.17	ug/L	04/22/2010 0005
Styrene	ND		1	0.50	0.015	ug/L	04/22/2010 0005
1,1,2,2-Tetrachloroethane	ND		1	0.50	0.013	ug/L	04/22/2010 0005
Tetrachloroethene	ND		1	0.50	0.014	ug/L	04/22/2010 0005
Toluene	ND		1	0.50	0.17	ug/L	04/22/2010 0005
1,1,2-Trichloro-1,2,2-Trifluoroethane	ND		1	0.50	0.30	ug/L	04/22/2010 0005
1,2,4-Trichlorobenzene	ND		1	0.50	0.17	ug/L	04/22/2010 0005
1,1,1-Trichloroethane	ND		1	0.50	0.029	ug/L	04/22/2010 0005
1,1,2-Trichloroethane	ND		1	0.50	0.031	ug/L	04/22/2010 0005

PQL = Practical quantitation limit
ND = Not detected at or above the MDL
P = The RPD between two GC columns exceeds 40%
J = Estimated result < PQL and ≥ MDL
N - Recovery is out of criteria
+ - RPD is out of criteria

Where applicable, all soil sample analysis are reported on a dry weight basis unless flagged with a "W"

Note: Calculations are performed before rounding to avoid round-off errors in calculated results

Volatile Organic Compounds by GC/MS - MB

Sample ID: LQ31987-001
Batch: 31987
Analytical Method: 8260B

Matrix: Aqueous
Prep Method: 5030B

Parameter	Result	Q	Dil	PQL	MDL	Units	Analysis Date
Trichloroethene	ND		1	0.50	0.024	ug/L	04/22/2010 0005
Trichlorofluoromethane	ND		1	0.50	0.051	ug/L	04/22/2010 0005
Vinyl chloride	ND		1	0.50	0.065	ug/L	04/22/2010 0005
Xylenes (total)	ND		1	0.50	0.17	ug/L	04/22/2010 0005

Surrogate	Q	% Rec	Acceptance Limit
Bromofluorobenzene		97	70-130
1,2-Dichloroethane-d4		96	70-130
Toluene-d8		99	70-130

PQL = Practical quantitation limit
ND = Not detected at or above the MDL
P = The RPD between two GC columns exceeds 40%
J = Estimated result < PQL and ≥ MDL
N - Recovery is out of criteria
+ - RPD is out of criteria

Where applicable, all soil sample analysis are reported on a dry weight basis unless flagged with a "W"

Note: Calculations are performed before rounding to avoid round-off errors in calculated results

Volatile Organic Compounds by GC/MS - LCS

Sample ID: LQ31987-002
Batch: 31987
Analytical Method: 8260B

Matrix: Aqueous
Prep Method: 5030B

Parameter	Spike Amount (ug/L)	Result (ug/L)	Q	Dil	% Rec	% Rec Limit	Analysis Date
Acetone	100	110		1	108	46-153	04/21/2010 2240
Benzene	50	53		1	107	70-130	04/21/2010 2240
Bromodichloromethane	50	55		1	110	70-130	04/21/2010 2240
Bromoform	50	44		1	88	70-130	04/21/2010 2240
Bromomethane (Methyl bromide)	50	46		1	91	60-140	04/21/2010 2240
2-Butanone (MEK)	100	110		1	106	60-140	04/21/2010 2240
Carbon disulfide	50	51		1	101	60-140	04/21/2010 2240
Carbon tetrachloride	50	53		1	106	70-130	04/21/2010 2240
Chlorobenzene	50	53		1	105	70-130	04/21/2010 2240
Chloroethane	50	46		1	93	42-163	04/21/2010 2240
Chloroform	50	53		1	106	70-130	04/21/2010 2240
Chloromethane (Methyl chloride)	50	50		1	100	20-158	04/21/2010 2240
Cyclohexane	50	54		1	108	70-130	04/21/2010 2240
1,2-Dibromo-3-chloropropane (DBCP)	50	54		1	108	70-130	04/21/2010 2240
Dibromochloromethane	50	62		1	124	70-130	04/21/2010 2240
1,2-Dibromoethane (EDB)	50	57		1	114	70-130	04/21/2010 2240
1,4-Dichlorobenzene	50	53		1	106	70-130	04/21/2010 2240
1,3-Dichlorobenzene	50	53		1	105	70-130	04/21/2010 2240
1,2-Dichlorobenzene	50	52		1	105	70-130	04/21/2010 2240
Dichlorodifluoromethane	50	57		1	113	60-140	04/21/2010 2240
1,2-Dichloroethane	50	52		1	105	70-130	04/21/2010 2240
1,1-Dichloroethane	50	52		1	103	70-130	04/21/2010 2240
1,1-Dichloroethene	50	50		1	101	70-130	04/21/2010 2240
cis-1,2-Dichloroethene	50	52		1	103	70-130	04/21/2010 2240
trans-1,2-Dichloroethene	50	51		1	102	70-130	04/21/2010 2240
1,2-Dichloropropane	50	52		1	105	70-130	04/21/2010 2240
trans-1,3-Dichloropropene	50	55		1	110	70-130	04/21/2010 2240
cis-1,3-Dichloropropene	50	56		1	111	70-130	04/21/2010 2240
Ethylbenzene	50	53		1	106	70-130	04/21/2010 2240
2-Hexanone	100	110		1	114	60-140	04/21/2010 2240
Isopropylbenzene	50	56		1	113	70-130	04/21/2010 2240
Methyl acetate	50	58		1	117	15-128	04/21/2010 2240
Methyl tertiary butyl ether (MTBE)	50	50		1	100	70-130	04/21/2010 2240
4-Methyl-2-pentanone	100	110		1	108	60-140	04/21/2010 2240
Methylcyclohexane	50	56		1	111	70-130	04/21/2010 2240
Methylene chloride	50	51		1	103	70-130	04/21/2010 2240
Styrene	50	49		1	99	70-130	04/21/2010 2240
1,1,2,2-Tetrachloroethane	50	59		1	118	70-130	04/21/2010 2240
Tetrachloroethene	50	55		1	110	70-130	04/21/2010 2240
Toluene	50	54		1	107	70-130	04/21/2010 2240
1,1,2-Trichloro-1,2,2-Trifluoroethane	50	48		1	97	70-130	04/21/2010 2240
1,2,4-Trichlorobenzene	50	61		1	121	70-130	04/21/2010 2240
1,1,1-Trichloroethane	50	53		1	105	70-130	04/21/2010 2240
1,1,2-Trichloroethane	50	54		1	107	70-130	04/21/2010 2240

PQL = Practical quantitation limit
ND = Not detected at or above the MDL
P = The RPD between two GC columns exceeds 40%
J = Estimated result < PQL and ≥ MDL
N - Recovery is out of criteria
+ - RPD is out of criteria

Where applicable, all soil sample analysis are reported on a dry weight basis unless flagged with a "W"

Note: Calculations are performed before rounding to avoid round-off errors in calculated results

Volatile Organic Compounds by GC/MS - LCS

Sample ID: LQ31987-002
Batch: 31987
Analytical Method: 8260B

Matrix: Aqueous
Prep Method: 5030B

Parameter	Spike Amount (ug/L)	Result (ug/L)	Q	Dil	% Rec	% Rec Limit	Analysis Date
Trichloroethene	50	54		1	107	70-130	04/21/2010 2240
Trichlorofluoromethane	50	54		1	108	60-140	04/21/2010 2240
Vinyl chloride	50	49		1	98	60-140	04/21/2010 2240
Xylenes (total)	100	100		1	103	70-130	04/21/2010 2240

Surrogate	Q	% Rec	Acceptance Limit
Bromofluorobenzene		95	70-130
1,2-Dichloroethane-d4		99	70-130
Toluene-d8		100	70-130

PQL = Practical quantitation limit
ND = Not detected at or above the MDL
P = The RPD between two GC columns exceeds 40%
J = Estimated result < PQL and ≥ MDL
N - Recovery is out of criteria
+ - RPD is out of criteria

Where applicable, all soil sample analysis are reported on a dry weight basis unless flagged with a "W"

Note: Calculations are performed before rounding to avoid round-off errors in calculated results

Volatile Organic Compounds by GC/MS - LCSD

Sample ID: LQ31987-003
Batch: 31987
Analytical Method: 8260B

Matrix: Aqueous
Prep Method: 5030B

Parameter	Spike Amount (ug/L)	Result (ug/L)	Q	Dil	% Rec	% RPD	% Rec Limit	% RPD Limit	Analysis Date
Acetone	100	110		1	106	2.0	46-153	20	04/21/2010 2301
Benzene	50	53		1	106	1.2	70-130	20	04/21/2010 2301
Bromodichloromethane	50	55		1	110	0.035	70-130	20	04/21/2010 2301
Bromoform	50	44		1	88	0.25	70-130	20	04/21/2010 2301
Bromomethane (Methyl bromide)	50	49		1	97	6.3	60-140	20	04/21/2010 2301
2-Butanone (MEK)	100	100		1	102	3.8	60-140	20	04/21/2010 2301
Carbon disulfide	50	52		1	104	2.6	60-140	20	04/21/2010 2301
Carbon tetrachloride	50	55		1	109	3.0	70-130	20	04/21/2010 2301
Chlorobenzene	50	53		1	106	0.20	70-130	20	04/21/2010 2301
Chloroethane	50	49		1	97	4.6	42-163	20	04/21/2010 2301
Chloroform	50	54		1	107	1.4	70-130	20	04/21/2010 2301
Chloromethane (Methyl chloride)	50	52		1	104	3.6	20-158	20	04/21/2010 2301
Cyclohexane	50	56		1	113	4.4	70-130	20	04/21/2010 2301
1,2-Dibromo-3-chloropropane (DBCP)	50	53		1	107	0.82	70-130	20	04/21/2010 2301
Dibromochloromethane	50	61		1	123	0.81	70-130	20	04/21/2010 2301
1,2-Dibromoethane (EDB)	50	56		1	112	1.2	70-130	20	04/21/2010 2301
1,4-Dichlorobenzene	50	53		1	105	0.52	70-130	20	04/21/2010 2301
1,3-Dichlorobenzene	50	53		1	106	0.30	70-130	20	04/21/2010 2301
1,2-Dichlorobenzene	50	53		1	105	0.51	70-130	20	04/21/2010 2301
Dichlorodifluoromethane	50	56		1	112	0.59	60-140	20	04/21/2010 2301
1,2-Dichloroethane	50	53		1	106	0.75	70-130	20	04/21/2010 2301
1,1-Dichloroethane	50	52		1	104	1.0	70-130	20	04/21/2010 2301
1,1-Dichloroethene	50	52		1	103	2.2	70-130	20	04/21/2010 2301
cis-1,2-Dichloroethene	50	52		1	104	1.2	70-130	20	04/21/2010 2301
trans-1,2-Dichloroethene	50	52		1	104	1.4	70-130	20	04/21/2010 2301
1,2-Dichloropropane	50	52		1	104	1.2	70-130	20	04/21/2010 2301
trans-1,3-Dichloropropene	50	52		1	104	4.8	70-130	20	04/21/2010 2301
cis-1,3-Dichloropropene	50	54		1	108	2.6	70-130	20	04/21/2010 2301
Ethylbenzene	50	53		1	106	0.13	70-130	20	04/21/2010 2301
2-Hexanone	100	110		1	108	5.5	60-140	20	04/21/2010 2301
Isopropylbenzene	50	56		1	113	0.023	70-130	20	04/21/2010 2301
Methyl acetate	50	56		1	112	4.5	15-128	20	04/21/2010 2301
Methyl tertiary butyl ether (MTBE)	50	52		1	103	3.1	70-130	20	04/21/2010 2301
4-Methyl-2-pentanone	100	110		1	105	2.6	60-140	20	04/21/2010 2301
Methylcyclohexane	50	57		1	115	2.9	70-130	20	04/21/2010 2301
Methylene chloride	50	53		1	105	2.4	70-130	20	04/21/2010 2301
Styrene	50	51		1	101	2.3	70-130	20	04/21/2010 2301
1,1,2,2-Tetrachloroethane	50	57		1	113	4.2	70-130	20	04/21/2010 2301
Tetrachloroethene	50	56		1	112	1.4	70-130	20	04/21/2010 2301
Toluene	50	54		1	107	0.19	70-130	20	04/21/2010 2301
1,1,2-Trichloro-1,2,2-Trifluoroethane	50	52		1	103	6.9	70-130	20	04/21/2010 2301
1,2,4-Trichlorobenzene	50	55		1	111	8.9	70-130	20	04/21/2010 2301
1,1,1-Trichloroethane	50	54		1	108	2.8	70-130	20	04/21/2010 2301
1,1,2-Trichloroethane	50	52		1	104	2.9	70-130	20	04/21/2010 2301

PQL = Practical quantitation limit
ND = Not detected at or above the MDL
P = The RPD between two GC columns exceeds 40%
J = Estimated result < PQL and ≥ MDL
N - Recovery is out of criteria
+ - RPD is out of criteria

Where applicable, all soil sample analysis are reported on a dry weight basis unless flagged with a "W"

Note: Calculations are performed before rounding to avoid round-off errors in calculated results

Volatile Organic Compounds by GC/MS - LCSD

Sample ID: LQ31987-003
Batch: 31987
Analytical Method: 8260B

Matrix: Aqueous
Prep Method: 5030B

Parameter	Spike Amount (ug/L)	Result (ug/L)	Q	Dil	% Rec	% RPD	% Rec Limit	% RPD Limit	Analysis Date
Trichloroethene	50	54		1	107	0.069	70-130	20	04/21/2010 2301
Trichlorofluoromethane	50	56		1	113	4.6	60-140	20	04/21/2010 2301
Vinyl chloride	50	52		1	103	5.2	60-140	20	04/21/2010 2301
Xylenes (total)	100	110		1	107	3.4	70-130	20	04/21/2010 2301

Surrogate	Q	% Rec	Acceptance Limit
Bromofluorobenzene		97	70-130
1,2-Dichloroethane-d4		97	70-130
Toluene-d8		99	70-130

PQL = Practical quantitation limit
ND = Not detected at or above the MDL
P = The RPD between two GC columns exceeds 40%
J = Estimated result < PQL and ≥ MDL
N - Recovery is out of criteria
+ - RPD is out of criteria

Where applicable, all soil sample analysis are reported on a dry weight basis unless flagged with a "W"

Note: Calculations are performed before rounding to avoid round-off errors in calculated results

Volatile Organic Compounds by GC/MS - MS

Sample ID: LD14020-004MS
Batch: 31987
Analytical Method: 8260B

Matrix: Aqueous
Prep Method: 5030B

Parameter	Sample Amount (ug/L)	Spike Amount (ug/L)	Result (ug/L)	Q	Dil	% Rec	% Rec Limit	Analysis Date
Acetone	7.5	100	81	N	1	73	80-130	04/22/2010 0813
Benzene	0.22	50	41		1	82	70-130	04/22/2010 0813
Bromodichloromethane	ND	50	40		1	81	70-130	04/22/2010 0813
Bromoform	ND	50	29	N	1	57	70-130	04/22/2010 0813
Bromomethane (Methyl bromide)	ND	50	38		1	76	60-140	04/22/2010 0813
2-Butanone (MEK)	ND	100	78		1	78	60-140	04/22/2010 0813
Carbon disulfide	0.37	50	36		1	71	60-140	04/22/2010 0813
Carbon tetrachloride	ND	50	41		1	82	70-130	04/22/2010 0813
Chlorobenzene	ND	50	39		1	77	70-130	04/22/2010 0813
Chloroethane	ND	50	39		1	79	42-163	04/22/2010 0813
Chloroform	ND	50	41		1	82	70-130	04/22/2010 0813
Chloromethane (Methyl chloride)	ND	50	44		1	88	20-158	04/22/2010 0813
Cyclohexane	ND	50	46		1	92	70-130	04/22/2010 0813
1,2-Dibromo-3-chloropropane (DBCP)	ND	50	37		1	75	70-130	04/22/2010 0813
Dibromochloromethane	ND	50	41		1	82	70-130	04/22/2010 0813
1,2-Dibromoethane (EDB)	ND	50	41		1	81	70-130	04/22/2010 0813
1,4-Dichlorobenzene	ND	50	36		1	73	70-130	04/22/2010 0813
1,3-Dichlorobenzene	ND	50	36		1	73	70-130	04/22/2010 0813
1,2-Dichlorobenzene	ND	50	37		1	75	70-130	04/22/2010 0813
Dichlorodifluoromethane	ND	50	44		1	88	60-140	04/22/2010 0813
1,2-Dichloroethane	ND	50	41		1	82	70-130	04/22/2010 0813
1,1-Dichloroethane	ND	50	41		1	82	70-130	04/22/2010 0813
1,1-Dichloroethene	0.11	50	39		1	78	70-130	04/22/2010 0813
cis-1,2-Dichloroethene	6.9	50	47		1	80	70-130	04/22/2010 0813
trans-1,2-Dichloroethene	ND	50	40		1	80	70-130	04/22/2010 0813
1,2-Dichloropropane	ND	50	39		1	79	70-130	04/22/2010 0813
trans-1,3-Dichloropropene	ND	50	34	N	1	68	70-130	04/22/2010 0813
cis-1,3-Dichloropropene	ND	50	36		1	72	70-130	04/22/2010 0813
Ethylbenzene	ND	50	38		1	76	70-130	04/22/2010 0813
2-Hexanone	ND	100	79		1	79	60-140	04/22/2010 0813
Isopropylbenzene	ND	50	40		1	79	70-130	04/22/2010 0813
Methyl acetate	ND	50	37		1	74	15-128	04/22/2010 0813
Methyl tertiary butyl ether (MTBE)	ND	50	38		1	76	70-130	04/22/2010 0813
4-Methyl-2-pentanone	ND	100	78		1	78	60-140	04/22/2010 0813
Methylcyclohexane	ND	50	42		1	83	70-130	04/22/2010 0813
Methylene chloride	ND	50	40		1	80	70-130	04/22/2010 0813
Styrene	ND	50	28	N	1	55	70-130	04/22/2010 0813
1,1,2,2-Tetrachloroethane	ND	50	41		1	81	70-130	04/22/2010 0813
Tetrachloroethene	5.4	50	46		1	80	70-130	04/22/2010 0813
Toluene	ND	50	40		1	80	70-130	04/22/2010 0813
1,1,2-Trichloro-1,2,2-Trifluoroethane	ND	50	40		1	81	70-130	04/22/2010 0813
1,2,4-Trichlorobenzene	ND	50	37		1	75	70-130	04/22/2010 0813
1,1,1-Trichloroethane	ND	50	42		1	84	70-130	04/22/2010 0813
1,1,2-Trichloroethane	ND	50	39		1	77	70-130	04/22/2010 0813

PQL = Practical quantitation limit
ND = Not detected at or above the MDL
P = The RPD between two GC columns exceeds 40%
J = Estimated result < PQL and ≥ MDL
N - Recovery is out of criteria
+ - RPD is out of criteria

Where applicable, all soil sample analysis are reported on a dry weight basis unless flagged with a "W"

Note: Calculations are performed before rounding to avoid round-off errors in calculated results

Volatile Organic Compounds by GC/MS - MS

Sample ID: LD14020-004MS
Batch: 31987
Analytical Method: 8260B

Matrix: Aqueous
Prep Method: 5030B

Parameter	Sample Amount (ug/L)	Spike Amount (ug/L)	Result (ug/L)	Q	Dil	% Rec	% Rec Limit	Analysis Date
Trichloroethene	29	50	71		1	83	70-130	04/22/2010 0813
Trichlorofluoromethane	ND	50	44		1	87	60-140	04/22/2010 0813
Vinyl chloride	ND	50	44		1	88	60-140	04/22/2010 0813
Xylenes (total)	ND	100	73		1	73	70-130	04/22/2010 0813

Surrogate	Q	% Rec	Acceptance Limit
Bromofluorobenzene		97	70-130
1,2-Dichloroethane-d4		99	70-130
Toluene-d8		102	70-130

PQL = Practical quantitation limit
ND = Not detected at or above the MDL
P = The RPD between two GC columns exceeds 40%
J = Estimated result < PQL and ≥ MDL
N - Recovery is out of criteria
+ - RPD is out of criteria

Where applicable, all soil sample analysis are reported on a dry weight basis unless flagged with a "W"

Note: Calculations are performed before rounding to avoid round-off errors in calculated results

Volatile Organic Compounds by GC/MS - MSD

Sample ID: LD14020-004MD
Batch: 31987
Analytical Method: 8260B

Matrix: Aqueous
Prep Method: 5030B

Parameter	Sample Amount (ug/L)	Spike Amount (ug/L)	Result (ug/L)	Q	Dil	% Rec	% RPD	% Rec Limit	% RPD Limit	Analysis Date
Acetone	7.5	100	100	+	1	93	22	80-130	20	04/22/2010 0834
Benzene	0.22	50	47		1	93	13	70-130	20	04/22/2010 0834
Bromodichloromethane	ND	50	46		1	93	14	70-130	20	04/22/2010 0834
Bromoform	ND	50	33	N	1	65	13	70-130	20	04/22/2010 0834
Bromomethane (Methyl bromide)	ND	50	47	+	1	95	22	60-140	20	04/22/2010 0834
2-Butanone (MEK)	ND	100	89		1	89	14	60-140	20	04/22/2010 0834
Carbon disulfide	0.37	50	45	+	1	89	22	60-140	20	04/22/2010 0834
Carbon tetrachloride	ND	50	49		1	99	19	70-130	20	04/22/2010 0834
Chlorobenzene	ND	50	44		1	88	12	70-130	20	04/22/2010 0834
Chloroethane	ND	50	48		1	96	20	42-163	20	04/22/2010 0834
Chloroform	ND	50	49		1	97	17	70-130	20	04/22/2010 0834
Chloromethane (Methyl chloride)	ND	50	54		1	108	20	20-158	20	04/22/2010 0834
Cyclohexane	ND	50	54		1	107	16	70-130	20	04/22/2010 0834
1,2-Dibromo-3-chloropropane (DBCP)	ND	50	43		1	87	15	70-130	20	04/22/2010 0834
Dibromochloromethane	ND	50	47		1	94	13	70-130	20	04/22/2010 0834
1,2-Dibromoethane (EDB)	ND	50	46		1	92	12	70-130	20	04/22/2010 0834
1,4-Dichlorobenzene	ND	50	42		1	83	13	70-130	20	04/22/2010 0834
1,3-Dichlorobenzene	ND	50	42		1	83	13	70-130	20	04/22/2010 0834
1,2-Dichlorobenzene	ND	50	42		1	84	11	70-130	20	04/22/2010 0834
Dichlorodifluoromethane	ND	50	48		1	96	9.1	60-140	20	04/22/2010 0834
1,2-Dichloroethane	ND	50	48		1	96	15	70-130	20	04/22/2010 0834
1,1-Dichloroethane	ND	50	47		1	94	14	70-130	20	04/22/2010 0834
1,1-Dichloroethene	0.11	50	48		1	95	20	70-130	20	04/22/2010 0834
cis-1,2-Dichloroethene	6.9	50	54		1	95	15	70-130	20	04/22/2010 0834
trans-1,2-Dichloroethene	ND	50	47		1	95	17	70-130	20	04/22/2010 0834
1,2-Dichloropropane	ND	50	45		1	90	13	70-130	20	04/22/2010 0834
trans-1,3-Dichloropropene	ND	50	38		1	76	11	70-130	20	04/22/2010 0834
cis-1,3-Dichloropropene	ND	50	41		1	82	13	70-130	20	04/22/2010 0834
Ethylbenzene	ND	50	44		1	87	13	70-130	20	04/22/2010 0834
2-Hexanone	ND	100	90		1	90	13	60-140	20	04/22/2010 0834
Isopropylbenzene	ND	50	45		1	90	12	70-130	20	04/22/2010 0834
Methyl acetate	ND	50	45		1	91	20	15-128	20	04/22/2010 0834
Methyl tertiary butyl ether (MTBE)	ND	50	47		1	93	20	70-130	20	04/22/2010 0834
4-Methyl-2-pentanone	ND	100	91		1	91	15	60-140	20	04/22/2010 0834
Methylcyclohexane	ND	50	50		1	100	18	70-130	20	04/22/2010 0834
Methylene chloride	ND	50	49	+	1	98	21	70-130	20	04/22/2010 0834
Styrene	ND	50	33	N	1	65	16	70-130	20	04/22/2010 0834
1,1,2,2-Tetrachloroethane	ND	50	47		1	94	14	70-130	20	04/22/2010 0834
Tetrachloroethene	5.4	50	51		1	92	12	70-130	20	04/22/2010 0834
Toluene	ND	50	46		1	91	12	70-130	20	04/22/2010 0834
1,1,2-Trichloro-1,2,2-Trifluoroethane	ND	50	48		1	96	17	70-130	20	04/22/2010 0834
1,2,4-Trichlorobenzene	ND	50	40		1	81	8.0	70-130	20	04/22/2010 0834
1,1,1-Trichloroethane	ND	50	51		1	101	19	70-130	20	04/22/2010 0834
1,1,2-Trichloroethane	ND	50	43		1	86	11	70-130	20	04/22/2010 0834

PQL = Practical quantitation limit
ND = Not detected at or above the MDL
P = The RPD between two GC columns exceeds 40%
J = Estimated result < PQL and ≥ MDL
N - Recovery is out of criteria
+ - RPD is out of criteria

Where applicable, all soil sample analysis are reported on a dry weight basis unless flagged with a "W"

Note: Calculations are performed before rounding to avoid round-off errors in calculated results

Volatile Organic Compounds by GC/MS - MSD

Sample ID: LD14020-004MD
Batch: 31987
Analytical Method: 8260B

Matrix: Aqueous
Prep Method: 5030B

Parameter	Sample Amount (ug/L)	Spike Amount (ug/L)	Result (ug/L)	Q	Dil	% Rec	% RPD	% Rec Limit	% RPD Limit	Analysis Date
Trichloroethene	29	50	74		1	89	4.3	70-130	20	04/22/2010 0834
Trichlorofluoromethane	ND	50	52		1	104	17	60-140	20	04/22/2010 0834
Vinyl chloride	ND	50	52		1	104	16	60-140	20	04/22/2010 0834
Xylenes (total)	ND	100	84		1	84	14	70-130	20	04/22/2010 0834

Surrogate	Q	% Rec	Acceptance Limit
Bromofluorobenzene		95	70-130
1,2-Dichloroethane-d4		99	70-130
Toluene-d8		101	70-130

PQL = Practical quantitation limit
ND = Not detected at or above the MDL
P = The RPD between two GC columns exceeds 40%
J = Estimated result < PQL and ≥ MDL
N - Recovery is out of criteria
+ - RPD is out of criteria

Where applicable, all soil sample analysis are reported on a dry weight basis unless flagged with a "W"

Note: Calculations are performed before rounding to avoid round-off errors in calculated results

Semivolatile Organic Compounds by GC/MS - MB

Sample ID: LQ31608-001
Batch: 31608
Analytical Method: 8270D

Matrix: Aqueous
Prep Method: 3520C
Prep Date: 04/15/2010 15

Parameter	Result	Q	Dil	PQL	MDL	Units	Analysis Date
1,1'-Biphenyl	ND		1	1.0	0.20	ug/L	04/21/2010 1934
2,4,5-Trichlorophenol	ND		1	1.0	0.18	ug/L	04/21/2010 1934
2,4,6-Trichlorophenol	ND		1	1.0	0.22	ug/L	04/21/2010 1934
2,4-Dichlorophenol	ND		1	1.0	0.15	ug/L	04/21/2010 1934
2,4-Dimethylphenol	ND		1	1.0	0.31	ug/L	04/21/2010 1934
2,4-Dinitrophenol	ND		1	5.0	0.25	ug/L	04/21/2010 1934
2,4-Dinitrotoluene	ND		1	2.0	0.45	ug/L	04/21/2010 1934
2,6-Dinitrotoluene	ND		1	2.0	0.40	ug/L	04/21/2010 1934
2-Chloronaphthalene	ND		1	1.0	0.12	ug/L	04/21/2010 1934
2-Chlorophenol	ND		1	1.0	0.13	ug/L	04/21/2010 1934
2-Methylnaphthalene	ND		1	1.0	0.080	ug/L	04/21/2010 1934
2-Methylphenol	ND		1	1.0	0.17	ug/L	04/21/2010 1934
2-Nitroaniline	ND		1	2.0	0.55	ug/L	04/21/2010 1934
2-Nitrophenol	ND		1	2.0	0.27	ug/L	04/21/2010 1934
3 & 4-Methylphenol	ND		1	2.0	0.57	ug/L	04/21/2010 1934
3,3'-Dichlorobenzidine	ND		1	5.0	0.81	ug/L	04/21/2010 1934
3-Nitroaniline	ND		1	2.0	0.77	ug/L	04/21/2010 1934
4,6-Dinitro-2-methylphenol	ND		1	5.0	1.5	ug/L	04/21/2010 1934
4-Bromophenyl phenyl ether	ND		1	1.0	0.12	ug/L	04/21/2010 1934
4-Chloro-3-methyl phenol	ND		1	1.0	0.22	ug/L	04/21/2010 1934
4-Chloroaniline	ND		1	1.0	0.13	ug/L	04/21/2010 1934
4-Chlorophenyl phenyl ether	ND		1	1.0	0.11	ug/L	04/21/2010 1934
4-Nitroaniline	ND		1	2.0	0.39	ug/L	04/21/2010 1934
4-Nitrophenol	ND		1	5.0	0.64	ug/L	04/21/2010 1934
Acenaphthene	ND		1	1.0	0.090	ug/L	04/21/2010 1934
Acenaphthylene	ND		1	1.0	0.16	ug/L	04/21/2010 1934
Acetophenone	ND		1	1.0	0.32	ug/L	04/21/2010 1934
Anthracene	ND		1	1.0	0.13	ug/L	04/21/2010 1934
Atrazine	ND		1	1.0	0.20	ug/L	04/21/2010 1934
Benzaldehyde	ND		1	5.0	1.0	ug/L	04/21/2010 1934
Benzo(a)anthracene	ND		1	1.0	0.15	ug/L	04/21/2010 1934
Benzo(a)pyrene	ND		1	1.0	0.16	ug/L	04/21/2010 1934
Benzo(b)fluoranthene	ND		1	1.0	0.20	ug/L	04/21/2010 1934
Benzo(g,h,i)perylene	ND		1	1.0	0.23	ug/L	04/21/2010 1934
Benzo(k)fluoranthene	ND		1	1.0	0.12	ug/L	04/21/2010 1934
bis(2-Chloroethoxy)methane	ND		1	1.0	0.13	ug/L	04/21/2010 1934
bis(2-Chloroethyl)ether	ND		1	1.0	0.13	ug/L	04/21/2010 1934
bis(2-Chloroisopropyl)ether	ND		1	1.0	0.080	ug/L	04/21/2010 1934
bis(2-Ethylhexyl)phthalate	ND		1	5.0	1.7	ug/L	04/21/2010 1934
Butyl benzyl phthalate	ND		1	5.0	1.7	ug/L	04/21/2010 1934
Caprolactam	ND		1	5.0	1.2	ug/L	04/21/2010 1934
Carbazole	ND		1	1.0	0.25	ug/L	04/21/2010 1934
Chrysene	ND		1	1.0	0.12	ug/L	04/21/2010 1934
Di-n-butyl phthalate	ND		1	5.0	1.7	ug/L	04/21/2010 1934

PQL = Practical quantitation limit
ND = Not detected at or above the MDL
P = The RPD between two GC columns exceeds 40%
J = Estimated result < PQL and ≥ MDL
N - Recovery is out of criteria
+ - RPD is out of criteria

Where applicable, all soil sample analysis are reported on a dry weight basis unless flagged with a "W"

Note: Calculations are performed before rounding to avoid round-off errors in calculated results

Semivolatile Organic Compounds by GC/MS - MB

Sample ID: LQ31608-001
Batch: 31608
Analytical Method: 8270D

Matrix: Aqueous
Prep Method: 3520C
Prep Date: 04/15/2010 15

Parameter	Result	Q	Dil	PQL	MDL	Units	Analysis Date
Di-n-octylphthalate	ND		1	5.0	1.7	ug/L	04/21/2010 1934
Dibenzo(a,h)anthracene	ND		1	1.0	0.13	ug/L	04/21/2010 1934
Dibenzofuran	ND		1	1.0	0.16	ug/L	04/21/2010 1934
Diethylphthalate	ND		1	5.0	1.7	ug/L	04/21/2010 1934
Dimethyl phthalate	ND		1	5.0	1.7	ug/L	04/21/2010 1934
Fluoranthene	ND		1	1.0	0.21	ug/L	04/21/2010 1934
Fluorene	ND		1	1.0	0.10	ug/L	04/21/2010 1934
Hexachlorobenzene	ND		1	1.0	0.21	ug/L	04/21/2010 1934
Hexachlorobutadiene	ND		1	1.0	0.090	ug/L	04/21/2010 1934
Hexachlorocyclopentadiene	ND		1	5.0	0.23	ug/L	04/21/2010 1934
Hexachloroethane	ND		1	1.0	0.11	ug/L	04/21/2010 1934
Indeno(1,2,3-c,d)pyrene	ND		1	1.0	0.23	ug/L	04/21/2010 1934
Isophorone	ND		1	1.0	0.080	ug/L	04/21/2010 1934
N-Nitrosodi-n-propylamine	ND		1	1.0	0.080	ug/L	04/21/2010 1934
N-Nitrosodiphenylamine (Diphenylamine)	ND		1	1.0	0.38	ug/L	04/21/2010 1934
Naphthalene	ND		1	1.0	0.070	ug/L	04/21/2010 1934
Nitrobenzene	ND		1	1.0	0.10	ug/L	04/21/2010 1934
Pentachlorophenol	ND		1	5.0	0.54	ug/L	04/21/2010 1934
Phenanthrene	ND		1	1.0	0.18	ug/L	04/21/2010 1934
Phenol	ND		1	1.0	0.11	ug/L	04/21/2010 1934
Pyrene	ND		1	1.0	0.16	ug/L	04/21/2010 1934

Surrogate	Q	% Rec	Acceptance Limit
2,4,6-Tribromophenol		83	41-144
2-Fluorobiphenyl		84	37-129
2-Fluorophenol		80	24-127
Nitrobenzene-d5		79	38-127
Phenol-d5		82	28-128
Terphenyl-d14		84	10-148

PQL = Practical quantitation limit
ND = Not detected at or above the MDL
P = The RPD between two GC columns exceeds 40%
J = Estimated result < PQL and ≥ MDL
N - Recovery is out of criteria
+ - RPD is out of criteria

Where applicable, all soil sample analysis are reported on a dry weight basis unless flagged with a "W"

Note: Calculations are performed before rounding to avoid round-off errors in calculated results

Semivolatile Organic Compounds by GC/MS - LCS

Sample ID: LQ31608-002
Batch: 31608
Analytical Method: 8270D

Matrix: Aqueous
Prep Method: 3520C
Prep Date: 04/15/2010 15

Parameter	Spike Amount (ug/L)	Result (ug/L)	Q	Dil	% Rec	% Rec Limit	Analysis Date
2,4,5-Trichlorophenol	20	18		1	88	46-125	04/21/2010 2015
2,4,6-Trichlorophenol	20	17		1	87	36-123	04/21/2010 2015
2,4-Dichlorophenol	20	16		1	79	38-127	04/21/2010 2015
2,4-Dimethylphenol	20	13		1	67	36-110	04/21/2010 2015
2,4-Dinitrophenol	100	100		1	102	33-143	04/21/2010 2015
2,4-Dinitrotoluene	40	36		1	90	55-137	04/21/2010 2015
2,6-Dinitrotoluene	40	36		1	90	53-128	04/21/2010 2015
2-Chloronaphthalene	20	16		1	82	42-132	04/21/2010 2015
2-Chlorophenol	20	16		1	82	40-128	04/21/2010 2015
2-Methylnaphthalene	20	15		1	75	49-122	04/21/2010 2015
2-Methylphenol	20	16		1	81	33-122	04/21/2010 2015
2-Nitroaniline	40	36		1	89	48-126	04/21/2010 2015
2-Nitrophenol	40	33		1	83	44-131	04/21/2010 2015
3 & 4-Methylphenol	40	33		1	83	48-112	04/21/2010 2015
3-Nitroaniline	40	29		1	72	29-109	04/21/2010 2015
4,6-Dinitro-2-methylphenol	100	99		1	99	46-151	04/21/2010 2015
4-Bromophenyl phenyl ether	20	18		1	90	49-123	04/21/2010 2015
4-Chloro-3-methyl phenol	20	16		1	81	48-136	04/21/2010 2015
4-Chloroaniline	20	7.4		1	37	18-73	04/21/2010 2015
4-Chlorophenyl phenyl ether	20	17		1	85	34-124	04/21/2010 2015
4-Nitroaniline	40	33		1	82	42-154	04/21/2010 2015
4-Nitrophenol	100	92		1	92	43-145	04/21/2010 2015
Acenaphthene	20	18		1	88	51-130	04/21/2010 2015
Acenaphthylene	20	21		1	105	46-131	04/21/2010 2015
Anthracene	20	19		1	93	48-122	04/21/2010 2015
Benzo(a)anthracene	20	19		1	94	50-143	04/21/2010 2015
Benzo(a)pyrene	20	22		1	110	55-141	04/21/2010 2015
Benzo(b)fluoranthene	20	18		1	90	48-147	04/21/2010 2015
Benzo(g,h,i)perylene	20	20		1	98	48-139	04/21/2010 2015
Benzo(k)fluoranthene	20	20		1	101	48-148	04/21/2010 2015
bis(2-Chloroethoxy)methane	20	16		1	79	46-130	04/21/2010 2015
bis(2-Chloroethyl)ether	20	17		1	85	42-127	04/21/2010 2015
bis(2-Chloroisopropyl)ether	20	16		1	82	36-133	04/21/2010 2015
bis(2-Ethylhexyl)phthalate	20	20		1	98	40-141	04/21/2010 2015
Butyl benzyl phthalate	20	21		1	106	52-142	04/21/2010 2015
Carbazole	20	17		1	87	45-101	04/21/2010 2015
Chrysene	20	19		1	94	51-137	04/21/2010 2015
Di-n-butyl phthalate	20	21		1	106	50-134	04/21/2010 2015
Di-n-octylphthalate	20	23		1	113	50-136	04/21/2010 2015
Dibenzo(a,h)anthracene	20	20		1	100	48-139	04/21/2010 2015
Dibenzofuran	20	17		1	83	45-142	04/21/2010 2015
Diethylphthalate	20	18		1	88	48-124	04/21/2010 2015
Dimethyl phthalate	20	17		1	86	43-122	04/21/2010 2015
Fluoranthene	20	19		1	95	50-124	04/21/2010 2015

PQL = Practical quantitation limit
ND = Not detected at or above the MDL
P = The RPD between two GC columns exceeds 40%
J = Estimated result < PQL and ≥ MDL
N - Recovery is out of criteria
+ - RPD is out of criteria

Where applicable, all soil sample analysis are reported on a dry weight basis unless flagged with a "W"

Note: Calculations are performed before rounding to avoid round-off errors in calculated results

Semivolatile Organic Compounds by GC/MS - LCS

Sample ID: LQ31608-002
Batch: 31608
Analytical Method: 8270D

Matrix: Aqueous
Prep Method: 3520C
Prep Date: 04/15/2010 15

Parameter	Spike Amount (ug/L)	Result (ug/L)	Q	Dil	% Rec	% Rec Limit	Analysis Date
Fluorene	20	17		1	86	39-122	04/21/2010 2015
Hexachlorobenzene	20	17		1	86	46-125	04/21/2010 2015
Hexachlorobutadiene	20	14		1	69	38-121	04/21/2010 2015
Hexachlorocyclopentadiene	100	61		1	61	24-110	04/21/2010 2015
Hexachloroethane	20	15		1	75	32-109	04/21/2010 2015
Indeno(1,2,3-c,d)pyrene	20	20		1	99	49-146	04/21/2010 2015
Isophorone	20	16		1	80	43-118	04/21/2010 2015
N-Nitrosodi-n-propylamine	20	17		1	83	46-135	04/21/2010 2015
N-Nitrosodiphenylamine (Diphenylamine)	20	18		1	92	44-124	04/21/2010 2015
Naphthalene	20	15		1	74	45-118	04/21/2010 2015
Nitrobenzene	20	17		1	83	46-131	04/21/2010 2015
Pentachlorophenol	100	93		1	93	30-137	04/21/2010 2015
Phenanthrene	20	19		1	94	49-122	04/21/2010 2015
Phenol	20	17		1	83	35-118	04/21/2010 2015
Pyrene	20	19		1	96	50-130	04/21/2010 2015

Surrogate	Q	% Rec	Acceptance Limit
2,4,6-Tribromophenol		86	41-144
2-Fluorobiphenyl		84	37-129
2-Fluorophenol		78	24-127
Nitrobenzene-d5		80	38-127
Phenol-d5		82	28-128
Terphenyl-d14		78	10-148

PQL = Practical quantitation limit
ND = Not detected at or above the MDL
P = The RPD between two GC columns exceeds 40%
J = Estimated result < PQL and ≥ MDL
N - Recovery is out of criteria
+ - RPD is out of criteria

Where applicable, all soil sample analysis are reported on a dry weight basis unless flagged with a "W"

Note: Calculations are performed before rounding to avoid round-off errors in calculated results

Semivolatile Organic Compounds by GC/MS - MS

Sample ID: LD14020-004MS
Batch: 31608
Analytical Method: 8270D

Matrix: Aqueous
Prep Method: 3520C
Prep Date: 04/15/2010 15

Parameter	Sample Amount (ug/L)	Spike Amount (ug/L)	Result (ug/L)	Q	Dil	% Rec	% Rec Limit	Analysis Date
Acenaphthene	ND	40	33		1	82	10-133	04/22/2010 1512
Acenaphthylene	ND	40	17		1	42	34-128	04/22/2010 1512
Anthracene	ND	40	19		1	48	48-122	04/22/2010 1512
Benzo(a)anthracene	ND	40	4.9	N	1	12	53-98	04/22/2010 1512
Benzo(a)pyrene	ND	40	11		1	28	11-160	04/22/2010 1512
Benzo(b)fluoranthene	ND	40	18		1	46	10-165	04/22/2010 1512
Benzo(g,h,i)perylene	ND	40	6.9	N	1	17	42-111	04/22/2010 1512
Benzo(k)fluoranthene	ND	40	26		1	65	13-175	04/22/2010 1512
4-Bromophenyl phenyl ether	ND	40	26		1	66	49-123	04/22/2010 1512
Butyl benzyl phthalate	ND	40	6.2	N	1	16	52-142	04/22/2010 1512
Carbazole	ND	40	2.6	N	1	6.5	45-101	04/22/2010 1512
4-Chloro-3-methyl phenol	ND	40	35		1	87	40-98	04/22/2010 1512
4-Chloroaniline	ND	40	ND	N	1	0.00	10-98	04/22/2010 1512
bis(2-Chloroethoxy)methane	ND	40	11	N	1	27	43-93	04/22/2010 1512
bis(2-Chloroethyl)ether	ND	40	29		1	72	41-88	04/22/2010 1512
bis(2-Chloroisopropyl)ether	ND	40	24		1	60	36-99	04/22/2010 1512
2-Chloronaphthalene	ND	40	38	N	1	95	40-89	04/22/2010 1512
2-Chlorophenol	ND	40	31		1	76	33-92	04/22/2010 1512
4-Chlorophenyl phenyl ether	ND	40	42		1	105	34-124	04/22/2010 1512
Chrysene	ND	40	6.1	N	1	15	51-107	04/22/2010 1512
Dibenzo(a,h)anthracene	ND	40	13	N	1	33	47-116	04/22/2010 1512
Dibenzofuran	ND	40	42	N	1	105	45-94	04/22/2010 1512
2,4-Dichlorophenol	ND	40	34		1	85	34-105	04/22/2010 1512
Diethylphthalate	ND	40	44		1	109	48-124	04/22/2010 1512
Dimethyl phthalate	ND	40	45		1	112	43-122	04/22/2010 1512
2,4-Dimethylphenol	ND	40	32	N	1	80	33-77	04/22/2010 1512
Di-n-butyl phthalate	ND	40	23		1	57	50-134	04/22/2010 1512
4,6-Dinitro-2-methylphenol	ND	200	260	N	1	128	33-118	04/22/2010 1512
2,4-Dinitrophenol	ND	200	260	N	1	131	19-119	04/22/2010 1512
2,4-Dinitrotoluene	ND	80	92	N	1	115	50-104	04/22/2010 1512
2,6-Dinitrotoluene	ND	80	91		1	113	53-128	04/22/2010 1512
Di-n-octylphthalate	ND	40	5.5	N	1	14	40-112	04/22/2010 1512
bis(2-Ethylhexyl)phthalate	ND	40	ND	N	1	0.00	10-142	04/22/2010 1512
Fluoranthene	ND	40	14	N	1	35	50-124	04/22/2010 1512
Fluorene	ND	40	42		1	105	39-122	04/22/2010 1512
Hexachlorobenzene	ND	40	22		1	55	46-125	04/22/2010 1512
Hexachlorobutadiene	ND	40	27		1	68	42-94	04/22/2010 1512
Hexachlorocyclopentadiene	ND	200	200	N	1	98	14-89	04/22/2010 1512
Hexachloroethane	ND	40	26		1	65	39-86	04/22/2010 1512
Indeno(1,2,3-c,d)pyrene	ND	40	9.9	N	1	25	43-113	04/22/2010 1512
Isophorone	ND	40	33		1	82	42-84	04/22/2010 1512
2-Methylnaphthalene	ND	40	32		1	81	46-90	04/22/2010 1512
2-Methylphenol	ND	40	23		1	58	33-122	04/22/2010 1512
3 & 4-Methylphenol	ND	80	50		1	63	24-97	04/22/2010 1512

PQL = Practical quantitation limit
ND = Not detected at or above the MDL
P = The RPD between two GC columns exceeds 40%
J = Estimated result < PQL and ≥ MDL
N - Recovery is out of criteria
+ - RPD is out of criteria

Where applicable, all soil sample analysis are reported on a dry weight basis unless flagged with a "W"

Note: Calculations are performed before rounding to avoid round-off errors in calculated results

Semivolatile Organic Compounds by GC/MS - MS

Sample ID: LD14020-004MS
Batch: 31608
Analytical Method: 8270D

Matrix: Aqueous
Prep Method: 3520C
Prep Date: 04/15/2010 15

Parameter	Sample Amount (ug/L)	Spike Amount (ug/L)	Result (ug/L)	Q	Dil	% Rec	% Rec Limit	Analysis Date
Naphthalene	ND	40	30		1	75	46-89	04/22/2010 1512
2-Nitroaniline	ND	80	40		1	49	48-126	04/22/2010 1512
3-Nitroaniline	ND	80	ND	N	1	0.00	10-110	04/22/2010 1512
4-Nitroaniline	ND	80	ND	N	1	0.00	41-99	04/22/2010 1512
Nitrobenzene	ND	40	32		1	79	44-91	04/22/2010 1512
2-Nitrophenol	ND	80	64		1	80	34-102	04/22/2010 1512
4-Nitrophenol	ND	200	240		1	120	29-122	04/22/2010 1512
N-Nitrosodi-n-propylamine	ND	40	30		1	74	41-96	04/22/2010 1512
N-Nitrosodiphenylamine (Diphenylamine)	ND	40	1.7	N	1	4.3	10-150	04/22/2010 1512
Pentachlorophenol	ND	200	160		1	78	32-110	04/22/2010 1512
Phenanthrene	ND	40	27		1	68	49-122	04/22/2010 1512
Phenol	ND	40	30		1	74	33-92	04/22/2010 1512
Pyrene	ND	40	9.9	N	1	25	50-130	04/22/2010 1512
2,4,5-Trichlorophenol	ND	40	46		1	115	46-125	04/22/2010 1512
2,4,6-Trichlorophenol	ND	40	45		1	113	36-123	04/22/2010 1512

Surrogate	Q	% Rec	Acceptance Limit
2-Fluorobiphenyl		101	37-129
2-Fluorophenol		69	24-127
Nitrobenzene-d5		77	38-127
Phenol-d5		72	28-128
Terphenyl-d14		17	10-148
2,4,6-Tribromophenol		78	41-144

PQL = Practical quantitation limit
ND = Not detected at or above the MDL
P = The RPD between two GC columns exceeds 40%
J = Estimated result < PQL and ≥ MDL
N - Recovery is out of criteria
+ - RPD is out of criteria

Where applicable, all soil sample analysis are reported on a dry weight basis unless flagged with a "W"

Note: Calculations are performed before rounding to avoid round-off errors in calculated results

Semivolatile Organic Compounds by GC/MS - MSD

Sample ID: LD14020-004MD
Batch: 31608
Analytical Method: 8270D

Matrix: Aqueous
Prep Method: 3520C
Prep Date: 04/15/2010 15

Parameter	Sample Amount (ug/L)	Spike Amount (ug/L)	Result (ug/L)	Q	Dil	% Rec	% RPD	% Rec Limit	% RPD Limit	Analysis Date
Acenaphthene	ND	43	36		1	83	9.7	10-133	40	04/22/2010 1532
Acenaphthylene	ND	43	20		1	46	15	34-128	40	04/22/2010 1532
Anthracene	ND	43	24		1	56	24	48-122	40	04/22/2010 1532
Benzo(a)anthracene	ND	43	7.0	N	1	16	35	53-98	40	04/22/2010 1532
Benzo(a)pyrene	ND	43	13		1	31	19	11-160	40	04/22/2010 1532
Benzo(b)fluoranthene	ND	43	17		1	40	6.2	10-165	40	04/22/2010 1532
Benzo(g,h,i)perylene	ND	43	8.3	N	1	19	18	42-111	40	04/22/2010 1532
Benzo(k)fluoranthene	ND	43	23		1	53	12	13-175	40	04/22/2010 1532
4-Bromophenyl phenyl ether	ND	43	32		1	74	19	49-123	40	04/22/2010 1532
Butyl benzyl phthalate	ND	43	13	N,+	1	29	68	52-142	40	04/22/2010 1532
Carbazole	ND	43	3.4	N	1	7.7	25	45-101	40	04/22/2010 1532
4-Chloro-3-methyl phenol	ND	43	45	N	1	103	25	40-98	40	04/22/2010 1532
4-Chloroaniline	ND	43	ND	N	1	0.00	0.00	10-98	40	04/22/2010 1532
bis(2-Chloroethoxy)methane	ND	43	1.1	N,+	1	2.6	160	43-93	40	04/22/2010 1532
bis(2-Chloroethyl)ether	ND	43	31		1	71	5.8	41-88	40	04/22/2010 1532
bis(2-Chloroisopropyl)ether	ND	43	26		1	59	6.3	36-99	40	04/22/2010 1532
2-Chloronaphthalene	ND	43	38		1	88	0.91	40-89	40	04/22/2010 1532
2-Chlorophenol	ND	43	32		1	73	3.7	33-92	40	04/22/2010 1532
4-Chlorophenyl phenyl ether	ND	43	41		1	95	1.7	34-124	40	04/22/2010 1532
Chrysene	ND	43	7.8	N	1	18	23	51-107	40	04/22/2010 1532
Dibenzo(a,h)anthracene	ND	43	13	N	1	31	1.9	47-116	40	04/22/2010 1532
Dibenzofuran	ND	43	40		1	93	4.1	45-94	40	04/22/2010 1532
2,4-Dichlorophenol	ND	43	41		1	94	18	34-105	40	04/22/2010 1532
Diethylphthalate	ND	43	42		1	97	3.5	48-124	40	04/22/2010 1532
Dimethyl phthalate	ND	43	43		1	99	3.6	43-122	40	04/22/2010 1532
2,4-Dimethylphenol	ND	43	39	N	1	91	21	33-77	40	04/22/2010 1532
Di-n-butyl phthalate	ND	43	29		1	66	24	50-134	40	04/22/2010 1532
4,6-Dinitro-2-methylphenol	ND	220	270	N	1	122	3.3	33-118	40	04/22/2010 1532
2,4-Dinitrophenol	ND	220	260	N	1	121	0.79	19-119	40	04/22/2010 1532
2,4-Dinitrotoluene	ND	87	90		1	104	2.2	50-104	40	04/22/2010 1532
2,6-Dinitrotoluene	ND	87	89		1	102	2.3	53-128	40	04/22/2010 1532
Di-n-octylphthalate	ND	43	2.3	N,+	1	5.2	84	40-112	40	04/22/2010 1532
bis(2-Ethylhexyl)phthalate	ND	43	ND	N	1	0.00	0.00	10-142	40	04/22/2010 1532
Fluoranthene	ND	43	20	N	1	47	37	50-124	40	04/22/2010 1532
Fluorene	ND	43	42		1	97	0.52	39-122	40	04/22/2010 1532
Hexachlorobenzene	ND	43	27		1	63	21	46-125	40	04/22/2010 1532
Hexachlorobutadiene	ND	43	29		1	66	5.6	42-94	40	04/22/2010 1532
Hexachlorocyclopentadiene	ND	220	150		1	70	25	14-89	40	04/22/2010 1532
Hexachloroethane	ND	43	27		1	63	6.2	39-86	40	04/22/2010 1532
Indeno(1,2,3-c,d)pyrene	ND	43	12	N	1	27	16	43-113	40	04/22/2010 1532
Isophorone	ND	43	40	N	1	91	18	42-84	40	04/22/2010 1532
2-Methylnaphthalene	ND	43	38		1	88	17	46-90	40	04/22/2010 1532
2-Methylphenol	ND	43	29		1	66	21	33-122	40	04/22/2010 1532
3 & 4-Methylphenol	ND	87	63		1	72	22	24-97	40	04/22/2010 1532

PQL = Practical quantitation limit
ND = Not detected at or above the MDL
P = The RPD between two GC columns exceeds 40%
J = Estimated result < PQL and ≥ MDL
N - Recovery is out of criteria
+ - RPD is out of criteria

Where applicable, all soil sample analysis are reported on a dry weight basis unless flagged with a "W"

Note: Calculations are performed before rounding to avoid round-off errors in calculated results

Semivolatile Organic Compounds by GC/MS - MSD

Sample ID: LD14020-004MD
Batch: 31608
Analytical Method: 8270D

Matrix: Aqueous
Prep Method: 3520C
Prep Date: 04/15/2010 15

Parameter	Sample Amount (ug/L)	Spike Amount (ug/L)	Result (ug/L)	Q	Dil	% Rec	% RPD	% Rec Limit	% RPD Limit	Analysis Date
Naphthalene	ND	43	33		1	76	9.5	46-89	40	04/22/2010 1532
2-Nitroaniline	ND	87	63	+	1	72	46	48-126	40	04/22/2010 1532
3-Nitroaniline	ND	87	ND	N	1	0.00	0.00	10-110	40	04/22/2010 1532
4-Nitroaniline	ND	87	9.1	N,+	1	11	200	41-99	40	04/22/2010 1532
Nitrobenzene	ND	43	35		1	79	8.7	44-91	40	04/22/2010 1532
2-Nitrophenol	ND	87	72		1	83	12	34-102	40	04/22/2010 1532
4-Nitrophenol	ND	220	240		1	112	1.4	29-122	40	04/22/2010 1532
N-Nitrosodi-n-propylamine	ND	43	35		1	80	16	41-96	40	04/22/2010 1532
N-Nitrosodiphenylamine (Diphenylamine)	ND	43	5.2	+	1	12	100	10-150	40	04/22/2010 1532
Pentachlorophenol	ND	220	200		1	91	24	32-110	40	04/22/2010 1532
Phenanthrene	ND	43	35		1	79	24	49-122	40	04/22/2010 1532
Phenol	ND	43	31		1	71	4.5	33-92	40	04/22/2010 1532
Pyrene	ND	43	15	N,+	1	35	42	50-130	40	04/22/2010 1532
2,4,5-Trichlorophenol	ND	43	44		1	102	3.4	46-125	40	04/22/2010 1532
2,4,6-Trichlorophenol	ND	43	44		1	100	4.0	36-123	40	04/22/2010 1532

Surrogate	Q	% Rec	Acceptance Limit
2-Fluorobiphenyl		86	37-129
2-Fluorophenol		60	24-127
Nitrobenzene-d5		80	38-127
Phenol-d5		62	28-128
Terphenyl-d14		17	10-148
2,4,6-Tribromophenol		89	41-144

PQL = Practical quantitation limit
ND = Not detected at or above the MDL
P = The RPD between two GC columns exceeds 40%
J = Estimated result < PQL and ≥ MDL
N - Recovery is out of criteria
+ - RPD is out of criteria

Where applicable, all soil sample analysis are reported on a dry weight basis unless flagged with a "W"

Note: Calculations are performed before rounding to avoid round-off errors in calculated results

Semivolatile Organic Compounds by GC/MS - MB

Sample ID: LQ31690-001
Batch: 31690
Analytical Method: 8270D

Matrix: Aqueous
Prep Method: 3520C
Prep Date: 04/16/2010 2032

Parameter	Result	Q	Dil	PQL	MDL	Units	Analysis Date
1,1'-Biphenyl	ND		1	1.0	0.20	ug/L	04/22/2010 1159
2,4,5-Trichlorophenol	ND		1	1.0	0.18	ug/L	04/22/2010 1159
2,4,6-Trichlorophenol	ND		1	1.0	0.22	ug/L	04/22/2010 1159
2,4-Dichlorophenol	ND		1	1.0	0.15	ug/L	04/22/2010 1159
2,4-Dimethylphenol	ND		1	1.0	0.31	ug/L	04/22/2010 1159
2,4-Dinitrophenol	ND		1	5.0	0.25	ug/L	04/22/2010 1159
2,4-Dinitrotoluene	ND		1	2.0	0.45	ug/L	04/22/2010 1159
2,6-Dinitrotoluene	ND		1	2.0	0.40	ug/L	04/22/2010 1159
2-Chloronaphthalene	ND		1	1.0	0.12	ug/L	04/22/2010 1159
2-Chlorophenol	ND		1	1.0	0.13	ug/L	04/22/2010 1159
2-Methylnaphthalene	ND		1	1.0	0.080	ug/L	04/22/2010 1159
2-Methylphenol	ND		1	1.0	0.17	ug/L	04/22/2010 1159
2-Nitroaniline	ND		1	2.0	0.55	ug/L	04/22/2010 1159
2-Nitrophenol	ND		1	2.0	0.27	ug/L	04/22/2010 1159
3 & 4-Methylphenol	ND		1	2.0	0.57	ug/L	04/22/2010 1159
3,3'-Dichlorobenzidine	ND		1	5.0	0.81	ug/L	04/22/2010 1159
3-Nitroaniline	ND		1	2.0	0.77	ug/L	04/22/2010 1159
4,6-Dinitro-2-methylphenol	ND		1	5.0	1.5	ug/L	04/22/2010 1159
4-Bromophenyl phenyl ether	ND		1	1.0	0.12	ug/L	04/22/2010 1159
4-Chloro-3-methyl phenol	ND		1	1.0	0.22	ug/L	04/22/2010 1159
4-Chloroaniline	ND		1	1.0	0.13	ug/L	04/22/2010 1159
4-Chlorophenyl phenyl ether	ND		1	1.0	0.11	ug/L	04/22/2010 1159
4-Nitroaniline	ND		1	2.0	0.39	ug/L	04/22/2010 1159
4-Nitrophenol	ND		1	5.0	0.64	ug/L	04/22/2010 1159
Acenaphthene	ND		1	1.0	0.090	ug/L	04/22/2010 1159
Acenaphthylene	ND		1	1.0	0.16	ug/L	04/22/2010 1159
Acetophenone	ND		1	1.0	0.32	ug/L	04/22/2010 1159
Anthracene	ND		1	1.0	0.13	ug/L	04/22/2010 1159
Atrazine	ND		1	1.0	0.20	ug/L	04/22/2010 1159
Benzaldehyde	ND		1	5.0	1.0	ug/L	04/22/2010 1159
Benzo(a)anthracene	ND		1	1.0	0.15	ug/L	04/22/2010 1159
Benzo(a)pyrene	ND		1	1.0	0.16	ug/L	04/22/2010 1159
Benzo(b)fluoranthene	ND		1	1.0	0.20	ug/L	04/22/2010 1159
Benzo(g,h,i)perylene	ND		1	1.0	0.23	ug/L	04/22/2010 1159
Benzo(k)fluoranthene	ND		1	1.0	0.12	ug/L	04/22/2010 1159
bis(2-Chloroethoxy)methane	ND		1	1.0	0.13	ug/L	04/22/2010 1159
bis(2-Chloroethyl)ether	ND		1	1.0	0.13	ug/L	04/22/2010 1159
bis(2-Chloroisopropyl)ether	ND		1	1.0	0.080	ug/L	04/22/2010 1159
bis(2-Ethylhexyl)phthalate	ND		1	5.0	1.7	ug/L	04/22/2010 1159
Butyl benzyl phthalate	ND		1	5.0	1.7	ug/L	04/22/2010 1159
Caprolactam	ND		1	5.0	1.2	ug/L	04/22/2010 1159
Carbazole	ND		1	1.0	0.25	ug/L	04/22/2010 1159
Chrysene	ND		1	1.0	0.12	ug/L	04/22/2010 1159
Di-n-butyl phthalate	ND		1	5.0	1.7	ug/L	04/22/2010 1159

PQL = Practical quantitation limit
ND = Not detected at or above the MDL
P = The RPD between two GC columns exceeds 40%
J = Estimated result < PQL and ≥ MDL
N - Recovery is out of criteria
+ - RPD is out of criteria

Where applicable, all soil sample analysis are reported on a dry weight basis unless flagged with a "W"

Note: Calculations are performed before rounding to avoid round-off errors in calculated results

Semivolatile Organic Compounds by GC/MS - MB

Sample ID: LQ31690-001
Batch: 31690
Analytical Method: 8270D

Matrix: Aqueous
Prep Method: 3520C
Prep Date: 04/16/2010 2032

Parameter	Result	Q	Dil	PQL	MDL	Units	Analysis Date
Di-n-octylphthalate	ND		1	5.0	1.7	ug/L	04/22/2010 1159
Dibenzo(a,h)anthracene	ND		1	1.0	0.13	ug/L	04/22/2010 1159
Dibenzofuran	ND		1	1.0	0.16	ug/L	04/22/2010 1159
Diethylphthalate	ND		1	5.0	1.7	ug/L	04/22/2010 1159
Dimethyl phthalate	ND		1	5.0	1.7	ug/L	04/22/2010 1159
Fluoranthene	ND		1	1.0	0.21	ug/L	04/22/2010 1159
Fluorene	ND		1	1.0	0.10	ug/L	04/22/2010 1159
Hexachlorobenzene	ND		1	1.0	0.21	ug/L	04/22/2010 1159
Hexachlorobutadiene	ND		1	1.0	0.090	ug/L	04/22/2010 1159
Hexachlorocyclopentadiene	ND		1	5.0	0.23	ug/L	04/22/2010 1159
Hexachloroethane	ND		1	1.0	0.11	ug/L	04/22/2010 1159
Indeno(1,2,3-c,d)pyrene	ND		1	1.0	0.23	ug/L	04/22/2010 1159
Isophorone	ND		1	1.0	0.080	ug/L	04/22/2010 1159
N-Nitrosodi-n-propylamine	ND		1	1.0	0.080	ug/L	04/22/2010 1159
N-Nitrosodiphenylamine (Diphenylamine)	ND		1	1.0	0.38	ug/L	04/22/2010 1159
Naphthalene	ND		1	1.0	0.070	ug/L	04/22/2010 1159
Nitrobenzene	ND		1	1.0	0.10	ug/L	04/22/2010 1159
Pentachlorophenol	ND		1	5.0	0.54	ug/L	04/22/2010 1159
Phenanthrene	ND		1	1.0	0.18	ug/L	04/22/2010 1159
Phenol	ND		1	1.0	0.11	ug/L	04/22/2010 1159
Pyrene	ND		1	1.0	0.16	ug/L	04/22/2010 1159

Surrogate	Q	% Rec	Acceptance Limit
2,4,6-Tribromophenol		69	41-144
2-Fluorobiphenyl		70	37-129
2-Fluorophenol		64	24-127
Nitrobenzene-d5		72	38-127
Phenol-d5		72	28-128
Terphenyl-d14		63	10-148

PQL = Practical quantitation limit
ND = Not detected at or above the MDL
P = The RPD between two GC columns exceeds 40%
J = Estimated result < PQL and ≥ MDL
N - Recovery is out of criteria
+ - RPD is out of criteria

Where applicable, all soil sample analysis are reported on a dry weight basis unless flagged with a "W"

Note: Calculations are performed before rounding to avoid round-off errors in calculated results

Semivolatile Organic Compounds by GC/MS - LCS

Sample ID: LQ31690-002
Batch: 31690
Analytical Method: 8270D

Matrix: Aqueous
Prep Method: 3520C
Prep Date: 04/16/2010 2032

Parameter	Spike Amount (ug/L)	Result (ug/L)	Q	Dil	% Rec	% Rec Limit	Analysis Date
2,4,5-Trichlorophenol	20	14		1	71	46-125	04/22/2010 1218
2,4,6-Trichlorophenol	20	14		1	71	36-123	04/22/2010 1218
2,4-Dichlorophenol	20	15		1	73	38-127	04/22/2010 1218
2,4-Dimethylphenol	20	14		1	69	36-110	04/22/2010 1218
2,4-Dinitrophenol	100	63		1	63	33-143	04/22/2010 1218
2,4-Dinitrotoluene	40	28		1	70	55-137	04/22/2010 1218
2,6-Dinitrotoluene	40	28		1	70	53-128	04/22/2010 1218
2-Chloronaphthalene	20	15		1	75	42-132	04/22/2010 1218
2-Chlorophenol	20	13		1	63	40-128	04/22/2010 1218
2-Methylnaphthalene	20	14		1	71	49-122	04/22/2010 1218
2-Methylphenol	20	14		1	69	33-122	04/22/2010 1218
2-Nitroaniline	40	26		1	66	48-126	04/22/2010 1218
2-Nitrophenol	40	27		1	69	44-131	04/22/2010 1218
3 & 4-Methylphenol	40	25		1	63	48-112	04/22/2010 1218
3-Nitroaniline	40	24		1	59	29-109	04/22/2010 1218
4,6-Dinitro-2-methylphenol	100	69		1	69	46-151	04/22/2010 1218
4-Bromophenyl phenyl ether	20	13		1	67	49-123	04/22/2010 1218
4-Chloro-3-methyl phenol	20	14		1	72	48-136	04/22/2010 1218
4-Chloroaniline	20	8.0		1	40	18-73	04/22/2010 1218
4-Chlorophenyl phenyl ether	20	15		1	73	34-124	04/22/2010 1218
4-Nitroaniline	40	28		1	70	42-154	04/22/2010 1218
4-Nitrophenol	100	71		1	71	43-145	04/22/2010 1218
Acenaphthene	20	14		1	70	51-130	04/22/2010 1218
Acenaphthylene	20	17		1	86	46-131	04/22/2010 1218
Anthracene	20	14		1	70	48-122	04/22/2010 1218
Benzo(a)anthracene	20	14		1	70	50-143	04/22/2010 1218
Benzo(a)pyrene	20	16		1	78	55-141	04/22/2010 1218
Benzo(b)fluoranthene	20	13		1	67	48-147	04/22/2010 1218
Benzo(g,h,i)perylene	20	14		1	69	48-139	04/22/2010 1218
Benzo(k)fluoranthene	20	15		1	76	48-148	04/22/2010 1218
bis(2-Chloroethoxy)methane	20	14		1	68	46-130	04/22/2010 1218
bis(2-Chloroethyl)ether	20	12		1	58	42-127	04/22/2010 1218
bis(2-Chloroisopropyl)ether	20	11		1	53	36-133	04/22/2010 1218
bis(2-Ethylhexyl)phthalate	20	16		1	82	40-141	04/22/2010 1218
Butyl benzyl phthalate	20	15		1	73	52-142	04/22/2010 1218
Carbazole	20	14		1	68	45-101	04/22/2010 1218
Chrysene	20	15		1	73	51-137	04/22/2010 1218
Di-n-butyl phthalate	20	14		1	71	50-134	04/22/2010 1218
Di-n-octylphthalate	20	14		1	70	50-136	04/22/2010 1218
Dibenzo(a,h)anthracene	20	15		1	73	48-139	04/22/2010 1218
Dibenzofuran	20	14		1	71	45-142	04/22/2010 1218
Diethylphthalate	20	14		1	72	48-124	04/22/2010 1218
Dimethyl phthalate	20	14		1	71	43-122	04/22/2010 1218
Fluoranthene	20	14		1	72	50-124	04/22/2010 1218

PQL = Practical quantitation limit
ND = Not detected at or above the MDL
P = The RPD between two GC columns exceeds 40%
J = Estimated result < PQL and ≥ MDL
N - Recovery is out of criteria
+ - RPD is out of criteria

Where applicable, all soil sample analysis are reported on a dry weight basis unless flagged with a "W"

Note: Calculations are performed before rounding to avoid round-off errors in calculated results

Semivolatile Organic Compounds by GC/MS - LCS

Sample ID: LQ31690-002
Batch: 31690
Analytical Method: 8270D

Matrix: Aqueous
Prep Method: 3520C
Prep Date: 04/16/2010 2032

Parameter	Spike Amount (ug/L)	Result (ug/L)	Q	Dil	% Rec	% Rec Limit	Analysis Date
Fluorene	20	14		1	72	39-122	04/22/2010 1218
Hexachlorobenzene	20	15		1	73	46-125	04/22/2010 1218
Hexachlorobutadiene	20	14		1	69	38-121	04/22/2010 1218
Hexachlorocyclopentadiene	100	61		1	61	24-110	04/22/2010 1218
Hexachloroethane	20	13		1	65	32-109	04/22/2010 1218
Indeno(1,2,3-c,d)pyrene	20	14		1	70	49-146	04/22/2010 1218
Isophorone	20	14		1	71	43-118	04/22/2010 1218
N-Nitrosodi-n-propylamine	20	13		1	67	46-135	04/22/2010 1218
N-Nitrosodiphenylamine (Diphenylamine)	20	14		1	72	44-124	04/22/2010 1218
Naphthalene	20	13		1	67	45-118	04/22/2010 1218
Nitrobenzene	20	13		1	66	46-131	04/22/2010 1218
Pentachlorophenol	100	59		1	59	30-137	04/22/2010 1218
Phenanthrene	20	14		1	72	49-122	04/22/2010 1218
Phenol	20	13		1	66	35-118	04/22/2010 1218
Pyrene	20	15		1	76	50-130	04/22/2010 1218

Surrogate	Q	% Rec	Acceptance Limit
2,4,6-Tribromophenol		66	41-144
2-Fluorobiphenyl		71	37-129
2-Fluorophenol		61	24-127
Nitrobenzene-d5		68	38-127
Phenol-d5		66	28-128
Terphenyl-d14		60	10-148

PQL = Practical quantitation limit
ND = Not detected at or above the MDL
P = The RPD between two GC columns exceeds 40%
J = Estimated result < PQL and ≥ MDL
N - Recovery is out of criteria
+ - RPD is out of criteria

Where applicable, all soil sample analysis are reported on a dry weight basis unless flagged with a "W"

Note: Calculations are performed before rounding to avoid round-off errors in calculated results

Semivolatile Organic Compounds by GC/MS - MS

Sample ID: LD14020-013MS
Batch: 31690
Analytical Method: 8270D

Matrix: Aqueous
Prep Method: 3520C
Prep Date: 04/16/2010 2032

Parameter	Sample Amount (ug/L)	Spike Amount (ug/L)	Result (ug/L)	Q	Dil	% Rec	% Rec Limit	Analysis Date
Acenaphthene	ND	40	16		1	40	10-133	04/23/2010 1454
Acenaphthylene	ND	40	14		1	35	34-128	04/23/2010 1454
Anthracene	ND	40	10	N	1	26	48-122	04/23/2010 1454
Benzo(a)anthracene	ND	40	4.4	N	1	11	53-98	04/23/2010 1454
Benzo(a)pyrene	ND	40	8.2		1	20	11-160	04/23/2010 1454
Benzo(b)fluoranthene	ND	40	8.3		1	21	10-165	04/23/2010 1454
Benzo(g,h,i)perylene	ND	40	6.2	N	1	16	42-111	04/23/2010 1454
Benzo(k)fluoranthene	ND	40	9.2		1	23	13-175	04/23/2010 1454
4-Bromophenyl phenyl ether	ND	40	11	N	1	28	49-123	04/23/2010 1454
Butyl benzyl phthalate	ND	40	7.9	N	1	20	52-142	04/23/2010 1454
Carbazole	ND	40	5.3	N	1	13	45-101	04/23/2010 1454
4-Chloro-3-methyl phenol	ND	40	15	N	1	39	40-98	04/23/2010 1454
4-Chloroaniline	ND	40	ND	N	1	0.00	10-98	04/23/2010 1454
bis(2-Chloroethoxy)methane	ND	40	10	N	1	26	43-93	04/23/2010 1454
bis(2-Chloroethyl)ether	ND	40	17		1	42	41-88	04/23/2010 1454
bis(2-Chloroisopropyl)ether	ND	40	17		1	41	36-99	04/23/2010 1454
2-Chloronaphthalene	ND	40	24		1	60	40-89	04/23/2010 1454
2-Chlorophenol	ND	40	16		1	40	33-92	04/23/2010 1454
4-Chlorophenyl phenyl ether	ND	40	13	N	1	32	34-124	04/23/2010 1454
Chrysene	ND	40	4.7	N	1	12	51-107	04/23/2010 1454
Dibenzo(a,h)anthracene	ND	40	7.3	N	1	18	47-116	04/23/2010 1454
Dibenzofuran	ND	40	14	N	1	36	45-94	04/23/2010 1454
2,4-Dichlorophenol	ND	40	15		1	37	34-105	04/23/2010 1454
Diethylphthalate	ND	40	17	N	1	42	48-124	04/23/2010 1454
Dimethyl phthalate	ND	40	16	N	1	40	43-122	04/23/2010 1454
2,4-Dimethylphenol	ND	40	17		1	42	33-77	04/23/2010 1454
Di-n-butyl phthalate	ND	40	12	N	1	30	50-134	04/23/2010 1454
4,6-Dinitro-2-methylphenol	ND	200	88		1	44	33-118	04/23/2010 1454
2,4-Dinitrophenol	ND	200	96		1	48	19-119	04/23/2010 1454
2,4-Dinitrotoluene	ND	80	33	N	1	41	50-104	04/23/2010 1454
2,6-Dinitrotoluene	ND	80	33	N	1	41	53-128	04/23/2010 1454
Di-n-octylphthalate	ND	40	8.9	N	1	22	40-112	04/23/2010 1454
bis(2-Ethylhexyl)phthalate	ND	40	3.4	N	1	8.5	10-142	04/23/2010 1454
Fluoranthene	ND	40	7.3	N	1	18	50-124	04/23/2010 1454
Fluorene	ND	40	15	N	1	37	39-122	04/23/2010 1454
Hexachlorobenzene	ND	40	7.6	N	1	19	46-125	04/23/2010 1454
Hexachlorobutadiene	ND	40	11	N	1	27	42-94	04/23/2010 1454
Hexachlorocyclopentadiene	ND	200	72		1	36	14-89	04/23/2010 1454
Hexachloroethane	ND	40	15	N	1	37	39-86	04/23/2010 1454
Indeno(1,2,3-c,d)pyrene	ND	40	6.9	N	1	17	43-113	04/23/2010 1454
Isophorone	ND	40	16	N	1	40	42-84	04/23/2010 1454
2-Methylnaphthalene	ND	40	14	N	1	35	46-90	04/23/2010 1454
2-Methylphenol	ND	40	17		1	42	33-122	04/23/2010 1454
3 & 4-Methylphenol	ND	80	32		1	40	24-97	04/23/2010 1454

PQL = Practical quantitation limit
ND = Not detected at or above the MDL
P = The RPD between two GC columns exceeds 40%
J = Estimated result < PQL and ≥ MDL
N - Recovery is out of criteria
+ - RPD is out of criteria

Where applicable, all soil sample analysis are reported on a dry weight basis unless flagged with a "W"

Note: Calculations are performed before rounding to avoid round-off errors in calculated results

Semivolatile Organic Compounds by GC/MS - MS

Sample ID: LD14020-013MS
Batch: 31690
Analytical Method: 8270D

Matrix: Aqueous
Prep Method: 3520C
Prep Date: 04/16/2010 2032

Parameter	Sample Amount (ug/L)	Spike Amount (ug/L)	Result (ug/L)	Q	Dil	% Rec	% Rec Limit	Analysis Date
Naphthalene	ND	40	13	N	1	34	46-89	04/23/2010 1454
2-Nitroaniline	ND	80	20	N	1	25	48-126	04/23/2010 1454
3-Nitroaniline	ND	80	1.5	N	1	1.9	10-110	04/23/2010 1454
4-Nitroaniline	ND	80	2.1	N	1	2.6	41-99	04/23/2010 1454
Nitrobenzene	ND	40	17	N	1	41	44-91	04/23/2010 1454
2-Nitrophenol	ND	80	32		1	40	34-102	04/23/2010 1454
4-Nitrophenol	ND	200	90		1	45	29-122	04/23/2010 1454
N-Nitrosodi-n-propylamine	ND	40	17		1	42	41-96	04/23/2010 1454
N-Nitrosodiphenylamine (Diphenylamine)	ND	40	1.8	N	1	4.4	10-150	04/23/2010 1454
Pentachlorophenol	ND	200	79		1	39	32-110	04/23/2010 1454
Phenanthrene	ND	40	13	N	1	32	49-122	04/23/2010 1454
Phenol	1.2	40	16		1	38	33-92	04/23/2010 1454
Pyrene	ND	40	6.8	N	1	17	50-130	04/23/2010 1454
2,4,5-Trichlorophenol	ND	40	17	N	1	41	46-125	04/23/2010 1454
2,4,6-Trichlorophenol	ND	40	16		1	39	36-123	04/23/2010 1454

Surrogate	Q	% Rec	Acceptance Limit
2-Fluorobiphenyl		75	37-129
2-Fluorophenol		76	24-127
Nitrobenzene-d5		80	38-127
Phenol-d5		78	28-128
Terphenyl-d14		23	10-148
2,4,6-Tribromophenol		65	41-144

PQL = Practical quantitation limit
ND = Not detected at or above the MDL
P = The RPD between two GC columns exceeds 40%
J = Estimated result < PQL and ≥ MDL
N - Recovery is out of criteria
+ - RPD is out of criteria

Where applicable, all soil sample analysis are reported on a dry weight basis unless flagged with a "W"

Note: Calculations are performed before rounding to avoid round-off errors in calculated results

Semivolatile Organic Compounds by GC/MS - MSD

Sample ID: LD14020-013MD
Batch: 31690
Analytical Method: 8270D

Matrix: Aqueous
Prep Method: 3520C
Prep Date: 04/16/2010 2032

Parameter	Sample Amount (ug/L)	Spike Amount (ug/L)	Result (ug/L)	Q	Dil	% Rec	% RPD	% Rec Limit	% RPD Limit	Analysis Date
Acenaphthene	ND	41	16		1	39	0.22	10-133	40	04/23/2010 1515
Acenaphthylene	ND	41	15		1	37	7.0	34-128	40	04/23/2010 1515
Anthracene	ND	41	11	N	1	27	8.1	48-122	40	04/23/2010 1515
Benzo(a)anthracene	ND	41	5.2	N	1	13	16	53-98	40	04/23/2010 1515
Benzo(a)pyrene	ND	41	8.6		1	21	4.7	11-160	40	04/23/2010 1515
Benzo(b)fluoranthene	ND	41	8.1		1	20	2.0	10-165	40	04/23/2010 1515
Benzo(g,h,i)perylene	ND	41	4.4	N	1	11	35	42-111	40	04/23/2010 1515
Benzo(k)fluoranthene	ND	41	9.9		1	24	7.5	13-175	40	04/23/2010 1515
4-Bromophenyl phenyl ether	ND	41	12	N	1	29	7.1	49-123	40	04/23/2010 1515
Butyl benzyl phthalate	ND	41	8.8	N	1	22	12	52-142	40	04/23/2010 1515
Carbazole	ND	41	5.9	N	1	14	10	45-101	40	04/23/2010 1515
4-Chloro-3-methyl phenol	ND	41	16	N	1	38	1.0	40-98	40	04/23/2010 1515
4-Chloroaniline	ND	41	4.7	+	1	11	200	10-98	40	04/23/2010 1515
bis(2-Chloroethoxy)methane	ND	41	11	N	1	28	8.5	43-93	40	04/23/2010 1515
bis(2-Chloroethyl)ether	ND	41	17		1	41	0.66	41-88	40	04/23/2010 1515
bis(2-Chloroisopropyl)ether	ND	41	17		1	41	2.2	36-99	40	04/23/2010 1515
2-Chloronaphthalene	ND	41	14	N,+	1	33	54	40-89	40	04/23/2010 1515
2-Chlorophenol	ND	41	16		1	39	0.59	33-92	40	04/23/2010 1515
4-Chlorophenyl phenyl ether	ND	41	13	N	1	32	0.50	34-124	40	04/23/2010 1515
Chrysene	ND	41	5.5	N	1	13	16	51-107	40	04/23/2010 1515
Dibenzo(a,h)anthracene	ND	41	7.7	N	1	19	4.4	47-116	40	04/23/2010 1515
Dibenzofuran	ND	41	14	N	1	35	0.19	45-94	40	04/23/2010 1515
2,4-Dichlorophenol	ND	41	15		1	36	0.47	34-105	40	04/23/2010 1515
Diethylphthalate	ND	41	16	N	1	40	2.7	48-124	40	04/23/2010 1515
Dimethyl phthalate	ND	41	16	N	1	38	2.6	43-122	40	04/23/2010 1515
2,4-Dimethylphenol	ND	41	17		1	41	0.30	33-77	40	04/23/2010 1515
Di-n-butyl phthalate	ND	41	13	N	1	32	6.6	50-134	40	04/23/2010 1515
4,6-Dinitro-2-methylphenol	ND	200	86		1	42	1.8	33-118	40	04/23/2010 1515
2,4-Dinitrophenol	ND	200	93		1	46	2.7	19-119	40	04/23/2010 1515
2,4-Dinitrotoluene	ND	82	32	N	1	39	2.0	50-104	40	04/23/2010 1515
2,6-Dinitrotoluene	ND	82	33	N	1	40	0.82	53-128	40	04/23/2010 1515
Di-n-octylphthalate	ND	41	9.6	N	1	23	7.6	40-112	40	04/23/2010 1515
bis(2-Ethylhexyl)phthalate	ND	41	4.2		1	10	20	10-142	40	04/23/2010 1515
Fluoranthene	ND	41	8.2	N	1	20	12	50-124	40	04/23/2010 1515
Fluorene	ND	41	15	N	1	37	1.1	39-122	40	04/23/2010 1515
Hexachlorobenzene	ND	41	8.6	N	1	21	12	46-125	40	04/23/2010 1515
Hexachlorobutadiene	ND	41	11	N	1	27	2.2	42-94	40	04/23/2010 1515
Hexachlorocyclopentadiene	ND	200	71		1	35	1.9	14-89	40	04/23/2010 1515
Hexachloroethane	ND	41	15	N	1	36	1.6	39-86	40	04/23/2010 1515
Indeno(1,2,3-c,d)pyrene	ND	41	7.2	N	1	18	5.2	43-113	40	04/23/2010 1515
Isophorone	ND	41	16	N	1	39	0.046	42-84	40	04/23/2010 1515
2-Methylnaphthalene	ND	41	14	N	1	34	0.74	46-90	40	04/23/2010 1515
2-Methylphenol	ND	41	17		1	42	2.5	33-122	40	04/23/2010 1515
3 & 4-Methylphenol	ND	82	32		1	39	0.15	24-97	40	04/23/2010 1515

PQL = Practical quantitation limit
ND = Not detected at or above the MDL
P = The RPD between two GC columns exceeds 40%
J = Estimated result < PQL and ≥ MDL
N - Recovery is out of criteria
+ - RPD is out of criteria

Where applicable, all soil sample analysis are reported on a dry weight basis unless flagged with a "W"

Note: Calculations are performed before rounding to avoid round-off errors in calculated results

Semivolatile Organic Compounds by GC/MS - MSD

Sample ID: LD14020-013MD
Batch: 31690
Analytical Method: 8270D

Matrix: Aqueous
Prep Method: 3520C
Prep Date: 04/16/2010 2032

Parameter	Sample Amount (ug/L)	Spike Amount (ug/L)	Result (ug/L)	Q	Dil	% Rec	% RPD	% Rec Limit	% RPD Limit	Analysis Date
Naphthalene	ND	41	14	N	1	33	0.83	46-89	40	04/23/2010 1515
2-Nitroaniline	ND	82	20	N	1	25	1.1	48-126	40	04/23/2010 1515
3-Nitroaniline	ND	82	ND	N,+	1	0.00	200	10-110	40	04/23/2010 1515
4-Nitroaniline	ND	82	2.1	N	1	2.6	2.2	41-99	40	04/23/2010 1515
Nitrobenzene	ND	41	17	N	1	40	0.098	44-91	40	04/23/2010 1515
2-Nitrophenol	ND	82	32		1	39	0.11	34-102	40	04/23/2010 1515
4-Nitrophenol	ND	200	84		1	41	6.6	29-122	40	04/23/2010 1515
N-Nitrosodi-n-propylamine	ND	41	17		1	41	0.041	41-96	40	04/23/2010 1515
N-Nitrosodiphenylamine (Diphenylamine)	ND	41	2.1	N	1	5.2	19	10-150	40	04/23/2010 1515
Pentachlorophenol	ND	200	79		1	38	0.22	32-110	40	04/23/2010 1515
Phenanthrene	ND	41	13	N	1	33	4.1	49-122	40	04/23/2010 1515
Phenol	1.2	41	16		1	37	0.48	33-92	40	04/23/2010 1515
Pyrene	ND	41	7.6	N	1	19	12	50-130	40	04/23/2010 1515
2,4,5-Trichlorophenol	ND	41	16	N	1	40	2.7	46-125	40	04/23/2010 1515
2,4,6-Trichlorophenol	ND	41	15		1	37	3.5	36-123	40	04/23/2010 1515

Surrogate	Q	% Rec	Acceptance Limit
2-Fluorobiphenyl		74	37-129
2-Fluorophenol		73	24-127
Nitrobenzene-d5		80	38-127
Phenol-d5		78	28-128
Terphenyl-d14		27	10-148
2,4,6-Tribromophenol		69	41-144

PQL = Practical quantitation limit
ND = Not detected at or above the MDL
P = The RPD between two GC columns exceeds 40%
J = Estimated result < PQL and ≥ MDL
N - Recovery is out of criteria
+ - RPD is out of criteria

Where applicable, all soil sample analysis are reported on a dry weight basis unless flagged with a "W"

Note: Calculations are performed before rounding to avoid round-off errors in calculated results

Semivolatile Organic Compounds by GC/MS - MB

Sample ID: LQ31716-001
Batch: 31716
Analytical Method: 8270D

Matrix: Aqueous
Prep Method: 3520C
Prep Date: 04/18/2010 1330

Parameter	Result	Q	Dil	PQL	MDL	Units	Analysis Date
1,1'-Biphenyl	ND		1	1.0	0.20	ug/L	04/22/2010 1659
2,4,5-Trichlorophenol	ND		1	1.0	0.18	ug/L	04/22/2010 1659
2,4,6-Trichlorophenol	ND		1	1.0	0.22	ug/L	04/22/2010 1659
2,4-Dichlorophenol	ND		1	1.0	0.15	ug/L	04/22/2010 1659
2,4-Dimethylphenol	ND		1	1.0	0.31	ug/L	04/22/2010 1659
2,4-Dinitrophenol	ND		1	5.0	0.25	ug/L	04/22/2010 1659
2,4-Dinitrotoluene	ND		1	2.0	0.45	ug/L	04/22/2010 1659
2,6-Dinitrotoluene	ND		1	2.0	0.40	ug/L	04/22/2010 1659
2-Chloronaphthalene	ND		1	1.0	0.12	ug/L	04/22/2010 1659
2-Chlorophenol	ND		1	1.0	0.13	ug/L	04/22/2010 1659
2-Methylnaphthalene	ND		1	1.0	0.080	ug/L	04/22/2010 1659
2-Methylphenol	ND		1	1.0	0.17	ug/L	04/22/2010 1659
2-Nitroaniline	ND		1	2.0	0.55	ug/L	04/22/2010 1659
2-Nitrophenol	ND		1	2.0	0.27	ug/L	04/22/2010 1659
3 & 4-Methylphenol	ND		1	2.0	0.57	ug/L	04/22/2010 1659
3,3'-Dichlorobenzidine	ND		1	5.0	0.81	ug/L	04/22/2010 1659
3-Nitroaniline	ND		1	2.0	0.77	ug/L	04/22/2010 1659
4,6-Dinitro-2-methylphenol	ND		1	5.0	1.5	ug/L	04/22/2010 1659
4-Bromophenyl phenyl ether	ND		1	1.0	0.12	ug/L	04/22/2010 1659
4-Chloro-3-methyl phenol	ND		1	1.0	0.22	ug/L	04/22/2010 1659
4-Chloroaniline	ND		1	1.0	0.13	ug/L	04/22/2010 1659
4-Chlorophenyl phenyl ether	ND		1	1.0	0.11	ug/L	04/22/2010 1659
4-Nitroaniline	ND		1	2.0	0.39	ug/L	04/22/2010 1659
4-Nitrophenol	ND		1	5.0	0.64	ug/L	04/22/2010 1659
Acenaphthene	ND		1	1.0	0.090	ug/L	04/22/2010 1659
Acenaphthylene	ND		1	1.0	0.16	ug/L	04/22/2010 1659
Acetophenone	ND		1	1.0	0.32	ug/L	04/22/2010 1659
Anthracene	ND		1	1.0	0.13	ug/L	04/22/2010 1659
Atrazine	ND		1	1.0	0.20	ug/L	04/22/2010 1659
Benzaldehyde	ND		1	5.0	1.0	ug/L	04/22/2010 1659
Benzo(a)anthracene	ND		1	1.0	0.15	ug/L	04/22/2010 1659
Benzo(a)pyrene	ND		1	1.0	0.16	ug/L	04/22/2010 1659
Benzo(b)fluoranthene	ND		1	1.0	0.20	ug/L	04/22/2010 1659
Benzo(g,h,i)perylene	ND		1	1.0	0.23	ug/L	04/22/2010 1659
Benzo(k)fluoranthene	ND		1	1.0	0.12	ug/L	04/22/2010 1659
bis(2-Chloroethoxy)methane	ND		1	1.0	0.13	ug/L	04/22/2010 1659
bis(2-Chloroethyl)ether	ND		1	1.0	0.13	ug/L	04/22/2010 1659
bis(2-Chloroisopropyl)ether	ND		1	1.0	0.080	ug/L	04/22/2010 1659
bis(2-Ethylhexyl)phthalate	ND		1	5.0	1.7	ug/L	04/22/2010 1659
Butyl benzyl phthalate	ND		1	5.0	1.7	ug/L	04/22/2010 1659
Caprolactam	ND		1	5.0	1.2	ug/L	04/22/2010 1659
Carbazole	ND		1	1.0	0.25	ug/L	04/22/2010 1659
Chrysene	ND		1	1.0	0.12	ug/L	04/22/2010 1659
Di-n-butyl phthalate	ND		1	5.0	1.7	ug/L	04/22/2010 1659

PQL = Practical quantitation limit
ND = Not detected at or above the MDL
P = The RPD between two GC columns exceeds 40%
J = Estimated result < PQL and ≥ MDL
N - Recovery is out of criteria
+ - RPD is out of criteria

Where applicable, all soil sample analysis are reported on a dry weight basis unless flagged with a "W"

Note: Calculations are performed before rounding to avoid round-off errors in calculated results

Semivolatile Organic Compounds by GC/MS - MB

Sample ID: LQ31716-001
Batch: 31716
Analytical Method: 8270D

Matrix: Aqueous
Prep Method: 3520C
Prep Date: 04/18/2010 1330

Parameter	Result	Q	Dil	PQL	MDL	Units	Analysis Date
Di-n-octylphthalate	ND		1	5.0	1.7	ug/L	04/22/2010 1659
Dibenzo(a,h)anthracene	ND		1	1.0	0.13	ug/L	04/22/2010 1659
Dibenzofuran	ND		1	1.0	0.16	ug/L	04/22/2010 1659
Diethylphthalate	ND		1	5.0	1.7	ug/L	04/22/2010 1659
Dimethyl phthalate	ND		1	5.0	1.7	ug/L	04/22/2010 1659
Fluoranthene	ND		1	1.0	0.21	ug/L	04/22/2010 1659
Fluorene	ND		1	1.0	0.10	ug/L	04/22/2010 1659
Hexachlorobenzene	ND		1	1.0	0.21	ug/L	04/22/2010 1659
Hexachlorobutadiene	ND		1	1.0	0.090	ug/L	04/22/2010 1659
Hexachlorocyclopentadiene	ND		1	5.0	0.23	ug/L	04/22/2010 1659
Hexachloroethane	ND		1	1.0	0.11	ug/L	04/22/2010 1659
Indeno(1,2,3-c,d)pyrene	ND		1	1.0	0.23	ug/L	04/22/2010 1659
Isophorone	ND		1	1.0	0.080	ug/L	04/22/2010 1659
N-Nitrosodi-n-propylamine	ND		1	1.0	0.080	ug/L	04/22/2010 1659
N-Nitrosodiphenylamine (Diphenylamine)	ND		1	1.0	0.38	ug/L	04/22/2010 1659
Naphthalene	ND		1	1.0	0.070	ug/L	04/22/2010 1659
Nitrobenzene	ND		1	1.0	0.10	ug/L	04/22/2010 1659
Pentachlorophenol	ND		1	5.0	0.54	ug/L	04/22/2010 1659
Phenanthrene	ND		1	1.0	0.18	ug/L	04/22/2010 1659
Phenol	ND		1	1.0	0.11	ug/L	04/22/2010 1659
Pyrene	ND		1	1.0	0.16	ug/L	04/22/2010 1659

Surrogate	Q	% Rec	Acceptance Limit
2,4,6-Tribromophenol		68	41-144
2-Fluorobiphenyl		84	37-129
2-Fluorophenol		77	24-127
Nitrobenzene-d5		84	38-127
Phenol-d5		84	28-128
Terphenyl-d14		79	10-148

PQL = Practical quantitation limit
ND = Not detected at or above the MDL
P = The RPD between two GC columns exceeds 40%
J = Estimated result < PQL and ≥ MDL
N - Recovery is out of criteria
+ - RPD is out of criteria

Where applicable, all soil sample analysis are reported on a dry weight basis unless flagged with a "W"

Note: Calculations are performed before rounding to avoid round-off errors in calculated results

Semivolatile Organic Compounds by GC/MS - LCS

Sample ID: LQ31716-002
Batch: 31716
Analytical Method: 8270D

Matrix: Aqueous
Prep Method: 3520C
Prep Date: 04/18/2010 1330

Parameter	Spike Amount (ug/L)	Result (ug/L)	Q	Dil	% Rec	% Rec Limit	Analysis Date
2,4,5-Trichlorophenol	20	16		1	80	46-125	04/22/2010 1719
2,4,6-Trichlorophenol	20	16		1	78	36-123	04/22/2010 1719
2,4-Dichlorophenol	20	15		1	73	38-127	04/22/2010 1719
2,4-Dimethylphenol	20	16		1	79	36-110	04/22/2010 1719
2,4-Dinitrophenol	100	92		1	92	33-143	04/22/2010 1719
2,4-Dinitrotoluene	40	34		1	84	55-137	04/22/2010 1719
2,6-Dinitrotoluene	40	34		1	84	53-128	04/22/2010 1719
2-Chloronaphthalene	20	15		1	73	42-132	04/22/2010 1719
2-Chlorophenol	20	16		1	81	40-128	04/22/2010 1719
2-Methylnaphthalene	20	15		1	73	49-122	04/22/2010 1719
2-Methylphenol	20	16		1	81	33-122	04/22/2010 1719
2-Nitroaniline	40	33		1	84	48-126	04/22/2010 1719
2-Nitrophenol	40	32		1	80	44-131	04/22/2010 1719
3 & 4-Methylphenol	40	32		1	80	48-112	04/22/2010 1719
3-Nitroaniline	40	28		1	70	29-109	04/22/2010 1719
4,6-Dinitro-2-methylphenol	100	94		1	94	46-151	04/22/2010 1719
4-Bromophenyl phenyl ether	20	16		1	79	49-123	04/22/2010 1719
4-Chloro-3-methyl phenol	20	15		1	76	48-136	04/22/2010 1719
4-Chloroaniline	20	8.5		1	43	18-73	04/22/2010 1719
4-Chlorophenyl phenyl ether	20	16		1	79	34-124	04/22/2010 1719
4-Nitroaniline	40	33		1	82	42-154	04/22/2010 1719
4-Nitrophenol	100	89		1	89	43-145	04/22/2010 1719
Acenaphthene	20	17		1	86	51-130	04/22/2010 1719
Acenaphthylene	20	20		1	99	46-131	04/22/2010 1719
Anthracene	20	17		1	85	48-122	04/22/2010 1719
Benzo(a)anthracene	20	17		1	85	50-143	04/22/2010 1719
Benzo(a)pyrene	20	20		1	101	55-141	04/22/2010 1719
Benzo(b)fluoranthene	20	16		1	81	48-147	04/22/2010 1719
Benzo(g,h,i)perylene	20	17		1	85	48-139	04/22/2010 1719
Benzo(k)fluoranthene	20	18		1	88	48-148	04/22/2010 1719
bis(2-Chloroethoxy)methane	20	15		1	77	46-130	04/22/2010 1719
bis(2-Chloroethyl)ether	20	18		1	89	42-127	04/22/2010 1719
bis(2-Chloroisopropyl)ether	20	18		1	92	36-133	04/22/2010 1719
bis(2-Ethylhexyl)phthalate	20	18		1	91	40-141	04/22/2010 1719
Butyl benzyl phthalate	20	19		1	97	52-142	04/22/2010 1719
Carbazole	20	17		1	84	45-101	04/22/2010 1719
Chrysene	20	17		1	84	51-137	04/22/2010 1719
Di-n-butyl phthalate	20	19		1	97	50-134	04/22/2010 1719
Di-n-octylphthalate	20	21		1	105	50-136	04/22/2010 1719
Dibenzo(a,h)anthracene	20	17		1	85	48-139	04/22/2010 1719
Dibenzofuran	20	16		1	78	45-142	04/22/2010 1719
Diethylphthalate	20	17		1	86	48-124	04/22/2010 1719
Dimethyl phthalate	20	16		1	81	43-122	04/22/2010 1719
Fluoranthene	20	17		1	84	50-124	04/22/2010 1719

PQL = Practical quantitation limit
ND = Not detected at or above the MDL
P = The RPD between two GC columns exceeds 40%
J = Estimated result < PQL and ≥ MDL
N - Recovery is out of criteria
+ - RPD is out of criteria

Where applicable, all soil sample analysis are reported on a dry weight basis unless flagged with a "W"

Note: Calculations are performed before rounding to avoid round-off errors in calculated results

Semivolatile Organic Compounds by GC/MS - LCS

Sample ID: LQ31716-002
Batch: 31716
Analytical Method: 8270D

Matrix: Aqueous
Prep Method: 3520C
Prep Date: 04/18/2010 1330

Parameter	Spike Amount (ug/L)	Result (ug/L)	Q	Dil	% Rec	% Rec Limit	Analysis Date
Fluorene	20	16		1	81	39-122	04/22/2010 1719
Hexachlorobenzene	20	15		1	77	46-125	04/22/2010 1719
Hexachlorobutadiene	20	14		1	70	38-121	04/22/2010 1719
Hexachlorocyclopentadiene	100	93		1	93	24-110	04/22/2010 1719
Hexachloroethane	20	16		1	79	32-109	04/22/2010 1719
Indeno(1,2,3-c,d)pyrene	20	17		1	85	49-146	04/22/2010 1719
Isophorone	20	16		1	79	43-118	04/22/2010 1719
N-Nitrosodi-n-propylamine	20	17		1	87	46-135	04/22/2010 1719
N-Nitrosodiphenylamine (Diphenylamine)	20	17		1	86	44-124	04/22/2010 1719
Naphthalene	20	15		1	73	45-118	04/22/2010 1719
Nitrobenzene	20	17		1	84	46-131	04/22/2010 1719
Pentachlorophenol	100	87		1	87	30-137	04/22/2010 1719
Phenanthrene	20	17		1	84	49-122	04/22/2010 1719
Phenol	20	16		1	82	35-118	04/22/2010 1719
Pyrene	20	17		1	87	50-130	04/22/2010 1719

Surrogate	Q	% Rec	Acceptance Limit
2,4,6-Tribromophenol		78	41-144
2-Fluorobiphenyl		82	37-129
2-Fluorophenol		79	24-127
Nitrobenzene-d5		84	38-127
Phenol-d5		83	28-128
Terphenyl-d14		75	10-148

PQL = Practical quantitation limit
ND = Not detected at or above the MDL
P = The RPD between two GC columns exceeds 40%
J = Estimated result < PQL and ≥ MDL
N - Recovery is out of criteria
+ - RPD is out of criteria

Where applicable, all soil sample analysis are reported on a dry weight basis unless flagged with a "W"

Note: Calculations are performed before rounding to avoid round-off errors in calculated results

Semivolatile Organic Compounds by GC/MS - LCSD

Sample ID: LQ31716-003
Batch: 31716
Analytical Method: 8270D

Matrix: Aqueous
Prep Method: 3520C
Prep Date: 04/18/2010 1330

Parameter	Spike Amount (ug/L)	Result (ug/L)	Q	Dil	% Rec	% RPD	% Rec Limit	% RPD Limit	Analysis Date
2,4,5-Trichlorophenol	20	16		1	80	0.30	46-125	40	04/22/2010 1739
2,4,6-Trichlorophenol	20	16		1	81	2.9	36-123	40	04/22/2010 1739
2,4-Dichlorophenol	20	15		1	75	2.9	38-127	40	04/22/2010 1739
2,4-Dimethylphenol	20	16		1	80	1.4	36-110	40	04/22/2010 1739
2,4-Dinitrophenol	100	90		1	90	2.8	33-143	40	04/22/2010 1739
2,4-Dinitrotoluene	40	33		1	82	1.9	55-137	40	04/22/2010 1739
2,6-Dinitrotoluene	40	34		1	84	0.15	53-128	40	04/22/2010 1739
2-Chloronaphthalene	20	15		1	76	2.8	42-132	40	04/22/2010 1739
2-Chlorophenol	20	16		1	82	2.0	40-128	40	04/22/2010 1739
2-Methylnaphthalene	20	15		1	74	1.8	49-122	40	04/22/2010 1739
2-Methylphenol	20	17		1	83	2.3	33-122	40	04/22/2010 1739
2-Nitroaniline	40	34		1	86	2.7	48-126	40	04/22/2010 1739
2-Nitrophenol	40	33		1	83	3.0	44-131	40	04/22/2010 1739
3 & 4-Methylphenol	40	33		1	82	2.2	48-112	40	04/22/2010 1739
3-Nitroaniline	40	28		1	69	0.79	29-109	40	04/22/2010 1739
4,6-Dinitro-2-methylphenol	100	91		1	91	4.1	46-151	40	04/22/2010 1739
4-Bromophenyl phenyl ether	20	16		1	82	3.4	49-123	40	04/22/2010 1739
4-Chloro-3-methyl phenol	20	15		1	77	1.2	48-136	40	04/22/2010 1739
4-Chloroaniline	20	8.3		1	42	2.2	18-73	40	04/22/2010 1739
4-Chlorophenyl phenyl ether	20	16		1	81	2.1	34-124	40	04/22/2010 1739
4-Nitroaniline	40	33		1	82	0.045	42-154	40	04/22/2010 1739
4-Nitrophenol	100	89		1	89	0.77	43-145	40	04/22/2010 1739
Acenaphthene	20	17		1	87	1.4	51-130	40	04/22/2010 1739
Acenaphthylene	20	20		1	101	1.4	46-131	40	04/22/2010 1739
Anthracene	20	17		1	86	2.1	48-122	40	04/22/2010 1739
Benzo(a)anthracene	20	17		1	85	0.10	50-143	40	04/22/2010 1739
Benzo(a)pyrene	20	20		1	101	0.49	55-141	40	04/22/2010 1739
Benzo(b)fluoranthene	20	16		1	81	0.20	48-147	40	04/22/2010 1739
Benzo(g,h,i)perylene	20	17		1	86	0.70	48-139	40	04/22/2010 1739
Benzo(k)fluoranthene	20	18		1	89	1.8	48-148	40	04/22/2010 1739
bis(2-Chloroethoxy)methane	20	16		1	78	1.3	46-130	40	04/22/2010 1739
bis(2-Chloroethyl)ether	20	18		1	91	2.0	42-127	40	04/22/2010 1739
bis(2-Chloroisopropyl)ether	20	19		1	93	1.4	36-133	40	04/22/2010 1739
bis(2-Ethylhexyl)phthalate	20	18		1	90	1.1	40-141	40	04/22/2010 1739
Butyl benzyl phthalate	20	19		1	95	1.9	52-142	40	04/22/2010 1739
Carbazole	20	17		1	85	1.5	45-101	40	04/22/2010 1739
Chrysene	20	17		1	84	0.70	51-137	40	04/22/2010 1739
Di-n-butyl phthalate	20	20		1	98	1.3	50-134	40	04/22/2010 1739
Di-n-octylphthalate	20	21		1	103	2.4	50-136	40	04/22/2010 1739
Dibenzo(a,h)anthracene	20	17		1	85	0.70	48-139	40	04/22/2010 1739
Dibenzofuran	20	16		1	78	0.62	45-142	40	04/22/2010 1739
Diethylphthalate	20	17		1	85	2.0	48-124	40	04/22/2010 1739
Dimethyl phthalate	20	16		1	81	0.25	43-122	40	04/22/2010 1739
Fluoranthene	20	17		1	84	0.28	50-124	40	04/22/2010 1739

PQL = Practical quantitation limit
ND = Not detected at or above the MDL
P = The RPD between two GC columns exceeds 40%
J = Estimated result < PQL and ≥ MDL
N - Recovery is out of criteria
+ - RPD is out of criteria

Where applicable, all soil sample analysis are reported on a dry weight basis unless flagged with a "W"

Note: Calculations are performed before rounding to avoid round-off errors in calculated results

Semivolatile Organic Compounds by GC/MS - LCSD

Sample ID: LQ31716-003
Batch: 31716
Analytical Method: 8270D

Matrix: Aqueous
Prep Method: 3520C
Prep Date: 04/18/2010 1330

Parameter	Spike Amount (ug/L)	Result (ug/L)	Q	Dil	% Rec	% RPD	% Rec Limit	% RPD Limit	Analysis Date
Fluorene	20	16		1	82	1.9	39-122	40	04/22/2010 1739
Hexachlorobenzene	20	16		1	79	3.2	46-125	40	04/22/2010 1739
Hexachlorobutadiene	20	15		1	73	3.5	38-121	40	04/22/2010 1739
Hexachlorocyclopentadiene	100	95		1	95	2.0	24-110	40	04/22/2010 1739
Hexachloroethane	20	16		1	81	2.1	32-109	40	04/22/2010 1739
Indeno(1,2,3-c,d)pyrene	20	17		1	86	0.40	49-146	40	04/22/2010 1739
Isophorone	20	16		1	81	1.5	43-118	40	04/22/2010 1739
N-Nitrosodi-n-propylamine	20	17		1	87	0.36	46-135	40	04/22/2010 1739
N-Nitrosodiphenylamine (Diphenylamine)	20	17		1	87	1.1	44-124	40	04/22/2010 1739
Naphthalene	20	15		1	75	1.7	45-118	40	04/22/2010 1739
Nitrobenzene	20	17		1	85	1.5	46-131	40	04/22/2010 1739
Pentachlorophenol	100	88		1	88	1.8	30-137	40	04/22/2010 1739
Phenanthrene	20	17		1	86	2.6	49-122	40	04/22/2010 1739
Phenol	20	17		1	84	2.5	35-118	40	04/22/2010 1739
Pyrene	20	17		1	87	1.0	50-130	40	04/22/2010 1739

Surrogate	Q	% Rec	Acceptance Limit
2,4,6-Tribromophenol		78	41-144
2-Fluorobiphenyl		82	37-129
2-Fluorophenol		78	24-127
Nitrobenzene-d5		85	38-127
Phenol-d5		84	28-128
Terphenyl-d14		74	10-148

PQL = Practical quantitation limit
ND = Not detected at or above the MDL
P = The RPD between two GC columns exceeds 40%
J = Estimated result < PQL and ≥ MDL
N - Recovery is out of criteria
+ - RPD is out of criteria

Where applicable, all soil sample analysis are reported on a dry weight basis unless flagged with a "W"

Note: Calculations are performed before rounding to avoid round-off errors in calculated results

Semivolatile Organic Compounds by GC/MS - MB

Sample ID: LQ32229-001
Batch: 32229
Analytical Method: 8270D

Matrix: Aqueous
Prep Method: 3520C
Prep Date: 04/26/2010 2104

Parameter	Result	Q	Dil	PQL	MDL	Units	Analysis Date
1,1'-Biphenyl	ND		1	1.0	0.20	ug/L	04/29/2010 1348
2,4,5-Trichlorophenol	ND		1	1.0	0.18	ug/L	04/29/2010 1348
2,4,6-Trichlorophenol	ND		1	1.0	0.22	ug/L	04/29/2010 1348
2,4-Dichlorophenol	ND		1	1.0	0.15	ug/L	04/29/2010 1348
2,4-Dimethylphenol	ND		1	1.0	0.31	ug/L	04/29/2010 1348
2,4-Dinitrophenol	ND		1	5.0	0.25	ug/L	04/29/2010 1348
2,4-Dinitrotoluene	ND		1	2.0	0.45	ug/L	04/29/2010 1348
2,6-Dinitrotoluene	ND		1	2.0	0.40	ug/L	04/29/2010 1348
2-Chloronaphthalene	ND		1	1.0	0.12	ug/L	04/29/2010 1348
2-Chlorophenol	ND		1	1.0	0.13	ug/L	04/29/2010 1348
2-Methylnaphthalene	ND		1	1.0	0.080	ug/L	04/29/2010 1348
2-Methylphenol	ND		1	1.0	0.17	ug/L	04/29/2010 1348
2-Nitroaniline	ND		1	2.0	0.55	ug/L	04/29/2010 1348
2-Nitrophenol	ND		1	2.0	0.27	ug/L	04/29/2010 1348
3 & 4-Methylphenol	ND		1	2.0	0.57	ug/L	04/29/2010 1348
3,3'-Dichlorobenzidine	ND		1	5.0	0.81	ug/L	04/29/2010 1348
3-Nitroaniline	ND		1	2.0	0.77	ug/L	04/29/2010 1348
4,6-Dinitro-2-methylphenol	ND		1	5.0	1.5	ug/L	04/29/2010 1348
4-Bromophenyl phenyl ether	ND		1	1.0	0.12	ug/L	04/29/2010 1348
4-Chloro-3-methyl phenol	ND		1	1.0	0.22	ug/L	04/29/2010 1348
4-Chloroaniline	ND		1	1.0	0.13	ug/L	04/29/2010 1348
4-Chlorophenyl phenyl ether	ND		1	1.0	0.11	ug/L	04/29/2010 1348
4-Nitroaniline	ND		1	2.0	0.39	ug/L	04/29/2010 1348
4-Nitrophenol	ND		1	5.0	0.64	ug/L	04/29/2010 1348
Acenaphthene	ND		1	1.0	0.090	ug/L	04/29/2010 1348
Acenaphthylene	ND		1	1.0	0.16	ug/L	04/29/2010 1348
Acetophenone	ND		1	1.0	0.32	ug/L	04/29/2010 1348
Anthracene	ND		1	1.0	0.13	ug/L	04/29/2010 1348
Atrazine	ND		1	1.0	0.20	ug/L	04/29/2010 1348
Benzaldehyde	ND		1	5.0	1.0	ug/L	04/29/2010 1348
Benzo(a)anthracene	ND		1	1.0	0.15	ug/L	04/29/2010 1348
Benzo(a)pyrene	ND		1	1.0	0.16	ug/L	04/29/2010 1348
Benzo(b)fluoranthene	ND		1	1.0	0.20	ug/L	04/29/2010 1348
Benzo(g,h,i)perylene	ND		1	1.0	0.23	ug/L	04/29/2010 1348
Benzo(k)fluoranthene	ND		1	1.0	0.12	ug/L	04/29/2010 1348
bis(2-Chloroethoxy)methane	ND		1	1.0	0.13	ug/L	04/29/2010 1348
bis(2-Chloroethyl)ether	ND		1	1.0	0.13	ug/L	04/29/2010 1348
bis(2-Chloroisopropyl)ether	ND		1	1.0	0.080	ug/L	04/29/2010 1348
bis(2-Ethylhexyl)phthalate	ND		1	5.0	1.7	ug/L	04/29/2010 1348
Butyl benzyl phthalate	ND		1	5.0	1.7	ug/L	04/29/2010 1348
Caprolactam	ND		1	5.0	1.2	ug/L	04/29/2010 1348
Carbazole	ND		1	1.0	0.25	ug/L	04/29/2010 1348
Chrysene	ND		1	1.0	0.12	ug/L	04/29/2010 1348
Di-n-butyl phthalate	ND		1	5.0	1.7	ug/L	04/29/2010 1348

PQL = Practical quantitation limit
ND = Not detected at or above the MDL
P = The RPD between two GC columns exceeds 40%
J = Estimated result < PQL and ≥ MDL
N - Recovery is out of criteria
+ - RPD is out of criteria

Where applicable, all soil sample analysis are reported on a dry weight basis unless flagged with a "W"

Note: Calculations are performed before rounding to avoid round-off errors in calculated results

Semivolatile Organic Compounds by GC/MS - MB

Sample ID: LQ32229-001
Batch: 32229
Analytical Method: 8270D

Matrix: Aqueous
Prep Method: 3520C
Prep Date: 04/26/2010 2104

Parameter	Result	Q	Dil	PQL	MDL	Units	Analysis Date
Di-n-octylphthalate	ND		1	5.0	1.7	ug/L	04/29/2010 1348
Dibenzo(a,h)anthracene	ND		1	1.0	0.13	ug/L	04/29/2010 1348
Dibenzofuran	ND		1	1.0	0.16	ug/L	04/29/2010 1348
Diethylphthalate	ND		1	5.0	1.7	ug/L	04/29/2010 1348
Dimethyl phthalate	ND		1	5.0	1.7	ug/L	04/29/2010 1348
Fluoranthene	ND		1	1.0	0.21	ug/L	04/29/2010 1348
Fluorene	ND		1	1.0	0.10	ug/L	04/29/2010 1348
Hexachlorobenzene	ND		1	1.0	0.21	ug/L	04/29/2010 1348
Hexachlorobutadiene	ND		1	1.0	0.090	ug/L	04/29/2010 1348
Hexachlorocyclopentadiene	ND		1	5.0	0.23	ug/L	04/29/2010 1348
Hexachloroethane	ND		1	1.0	0.11	ug/L	04/29/2010 1348
Indeno(1,2,3-c,d)pyrene	ND		1	1.0	0.23	ug/L	04/29/2010 1348
Isophorone	ND		1	1.0	0.080	ug/L	04/29/2010 1348
N-Nitrosodi-n-propylamine	ND		1	1.0	0.080	ug/L	04/29/2010 1348
N-Nitrosodiphenylamine (Diphenylamine)	ND		1	1.0	0.38	ug/L	04/29/2010 1348
Naphthalene	ND		1	1.0	0.070	ug/L	04/29/2010 1348
Nitrobenzene	ND		1	1.0	0.10	ug/L	04/29/2010 1348
Pentachlorophenol	ND		1	5.0	0.54	ug/L	04/29/2010 1348
Phenanthrene	ND		1	1.0	0.18	ug/L	04/29/2010 1348
Phenol	ND		1	1.0	0.11	ug/L	04/29/2010 1348
Pyrene	ND		1	1.0	0.16	ug/L	04/29/2010 1348

Surrogate	Q	% Rec	Acceptance Limit
2,4,6-Tribromophenol		56	41-144
2-Fluorobiphenyl		65	37-129
2-Fluorophenol		72	24-127
Nitrobenzene-d5		60	38-127
Phenol-d5		64	28-128
Terphenyl-d14		58	10-148

PQL = Practical quantitation limit
ND = Not detected at or above the MDL
P = The RPD between two GC columns exceeds 40%
J = Estimated result < PQL and ≥ MDL
N - Recovery is out of criteria
+ - RPD is out of criteria

Where applicable, all soil sample analysis are reported on a dry weight basis unless flagged with a "W"

Note: Calculations are performed before rounding to avoid round-off errors in calculated results

Semivolatile Organic Compounds by GC/MS - LCS

Sample ID: LQ32229-002
Batch: 32229
Analytical Method: 8270D

Matrix: Aqueous
Prep Method: 3520C
Prep Date: 04/26/2010 2104

Parameter	Spike Amount (ug/L)	Result (ug/L)	Q	Dil	% Rec	% Rec Limit	Analysis Date
2,4,5-Trichlorophenol	20	13		1	67	46-125	04/29/2010 1408
2,4,6-Trichlorophenol	20	13		1	64	36-123	04/29/2010 1408
2,4-Dichlorophenol	20	13		1	67	38-127	04/29/2010 1408
2,4-Dimethylphenol	20	13		1	63	36-110	04/29/2010 1408
2,4-Dinitrophenol	100	71		1	71	33-143	04/29/2010 1408
2,4-Dinitrotoluene	40	27		1	68	55-137	04/29/2010 1408
2,6-Dinitrotoluene	40	28		1	69	53-128	04/29/2010 1408
2-Chloronaphthalene	20	13		1	66	42-132	04/29/2010 1408
2-Chlorophenol	20	13		1	67	40-128	04/29/2010 1408
2-Methylnaphthalene	20	13		1	63	49-122	04/29/2010 1408
2-Methylphenol	20	13		1	64	33-122	04/29/2010 1408
2-Nitroaniline	40	29		1	73	48-126	04/29/2010 1408
2-Nitrophenol	40	28		1	70	44-131	04/29/2010 1408
3 & 4-Methylphenol	40	24		1	59	48-112	04/29/2010 1408
3-Nitroaniline	40	23		1	57	29-109	04/29/2010 1408
4,6-Dinitro-2-methylphenol	100	68		1	68	46-151	04/29/2010 1408
4-Bromophenyl phenyl ether	20	13		1	66	49-123	04/29/2010 1408
4-Chloro-3-methyl phenol	20	13		1	64	48-136	04/29/2010 1408
4-Chloroaniline	20	7.1		1	35	18-73	04/29/2010 1408
4-Chlorophenyl phenyl ether	20	13		1	63	34-124	04/29/2010 1408
4-Nitroaniline	40	28		1	70	42-154	04/29/2010 1408
4-Nitrophenol	100	70		1	70	43-145	04/29/2010 1408
Acenaphthene	20	13		1	64	51-130	04/29/2010 1408
Acenaphthylene	20	16		1	82	46-131	04/29/2010 1408
Anthracene	20	13		1	64	48-122	04/29/2010 1408
Benzo(a)anthracene	20	13		1	64	50-143	04/29/2010 1408
Benzo(a)pyrene	20	15		1	74	55-141	04/29/2010 1408
Benzo(b)fluoranthene	20	13		1	63	48-147	04/29/2010 1408
Benzo(g,h,i)perylene	20	12		1	62	48-139	04/29/2010 1408
Benzo(k)fluoranthene	20	14		1	68	48-148	04/29/2010 1408
bis(2-Chloroethoxy)methane	20	13		1	63	46-130	04/29/2010 1408
bis(2-Chloroethyl)ether	20	12		1	62	42-127	04/29/2010 1408
bis(2-Chloroisopropyl)ether	20	10		1	50	36-133	04/29/2010 1408
bis(2-Ethylhexyl)phthalate	20	12		1	58	40-141	04/29/2010 1408
Butyl benzyl phthalate	20	13		1	66	52-142	04/29/2010 1408
Carbazole	20	15		1	73	45-101	04/29/2010 1408
Chrysene	20	14		1	68	51-137	04/29/2010 1408
Di-n-butyl phthalate	20	13		1	64	50-134	04/29/2010 1408
Di-n-octylphthalate	20	12		1	59	50-136	04/29/2010 1408
Dibenzo(a,h)anthracene	20	13		1	67	48-139	04/29/2010 1408
Dibenzofuran	20	12		1	62	45-142	04/29/2010 1408
Diethylphthalate	20	12		1	62	48-124	04/29/2010 1408
Dimethyl phthalate	20	13		1	64	43-122	04/29/2010 1408
Fluoranthene	20	13		1	63	50-124	04/29/2010 1408

PQL = Practical quantitation limit
ND = Not detected at or above the MDL
P = The RPD between two GC columns exceeds 40%
J = Estimated result < PQL and ≥ MDL
N - Recovery is out of criteria
+ - RPD is out of criteria

Where applicable, all soil sample analysis are reported on a dry weight basis unless flagged with a "W"

Note: Calculations are performed before rounding to avoid round-off errors in calculated results

Semivolatile Organic Compounds by GC/MS - LCS

Sample ID: LQ32229-002
Batch: 32229
Analytical Method: 8270D

Matrix: Aqueous
Prep Method: 3520C
Prep Date: 04/26/2010 2104

Parameter	Spike Amount (ug/L)	Result (ug/L)	Q	Dil	% Rec	% Rec Limit	Analysis Date
Fluorene	20	12		1	62	39-122	04/29/2010 1408
Hexachlorobenzene	20	13		1	66	46-125	04/29/2010 1408
Hexachlorobutadiene	20	13		1	63	38-121	04/29/2010 1408
Hexachlorocyclopentadiene	100	70		1	70	24-110	04/29/2010 1408
Hexachloroethane	20	12		1	60	32-109	04/29/2010 1408
Indeno(1,2,3-c,d)pyrene	20	13		1	64	49-146	04/29/2010 1408
Isophorone	20	13		1	63	43-118	04/29/2010 1408
N-Nitrosodi-n-propylamine	20	11		1	57	46-135	04/29/2010 1408
N-Nitrosodiphenylamine (Diphenylamine)	20	14		1	69	44-124	04/29/2010 1408
Naphthalene	20	13		1	64	45-118	04/29/2010 1408
Nitrobenzene	20	12		1	59	46-131	04/29/2010 1408
Pentachlorophenol	100	65		1	65	30-137	04/29/2010 1408
Phenanthrene	20	13		1	64	49-122	04/29/2010 1408
Phenol	20	13		1	65	35-118	04/29/2010 1408
Pyrene	20	13		1	65	50-130	04/29/2010 1408

Surrogate	Q	% Rec	Acceptance Limit
2,4,6-Tribromophenol		61	41-144
2-Fluorobiphenyl		61	37-129
2-Fluorophenol		69	24-127
Nitrobenzene-d5		56	38-127
Phenol-d5		60	28-128
Terphenyl-d14		51	10-148

PQL = Practical quantitation limit
ND = Not detected at or above the MDL
P = The RPD between two GC columns exceeds 40%
J = Estimated result < PQL and ≥ MDL
N - Recovery is out of criteria
+ - RPD is out of criteria

Where applicable, all soil sample analysis are reported on a dry weight basis unless flagged with a "W"

Note: Calculations are performed before rounding to avoid round-off errors in calculated results

Semivolatile Organic Compounds by GC/MS - LCSD

Sample ID: LQ32229-003
Batch: 32229
Analytical Method: 8270D

Matrix: Aqueous
Prep Method: 3520C
Prep Date: 04/26/2010 2104

Parameter	Spike Amount (ug/L)	Result (ug/L)	Q	Dil	% Rec	% RPD	% Rec Limit	% RPD Limit	Analysis Date
2,4,5-Trichlorophenol	20	13		1	64	4.0	46-125	40	04/29/2010 1429
2,4,6-Trichlorophenol	20	13		1	64	0.84	36-123	40	04/29/2010 1429
2,4-Dichlorophenol	20	13		1	65	2.8	38-127	40	04/29/2010 1429
2,4-Dimethylphenol	20	13		1	64	0.93	36-110	40	04/29/2010 1429
2,4-Dinitrophenol	100	72		1	72	2.2	33-143	40	04/29/2010 1429
2,4-Dinitrotoluene	40	26		1	66	2.9	55-137	40	04/29/2010 1429
2,6-Dinitrotoluene	40	27		1	68	1.1	53-128	40	04/29/2010 1429
2-Chloronaphthalene	20	13		1	64	3.0	42-132	40	04/29/2010 1429
2-Chlorophenol	20	13		1	64	5.0	40-128	40	04/29/2010 1429
2-Methylnaphthalene	20	12		1	62	1.8	49-122	40	04/29/2010 1429
2-Methylphenol	20	12		1	62	3.6	33-122	40	04/29/2010 1429
2-Nitroaniline	40	28		1	70	3.1	48-126	40	04/29/2010 1429
2-Nitrophenol	40	27		1	68	3.4	44-131	40	04/29/2010 1429
3 & 4-Methylphenol	40	24		1	59	0.35	48-112	40	04/29/2010 1429
3-Nitroaniline	40	23		1	56	1.7	29-109	40	04/29/2010 1429
4,6-Dinitro-2-methylphenol	100	70		1	70	2.7	46-151	40	04/29/2010 1429
4-Bromophenyl phenyl ether	20	13		1	65	0.81	49-123	40	04/29/2010 1429
4-Chloro-3-methyl phenol	20	13		1	63	1.6	48-136	40	04/29/2010 1429
4-Chloroaniline	20	7.4		1	37	3.9	18-73	40	04/29/2010 1429
4-Chlorophenyl phenyl ether	20	12		1	61	1.9	34-124	40	04/29/2010 1429
4-Nitroaniline	40	27		1	68	2.8	42-154	40	04/29/2010 1429
4-Nitrophenol	100	66		1	66	5.7	43-145	40	04/29/2010 1429
Acenaphthene	20	12		1	61	4.6	51-130	40	04/29/2010 1429
Acenaphthylene	20	16		1	79	3.3	46-131	40	04/29/2010 1429
Anthracene	20	12		1	61	4.6	48-122	40	04/29/2010 1429
Benzo(a)anthracene	20	13		1	64	0.84	50-143	40	04/29/2010 1429
Benzo(a)pyrene	20	13		1	67	8.8	55-141	40	04/29/2010 1429
Benzo(b)fluoranthene	20	13		1	66	5.1	48-147	40	04/29/2010 1429
Benzo(g,h,i)perylene	20	12		1	58	5.6	48-139	40	04/29/2010 1429
Benzo(k)fluoranthene	20	11		1	56	18	48-148	40	04/29/2010 1429
bis(2-Chloroethoxy)methane	20	12		1	61	4.4	46-130	40	04/29/2010 1429
bis(2-Chloroethyl)ether	20	12		1	59	4.1	42-127	40	04/29/2010 1429
bis(2-Chloroisopropyl)ether	20	9.6		1	48	4.9	36-133	40	04/29/2010 1429
bis(2-Ethylhexyl)phthalate	20	12		1	58	0.053	40-141	40	04/29/2010 1429
Butyl benzyl phthalate	20	13		1	63	5.3	52-142	40	04/29/2010 1429
Carbazole	20	14		1	70	3.2	45-101	40	04/29/2010 1429
Chrysene	20	12		1	61	11	51-137	40	04/29/2010 1429
Di-n-butyl phthalate	20	12		1	61	5.2	50-134	40	04/29/2010 1429
Di-n-octylphthalate	20	12		1	58	0.21	50-136	40	04/29/2010 1429
Dibenzo(a,h)anthracene	20	13		1	65	3.1	48-139	40	04/29/2010 1429
Dibenzofuran	20	12		1	61	1.7	45-142	40	04/29/2010 1429
Diethylphthalate	20	12		1	59	4.9	48-124	40	04/29/2010 1429
Dimethyl phthalate	20	12		1	61	5.1	43-122	40	04/29/2010 1429
Fluoranthene	20	12		1	62	2.6	50-124	40	04/29/2010 1429

PQL = Practical quantitation limit
ND = Not detected at or above the MDL
P = The RPD between two GC columns exceeds 40%
J = Estimated result < PQL and ≥ MDL
N - Recovery is out of criteria
+ - RPD is out of criteria

Where applicable, all soil sample analysis are reported on a dry weight basis unless flagged with a "W"

Note: Calculations are performed before rounding to avoid round-off errors in calculated results

Semivolatile Organic Compounds by GC/MS - LCSD

Sample ID: LQ32229-003
Batch: 32229
Analytical Method: 8270D

Matrix: Aqueous
Prep Method: 3520C
Prep Date: 04/26/2010 2104

Parameter	Spike Amount (ug/L)	Result (ug/L)	Q	Dil	% Rec	% RPD	% Rec Limit	% RPD Limit	Analysis Date
Fluorene	20	12		1	60	2.1	39-122	40	04/29/2010 1429
Hexachlorobenzene	20	13		1	65	1.9	46-125	40	04/29/2010 1429
Hexachlorobutadiene	20	13		1	64	1.4	38-121	40	04/29/2010 1429
Hexachlorocyclopentadiene	100	59		1	59	17	24-110	40	04/29/2010 1429
Hexachloroethane	20	12		1	59	1.4	32-109	40	04/29/2010 1429
Indeno(1,2,3-c,d)pyrene	20	12		1	60	5.8	49-146	40	04/29/2010 1429
Isophorone	20	12		1	61	3.5	43-118	40	04/29/2010 1429
N-Nitrosodi-n-propylamine	20	11		1	55	2.3	46-135	40	04/29/2010 1429
N-Nitrosodiphenylamine (Diphenylamine)	20	13		1	66	4.8	44-124	40	04/29/2010 1429
Naphthalene	20	12		1	60	5.3	45-118	40	04/29/2010 1429
Nitrobenzene	20	12		1	58	2.3	46-131	40	04/29/2010 1429
Pentachlorophenol	100	64		1	64	1.4	30-137	40	04/29/2010 1429
Phenanthrene	20	12		1	62	4.0	49-122	40	04/29/2010 1429
Phenol	20	12		1	60	6.9	35-118	40	04/29/2010 1429
Pyrene	20	12		1	61	6.9	50-130	40	04/29/2010 1429

Surrogate	Q	% Rec	Acceptance Limit
2,4,6-Tribromophenol		60	41-144
2-Fluorobiphenyl		59	37-129
2-Fluorophenol		64	24-127
Nitrobenzene-d5		55	38-127
Phenol-d5		57	28-128
Terphenyl-d14		49	10-148

PQL = Practical quantitation limit
ND = Not detected at or above the MDL
P = The RPD between two GC columns exceeds 40%
J = Estimated result < PQL and ≥ MDL
N - Recovery is out of criteria
+ - RPD is out of criteria

Where applicable, all soil sample analysis are reported on a dry weight basis unless flagged with a "W"

Note: Calculations are performed before rounding to avoid round-off errors in calculated results

SHEALY **Chain of Custody Record**

SHEALY ENVIRONMENTAL SERVICES, INC.
106 Vantage Point Drive
West Columbia, South Carolina 29172
Telephone No. (803) 791-9700 Fax No. (803) 791-9111

Number 104879

Client: Arcadis	Report to Contact: Shelley Gibbons	Telephone No. / Fax No. / E-mail: 919-854-1282/shelley.gibbons@arcadis-us.com	Quote No.
Address: 801 Corporate Center Dr. #300	Sampler's Signature: X [signature]	Waybill No.	Page 1 of 2
City: Raleigh; State: NC; Zip Code: 27607	Printed Name: Josh Frizzell	Analysis (Attach list if more space is needed.)	
Project Name: FST-39			
Project No.: GP09HAFS.F39A.DG0FI	P.O. No.		Lot No.: LD14020

Sample ID / Description (Containers for each sample may be combined on one line.)	Date	Time	G=Grab C=Composite	Matrix: Aqueous	Matrix: Solid	Matrix: Non-Aqueous	No. of Containers by Preservative Type: Unpres.	H2SO4	HNO3	HCl	NaOH	5035 Kit	VOCs	SVOCs	Remarks / Cooler I.D.
F39TW09 (10-15)	4-12-10	1130	G	X			2			3			X	X	
F39TW09 (40-45)	4-12-10	1145	G	X			2			3			X	X	
F39TW09 (20-25)	4-12-10	1330	G	X			2			3			X	X	
F39TW09 (30-35) MS/MSD	4-12-10	1345	G	X			6			9			X	X	
DOF 4-12-10 ~~F39TW09 (20-25)~~															
DOF 4-12-10 ~~F39TW~~ F39TW09 (30-35) MS/MSD															
F39TW10 (10-15)	4-13-10	0845	G	X			2			3			X	X	
F39TW10 (40-45)	4-13-10	0900	G	X			2			3			X	X	
F39TW10 (20-25)	4-13-10	1115	G	X			2			3			X	X	
F39TW10 (30-35)	4-13-10	1300	G	X			2			3			X	X	

Possible Hazard Identification: ☐ Non-Hazard ☐ Flammable ☐ Skin Irritant ☐ Poison ☒ Unknown

Sample Disposal: ☐ Return to Client ☒ Disposal by Lab

Note: All samples are retained for six weeks from receipt unless other arrangements are made.

Turn Around Time Required (Prior lab approval required for expedited TAT.): ☒ Standard ☐ Rush (Specify)

QC Requirements (Specify)

	Date	Time		Date	Time
1. Relinquished by: [signature]	4-13-10	1600	1. Received by		
2. Relinquished by			2. Received by		
3. Relinquished by: FED Ex NAC 4/14/10	~~4/14/10~~ 4/14/10	830	3. Laboratory received by: [signature]	4-14-10	0830

Comments:

LAB USE ONLY: Received on ice (Circle) ☒ Yes No Ice Pack — Receipt Temp. 1.0, 1.0 °C

DISTRIBUTION: WHITE & YELLOW-Return to laboratory with Sample(s); PINK-Field/Client Copy

Document Number: F-AD-012 Effective Date: 08-04-02

SHEALY ENVIRONMENTAL SERVICES, INC.

SHEALY Chain of Custody Record

SHEALY ENVIRONMENTAL SERVICES, INC.
106 Vantage Point Drive
West Columbia, South Carolina 29172
Telephone No. (803) 791-9700 Fax No. (803) 791-9111

Number 104930

Client: Arcadis	Report to Contact: Shelley Gibbons	Telephone No. / Fax No. / E-mail: 919-854-1282 / shelley.gibbons@arcadis-us.com	Quote No.
Address: 801 Corporate Center Dr. #300	Sampler's Signature: X [signature]	Waybill No.	Page 2 of 2
City: Raleigh; State: NC; Zip Code: 27607	Printed Name: Josh Frizzell	Analysis (Attach list if more space is needed.)	
Project Name: FST-39			
Project No.: GP09 HAFS. F39A. DGOFI	P.O. No.		Lot No.: CD14020

Sample ID / Description (Containers for each sample may be combined on one line.)	Date	Time	G=Grab C=Composite	Matrix: Aqueous	Solid	Non-Aqueous	No. of Containers by Preservative Type: Unpres.	H_2SO_4	HNO_3	HCl	NaOH	S_2O_3 KI	VOCs	SVOCs	Remarks / Cooler I.D.
Trip Blank	—	—		X						4			X		

4-13-2010

Possible Hazard Identification: ☐ Non-Hazard ☐ Flammable ☐ Skin Irritant ☐ Poison ☑ Unknown

Sample Disposal: ☐ Return to Client ☑ Disposal by Lab

Note: All samples are retained for six weeks from receipt unless other arrangements are made.

Turn Around Time Required (Prior lab approval required for expedited TAT.): ☑ Standard ☐ Rush (Specify)

QC Requirements (Specify)

	Date	Time		Date	Time
1. Relinquished by: [signature]	4-13-10	1600	1. Received by:		
2. Relinquished by:			2. Received by:		
3. Relinquished by: Fed Ex	4/14/10	830	3. Laboratory received by: [signature]	4/14/10	0830

Comments:

LAB USE ONLY
Received on Ice (Circle): Yes No Ice Pack
Receipt Temp. 1.0, 1.0 °C

DISTRIBUTION: WHITE & YELLOW-Return to laboratory with Sample(s); PINK-Field/Client Copy

Document Number: F-AD-012 Effective Date: 08-04-02

SHEALY ENVIRONMENTAL SERVICES, INC.

Shealy Environmental Services, Inc.
Document Number: F-AD-016
Revision Number: 6

Page 1 of 1
Replaces Date: 09/22/06
Effective Date: 06/29/07

Sample Receipt Checklist (SRC)

Client: Arcadis Cooler Inspected by/date: WHL 8/14/10 Lot #: LD 14020

Means of receipt: ☐ SESI ☐ Client ☐ UPS ☑ FedEx ☐ Airborne Exp ☐ Other

Yes ☑	No ☐	NA ☐	1. Were custody seals present on the cooler?
Yes ☑	No ☐	NA ☐	2. If custody seals were present, were they intact and unbroken?

Cooler ID/temperature upon receipt 1-0 °C 1-0 °C / °C / °C / °C / °C / °C

Method: ☐ Temperature Blank ☑ Against Bottles
Method of coolant: ☑ Wet Ice ☐ Blue Ice ☐ Dry Ice ☐ None

If response is No (or Yes for 14, 15, 16), an explanation/resolution must be provided.

Yes ☐	No ☐	NA ☑	3. If temperature of any cooler exceeded 6.0°C, was Project Manager notified? PM notified by SRC, phone, note (circle one), other:_____. (For coolers received via commercial courier, PMs are to be notified immediately.
Yes ☑	No ☐	NA ☐	4. Is the commercial courier's packing slip attached to this form?
Yes ☐	No ☑	NA ☐	5. Were proper custody procedures (relinquished/received) followed?
Yes ☑	No ☐	NA ☐	6. Were sample IDs listed?
Yes ☑	No ☐	NA ☐	7. Was collection date & time listed?
Yes ☑	No ☐	NA ☐	8. Were tests to be performed listed on the COC or was quote # provided?
Yes ☑	No ☐	NA ☐	9. Did all samples arrive in the proper containers for each test?
Yes ☑	No ☐	NA ☐	10. Did all container label information (ID, date, time) agree with COC?
Yes ☑	No ☐	NA ☐	11. Did all containers arrive in good condition (unbroken, lids on, etc.)?
Yes ☑	No ☐	NA ☐	12. Was adequate sample volume available?
Yes ☑	No ☐	NA ☐	13. Were all samples received within ½ the holding time or 48 hours, whichever comes first?
Yes ☐	No ☑	NA ☐	14. Were any samples containers missing?
Yes ☐	No ☑	NA ☐	15. Were there any excess samples not listed on COC?
Yes ☑	No ☐	NA ☐	16. Were bubbles present >"pea-size" (¼" or 6mm in diameter) in any VOA vials?
Yes ☐	No ☐	NA ☑	17. Were all metals/O&G/TEM/nutrient samples received at a pH of <2?
Yes ☐	No ☐	NA ☑	18. Were all cyanide and/or sulfide samples received at a pH >12?
Yes ☐	No ☐	NA ☑	19. Were all applicable NH3/TKN/cyanide/phenol/BNA/pest/PCB/herb (<0.2mg/L) and toxicity (<0.1mg/L) samples free of residual chlorine?
Yes ☐	No ☐	NA ☑	20. Were collection temperatures documented on the COC for NC samples?

Sample Preservation (Must be completed for any sample(s) incorrectly preserved or with headspace.)

Sample(s)_____ were received incorrectly preserved and were adjusted accordingly in sample receiving with _____ (H_2SO_4,HNO_3,HCl,NaOH) with the SR # (number)

Sample(s) -009 (TB)(4) were received with bubbles >6 mm in diameter.

Sample(s)_____ were received with TRC >0.2 mg/L for NH3/TKN/cyanide/BNA/pest/PCB/herb.

Toxicity sample(s)_____ were received with TRC >0.1 mg/L and were analyzed by method 330.5.

Corrective Action taken, if necessary:

Was client notified: Yes ☐ No ☐ Did client respond: Yes ☐ No ☐

SESI employee:_____ Date of response: _____

Comments:

SHEALY ENVIRONMENTAL SERVICES, INC.

SHEALY Chain of Custody Record

SHEALY ENVIRONMENTAL SERVICES, INC.
106 Vantage Point Drive
West Columbia, South Carolina 29172
Telephone No. (803) 791-9700 Fax No. (803) 791-9111

Number 104895

Client	Arcadis
Address	801 Corporate Center Dr. #300
City	Raleigh
State	NC
Zip Code	27607
Project Name	FST-39
Project No.	G-P09HAFS.F39A.DGOPF
P.O. No.	
Report to Contact	Shelley Gibbons
Sampler's Signature	
Printed Name	Josh Frizzell
Telephone No. / Fax No. / Email	919-854-1282 / shelley.gibbons@arcadis-us.com
Waybill No.	
Quote No.	
Page	1 of 1
Analysis (Attach list if more space is needed.)	VOCs, SVOCs
Lot No.	LD14020

Sample ID / Description (Containers for each sample may be combined on one line.)	Date	Time	G=Grab C=Composite	Aqueous	Solid	Non-Aqueous	Liquids	HCSCM	HWOL	HCl	NaOH	SOS Kit	VOCs	SVOCs	Remarks / Cooler I.D.
F39TW11 (40-45)	4-14-10	0815	G	X			2			3			X	X	
F39TW11 (10-15)	4-14-10	0845	G	X			2			3			X	X	
F39TW11 (30-35)	4-14-10	1015	G	X			2			3			X	X	
F39TW11 (20-25)	4-14-10	1045	G	X			2			3			X	X	
Trip Blank				X						2			X		

JDF 4-14-2010

Possible Hazard Identification: ☐ Non-Hazard ☐ Flammable ☐ Skin Irritant ☐ Poison ☒ Unknown

Sample Disposal: ☐ Return to Client ☒ Disposal by Lab

Note: All samples are retained for six weeks from receipt unless other arrangements are made.

Turn Around Time Required (Prior lab approval required for expedited T.A.T.): ☒ Standard ☐ Rush (Specify)

QC Requirements (Specify)

	Date	Time
1. Relinquished by		
2. Relinquished by		
3. Relinquished by FedEx	4-15-10	0830

	Date	Time
1. Received by		
2. Received by		
3. Laboratory received by	4-15-10	0830

Comments

LAB USE ONLY
Received on ice (Circle) Yes No Ice Pack

Receipt Temp. 2.1 °C

DISTRIBUTION: WHITE & YELLOW-Return to laboratory with Sample(s); PINK-Field/Client Copy

Document Number: F-AD-012 Effective Date: 08-04-02

SHEALY ENVIRONMENTAL SERVICES, INC.

Shealy Environmental Services, Inc
Document Number: F-AD-016
Revision Number: 6

Page 1 of 1
Replaces Date: 09/22/06
Effective Date: 05/29/07

Sample Receipt Checklist (SRC)

Client: Arcadis Cooler Inspected by/date: GA 4/15/10 Lot #: LD14020

Means of receipt: ☐ SESI ☐ Client ☐ UPS ☑ FedEx ☐ Airborne Exp ☐ Other

Yes ☑	No ☐	NA ☐	1. Were custody seals present on the cooler?
Yes ☑	No ☐	NA ☐	2. If custody seals were present, were they intact and unbroken?

Cooler ID/temperature upon receipt 2.11 °C / °C / °C / °C / °C / °C / °C / °C

Method: ☐ Temperature Blank ☑ Against Bottles
Method of coolant: ☑ Wet Ice ☐ Blue Ice ☐ Dry Ice ☐ None

If response is No (or Yes for 14, 15, 16), an explanation/resolution must be provided.

Yes ☐	No ☐	NA ☑	3. If temperature of any cooler exceeded 6.0°C, was Project Manager notified? PM notified by SRC, phone, note (circle one), other: _____. (For coolers received via commercial courier, PMs are to be notified immediately.
Yes ☑	No ☐	NA ☐	4. Is the commercial courier's packing slip attached to this form?
Yes ☐	No ☑	NA ☐	5. Were proper custody procedures (relinquished/received) followed?
Yes ☑	No ☐	NA ☐	6. Were sample IDs listed?
Yes ☑	No ☐	NA ☐	7. Was collection date & time listed?
Yes ☑	No ☐	NA ☐	8. Were tests to be performed listed on the COC or was quote # provided?
Yes ☑	No ☐	NA ☐	9. Did all samples arrive in the proper containers for each test?
Yes ☑	No ☐	NA ☐	10. Did all container label information (ID, date, time) agree with COC?
Yes ☑	No ☐	NA ☐	11. Did all containers arrive in good condition (unbroken, lids on, etc.)?
Yes ☑	No ☐	NA ☐	12. Was adequate sample volume available?
Yes ☑	No ☐	NA ☐	13. Were all samples received within ½ the holding time or 48 hours, whichever comes first?
Yes ☐	No ☑	NA ☐	14. Were any samples containers missing?
Yes ☐	No ☑	NA ☐	15. Were there any excess samples not listed on COC?
Yes ☐	No ☑	NA ☐	16. Were bubbles present >"pea-size" (¼"or 6mm in diameter) in any VOA vials?
Yes ☐	No ☐	NA ☑	17. Were all metals/O&G/HEM/nutrient samples received at a pH of <2?
Yes ☐	No ☐	NA ☑	18. Were all cyanide and/or sulfide samples received at a pH >12?
Yes ☐	No ☐	NA ☑	19. Were all applicable NH3/TKN/cyanide/phenol/BNA/pest/PCB/herb (<0.2mg/L) and toxicity (<0.1mg/L) samples free of residual chlorine?
Yes ☐	No ☐	NA ☑	20. Were collection temperatures documented on the COC for NC samples?

Sample Preservation (Must be completed for any sample(s) incorrectly preserved or with headspace.)

Sample(s) _____ were received incorrectly preserved and were adjusted accordingly in sample receiving with _____ (H_2SO_4,HNO_3,HCl,NaOH) with the SR # (number)

Sample(s) _____ were received with bubbles >6 mm in diameter.

Sample(s) _____ were received with TRC >0.2 mg/L for NH3/TKN/cyanide/BNA/pest/PCB/herb.

Toxicity sample(s) _____ were received with TRC >0.1 mg/L and were analyzed by method 330.5.

Corrective Action taken, if necessary:

Was client notified: Yes ☐ No ☐ Did client respond: Yes ☐ No ☐

SESI employee: _____ Date of response: _____

Comments: _____

SHEALY **Chain of Custody Record**

SHEALY ENVIRONMENTAL SERVICES, INC.
106 Vantage Point Drive
West Columbia, South Carolina 29172
Telephone No. (803) 791-9700 Fax No. (803) 791-9111

Number 104896

Client: Arcadis	Report to Contact: Shelley Gibbons	Telephone No. / Fax No. / E-mail: 919-854-1282 / shelley.gibbons@arcadis-us.com	Quote No.: 11954
Address: 801 Corporate Center Dr. #300	Sampler's Signature: [signature]	Waybill No.	Page 1 of 1
City: Raleigh State: NC Zip Code: 27607	Printed Name: Josh Frizzell	Analysis (Attach list if more space is needed.)	
Project Name: FST-39			
Project No.: GP09HAFS, F39A, DGOFI	P.O. No.		Lot No.: LD14020

Sample ID / Description (Containers for each sample may be combined on one line.)	Date	Time	G=Grab C=Composite	Matrix: Aqueous	Matrix: Solid	Matrix: Non-Aqueous	No. of Containers by Preservative Type: Unpres.	H2SO4	HNO3	HCl	NaOH	5035 Kit	VOCs	SVOCs	Remarks / Cooler I.D.
F39TW12 (10-15)	4-14-10	1700	G	X			2			3			X	X	
F39TW12 (20-25)	4-14-10	1915	G	X			2			3			X	X	
F39TW12 (30-35)	4-14-10	1845	G	X			2			3			X	X	
F39TW12 (40-45)	4-14-10	1620	G	X			2			3			X	X	
Trip Blank	—	—	G	X						2			X		

JDF 4-15-2010

Possible Hazard Identification: ☐ Non-Hazard ☐ Flammable ☐ Skin Irritant ☐ Poison ☒ Unknown

Sample Disposal: ☐ Return to Client ☒ Disposal by Lab

Note: All samples are retained for six weeks from receipt unless other arrangements are made.

Turn Around Time Required (Prior lab approval required for expedited TAT.): ☒ Standard ☐ Rush (Specify)

QC Requirements (Specify)

	Date	Time		Date	Time
1. Relinquished by: [signature]	4-16-10	1600	1. Received by		
2. Relinquished by			2. Received by		
3. Relinquished by: Fed Ex	4/17/10	~~0954~~ 0950	3. Laboratory received by: [signature]	4/17/10	0950

Comments

LAB USE ONLY
Received on ice (Circle) Yes No Ice Pack
Receipt Temp. 1.0 °C

DISTRIBUTION: WHITE & YELLOW-Return to laboratory with Sample(s); PINK-Field/Client Copy

Document Number: F-AD-012 Effective Date: 08-04-02

Shealy Environmental Services, Inc.
Document Number: F-AD-016
Revision Number 6

Page 1 of 1
Replaces Date: 09/22/06
Effective Date: 05/29/07

Sample Receipt Checklist (SRC)

Client: Arcadis Cooler Inspected by/date: WHL 4/7/10 Lot #: LD14020

Means of receipt: ☐ SESI ☐ Client ☐ UPS ☑ FedEx ☐ Airborne Exp ☐ Other

Yes ☑	No ☐	NA ☐	1. Were custody seals present on the cooler?
Yes ☑	No ☐	NA ☐	2. If custody seals were present, were they intact and unbroken?

Cooler ID/temperature upon receipt 1.0 °C ___/___ °C ___/___ °C ___/___ °C
___/___ °C ___/___ °C ___/___ °C ___/___ °C

Method: ☐ Temperature Blank ☑ Against Bottles
Method of coolant: ☑ Wet Ice ☐ Blue Ice ☐ Dry Ice ☐ None

If response is No (or Yes for 14, 15, 16), an explanation/resolution must be provided.

Yes ☐	No ☐	NA ☑	3. If temperature of any cooler exceeded 6.0°C, was Project Manager notified? PM notified by SRC, phone, note (circle one), other: _____. (For coolers received via commercial courier, PMs are to be notified immediately.
Yes ☑	No ☐	NA ☐	4. Is the commercial courier's packing slip attached to this form?
Yes ☐	No ☑	NA ☐	5. Were proper custody procedures (relinquished/received) followed?
Yes ☑	No ☐	NA ☐	6. Were sample IDs listed?
Yes ☑	No ☐	NA ☐	7. Was collection date & time listed?
Yes ☑	No ☐	NA ☐	8. Were tests to be performed listed on the COC or was quote # provided?
Yes ☑	No ☐	NA ☐	9. Did all samples arrive in the proper containers for each test?
Yes ☑	No ☐	NA ☐	10. Did all container label information (ID, date, time) agree with COC?
Yes ☑	No ☐	NA ☐	11. Did all containers arrive in good condition (unbroken, lids on, etc.)?
Yes ☑	No ☐	NA ☐	12. Was adequate sample volume available?
Yes ☑	No ☐	NA ☐	13. Were all samples received within ½ the holding time or 48 hours, whichever comes first?
Yes ☐	No ☑	NA ☐	14. Were any samples containers missing?
Yes ☐	No ☑	NA ☐	15. Were there any excess samples not listed on COC?
Yes ☑	No ☐	NA ☐	16. Were bubbles present >"pea-size" (¼" or 6mm in diameter) in any VOA vials?
Yes ☐	No ☐	NA ☑	17. Were all metals/O&G/HEM/nutrient samples received at a pH of <2?
Yes ☐	No ☐	NA ☑	18. Were all cyanide and/or sulfide samples received at a pH >12?
Yes ☐	No ☐	NA ☑	19. Were all applicable NH3/TKN/cyanide/phenol/BNA/pest/PCB/herb (<0.2mg/L) and toxicity (<0.1mg/L) samples free of residual chlorine?
Yes ☐	No ☐	NA ☑	20. Were collection temperatures documented on the COC for NC samples?

Sample Preservation (Must be completed for any sample(s) incorrectly preserved or with headspace.)

Sample(s) _____ were received incorrectly preserved and were adjusted accordingly in sample receiving with _____ (H_2SO_4, HNO_3, HCl, NaOH) with the SR # (number)

Sample(s) -005 (2) were received with bubbles >6 mm in diameter.

Sample(s) _____ were received with TRC >0.2 mg/L for NH3/TKN/cyanide/BNA/pest/PCB/herb.

Toxicity sample(s) _____ were received with TRC >0.1 mg/L and were analyzed by method 330.5.

Corrective Action taken, if necessary:

Was client notified: Yes ☐ No ☐ Did client respond: Yes ☐ No ☐
SESI employee: _____ Date of response: _____
Comments: _____

Report of Analysis

ARCADIS U.S., Inc.
30 Patewood Drive
Suite 155
Greenville, SC 29615
Attention: Chase Forman

Project Name: FST-39

Project Number: GP09HAFS.F39A.DGOFI

Lot Number: LD09018

Date Completed: 04/22/2010

Nisreen Saikaly
Project Manager

This report shall not be reproduced, except in its entirety, without the written approval of Shealy Environmental Services, Inc.

The following non-paginated documents are considered part of this report: Chain of Custody Record and Sample Receipt Checklist.

* L D 0 9 0 1 8 *

Case Narrative
ARCADIS U.S., Inc.
Lot Number: LD09018

This Report of Analysis contains the analytical result(s) for the sample(s) listed on the Sample Summary following this Case Narrative. The sample receiving date is documented in the header information associated with each sample.

Sample receipt, sample analysis, and data review have been performed in accordance with the most current approved NELAC standards, the Shealy Environmental Services, Inc. ("Shealy") Quality Assurance Management Plan (QAMP), standard operating procedures (SOPs), and Shealy policies. Any exceptions to the NELAC standards, the QAMP, SOPs or policies are qualified on the results page or discussed below.

If you have any questions regarding this report please contact the Shealy Project Manager listed on the cover page.

Semivolatile Organic Compounds

The surrogate recovery for samples -006, 015 and -018 were outside the acceptance limit. The sample was re-extracted outside the holding time. Both analysis results are reported.

Samples -017 to -026 are associated with batch 31326. The LCS of this batch has thirteen analytes that were slightly below the QC limits. This is due to analyst error. The samples were all outside the holding time when this was discovered. Client was contacted on 04/29/30.

Sample Summary
ARCADIS U.S., Inc.
Lot Number: LD09018

Sample Number	Sample ID	Matrix	Date Sampled	Date Received
001	F39TW05 (10-15)	Aqueous	04/05/2010 1800	04/09/2010
002	F39TW05 (40-45)	Aqueous	04/05/2010 1815	04/09/2010
003	F39TW05 (20-25)	Aqueous	04/06/2010 0945	04/09/2010
004	F39TW05 (30-35)	Aqueous	04/06/2010 1005	04/09/2010
005	F39TW06 (10-15)	Aqueous	04/06/2010 1515	04/09/2010
006	F39TW06 (40-45)	Aqueous	04/06/2010 1530	04/09/2010
007	F39TW06 (20-25)	Aqueous	04/07/2010 0810	04/09/2010
008	F39TW06 (30-35)	Aqueous	04/07/2010 0830	04/09/2010
009	DUP-4	Aqueous	04/07/2010 1200	04/09/2010
010	F39TW07 (40-45)	Aqueous	04/07/2010 1545	04/09/2010
011	F39TW07 (10-15)	Aqueous	04/07/2010 1600	04/09/2010
012	F39TW07 (20-25)	Aqueous	04/08/2010 0845	04/09/2010
013	F39TW07 (30-35)	Aqueous	04/08/2010 0900	04/09/2010
014	F39TW08 (20-25)	Aqueous	04/08/2010 1100	04/09/2010
015	F39TW08 (30-35)	Aqueous	04/08/2010 1120	04/09/2010
016	TRIP BLANK	Aqueous	04/09/2010 0830	04/09/2010
017	F39TW08 (10-15)	Aqueous	04/08/2010 1420	04/10/2010
018	F39TW08 (40-45)	Aqueous	04/08/2010 1440	04/10/2010
019	F39SW-01 (040810)	Aqueous	04/08/2010 0845	04/10/2010
020	F39SW-02 (040810)	Aqueous	04/08/2010 1300	04/10/2010
021	F39SW-03 (040810)	Aqueous	04/08/2010 1400	04/10/2010
022	F39SW-04 (040810)	Aqueous	04/08/2010 1500	04/10/2010
023	F39SW-05 (040810)	Aqueous	04/08/2010 1600	04/10/2010
024	F39SW-06 (040810)	Aqueous	04/08/2010 1630	04/10/2010
025	F39SW-07 (040810)	Aqueous	04/08/2010 1700	04/10/2010
026	DUP01 (040810)	Aqueous	04/08/2010	04/10/2010
027	TRIP BLANK	Aqueous	04/10/2010 1000	04/10/2010
028	F39SED01 (040810)	Solid	04/08/2010 0900	04/10/2010
029	F39SED02 (040810)	Solid	04/08/2010 1315	04/10/2010
030	F39SED03 (040810)	Solid	04/08/2010 1415	04/10/2010
031	F39SED04 (040810)	Solid	04/08/2010 1515	04/10/2010
032	F39SED05 (040810)	Solid	04/08/2010 1615	04/10/2010
033	F39SED06 (040810)	Solid	04/08/2010 1645	04/10/2010
034	F39SED07 (040810)	Solid	04/08/2010 1715	04/10/2010
035	F39SED08 (040810)	Solid	04/08/2010 1745	04/10/2010

(35 samples)

Executive Summary
ARCADIS U.S., Inc.
Lot Number: LD09018

Sample	Sample ID	Matrix	Parameter	Method	Result	Q	Units	Page
001	F39TW05 (10-15)	Aqueous	Acetone	8260B	3.1	J	ug/L	10
001	F39TW05 (10-15)	Aqueous	Benzene	8260B	0.20	J	ug/L	10
001	F39TW05 (10-15)	Aqueous	Carbon disulfide	8260B	0.28	J	ug/L	10
001	F39TW05 (10-15)	Aqueous	Methylene chloride	8260B	0.24	BJ	ug/L	10
002	F39TW05 (40-45)	Aqueous	Acetone	8260B	8.4	J	ug/L	14
002	F39TW05 (40-45)	Aqueous	Benzene	8260B	1.0		ug/L	14
002	F39TW05 (40-45)	Aqueous	Carbon disulfide	8260B	0.48	J	ug/L	14
002	F39TW05 (40-45)	Aqueous	Chloromethane (Methyl chloride)	8260B	0.21	J	ug/L	14
002	F39TW05 (40-45)	Aqueous	Methylene chloride	8260B	0.23	BJ	ug/L	14
003	F39TW05 (20-25)	Aqueous	Acetone	8260B	7.9	J	ug/L	18
003	F39TW05 (20-25)	Aqueous	Benzene	8260B	0.25	J	ug/L	18
003	F39TW05 (20-25)	Aqueous	Carbon disulfide	8260B	0.30	J	ug/L	18
003	F39TW05 (20-25)	Aqueous	Chloromethane (Methyl chloride)	8260B	0.22	J	ug/L	18
003	F39TW05 (20-25)	Aqueous	Methylene chloride	8260B	0.23	BJ	ug/L	18
003	F39TW05 (20-25)	Aqueous	Toluene	8260B	0.24	J	ug/L	18
003	F39TW05 (20-25)	Aqueous	Xylenes (total)	8260B	0.27	J	ug/L	19
004	F39TW05 (30-35)	Aqueous	Acetone	8260B	4.4	J	ug/L	22
004	F39TW05 (30-35)	Aqueous	Benzene	8260B	0.40	J	ug/L	22
004	F39TW05 (30-35)	Aqueous	Carbon disulfide	8260B	0.67		ug/L	22
004	F39TW05 (30-35)	Aqueous	Chloromethane (Methyl chloride)	8260B	0.25	J	ug/L	22
004	F39TW05 (30-35)	Aqueous	Methylene chloride	8260B	0.24	BJ	ug/L	22
004	F39TW05 (30-35)	Aqueous	Xylenes (total)	8260B	0.27	J	ug/L	23
005	F39TW06 (10-15)	Aqueous	Acetone	8260B	5.3	J	ug/L	26
005	F39TW06 (10-15)	Aqueous	Carbon disulfide	8260B	0.24	J	ug/L	26
005	F39TW06 (10-15)	Aqueous	Chloromethane (Methyl chloride)	8260B	0.20	J	ug/L	26
005	F39TW06 (10-15)	Aqueous	trans-1,2-Dichloroethene	8260B	0.25	J	ug/L	26
005	F39TW06 (10-15)	Aqueous	cis-1,2-Dichloroethene	8260B	2.8		ug/L	26
005	F39TW06 (10-15)	Aqueous	Methylene chloride	8260B	0.22	BJ	ug/L	26
005	F39TW06 (10-15)	Aqueous	Tetrachloroethene	8260B	16		ug/L	26
005	F39TW06 (10-15)	Aqueous	Trichloroethene	8260B	38		ug/L	27
006	F39TW06 (40-45)	Aqueous	Acetone	8260B	12	J	ug/L	30
006	F39TW06 (40-45)	Aqueous	Methylene chloride	8260B	0.59	BJ	ug/L	30
007	F39TW06 (20-25)	Aqueous	Acetone	8260B	18		ug/L	36
007	F39TW06 (20-25)	Aqueous	Benzene	8260B	0.95		ug/L	36
007	F39TW06 (20-25)	Aqueous	2-Butanone (MEK)	8260B	3.1	J	ug/L	36
007	F39TW06 (20-25)	Aqueous	Chloromethane (Methyl chloride)	8260B	0.39	J	ug/L	36
007	F39TW06 (20-25)	Aqueous	Cyclohexane	8260B	0.72		ug/L	36
007	F39TW06 (20-25)	Aqueous	cis-1,2-Dichloroethene	8260B	0.70		ug/L	36
007	F39TW06 (20-25)	Aqueous	Ethylbenzene	8260B	0.22	J	ug/L	36
007	F39TW06 (20-25)	Aqueous	2-Hexanone	8260B	0.34	J	ug/L	36
007	F39TW06 (20-25)	Aqueous	Methylene chloride	8260B	0.37	BJ	ug/L	36
007	F39TW06 (20-25)	Aqueous	Toluene	8260B	1.1		ug/L	36
007	F39TW06 (20-25)	Aqueous	Trichloroethene	8260B	4.0		ug/L	37
007	F39TW06 (20-25)	Aqueous	Xylenes (total)	8260B	0.30	J	ug/L	37
008	F39TW06 (30-35)	Aqueous	Acetone	8260B	6.1	J	ug/L	40

Sample	Sample ID	Matrix	Parameter	Method	Result	Q	Units	Page
008	F39TW06 (30-35)	Aqueous	Benzene	8260B	0.25	J	ug/L	40
008	F39TW06 (30-35)	Aqueous	Carbon disulfide	8260B	0.40	J	ug/L	40
008	F39TW06 (30-35)	Aqueous	trans-1,2-Dichloroethene	8260B	0.32	J	ug/L	40
008	F39TW06 (30-35)	Aqueous	cis-1,2-Dichloroethene	8260B	3.1		ug/L	40
008	F39TW06 (30-35)	Aqueous	Methylene chloride	8260B	0.24	BJ	ug/L	40
008	F39TW06 (30-35)	Aqueous	Tetrachloroethene	8260B	5.5		ug/L	40
008	F39TW06 (30-35)	Aqueous	Trichloroethene	8260B	18		ug/L	41
009	DUP-4	Aqueous	Acetone	8260B	7.5	J	ug/L	44
009	DUP-4	Aqueous	Benzene	8260B	0.26	J	ug/L	44
009	DUP-4	Aqueous	Carbon disulfide	8260B	0.25	J	ug/L	44
009	DUP-4	Aqueous	trans-1,2-Dichloroethene	8260B	0.30	J	ug/L	44
009	DUP-4	Aqueous	cis-1,2-Dichloroethene	8260B	2.9		ug/L	44
009	DUP-4	Aqueous	Methylene chloride	8260B	0.26	BJ	ug/L	44
009	DUP-4	Aqueous	Tetrachloroethene	8260B	5.2		ug/L	44
009	DUP-4	Aqueous	Trichloroethene	8260B	17		ug/L	45
010	F39TW07 (40-45)	Aqueous	Acetone	8260B	17		ug/L	48
010	F39TW07 (40-45)	Aqueous	Benzene	8260B	0.22	J	ug/L	48
010	F39TW07 (40-45)	Aqueous	2-Butanone (MEK)	8260B	2.7	J	ug/L	48
010	F39TW07 (40-45)	Aqueous	Carbon disulfide	8260B	0.26	J	ug/L	48
010	F39TW07 (40-45)	Aqueous	Methylene chloride	8260B	0.27	BJ	ug/L	48
010	F39TW07 (40-45)	Aqueous	Toluene	8260B	0.44	J	ug/L	48
010	F39TW07 (40-45)	Aqueous	Diethylphthalate	8270D	2.9	J	ug/L	50
011	F39TW07 (10-15)	Aqueous	Acetone	8260B	20		ug/L	52
011	F39TW07 (10-15)	Aqueous	Carbon disulfide	8260B	0.96		ug/L	52
011	F39TW07 (10-15)	Aqueous	cis-1,2-Dichloroethene	8260B	0.21	J	ug/L	52
011	F39TW07 (10-15)	Aqueous	Methylene chloride	8260B	0.25	BJ	ug/L	52
011	F39TW07 (10-15)	Aqueous	Trichloroethene	8260B	0.76		ug/L	53
012	F39TW07 (20-25)	Aqueous	Acetone	8260B	10		ug/L	56
012	F39TW07 (20-25)	Aqueous	Benzene	8260B	0.30	J	ug/L	56
012	F39TW07 (20-25)	Aqueous	2-Butanone (MEK)	8260B	2.0	J	ug/L	56
012	F39TW07 (20-25)	Aqueous	Carbon disulfide	8260B	0.34	J	ug/L	56
012	F39TW07 (20-25)	Aqueous	trans-1,2-Dichloroethene	8260B	0.12	J	ug/L	56
012	F39TW07 (20-25)	Aqueous	cis-1,2-Dichloroethene	8260B	0.42	J	ug/L	56
012	F39TW07 (20-25)	Aqueous	Methylene chloride	8260B	0.34	BJ	ug/L	56
012	F39TW07 (20-25)	Aqueous	Toluene	8260B	0.41	J	ug/L	56
012	F39TW07 (20-25)	Aqueous	Trichloroethene	8260B	1.6		ug/L	57
013	F39TW07 (30-35)	Aqueous	Acetone	8260B	4.8	J	ug/L	60
013	F39TW07 (30-35)	Aqueous	Carbon disulfide	8260B	0.70		ug/L	60
013	F39TW07 (30-35)	Aqueous	Chloromethane (Methyl chloride)	8260B	0.19	J	ug/L	60
013	F39TW07 (30-35)	Aqueous	cis-1,2-Dichloroethene	8260B	0.13	J	ug/L	60
013	F39TW07 (30-35)	Aqueous	Methylene chloride	8260B	0.23	BJ	ug/L	60
013	F39TW07 (30-35)	Aqueous	Tetrachloroethene	8260B	0.98		ug/L	60
013	F39TW07 (30-35)	Aqueous	Trichloroethene	8260B	0.91		ug/L	61
014	F39TW08 (20-25)	Aqueous	Acetone	8260B	6.6	J	ug/L	64
014	F39TW08 (20-25)	Aqueous	Benzene	8260B	0.32	J	ug/L	64
014	F39TW08 (20-25)	Aqueous	Carbon disulfide	8260B	0.16	J	ug/L	64
014	F39TW08 (20-25)	Aqueous	Chloromethane (Methyl chloride)	8260B	0.20	J	ug/L	64
014	F39TW08 (20-25)	Aqueous	cis-1,2-Dichloroethene	8260B	0.19	J	ug/L	64

Sample	Sample ID	Matrix	Parameter	Method	Result	Q	Units	Page
014	F39TW08 (20-25)	Aqueous	Tetrachloroethene	8260B	2.0		ug/L	64
014	F39TW08 (20-25)	Aqueous	Toluene	8260B	0.38	J	ug/L	64
014	F39TW08 (20-25)	Aqueous	Trichloroethene	8260B	1.7		ug/L	65
015	F39TW08 (30-35)	Aqueous	Acetone	8260B	8.3	J	ug/L	68
015	F39TW08 (30-35)	Aqueous	Benzene	8260B	0.14	J	ug/L	68
015	F39TW08 (30-35)	Aqueous	Carbon disulfide	8260B	0.80		ug/L	68
015	F39TW08 (30-35)	Aqueous	Chloromethane (Methyl chloride)	8260B	0.18	J	ug/L	68
015	F39TW08 (30-35)	Aqueous	cis-1,2-Dichloroethene	8260B	0.26	J	ug/L	68
015	F39TW08 (30-35)	Aqueous	Methylene chloride	8260B	0.22	BJ	ug/L	68
015	F39TW08 (30-35)	Aqueous	Toluene	8260B	0.23	J	ug/L	68
015	F39TW08 (30-35)	Aqueous	Trichloroethene	8260B	0.23	J	ug/L	69
015	F39TW08 (30-35)	Aqueous	2-Methylphenol	8270D	1.3		ug/L	71
015	F39TW08 (30-35)	Aqueous	3 & 4-Methylphenol	8270D	1.2	J	ug/L	71
015	F39TW08 (30-35)	Aqueous	Phenol	8270D	2.4		ug/L	71
016	TRIP BLANK	Aqueous	Methylene chloride	8260B	0.24	BJ	ug/L	74
017	F39TW08 (10-15)	Aqueous	Acetone	8260B	6.0	J	ug/L	76
017	F39TW08 (10-15)	Aqueous	Benzene	8260B	0.14	J	ug/L	76
017	F39TW08 (10-15)	Aqueous	Carbon disulfide	8260B	0.37	J	ug/L	76
017	F39TW08 (10-15)	Aqueous	Chloromethane (Methyl chloride)	8260B	0.27	J	ug/L	76
017	F39TW08 (10-15)	Aqueous	Methylene chloride	8260B	0.23	BJ	ug/L	76
017	F39TW08 (10-15)	Aqueous	Tetrachloroethene	8260B	0.13	J	ug/L	76
017	F39TW08 (10-15)	Aqueous	Toluene	8260B	0.17	J	ug/L	76
017	F39TW08 (10-15)	Aqueous	Trichloroethene	8260B	1.9		ug/L	77
018	F39TW08 (40-45)	Aqueous	Acetone	8260B	6.1	J	ug/L	80
018	F39TW08 (40-45)	Aqueous	Carbon disulfide	8260B	0.23	J	ug/L	80
018	F39TW08 (40-45)	Aqueous	Methylene chloride	8260B	0.66	BJ	ug/L	80
018	F39TW08 (40-45)	Aqueous	Toluene	8260B	0.45	J	ug/L	80
018	F39TW08 (40-45)	Aqueous	Xylenes (total)	8260B	0.48	J	ug/L	81
019	F39SW-01 (040810)	Aqueous	Acetone	8260B	1.7	J	ug/L	86
019	F39SW-01 (040810)	Aqueous	trans-1,2-Dichloroethene	8260B	0.11	J	ug/L	86
019	F39SW-01 (040810)	Aqueous	cis-1,2-Dichloroethene	8260B	1.1		ug/L	86
019	F39SW-01 (040810)	Aqueous	Methylene chloride	8260B	0.23	BJ	ug/L	86
019	F39SW-01 (040810)	Aqueous	Tetrachloroethene	8260B	0.12	J	ug/L	86
019	F39SW-01 (040810)	Aqueous	Trichloroethene	8260B	1.5		ug/L	87
019	F39SW-01 (040810)	Aqueous	Barium	6010C	0.040		mg/L	90
019	F39SW-01 (040810)	Aqueous	Lead	6010C	0.0031	J	mg/L	90
019	F39SW-01 (040810)	Aqueous	Silver	6010C	0.00052	BJ	mg/L	90
020	F39SW-02 (040810)	Aqueous	Acetone	8260B	4.0	J	ug/L	91
020	F39SW-02 (040810)	Aqueous	cis-1,2-Dichloroethene	8260B	0.86		ug/L	91
020	F39SW-02 (040810)	Aqueous	Methylene chloride	8260B	0.22	BJ	ug/L	91
020	F39SW-02 (040810)	Aqueous	Tetrachloroethene	8260B	0.14	J	ug/L	91
020	F39SW-02 (040810)	Aqueous	Trichloroethene	8260B	1.5		ug/L	92
020	F39SW-02 (040810)	Aqueous	Arsenic	6010C	0.0060	BJ	mg/L	95
020	F39SW-02 (040810)	Aqueous	Barium	6010C	0.038		mg/L	95
020	F39SW-02 (040810)	Aqueous	Lead	6010C	0.0039	J	mg/L	95
020	F39SW-02 (040810)	Aqueous	Silver	6010C	0.0011	BJ	mg/L	95
021	F39SW-03 (040810)	Aqueous	Acetone	8260B	5.9	J	ug/L	96
021	F39SW-03 (040810)	Aqueous	cis-1,2-Dichloroethene	8260B	1.1		ug/L	96

Sample	Sample ID	Matrix	Parameter	Method	Result	Q	Units	Page
021	F39SW-03 (040810)	Aqueous	Methylene chloride	8260B	0.20	BJ	ug/L	96
021	F39SW-03 (040810)	Aqueous	Tetrachloroethene	8260B	0.21	J	ug/L	96
021	F39SW-03 (040810)	Aqueous	Trichloroethene	8260B	2.0		ug/L	97
021	F39SW-03 (040810)	Aqueous	Caprolactam	8270D	1.6	J	ug/L	98
021	F39SW-03 (040810)	Aqueous	Barium	6010C	0.043		mg/L	100
021	F39SW-03 (040810)	Aqueous	Chromium	6010C	0.0022	J	mg/L	100
021	F39SW-03 (040810)	Aqueous	Lead	6010C	0.0067	J	mg/L	100
022	F39SW-04 (040810)	Aqueous	Acetone	8260B	3.8	J	ug/L	101
022	F39SW-04 (040810)	Aqueous	cis-1,2-Dichloroethene	8260B	0.43	J	ug/L	101
022	F39SW-04 (040810)	Aqueous	Methylene chloride	8260B	0.22	BJ	ug/L	101
022	F39SW-04 (040810)	Aqueous	Tetrachloroethene	8260B	1.1		ug/L	101
022	F39SW-04 (040810)	Aqueous	Trichloroethene	8260B	4.5		ug/L	102
022	F39SW-04 (040810)	Aqueous	Caprolactam	8270D	2.6	J	ug/L	103
022	F39SW-04 (040810)	Aqueous	Arsenic	6010C	0.017	B	mg/L	105
022	F39SW-04 (040810)	Aqueous	Barium	6010C	0.047		mg/L	105
022	F39SW-04 (040810)	Aqueous	Chromium	6010C	0.0033	J	mg/L	105
022	F39SW-04 (040810)	Aqueous	Lead	6010C	0.0092	J	mg/L	105
023	F39SW-05 (040810)	Aqueous	Acetone	8260B	7.5	J	ug/L	106
023	F39SW-05 (040810)	Aqueous	cis-1,2-Dichloroethene	8260B	0.74		ug/L	106
023	F39SW-05 (040810)	Aqueous	Methylene chloride	8260B	0.25	BJ	ug/L	106
023	F39SW-05 (040810)	Aqueous	Tetrachloroethene	8260B	1.3		ug/L	106
023	F39SW-05 (040810)	Aqueous	Trichloroethene	8260B	4.8		ug/L	107
023	F39SW-05 (040810)	Aqueous	Caprolactam	8270D	1.9	J	ug/L	108
023	F39SW-05 (040810)	Aqueous	Arsenic	6010C	0.019	B	mg/L	110
023	F39SW-05 (040810)	Aqueous	Barium	6010C	0.049		mg/L	110
023	F39SW-05 (040810)	Aqueous	Lead	6010C	0.0067	J	mg/L	110
023	F39SW-05 (040810)	Aqueous	Mercury	7470A	0.000084	J	mg/L	110
024	F39SW-06 (040810)	Aqueous	Acetone	8260B	14		ug/L	111
024	F39SW-06 (040810)	Aqueous	cis-1,2-Dichloroethene	8260B	0.23	J	ug/L	111
024	F39SW-06 (040810)	Aqueous	Methylene chloride	8260B	0.21	BJ	ug/L	111
024	F39SW-06 (040810)	Aqueous	Tetrachloroethene	8260B	0.61		ug/L	111
024	F39SW-06 (040810)	Aqueous	Trichloroethene	8260B	2.3		ug/L	112
024	F39SW-06 (040810)	Aqueous	Arsenic	6010C	0.019	B	mg/L	115
024	F39SW-06 (040810)	Aqueous	Barium	6010C	0.049		mg/L	115
024	F39SW-06 (040810)	Aqueous	Lead	6010C	0.0046	J	mg/L	115
025	F39SW-07 (040810)	Aqueous	Acetone	8260B	7.6	J	ug/L	116
025	F39SW-07 (040810)	Aqueous	trans-1,2-Dichloroethene	8260B	0.10	J	ug/L	116
025	F39SW-07 (040810)	Aqueous	cis-1,2-Dichloroethene	8260B	0.63		ug/L	116
025	F39SW-07 (040810)	Aqueous	Methylene chloride	8260B	0.22	BJ	ug/L	116
025	F39SW-07 (040810)	Aqueous	Tetrachloroethene	8260B	0.81		ug/L	116
025	F39SW-07 (040810)	Aqueous	Trichloroethene	8260B	3.3		ug/L	117
025	F39SW-07 (040810)	Aqueous	Caprolactam	8270D	1.9	J	ug/L	118
025	F39SW-07 (040810)	Aqueous	Arsenic	6010C	0.022	B	mg/L	120
025	F39SW-07 (040810)	Aqueous	Barium	6010C	0.047		mg/L	120
025	F39SW-07 (040810)	Aqueous	Chromium	6010C	0.0039	J	mg/L	120
025	F39SW-07 (040810)	Aqueous	Lead	6010C	0.0051	J	mg/L	120
026	DUP01 (040810)	Aqueous	Acetone	8260B	3.1	J	ug/L	121
026	DUP01 (040810)	Aqueous	cis-1,2-Dichloroethene	8260B	0.40	J	ug/L	121

Sample	Sample ID	Matrix	Parameter	Method	Result	Q	Units	Page
026	DUP01 (040810)	Aqueous	Methylene chloride	8260B	0.21	BJ	ug/L	121
026	DUP01 (040810)	Aqueous	Tetrachloroethene	8260B	1.0		ug/L	121
026	DUP01 (040810)	Aqueous	Trichloroethene	8260B	4.3		ug/L	122
026	DUP01 (040810)	Aqueous	Caprolactam	8270D	2.3	J	ug/L	123
026	DUP01 (040810)	Aqueous	Arsenic	6010C	0.016	B	mg/L	125
026	DUP01 (040810)	Aqueous	Barium	6010C	0.047		mg/L	125
026	DUP01 (040810)	Aqueous	Chromium	6010C	0.0042	J	mg/L	125
026	DUP01 (040810)	Aqueous	Lead	6010C	0.0075	J	mg/L	125
027	TRIP BLANK	Aqueous	Acetone	8260B	2.1	J	ug/L	126
027	TRIP BLANK	Aqueous	Methylene chloride	8260B	0.27	BJ	ug/L	126
028	F39SED01 (040810)	Solid	Arsenic	6010C	0.57	J	mg/kg	132
028	F39SED01 (040810)	Solid	Barium	6010C	3.9		mg/kg	132
028	F39SED01 (040810)	Solid	Cadmium	6010C	0.14	B	mg/kg	132
028	F39SED01 (040810)	Solid	Chromium	6010C	3.0	B	mg/kg	132
028	F39SED01 (040810)	Solid	Lead	6010C	3.9		mg/kg	132
028	F39SED01 (040810)	Solid	Selenium	6010C	0.35	BJ	mg/kg	132
029	F39SED02 (040810)	Solid	bis(2-Ethylhexyl)phthalate	8270D	93		ug/kg	135
029	F39SED02 (040810)	Solid	3 & 4-Methylphenol	8270D	160	J	ug/kg	136
029	F39SED02 (040810)	Solid	Arsenic	6010C	0.52	J	mg/kg	137
029	F39SED02 (040810)	Solid	Barium	6010C	6.9		mg/kg	137
029	F39SED02 (040810)	Solid	Cadmium	6010C	0.11	BJ	mg/kg	137
029	F39SED02 (040810)	Solid	Chromium	6010C	1.9	B	mg/kg	137
029	F39SED02 (040810)	Solid	Lead	6010C	2.6		mg/kg	137
029	F39SED02 (040810)	Solid	Mercury	7471B	0.0098	J	mg/kg	137
029	F39SED02 (040810)	Solid	Selenium	6010C	0.40	BJ	mg/kg	137
030	F39SED03 (040810)	Solid	Acetone	8260B	20	J	ug/kg	138
030	F39SED03 (040810)	Solid	Trichloroethene	8260B	2.9	J	ug/kg	139
030	F39SED03 (040810)	Solid	Arsenic	6010C	1.0		mg/kg	142
030	F39SED03 (040810)	Solid	Barium	6010C	5.4		mg/kg	142
030	F39SED03 (040810)	Solid	Cadmium	6010C	0.096	BJ	mg/kg	142
030	F39SED03 (040810)	Solid	Chromium	6010C	6.3	B	mg/kg	142
030	F39SED03 (040810)	Solid	Lead	6010C	9.3		mg/kg	142
030	F39SED03 (040810)	Solid	Mercury	7471B	0.062	J	mg/kg	142
030	F39SED03 (040810)	Solid	Selenium	6010C	0.51	BJ	mg/kg	142
031	F39SED04 (040810)	Solid	Acetone	8260B	47		ug/kg	143
031	F39SED04 (040810)	Solid	Tetrachloroethene	8260B	11		ug/kg	143
031	F39SED04 (040810)	Solid	Trichloroethene	8260B	19		ug/kg	144
031	F39SED04 (040810)	Solid	Arsenic	6010C	0.50	J	mg/kg	147
031	F39SED04 (040810)	Solid	Barium	6010C	7.5		mg/kg	147
031	F39SED04 (040810)	Solid	Cadmium	6010C	0.053	BJ	mg/kg	147
031	F39SED04 (040810)	Solid	Chromium	6010C	1.4	B	mg/kg	147
031	F39SED04 (040810)	Solid	Lead	6010C	1.9		mg/kg	147
031	F39SED04 (040810)	Solid	Selenium	6010C	0.26	BJ	mg/kg	147
032	F39SED05 (040810)	Solid	Acetone	8260B	86		ug/kg	148
032	F39SED05 (040810)	Solid	cis-1,2-Dichloroethene	8260B	3.0	J	ug/kg	148
032	F39SED05 (040810)	Solid	Tetrachloroethene	8260B	19		ug/kg	148
032	F39SED05 (040810)	Solid	Trichloroethene	8260B	38		ug/kg	149
032	F39SED05 (040810)	Solid	Arsenic	6010C	0.81		mg/kg	152

Sample	Sample ID	Matrix	Parameter	Method	Result	Q	Units	Page
032	F39SED05 (040810)	Solid	Barium	6010C	0.80	J	mg/kg	152
032	F39SED05 (040810)	Solid	Cadmium	6010C	0.033	BJ	mg/kg	152
032	F39SED05 (040810)	Solid	Chromium	6010C	1.3	B	mg/kg	152
032	F39SED05 (040810)	Solid	Lead	6010C	0.64		mg/kg	152
032	F39SED05 (040810)	Solid	Selenium	6010C	0.21	BJ	mg/kg	152
033	F39SED06 (040810)	Solid	Acetone	8260B	35		ug/kg	153
033	F39SED06 (040810)	Solid	cis-1,2-Dichloroethene	8260B	2.0	J	ug/kg	153
033	F39SED06 (040810)	Solid	Trichloroethene	8260B	17		ug/kg	154
033	F39SED06 (040810)	Solid	Arsenic	6010C	3.7		mg/kg	157
033	F39SED06 (040810)	Solid	Barium	6010C	1.6	J	mg/kg	157
033	F39SED06 (040810)	Solid	Cadmium	6010C	0.11	BJ	mg/kg	157
033	F39SED06 (040810)	Solid	Chromium	6010C	1.3	B	mg/kg	157
033	F39SED06 (040810)	Solid	Lead	6010C	1.5		mg/kg	157
033	F39SED06 (040810)	Solid	Selenium	6010C	0.33	BJ	mg/kg	157
034	F39SED07 (040810)	Solid	Acetone	8260B	130		ug/kg	158
034	F39SED07 (040810)	Solid	cis-1,2-Dichloroethene	8260B	1.5	J	ug/kg	158
034	F39SED07 (040810)	Solid	Trichloroethene	8260B	12		ug/kg	159
034	F39SED07 (040810)	Solid	Arsenic	6010C	2.9		mg/kg	162
034	F39SED07 (040810)	Solid	Barium	6010C	0.90	J	mg/kg	162
034	F39SED07 (040810)	Solid	Cadmium	6010C	0.087	BJ	mg/kg	162
034	F39SED07 (040810)	Solid	Chromium	6010C	0.85	B	mg/kg	162
034	F39SED07 (040810)	Solid	Lead	6010C	1.5		mg/kg	162
035	F39SED08 (040810)	Solid	Acetone	8260B	94		ug/kg	163
035	F39SED08 (040810)	Solid	Benzaldehyde	8270D	610		ug/kg	165
035	F39SED08 (040810)	Solid	Benzo(b)fluoranthene	8270D	140		ug/kg	165
035	F39SED08 (040810)	Solid	2-Methylnaphthalene	8270D	140		ug/kg	166
035	F39SED08 (040810)	Solid	Phenanthrene	8270D	140		ug/kg	166
035	F39SED08 (040810)	Solid	Arsenic	6010C	17		mg/kg	167
035	F39SED08 (040810)	Solid	Barium	6010C	16		mg/kg	167
035	F39SED08 (040810)	Solid	Cadmium	6010C	0.60	B	mg/kg	167
035	F39SED08 (040810)	Solid	Chromium	6010C	4.6	B	mg/kg	167
035	F39SED08 (040810)	Solid	Lead	6010C	5.1		mg/kg	167
035	F39SED08 (040810)	Solid	Mercury	7471B	0.030	J	mg/kg	167
035	F39SED08 (040810)	Solid	Selenium	6010C	1.0	B	mg/kg	167

(271 detections)

Volatile Organic Compounds by GC/MS

Client: ARCADIS U.S., Inc.
Laboratory ID: LD09018-001
Description: F39TW05 (10-15)
Matrix: Aqueous
Date Sampled: 04/05/2010 1800
Date Received: 04/09/2010

Run	Prep Method	Analytical Method	Dilution	Analysis Date	Analyst	Prep Date	Batch
1	5030B	8260B	1	04/14/2010 1828	LBS		31526

Parameter	CAS Number	Analytical Method	Result	Q	PQL	MDL	Units	Run
Acetone	67-64-1	8260B	3.1	J	10	0.061	ug/L	1
Benzene	71-43-2	8260B	0.20	J	0.50	0.027	ug/L	1
Bromodichloromethane	75-27-4	8260B	ND		0.50	0.17	ug/L	1
Bromoform	75-25-2	8260B	ND		0.50	0.010	ug/L	1
Bromomethane (Methyl bromide)	74-83-9	8260B	ND		0.50	0.20	ug/L	1
2-Butanone (MEK)	78-93-3	8260B	ND		10	2.0	ug/L	1
Carbon disulfide	75-15-0	8260B	0.28	J	0.50	0.097	ug/L	1
Carbon tetrachloride	56-23-5	8260B	ND		0.50	0.085	ug/L	1
Chlorobenzene	108-90-7	8260B	ND		0.50	0.17	ug/L	1
Chloroethane	75-00-3	8260B	ND		0.50	0.17	ug/L	1
Chloroform	67-66-3	8260B	ND		0.50	0.17	ug/L	1
Chloromethane (Methyl chloride)	74-87-3	8260B	ND		0.50	0.17	ug/L	1
Cyclohexane	110-82-7	8260B	ND		0.50	0.30	ug/L	1
1,2-Dibromo-3-chloropropane (DBCP)	96-12-8	8260B	ND		0.50	0.069	ug/L	1
Dibromochloromethane	124-48-1	8260B	ND		0.50	0.17	ug/L	1
1,2-Dibromoethane (EDB)	106-93-4	8260B	ND		0.50	0.061	ug/L	1
1,3-Dichlorobenzene	541-73-1	8260B	ND		0.50	0.17	ug/L	1
1,2-Dichlorobenzene	95-50-1	8260B	ND		0.50	0.17	ug/L	1
1,4-Dichlorobenzene	106-46-7	8260B	ND		0.50	0.17	ug/L	1
Dichlorodifluoromethane	75-71-8	8260B	ND		0.50	0.071	ug/L	1
1,1-Dichloroethane	75-34-3	8260B	ND		0.50	0.054	ug/L	1
1,2-Dichloroethane	107-06-2	8260B	ND		0.50	0.023	ug/L	1
trans-1,2-Dichloroethene	156-60-5	8260B	ND		0.50	0.079	ug/L	1
1,1-Dichloroethene	75-35-4	8260B	ND		0.50	0.094	ug/L	1
cis-1,2-Dichloroethene	156-59-2	8260B	ND		0.50	0.087	ug/L	1
1,2-Dichloropropane	78-87-5	8260B	ND		0.50	0.081	ug/L	1
trans-1,3-Dichloropropene	10061-02-6	8260B	ND		0.50	0.18	ug/L	1
cis-1,3-Dichloropropene	10061-01-5	8260B	ND		0.50	0.090	ug/L	1
Ethylbenzene	100-41-4	8260B	ND		0.50	0.17	ug/L	1
2-Hexanone	591-78-6	8260B	ND		10	0.27	ug/L	1
Isopropylbenzene	98-82-8	8260B	ND		0.50	0.029	ug/L	1
Methyl acetate	79-20-9	8260B	ND		1.0	0.30	ug/L	1
Methyl tertiary butyl ether (MTBE)	1634-04-4	8260B	ND		0.50	0.019	ug/L	1
4-Methyl-2-pentanone	108-10-1	8260B	ND		10	0.31	ug/L	1
Methylcyclohexane	108-87-2	8260B	ND		5.0	0.95	ug/L	1
Methylene chloride	75-09-2	8260B	0.24	BJ	0.50	0.17	ug/L	1
Styrene	100-42-5	8260B	ND		0.50	0.015	ug/L	1
1,1,2,2-Tetrachloroethane	79-34-5	8260B	ND		0.50	0.013	ug/L	1
Tetrachloroethene	127-18-4	8260B	ND		0.50	0.014	ug/L	1
Toluene	108-88-3	8260B	ND		0.50	0.17	ug/L	1
1,1,2-Trichloro-1,2,2-Trifluoroethane	76-13-1	8260B	ND		0.50	0.30	ug/L	1
1,2,4-Trichlorobenzene	120-82-1	8260B	ND		0.50	0.17	ug/L	1
1,1,1-Trichloroethane	71-55-6	8260B	ND		0.50	0.029	ug/L	1
1,1,2-Trichloroethane	79-00-5	8260B	ND		0.50	0.031	ug/L	1

PQL = Practical quantitation limit
B = Detected in the method blank
E = Quantitation of compound exceeded the calibration range
ND = Not detected at or above the MDL
J = Estimated result < PQL and ≥ MDL
P = The RPD between two GC columns exceeds 40%
Where applicable, all soil sample analysis are reported on a dry weight basis unless flagged with a "W"
N = Recovery is out of criteria
H = Out of holding time

Volatile Organic Compounds by GC/MS

Client: ARCADIS U.S., Inc.
Laboratory ID: LD09018-001
Description: F39TW05 (10-15)
Matrix: Aqueous
Date Sampled: 04/05/2010 1800
Date Received: 04/09/2010

Run	Prep Method	Analytical Method	Dilution	Analysis Date	Analyst	Prep Date	Batch
1	5030B	8260B	1	04/14/2010 1828	LBS		31526

Parameter	CAS Number	Analytical Method	Result	Q	PQL	MDL	Units	Run
Trichloroethene	79-01-6	8260B	ND		0.50	0.024	ug/L	1
Trichlorofluoromethane	75-69-4	8260B	ND		0.50	0.051	ug/L	1
Vinyl chloride	75-01-4	8260B	ND		0.50	0.065	ug/L	1
Xylenes (total)	1330-20-7	8260B	ND		0.50	0.17	ug/L	1

Surrogate	Q	Run 1 % Recovery	Acceptance Limits
1,2-Dichloroethane-d4		97	70-130
Bromofluorobenzene		92	70-130
Toluene-d8		101	70-130

PQL = Practical quantitation limit
B = Detected in the method blank
E = Quantitation of compound exceeded the calibration range
ND = Not detected at or above the MDL
J = Estimated result < PQL and ≥ MDL
P = The RPD between two GC columns exceeds 40%
Where applicable, all soil sample analysis are reported on a dry weight basis unless flagged with a "W"
N = Recovery is out of criteria
H = Out of holding time

Semivolatile Organic Compounds by GC/MS

Client: ARCADIS U.S., Inc.
Laboratory ID: LD09018-001
Description: F39TW05 (10-15)
Matrix: Aqueous
Date Sampled: 04/05/2010 1800
Date Received: 04/09/2010

Run	Prep Method	Analytical Method	Dilution	Analysis Date	Analyst	Prep Date	Batch
1	3520C	8270D	1	04/14/2010 0014	JGH	04/11/2010 1745	31258

Parameter	CAS Number	Analytical Method	Result	Q	PQL	MDL	Units	Run
Acenaphthene	83-32-9	8270D	ND		1.0	0.092	ug/L	1
Acenaphthylene	208-96-8	8270D	ND		1.0	0.16	ug/L	1
Acetophenone	98-86-2	8270D	ND		1.0	0.33	ug/L	1
Anthracene	120-12-7	8270D	ND		1.0	0.13	ug/L	1
Atrazine	1912-24-9	8270D	ND		1.0	0.20	ug/L	1
Benzaldehyde	100-52-7	8270D	ND		5.1	1.0	ug/L	1
Benzo(a)anthracene	56-55-3	8270D	ND		1.0	0.15	ug/L	1
Benzo(a)pyrene	50-32-8	8270D	ND		1.0	0.16	ug/L	1
Benzo(b)fluoranthene	205-99-2	8270D	ND		1.0	0.20	ug/L	1
Benzo(g,h,i)perylene	191-24-2	8270D	ND		1.0	0.23	ug/L	1
Benzo(k)fluoranthene	207-08-9	8270D	ND		1.0	0.12	ug/L	1
1,1'-Biphenyl	92-52-4	8270D	ND		1.0	0.20	ug/L	1
4-Bromophenyl phenyl ether	101-55-3	8270D	ND		1.0	0.12	ug/L	1
Butyl benzyl phthalate	85-68-7	8270D	ND		5.1	1.7	ug/L	1
Caprolactam	105-60-2	8270D	ND		5.1	1.2	ug/L	1
Carbazole	86-74-8	8270D	ND		1.0	0.26	ug/L	1
4-Chloro-3-methyl phenol	59-50-7	8270D	ND		1.0	0.22	ug/L	1
4-Chloroaniline	106-47-8	8270D	ND		1.0	0.13	ug/L	1
bis(2-Chloroethoxy)methane	111-91-1	8270D	ND		1.0	0.13	ug/L	1
bis(2-Chloroethyl)ether	111-44-4	8270D	ND		1.0	0.13	ug/L	1
bis(2-Chloroisopropyl)ether	108-60-1	8270D	ND		1.0	0.082	ug/L	1
2-Chloronaphthalene	91-58-7	8270D	ND		1.0	0.12	ug/L	1
2-Chlorophenol	95-57-8	8270D	ND		1.0	0.13	ug/L	1
4-Chlorophenyl phenyl ether	7005-72-3	8270D	ND		1.0	0.11	ug/L	1
Chrysene	218-01-9	8270D	ND		1.0	0.12	ug/L	1
Dibenzo(a,h)anthracene	53-70-3	8270D	ND		1.0	0.13	ug/L	1
Dibenzofuran	132-64-9	8270D	ND		1.0	0.16	ug/L	1
3,3'-Dichlorobenzidine	91-94-1	8270D	ND		5.1	0.83	ug/L	1
2,4-Dichlorophenol	120-83-2	8270D	ND		1.0	0.15	ug/L	1
Diethylphthalate	84-66-2	8270D	ND		5.1	1.7	ug/L	1
Dimethyl phthalate	131-11-3	8270D	ND		5.1	1.7	ug/L	1
2,4-Dimethylphenol	105-67-9	8270D	ND		1.0	0.32	ug/L	1
Di-n-butyl phthalate	84-74-2	8270D	ND		5.1	1.7	ug/L	1
4,6-Dinitro-2-methylphenol	534-52-1	8270D	ND		5.1	1.5	ug/L	1
2,4-Dinitrophenol	51-28-5	8270D	ND		5.1	0.26	ug/L	1
2,4-Dinitrotoluene	121-14-2	8270D	ND		2.0	0.46	ug/L	1
2,6-Dinitrotoluene	606-20-2	8270D	ND		2.0	0.41	ug/L	1
Di-n-octylphthalate	117-84-0	8270D	ND		5.1	1.7	ug/L	1
bis(2-Ethylhexyl)phthalate	117-81-7	8270D	ND		5.1	1.7	ug/L	1
Fluoranthene	206-44-0	8270D	ND		1.0	0.21	ug/L	1
Fluorene	86-73-7	8270D	ND		1.0	0.10	ug/L	1
Hexachlorobenzene	118-74-1	8270D	ND		1.0	0.21	ug/L	1
Hexachlorobutadiene	87-68-3	8270D	ND		1.0	0.092	ug/L	1
Hexachlorocyclopentadiene	77-47-4	8270D	ND		5.1	0.23	ug/L	1

PQL = Practical quantitation limit
B = Detected in the method blank
E = Quantitation of compound exceeded the calibration range
ND = Not detected at or above the MDL
J = Estimated result < PQL and ≥ MDL
P = The RPD between two GC columns exceeds 40%
Where applicable, all soil sample analysis are reported on a dry weight basis unless flagged with a "W"
N = Recovery is out of criteria
H = Out of holding time

Semivolatile Organic Compounds by GC/MS

Client: ARCADIS U.S., Inc.
Laboratory ID: LD09018-001
Description: F39TW05 (10-15)
Matrix: Aqueous
Date Sampled: 04/05/2010 1800
Date Received: 04/09/2010

Run	Prep Method	Analytical Method	Dilution	Analysis Date	Analyst	Prep Date	Batch
1	3520C	8270D	1	04/14/2010 0014	JGH	04/11/2010 1745	31258

Parameter	CAS Number	Analytical Method	Result	Q	PQL	MDL	Units	Run
Hexachloroethane	67-72-1	8270D	ND		1.0	0.11	ug/L	1
Indeno(1,2,3-c,d)pyrene	193-39-5	8270D	ND		1.0	0.23	ug/L	1
Isophorone	78-59-1	8270D	ND		1.0	0.082	ug/L	1
2-Methylnaphthalene	91-57-6	8270D	ND		1.0	0.082	ug/L	1
2-Methylphenol	95-48-7	8270D	ND		1.0	0.17	ug/L	1
3 & 4-Methylphenol	106-44-5	8270D	ND		2.0	0.58	ug/L	1
Naphthalene	91-20-3	8270D	ND		1.0	0.071	ug/L	1
2-Nitroaniline	88-74-4	8270D	ND		2.0	0.56	ug/L	1
3-Nitroaniline	99-09-2	8270D	ND		2.0	0.79	ug/L	1
4-Nitroaniline	100-01-6	8270D	ND		2.0	0.40	ug/L	1
Nitrobenzene	98-95-3	8270D	ND		1.0	0.10	ug/L	1
2-Nitrophenol	88-75-5	8270D	ND		2.0	0.28	ug/L	1
4-Nitrophenol	100-02-7	8270D	ND		5.1	0.65	ug/L	1
N-Nitrosodi-n-propylamine	621-64-7	8270D	ND		1.0	0.082	ug/L	1
N-Nitrosodiphenylamine (Diphenylamine)	86-30-6	8270D	ND		1.0	0.39	ug/L	1
Pentachlorophenol	87-86-5	8270D	ND		5.1	0.55	ug/L	1
Phenanthrene	85-01-8	8270D	ND		1.0	0.18	ug/L	1
Phenol	108-95-2	8270D	ND		1.0	0.11	ug/L	1
Pyrene	129-00-0	8270D	ND		1.0	0.16	ug/L	1
2,4,5-Trichlorophenol	95-95-4	8270D	ND		1.0	0.18	ug/L	1
2,4,6-Trichlorophenol	88-06-2	8270D	ND		1.0	0.22	ug/L	1

Surrogate	Q	Run 1 % Recovery	Acceptance Limits
2-Fluorobiphenyl		58	37-129
2-Fluorophenol		52	24-127
Nitrobenzene-d5		62	38-127
Phenol-d5		55	28-128
Terphenyl-d14		37	10-148
2,4,6-Tribromophenol		69	41-144

PQL = Practical quantitation limit
B = Detected in the method blank
E = Quantitation of compound exceeded the calibration range
ND = Not detected at or above the MDL
J = Estimated result < PQL and ≥ MDL
P = The RPD between two GC columns exceeds 40%
Where applicable, all soil sample analysis are reported on a dry weight basis unless flagged with a "W"
N = Recovery is out of criteria
H = Out of holding time

Volatile Organic Compounds by GC/MS

Client: ARCADIS U.S., Inc.
Laboratory ID: LD09018-002
Description: F39TW05 (40-45)
Matrix: Aqueous
Date Sampled: 04/05/2010 1815
Date Received: 04/09/2010

Run	Prep Method	Analytical Method	Dilution	Analysis Date	Analyst	Prep Date	Batch
1	5030B	8260B	1	04/14/2010 0540	LBS		31466

Parameter	CAS Number	Analytical Method	Result	Q	PQL	MDL	Units	Run
Acetone	67-64-1	8260B	8.4	J	10	0.061	ug/L	1
Benzene	71-43-2	8260B	1.0		0.50	0.027	ug/L	1
Bromodichloromethane	75-27-4	8260B	ND		0.50	0.17	ug/L	1
Bromoform	75-25-2	8260B	ND		0.50	0.010	ug/L	1
Bromomethane (Methyl bromide)	74-83-9	8260B	ND		0.50	0.20	ug/L	1
2-Butanone (MEK)	78-93-3	8260B	ND		10	2.0	ug/L	1
Carbon disulfide	75-15-0	8260B	0.48	J	0.50	0.097	ug/L	1
Carbon tetrachloride	56-23-5	8260B	ND		0.50	0.085	ug/L	1
Chlorobenzene	108-90-7	8260B	ND		0.50	0.17	ug/L	1
Chloroethane	75-00-3	8260B	ND		0.50	0.17	ug/L	1
Chloroform	67-66-3	8260B	ND		0.50	0.17	ug/L	1
Chloromethane (Methyl chloride)	74-87-3	8260B	0.21	J	0.50	0.17	ug/L	1
Cyclohexane	110-82-7	8260B	ND		0.50	0.30	ug/L	1
1,2-Dibromo-3-chloropropane (DBCP)	96-12-8	8260B	ND		0.50	0.069	ug/L	1
Dibromochloromethane	124-48-1	8260B	ND		0.50	0.17	ug/L	1
1,2-Dibromoethane (EDB)	106-93-4	8260B	ND		0.50	0.061	ug/L	1
1,3-Dichlorobenzene	541-73-1	8260B	ND		0.50	0.17	ug/L	1
1,2-Dichlorobenzene	95-50-1	8260B	ND		0.50	0.17	ug/L	1
1,4-Dichlorobenzene	106-46-7	8260B	ND		0.50	0.17	ug/L	1
Dichlorodifluoromethane	75-71-8	8260B	ND		0.50	0.071	ug/L	1
1,1-Dichloroethane	75-34-3	8260B	ND		0.50	0.054	ug/L	1
1,2-Dichloroethane	107-06-2	8260B	ND		0.50	0.023	ug/L	1
trans-1,2-Dichloroethene	156-60-5	8260B	ND		0.50	0.079	ug/L	1
1,1-Dichloroethene	75-35-4	8260B	ND		0.50	0.094	ug/L	1
cis-1,2-Dichloroethene	156-59-2	8260B	ND		0.50	0.087	ug/L	1
1,2-Dichloropropane	78-87-5	8260B	ND		0.50	0.081	ug/L	1
trans-1,3-Dichloropropene	10061-02-6	8260B	ND		0.50	0.18	ug/L	1
cis-1,3-Dichloropropene	10061-01-5	8260B	ND		0.50	0.090	ug/L	1
Ethylbenzene	100-41-4	8260B	ND		0.50	0.17	ug/L	1
2-Hexanone	591-78-6	8260B	ND		10	0.27	ug/L	1
Isopropylbenzene	98-82-8	8260B	ND		0.50	0.029	ug/L	1
Methyl acetate	79-20-9	8260B	ND		1.0	0.30	ug/L	1
Methyl tertiary butyl ether (MTBE)	1634-04-4	8260B	ND		0.50	0.019	ug/L	1
4-Methyl-2-pentanone	108-10-1	8260B	ND		10	0.31	ug/L	1
Methylcyclohexane	108-87-2	8260B	ND		5.0	0.95	ug/L	1
Methylene chloride	75-09-2	8260B	0.23	BJ	0.50	0.17	ug/L	1
Styrene	100-42-5	8260B	ND		0.50	0.015	ug/L	1
1,1,2,2-Tetrachloroethane	79-34-5	8260B	ND		0.50	0.013	ug/L	1
Tetrachloroethene	127-18-4	8260B	ND		0.50	0.014	ug/L	1
Toluene	108-88-3	8260B	ND		0.50	0.17	ug/L	1
1,1,2-Trichloro-1,2,2-Trifluoroethane	76-13-1	8260B	ND		0.50	0.30	ug/L	1
1,2,4-Trichlorobenzene	120-82-1	8260B	ND		0.50	0.17	ug/L	1
1,1,1-Trichloroethane	71-55-6	8260B	ND		0.50	0.029	ug/L	1
1,1,2-Trichloroethane	79-00-5	8260B	ND		0.50	0.031	ug/L	1

PQL = Practical quantitation limit
B = Detected in the method blank
E = Quantitation of compound exceeded the calibration range
ND = Not detected at or above the MDL
J = Estimated result < PQL and ≥ MDL
P = The RPD between two GC columns exceeds 40%
Where applicable, all soil sample analysis are reported on a dry weight basis unless flagged with a "W"
N = Recovery is out of criteria
H = Out of holding time

Volatile Organic Compounds by GC/MS

Client: ARCADIS U.S., Inc.
Laboratory ID: LD09018-002
Description: F39TW05 (40-45)
Matrix: Aqueous
Date Sampled: 04/05/2010 1815
Date Received: 04/09/2010

Run	Prep Method	Analytical Method	Dilution	Analysis Date	Analyst	Prep Date	Batch
1	5030B	8260B	1	04/14/2010 0540	LBS		31466

Parameter	CAS Number	Analytical Method	Result	Q	PQL	MDL	Units	Run
Trichloroethene	79-01-6	8260B	ND		0.50	0.024	ug/L	1
Trichlorofluoromethane	75-69-4	8260B	ND		0.50	0.051	ug/L	1
Vinyl chloride	75-01-4	8260B	ND		0.50	0.065	ug/L	1
Xylenes (total)	1330-20-7	8260B	ND		0.50	0.17	ug/L	1

Surrogate	Q	Run 1 % Recovery	Acceptance Limits
1,2-Dichloroethane-d4		109	70-130
Bromofluorobenzene		93	70-130
Toluene-d8		107	70-130

PQL = Practical quantitation limit
B = Detected in the method blank
E = Quantitation of compound exceeded the calibration range
ND = Not detected at or above the MDL
J = Estimated result < PQL and ≥ MDL
P = The RPD between two GC columns exceeds 40%
Where applicable, all soil sample analysis are reported on a dry weight basis unless flagged with a "W"
N = Recovery is out of criteria
H = Out of holding time

Semivolatile Organic Compounds by GC/MS

Client: ARCADIS U.S., Inc.
Laboratory ID: LD09018-002
Description: F39TW05 (40-45)
Matrix: Aqueous
Date Sampled: 04/05/2010 1815
Date Received: 04/09/2010

Run	Prep Method	Analytical Method	Dilution	Analysis Date	Analyst	Prep Date	Batch
1	3520C	8270D	1	04/14/2010 0033	JGH	04/11/2010 1745	31258

Parameter	CAS Number	Analytical Method	Result	Q	PQL	MDL	Units	Run
Acenaphthene	83-32-9	8270D	ND		1.0	0.091	ug/L	1
Acenaphthylene	208-96-8	8270D	ND		1.0	0.16	ug/L	1
Acetophenone	98-86-2	8270D	ND		1.0	0.32	ug/L	1
Anthracene	120-12-7	8270D	ND		1.0	0.13	ug/L	1
Atrazine	1912-24-9	8270D	ND		1.0	0.20	ug/L	1
Benzaldehyde	100-52-7	8270D	ND		5.1	1.0	ug/L	1
Benzo(a)anthracene	56-55-3	8270D	ND		1.0	0.15	ug/L	1
Benzo(a)pyrene	50-32-8	8270D	ND		1.0	0.16	ug/L	1
Benzo(b)fluoranthene	205-99-2	8270D	ND		1.0	0.20	ug/L	1
Benzo(g,h,i)perylene	191-24-2	8270D	ND		1.0	0.23	ug/L	1
Benzo(k)fluoranthene	207-08-9	8270D	ND		1.0	0.12	ug/L	1
1,1'-Biphenyl	92-52-4	8270D	ND		1.0	0.20	ug/L	1
4-Bromophenyl phenyl ether	101-55-3	8270D	ND		1.0	0.12	ug/L	1
Butyl benzyl phthalate	85-68-7	8270D	ND		5.1	1.7	ug/L	1
Caprolactam	105-60-2	8270D	ND		5.1	1.2	ug/L	1
Carbazole	86-74-8	8270D	ND		1.0	0.25	ug/L	1
4-Chloro-3-methyl phenol	59-50-7	8270D	ND		1.0	0.22	ug/L	1
4-Chloroaniline	106-47-8	8270D	ND		1.0	0.13	ug/L	1
bis(2-Chloroethoxy)methane	111-91-1	8270D	ND		1.0	0.13	ug/L	1
bis(2-Chloroethyl)ether	111-44-4	8270D	ND		1.0	0.13	ug/L	1
bis(2-Chloroisopropyl)ether	108-60-1	8270D	ND		1.0	0.081	ug/L	1
2-Chloronaphthalene	91-58-7	8270D	ND		1.0	0.12	ug/L	1
2-Chlorophenol	95-57-8	8270D	ND		1.0	0.13	ug/L	1
4-Chlorophenyl phenyl ether	7005-72-3	8270D	ND		1.0	0.11	ug/L	1
Chrysene	218-01-9	8270D	ND		1.0	0.12	ug/L	1
Dibenzo(a,h)anthracene	53-70-3	8270D	ND		1.0	0.13	ug/L	1
Dibenzofuran	132-64-9	8270D	ND		1.0	0.16	ug/L	1
3,3'-Dichlorobenzidine	91-94-1	8270D	ND		5.1	0.82	ug/L	1
2,4-Dichlorophenol	120-83-2	8270D	ND		1.0	0.15	ug/L	1
Diethylphthalate	84-66-2	8270D	ND		5.1	1.7	ug/L	1
Dimethyl phthalate	131-11-3	8270D	ND		5.1	1.7	ug/L	1
2,4-Dimethylphenol	105-67-9	8270D	ND		1.0	0.31	ug/L	1
Di-n-butyl phthalate	84-74-2	8270D	ND		5.1	1.7	ug/L	1
4,6-Dinitro-2-methylphenol	534-52-1	8270D	ND		5.1	1.5	ug/L	1
2,4-Dinitrophenol	51-28-5	8270D	ND		5.1	0.25	ug/L	1
2,4-Dinitrotoluene	121-14-2	8270D	ND		2.0	0.45	ug/L	1
2,6-Dinitrotoluene	606-20-2	8270D	ND		2.0	0.40	ug/L	1
Di-n-octylphthalate	117-84-0	8270D	ND		5.1	1.7	ug/L	1
bis(2-Ethylhexyl)phthalate	117-81-7	8270D	ND		5.1	1.7	ug/L	1
Fluoranthene	206-44-0	8270D	ND		1.0	0.21	ug/L	1
Fluorene	86-73-7	8270D	ND		1.0	0.10	ug/L	1
Hexachlorobenzene	118-74-1	8270D	ND		1.0	0.21	ug/L	1
Hexachlorobutadiene	87-68-3	8270D	ND		1.0	0.091	ug/L	1
Hexachlorocyclopentadiene	77-47-4	8270D	ND		5.1	0.23	ug/L	1

PQL = Practical quantitation limit
B = Detected in the method blank
E = Quantitation of compound exceeded the calibration range
ND = Not detected at or above the MDL
J = Estimated result < PQL and ≥ MDL
P = The RPD between two GC columns exceeds 40%
Where applicable, all soil sample analysis are reported on a dry weight basis unless flagged with a "W"
N = Recovery is out of criteria
H = Out of holding time

Semivolatile Organic Compounds by GC/MS

Client: ARCADIS U.S., Inc.
Laboratory ID: LD09018-002
Description: F39TW05 (40-45)
Matrix: Aqueous
Date Sampled: 04/05/2010 1815
Date Received: 04/09/2010

Run	Prep Method	Analytical Method	Dilution	Analysis Date	Analyst	Prep Date	Batch
1	3520C	8270D	1	04/14/2010 0033	JGH	04/11/2010 1745	31258

Parameter	CAS Number	Analytical Method	Result	Q	PQL	MDL	Units	Run
Hexachloroethane	67-72-1	8270D	ND		1.0	0.11	ug/L	1
Indeno(1,2,3-c,d)pyrene	193-39-5	8270D	ND		1.0	0.23	ug/L	1
Isophorone	78-59-1	8270D	ND		1.0	0.081	ug/L	1
2-Methylnaphthalene	91-57-6	8270D	ND		1.0	0.081	ug/L	1
2-Methylphenol	95-48-7	8270D	ND		1.0	0.17	ug/L	1
3 & 4-Methylphenol	106-44-5	8270D	ND		2.0	0.58	ug/L	1
Naphthalene	91-20-3	8270D	ND		1.0	0.071	ug/L	1
2-Nitroaniline	88-74-4	8270D	ND		2.0	0.56	ug/L	1
3-Nitroaniline	99-09-2	8270D	ND		2.0	0.78	ug/L	1
4-Nitroaniline	100-01-6	8270D	ND		2.0	0.39	ug/L	1
Nitrobenzene	98-95-3	8270D	ND		1.0	0.10	ug/L	1
2-Nitrophenol	88-75-5	8270D	ND		2.0	0.27	ug/L	1
4-Nitrophenol	100-02-7	8270D	ND		5.1	0.65	ug/L	1
N-Nitrosodi-n-propylamine	621-64-7	8270D	ND		1.0	0.081	ug/L	1
N-Nitrosodiphenylamine (Diphenylamine)	86-30-6	8270D	ND		1.0	0.38	ug/L	1
Pentachlorophenol	87-86-5	8270D	ND		5.1	0.55	ug/L	1
Phenanthrene	85-01-8	8270D	ND		1.0	0.18	ug/L	1
Phenol	108-95-2	8270D	ND		1.0	0.11	ug/L	1
Pyrene	129-00-0	8270D	ND		1.0	0.16	ug/L	1
2,4,5-Trichlorophenol	95-95-4	8270D	ND		1.0	0.18	ug/L	1
2,4,6-Trichlorophenol	88-06-2	8270D	ND		1.0	0.22	ug/L	1

Surrogate	Q	Run 1 % Recovery	Acceptance Limits
2-Fluorobiphenyl		49	37-129
2-Fluorophenol		42	24-127
Nitrobenzene-d5		48	38-127
Phenol-d5		47	28-128
Terphenyl-d14		23	10-148
2,4,6-Tribromophenol		62	41-144

PQL = Practical quantitation limit
B = Detected in the method blank
E = Quantitation of compound exceeded the calibration range
ND = Not detected at or above the MDL
J = Estimated result < PQL and ≥ MDL
P = The RPD between two GC columns exceeds 40%
Where applicable, all soil sample analysis are reported on a dry weight basis unless flagged with a "W"
N = Recovery is out of criteria
H = Out of holding time

Volatile Organic Compounds by GC/MS

Client: ARCADIS U.S., Inc.
Laboratory ID: LD09018-003
Description: F39TW05 (20-25)
Matrix: Aqueous
Date Sampled: 04/06/2010 0945
Date Received: 04/09/2010

Run	Prep Method	Analytical Method	Dilution	Analysis Date	Analyst	Prep Date	Batch
1	5030B	8260B	1	04/14/2010 0601	LBS		31466

Parameter	CAS Number	Analytical Method	Result	Q	PQL	MDL	Units	Run
Acetone	67-64-1	8260B	7.9	J	10	0.061	ug/L	1
Benzene	71-43-2	8260B	0.25	J	0.50	0.027	ug/L	1
Bromodichloromethane	75-27-4	8260B	ND		0.50	0.17	ug/L	1
Bromoform	75-25-2	8260B	ND		0.50	0.010	ug/L	1
Bromomethane (Methyl bromide)	74-83-9	8260B	ND		0.50	0.20	ug/L	1
2-Butanone (MEK)	78-93-3	8260B	ND		10	2.0	ug/L	1
Carbon disulfide	75-15-0	8260B	0.30	J	0.50	0.097	ug/L	1
Carbon tetrachloride	56-23-5	8260B	ND		0.50	0.085	ug/L	1
Chlorobenzene	108-90-7	8260B	ND		0.50	0.17	ug/L	1
Chloroethane	75-00-3	8260B	ND		0.50	0.17	ug/L	1
Chloroform	67-66-3	8260B	ND		0.50	0.17	ug/L	1
Chloromethane (Methyl chloride)	74-87-3	8260B	0.22	J	0.50	0.17	ug/L	1
Cyclohexane	110-82-7	8260B	ND		0.50	0.30	ug/L	1
1,2-Dibromo-3-chloropropane (DBCP)	96-12-8	8260B	ND		0.50	0.069	ug/L	1
Dibromochloromethane	124-48-1	8260B	ND		0.50	0.17	ug/L	1
1,2-Dibromoethane (EDB)	106-93-4	8260B	ND		0.50	0.061	ug/L	1
1,3-Dichlorobenzene	541-73-1	8260B	ND		0.50	0.17	ug/L	1
1,2-Dichlorobenzene	95-50-1	8260B	ND		0.50	0.17	ug/L	1
1,4-Dichlorobenzene	106-46-7	8260B	ND		0.50	0.17	ug/L	1
Dichlorodifluoromethane	75-71-8	8260B	ND		0.50	0.071	ug/L	1
1,1-Dichloroethane	75-34-3	8260B	ND		0.50	0.054	ug/L	1
1,2-Dichloroethane	107-06-2	8260B	ND		0.50	0.023	ug/L	1
trans-1,2-Dichloroethene	156-60-5	8260B	ND		0.50	0.079	ug/L	1
1,1-Dichloroethene	75-35-4	8260B	ND		0.50	0.094	ug/L	1
cis-1,2-Dichloroethene	156-59-2	8260B	ND		0.50	0.087	ug/L	1
1,2-Dichloropropane	78-87-5	8260B	ND		0.50	0.081	ug/L	1
trans-1,3-Dichloropropene	10061-02-6	8260B	ND		0.50	0.18	ug/L	1
cis-1,3-Dichloropropene	10061-01-5	8260B	ND		0.50	0.090	ug/L	1
Ethylbenzene	100-41-4	8260B	ND		0.50	0.17	ug/L	1
2-Hexanone	591-78-6	8260B	ND		10	0.27	ug/L	1
Isopropylbenzene	98-82-8	8260B	ND		0.50	0.029	ug/L	1
Methyl acetate	79-20-9	8260B	ND		1.0	0.30	ug/L	1
Methyl tertiary butyl ether (MTBE)	1634-04-4	8260B	ND		0.50	0.019	ug/L	1
4-Methyl-2-pentanone	108-10-1	8260B	ND		10	0.31	ug/L	1
Methylcyclohexane	108-87-2	8260B	ND		5.0	0.95	ug/L	1
Methylene chloride	75-09-2	8260B	0.23	BJ	0.50	0.17	ug/L	1
Styrene	100-42-5	8260B	ND		0.50	0.015	ug/L	1
1,1,2,2-Tetrachloroethane	79-34-5	8260B	ND		0.50	0.013	ug/L	1
Tetrachloroethene	127-18-4	8260B	ND		0.50	0.014	ug/L	1
Toluene	108-88-3	8260B	0.24	J	0.50	0.17	ug/L	1
1,1,2-Trichloro-1,2,2-Trifluoroethane	76-13-1	8260B	ND		0.50	0.30	ug/L	1
1,2,4-Trichlorobenzene	120-82-1	8260B	ND		0.50	0.17	ug/L	1
1,1,1-Trichloroethane	71-55-6	8260B	ND		0.50	0.029	ug/L	1
1,1,2-Trichloroethane	79-00-5	8260B	ND		0.50	0.031	ug/L	1

PQL = Practical quantitation limit
B = Detected in the method blank
E = Quantitation of compound exceeded the calibration range
ND = Not detected at or above the MDL
J = Estimated result < PQL and ≥ MDL
P = The RPD between two GC columns exceeds 40%
Where applicable, all soil sample analysis are reported on a dry weight basis unless flagged with a "W"
N = Recovery is out of criteria
H = Out of holding time

Volatile Organic Compounds by GC/MS

Client: ARCADIS U.S., Inc.
Laboratory ID: LD09018-003
Description: F39TW05 (20-25)
Matrix: Aqueous
Date Sampled: 04/06/2010 0945
Date Received: 04/09/2010

Run	Prep Method	Analytical Method	Dilution	Analysis Date	Analyst	Prep Date	Batch
1	5030B	8260B	1	04/14/2010 0601	LBS		31466

Parameter	CAS Number	Analytical Method	Result	Q	PQL	MDL	Units	Run
Trichloroethene	79-01-6	8260B	ND		0.50	0.024	ug/L	1
Trichlorofluoromethane	75-69-4	8260B	ND		0.50	0.051	ug/L	1
Vinyl chloride	75-01-4	8260B	ND		0.50	0.065	ug/L	1
Xylenes (total)	1330-20-7	8260B	0.27	J	0.50	0.17	ug/L	1

Surrogate	Q	Run 1 % Recovery	Acceptance Limits
1,2-Dichloroethane-d4		106	70-130
Bromofluorobenzene		94	70-130
Toluene-d8		107	70-130

PQL = Practical quantitation limit
B = Detected in the method blank
E = Quantitation of compound exceeded the calibration range
ND = Not detected at or above the MDL
J = Estimated result < PQL and ≥ MDL
P = The RPD between two GC columns exceeds 40%
Where applicable, all soil sample analysis are reported on a dry weight basis unless flagged with a "W"
N = Recovery is out of criteria
H = Out of holding time

Semivolatile Organic Compounds by GC/MS

Client: ARCADIS U.S., Inc.
Laboratory ID: LD09018-003
Description: F39TW05 (20-25)
Matrix: Aqueous
Date Sampled: 04/06/2010 0945
Date Received: 04/09/2010

Run	Prep Method	Analytical Method	Dilution	Analysis Date	Analyst	Prep Date	Batch
1	3520C	8270D	1	04/14/2010 0052	JGH	04/11/2010 1745	31258

Parameter	CAS Number	Analytical Method	Result	Q	PQL	MDL	Units	Run
Acenaphthene	83-32-9	8270D	ND		1.0	0.092	ug/L	1
Acenaphthylene	208-96-8	8270D	ND		1.0	0.16	ug/L	1
Acetophenone	98-86-2	8270D	ND		1.0	0.33	ug/L	1
Anthracene	120-12-7	8270D	ND		1.0	0.13	ug/L	1
Atrazine	1912-24-9	8270D	ND		1.0	0.20	ug/L	1
Benzaldehyde	100-52-7	8270D	ND		5.1	1.0	ug/L	1
Benzo(a)anthracene	56-55-3	8270D	ND		1.0	0.15	ug/L	1
Benzo(a)pyrene	50-32-8	8270D	ND		1.0	0.16	ug/L	1
Benzo(b)fluoranthene	205-99-2	8270D	ND		1.0	0.20	ug/L	1
Benzo(g,h,i)perylene	191-24-2	8270D	ND		1.0	0.23	ug/L	1
Benzo(k)fluoranthene	207-08-9	8270D	ND		1.0	0.12	ug/L	1
1,1'-Biphenyl	92-52-4	8270D	ND		1.0	0.20	ug/L	1
4-Bromophenyl phenyl ether	101-55-3	8270D	ND		1.0	0.12	ug/L	1
Butyl benzyl phthalate	85-68-7	8270D	ND		5.1	1.7	ug/L	1
Caprolactam	105-60-2	8270D	ND		5.1	1.2	ug/L	1
Carbazole	86-74-8	8270D	ND		1.0	0.26	ug/L	1
4-Chloro-3-methyl phenol	59-50-7	8270D	ND		1.0	0.22	ug/L	1
4-Chloroaniline	106-47-8	8270D	ND		1.0	0.13	ug/L	1
bis(2-Chloroethoxy)methane	111-91-1	8270D	ND		1.0	0.13	ug/L	1
bis(2-Chloroethyl)ether	111-44-4	8270D	ND		1.0	0.13	ug/L	1
bis(2-Chloroisopropyl)ether	108-60-1	8270D	ND		1.0	0.082	ug/L	1
2-Chloronaphthalene	91-58-7	8270D	ND		1.0	0.12	ug/L	1
2-Chlorophenol	95-57-8	8270D	ND		1.0	0.13	ug/L	1
4-Chlorophenyl phenyl ether	7005-72-3	8270D	ND		1.0	0.11	ug/L	1
Chrysene	218-01-9	8270D	ND		1.0	0.12	ug/L	1
Dibenzo(a,h)anthracene	53-70-3	8270D	ND		1.0	0.13	ug/L	1
Dibenzofuran	132-64-9	8270D	ND		1.0	0.16	ug/L	1
3,3'-Dichlorobenzidine	91-94-1	8270D	ND		5.1	0.83	ug/L	1
2,4-Dichlorophenol	120-83-2	8270D	ND		1.0	0.15	ug/L	1
Diethylphthalate	84-66-2	8270D	ND		5.1	1.7	ug/L	1
Dimethyl phthalate	131-11-3	8270D	ND		5.1	1.7	ug/L	1
2,4-Dimethylphenol	105-67-9	8270D	ND		1.0	0.32	ug/L	1
Di-n-butyl phthalate	84-74-2	8270D	ND		5.1	1.7	ug/L	1
4,6-Dinitro-2-methylphenol	534-52-1	8270D	ND		5.1	1.5	ug/L	1
2,4-Dinitrophenol	51-28-5	8270D	ND		5.1	0.26	ug/L	1
2,4-Dinitrotoluene	121-14-2	8270D	ND		2.0	0.46	ug/L	1
2,6-Dinitrotoluene	606-20-2	8270D	ND		2.0	0.41	ug/L	1
Di-n-octylphthalate	117-84-0	8270D	ND		5.1	1.7	ug/L	1
bis(2-Ethylhexyl)phthalate	117-81-7	8270D	ND		5.1	1.7	ug/L	1
Fluoranthene	206-44-0	8270D	ND		1.0	0.21	ug/L	1
Fluorene	86-73-7	8270D	ND		1.0	0.10	ug/L	1
Hexachlorobenzene	118-74-1	8270D	ND		1.0	0.21	ug/L	1
Hexachlorobutadiene	87-68-3	8270D	ND		1.0	0.092	ug/L	1
Hexachlorocyclopentadiene	77-47-4	8270D	ND		5.1	0.23	ug/L	1

PQL = Practical quantitation limit
B = Detected in the method blank
E = Quantitation of compound exceeded the calibration range
ND = Not detected at or above the MDL
J = Estimated result < PQL and ≥ MDL
P = The RPD between two GC columns exceeds 40%
Where applicable, all soil sample analysis are reported on a dry weight basis unless flagged with a "W"
N = Recovery is out of criteria
H = Out of holding time

Semivolatile Organic Compounds by GC/MS

Client: ARCADIS U.S., Inc.
Laboratory ID: LD09018-003
Description: F39TW05 (20-25)
Matrix: Aqueous
Date Sampled: 04/06/2010 0945
Date Received: 04/09/2010

Run	Prep Method	Analytical Method	Dilution	Analysis Date	Analyst	Prep Date	Batch
1	3520C	8270D	1	04/14/2010 0052	JGH	04/11/2010 1745	31258

Parameter	CAS Number	Analytical Method	Result	Q	PQL	MDL	Units	Run
Hexachloroethane	67-72-1	8270D	ND		1.0	0.11	ug/L	1
Indeno(1,2,3-c,d)pyrene	193-39-5	8270D	ND		1.0	0.23	ug/L	1
Isophorone	78-59-1	8270D	ND		1.0	0.082	ug/L	1
2-Methylnaphthalene	91-57-6	8270D	ND		1.0	0.082	ug/L	1
2-Methylphenol	95-48-7	8270D	ND		1.0	0.17	ug/L	1
3 & 4-Methylphenol	106-44-5	8270D	ND		2.0	0.58	ug/L	1
Naphthalene	91-20-3	8270D	ND		1.0	0.071	ug/L	1
2-Nitroaniline	88-74-4	8270D	ND		2.0	0.56	ug/L	1
3-Nitroaniline	99-09-2	8270D	ND		2.0	0.79	ug/L	1
4-Nitroaniline	100-01-6	8270D	ND		2.0	0.40	ug/L	1
Nitrobenzene	98-95-3	8270D	ND		1.0	0.10	ug/L	1
2-Nitrophenol	88-75-5	8270D	ND		2.0	0.28	ug/L	1
4-Nitrophenol	100-02-7	8270D	ND		5.1	0.65	ug/L	1
N-Nitrosodi-n-propylamine	621-64-7	8270D	ND		1.0	0.082	ug/L	1
N-Nitrosodiphenylamine (Diphenylamine)	86-30-6	8270D	ND		1.0	0.39	ug/L	1
Pentachlorophenol	87-86-5	8270D	ND		5.1	0.55	ug/L	1
Phenanthrene	85-01-8	8270D	ND		1.0	0.18	ug/L	1
Phenol	108-95-2	8270D	ND		1.0	0.11	ug/L	1
Pyrene	129-00-0	8270D	ND		1.0	0.16	ug/L	1
2,4,5-Trichlorophenol	95-95-4	8270D	ND		1.0	0.18	ug/L	1
2,4,6-Trichlorophenol	88-06-2	8270D	ND		1.0	0.22	ug/L	1

Surrogate	Q	Run 1 % Recovery	Acceptance Limits
2-Fluorobiphenyl		57	37-129
2-Fluorophenol		50	24-127
Nitrobenzene-d5		59	38-127
Phenol-d5		56	28-128
Terphenyl-d14		42	10-148
2,4,6-Tribromophenol		72	41-144

PQL = Practical quantitation limit
B = Detected in the method blank
E = Quantitation of compound exceeded the calibration range
ND = Not detected at or above the MDL
J = Estimated result < PQL and ≥ MDL
P = The RPD between two GC columns exceeds 40%
Where applicable, all soil sample analysis are reported on a dry weight basis unless flagged with a "W"
N = Recovery is out of criteria
H = Out of holding time

Volatile Organic Compounds by GC/MS

Client: ARCADIS U.S., Inc.
Laboratory ID: LD09018-004
Description: F39TW05 (30-35)
Matrix: Aqueous
Date Sampled: 04/06/2010 1005
Date Received: 04/09/2010

Run	Prep Method	Analytical Method	Dilution	Analysis Date	Analyst	Prep Date	Batch
1	5030B	8260B	1	04/14/2010 0623	LBS		31466

Parameter	CAS Number	Analytical Method	Result	Q	PQL	MDL	Units	Run
Acetone	67-64-1	8260B	4.4	J	10	0.061	ug/L	1
Benzene	71-43-2	8260B	0.40	J	0.50	0.027	ug/L	1
Bromodichloromethane	75-27-4	8260B	ND		0.50	0.17	ug/L	1
Bromoform	75-25-2	8260B	ND		0.50	0.010	ug/L	1
Bromomethane (Methyl bromide)	74-83-9	8260B	ND		0.50	0.20	ug/L	1
2-Butanone (MEK)	78-93-3	8260B	ND		10	2.0	ug/L	1
Carbon disulfide	75-15-0	8260B	0.67		0.50	0.097	ug/L	1
Carbon tetrachloride	56-23-5	8260B	ND		0.50	0.085	ug/L	1
Chlorobenzene	108-90-7	8260B	ND		0.50	0.17	ug/L	1
Chloroethane	75-00-3	8260B	ND		0.50	0.17	ug/L	1
Chloroform	67-66-3	8260B	ND		0.50	0.17	ug/L	1
Chloromethane (Methyl chloride)	74-87-3	8260B	0.25	J	0.50	0.17	ug/L	1
Cyclohexane	110-82-7	8260B	ND		0.50	0.30	ug/L	1
1,2-Dibromo-3-chloropropane (DBCP)	96-12-8	8260B	ND		0.50	0.069	ug/L	1
Dibromochloromethane	124-48-1	8260B	ND		0.50	0.17	ug/L	1
1,2-Dibromoethane (EDB)	106-93-4	8260B	ND		0.50	0.061	ug/L	1
1,3-Dichlorobenzene	541-73-1	8260B	ND		0.50	0.17	ug/L	1
1,2-Dichlorobenzene	95-50-1	8260B	ND		0.50	0.17	ug/L	1
1,4-Dichlorobenzene	106-46-7	8260B	ND		0.50	0.17	ug/L	1
Dichlorodifluoromethane	75-71-8	8260B	ND		0.50	0.071	ug/L	1
1,1-Dichloroethane	75-34-3	8260B	ND		0.50	0.054	ug/L	1
1,2-Dichloroethane	107-06-2	8260B	ND		0.50	0.023	ug/L	1
trans-1,2-Dichloroethene	156-60-5	8260B	ND		0.50	0.079	ug/L	1
1,1-Dichloroethene	75-35-4	8260B	ND		0.50	0.094	ug/L	1
cis-1,2-Dichloroethene	156-59-2	8260B	ND		0.50	0.087	ug/L	1
1,2-Dichloropropane	78-87-5	8260B	ND		0.50	0.081	ug/L	1
trans-1,3-Dichloropropene	10061-02-6	8260B	ND		0.50	0.18	ug/L	1
cis-1,3-Dichloropropene	10061-01-5	8260B	ND		0.50	0.090	ug/L	1
Ethylbenzene	100-41-4	8260B	ND		0.50	0.17	ug/L	1
2-Hexanone	591-78-6	8260B	ND		10	0.27	ug/L	1
Isopropylbenzene	98-82-8	8260B	ND		0.50	0.029	ug/L	1
Methyl acetate	79-20-9	8260B	ND		1.0	0.30	ug/L	1
Methyl tertiary butyl ether (MTBE)	1634-04-4	8260B	ND		0.50	0.019	ug/L	1
4-Methyl-2-pentanone	108-10-1	8260B	ND		10	0.31	ug/L	1
Methylcyclohexane	108-87-2	8260B	ND		5.0	0.95	ug/L	1
Methylene chloride	75-09-2	8260B	0.24	BJ	0.50	0.17	ug/L	1
Styrene	100-42-5	8260B	ND		0.50	0.015	ug/L	1
1,1,2,2-Tetrachloroethane	79-34-5	8260B	ND		0.50	0.013	ug/L	1
Tetrachloroethene	127-18-4	8260B	ND		0.50	0.014	ug/L	1
Toluene	108-88-3	8260B	ND		0.50	0.17	ug/L	1
1,1,2-Trichloro-1,2,2-Trifluoroethane	76-13-1	8260B	ND		0.50	0.30	ug/L	1
1,2,4-Trichlorobenzene	120-82-1	8260B	ND		0.50	0.17	ug/L	1
1,1,1-Trichloroethane	71-55-6	8260B	ND		0.50	0.029	ug/L	1
1,1,2-Trichloroethane	79-00-5	8260B	ND		0.50	0.031	ug/L	1

PQL = Practical quantitation limit
B = Detected in the method blank
E = Quantitation of compound exceeded the calibration range
ND = Not detected at or above the MDL
J = Estimated result < PQL and ≥ MDL
P = The RPD between two GC columns exceeds 40%
Where applicable, all soil sample analysis are reported on a dry weight basis unless flagged with a "W"
N = Recovery is out of criteria
H = Out of holding time

Volatile Organic Compounds by GC/MS

Client: ARCADIS U.S., Inc.
Laboratory ID: LD09018-004
Description: F39TW05 (30-35)
Matrix: Aqueous
Date Sampled: 04/06/2010 1005
Date Received: 04/09/2010

Run	Prep Method	Analytical Method	Dilution	Analysis Date	Analyst	Prep Date	Batch
1	5030B	8260B	1	04/14/2010 0623	LBS		31466

Parameter	CAS Number	Analytical Method	Result	Q	PQL	MDL	Units	Run
Trichloroethene	79-01-6	8260B	ND		0.50	0.024	ug/L	1
Trichlorofluoromethane	75-69-4	8260B	ND		0.50	0.051	ug/L	1
Vinyl chloride	75-01-4	8260B	ND		0.50	0.065	ug/L	1
Xylenes (total)	1330-20-7	8260B	0.27	J	0.50	0.17	ug/L	1

Surrogate	Q	Run 1 % Recovery	Acceptance Limits
1,2-Dichloroethane-d4		108	70-130
Bromofluorobenzene		93	70-130
Toluene-d8		107	70-130

PQL = Practical quantitation limit
B = Detected in the method blank
E = Quantitation of compound exceeded the calibration range
ND = Not detected at or above the MDL
J = Estimated result < PQL and ≥ MDL
P = The RPD between two GC columns exceeds 40%
Where applicable, all soil sample analysis are reported on a dry weight basis unless flagged with a "W"
N = Recovery is out of criteria
H = Out of holding time

Semivolatile Organic Compounds by GC/MS

Client: ARCADIS U.S., Inc.
Laboratory ID: LD09018-004
Description: F39TW05 (30-35)
Matrix: Aqueous
Date Sampled: 04/06/2010 1005
Date Received: 04/09/2010

Run	Prep Method	Analytical Method	Dilution	Analysis Date	Analyst	Prep Date	Batch
1	3520C	8270D	1	04/14/2010 0111	JGH	04/11/2010 1745	31258

Parameter	CAS Number	Analytical Method	Result	Q	PQL	MDL	Units	Run
Acenaphthene	83-32-9	8270D	ND		1.0	0.092	ug/L	1
Acenaphthylene	208-96-8	8270D	ND		1.0	0.16	ug/L	1
Acetophenone	98-86-2	8270D	ND		1.0	0.33	ug/L	1
Anthracene	120-12-7	8270D	ND		1.0	0.13	ug/L	1
Atrazine	1912-24-9	8270D	ND		1.0	0.20	ug/L	1
Benzaldehyde	100-52-7	8270D	ND		5.1	1.0	ug/L	1
Benzo(a)anthracene	56-55-3	8270D	ND		1.0	0.15	ug/L	1
Benzo(a)pyrene	50-32-8	8270D	ND		1.0	0.16	ug/L	1
Benzo(b)fluoranthene	205-99-2	8270D	ND		1.0	0.20	ug/L	1
Benzo(g,h,i)perylene	191-24-2	8270D	ND		1.0	0.23	ug/L	1
Benzo(k)fluoranthene	207-08-9	8270D	ND		1.0	0.12	ug/L	1
1,1'-Biphenyl	92-52-4	8270D	ND		1.0	0.20	ug/L	1
4-Bromophenyl phenyl ether	101-55-3	8270D	ND		1.0	0.12	ug/L	1
Butyl benzyl phthalate	85-68-7	8270D	ND		5.1	1.7	ug/L	1
Caprolactam	105-60-2	8270D	ND		5.1	1.2	ug/L	1
Carbazole	86-74-8	8270D	ND		1.0	0.26	ug/L	1
4-Chloro-3-methyl phenol	59-50-7	8270D	ND		1.0	0.22	ug/L	1
4-Chloroaniline	106-47-8	8270D	ND		1.0	0.13	ug/L	1
bis(2-Chloroethoxy)methane	111-91-1	8270D	ND		1.0	0.13	ug/L	1
bis(2-Chloroethyl)ether	111-44-4	8270D	ND		1.0	0.13	ug/L	1
bis(2-Chloroisopropyl)ether	108-60-1	8270D	ND		1.0	0.082	ug/L	1
2-Chloronaphthalene	91-58-7	8270D	ND		1.0	0.12	ug/L	1
2-Chlorophenol	95-57-8	8270D	ND		1.0	0.13	ug/L	1
4-Chlorophenyl phenyl ether	7005-72-3	8270D	ND		1.0	0.11	ug/L	1
Chrysene	218-01-9	8270D	ND		1.0	0.12	ug/L	1
Dibenzo(a,h)anthracene	53-70-3	8270D	ND		1.0	0.13	ug/L	1
Dibenzofuran	132-64-9	8270D	ND		1.0	0.16	ug/L	1
3,3'-Dichlorobenzidine	91-94-1	8270D	ND		5.1	0.83	ug/L	1
2,4-Dichlorophenol	120-83-2	8270D	ND		1.0	0.15	ug/L	1
Diethylphthalate	84-66-2	8270D	ND		5.1	1.7	ug/L	1
Dimethyl phthalate	131-11-3	8270D	ND		5.1	1.7	ug/L	1
2,4-Dimethylphenol	105-67-9	8270D	ND		1.0	0.32	ug/L	1
Di-n-butyl phthalate	84-74-2	8270D	ND		5.1	1.7	ug/L	1
4,6-Dinitro-2-methylphenol	534-52-1	8270D	ND		5.1	1.5	ug/L	1
2,4-Dinitrophenol	51-28-5	8270D	ND		5.1	0.26	ug/L	1
2,4-Dinitrotoluene	121-14-2	8270D	ND		2.0	0.46	ug/L	1
2,6-Dinitrotoluene	606-20-2	8270D	ND		2.0	0.41	ug/L	1
Di-n-octylphthalate	117-84-0	8270D	ND		5.1	1.7	ug/L	1
bis(2-Ethylhexyl)phthalate	117-81-7	8270D	ND		5.1	1.7	ug/L	1
Fluoranthene	206-44-0	8270D	ND		1.0	0.21	ug/L	1
Fluorene	86-73-7	8270D	ND		1.0	0.10	ug/L	1
Hexachlorobenzene	118-74-1	8270D	ND		1.0	0.21	ug/L	1
Hexachlorobutadiene	87-68-3	8270D	ND		1.0	0.092	ug/L	1
Hexachlorocyclopentadiene	77-47-4	8270D	ND		5.1	0.23	ug/L	1

PQL = Practical quantitation limit
B = Detected in the method blank
E = Quantitation of compound exceeded the calibration range
ND = Not detected at or above the MDL
J = Estimated result < PQL and ≥ MDL
P = The RPD between two GC columns exceeds 40%
Where applicable, all soil sample analysis are reported on a dry weight basis unless flagged with a "W"
N = Recovery is out of criteria
H = Out of holding time

Semivolatile Organic Compounds by GC/MS

Client: ARCADIS U.S., Inc.
Laboratory ID: LD09018-004
Description: F39TW05 (30-35)
Matrix: Aqueous
Date Sampled: 04/06/2010 1005
Date Received: 04/09/2010

Run	Prep Method	Analytical Method	Dilution	Analysis Date	Analyst	Prep Date	Batch
1	3520C	8270D	1	04/14/2010 0111	JGH	04/11/2010 1745	31258

Parameter	CAS Number	Analytical Method	Result	Q	PQL	MDL	Units	Run
Hexachloroethane	67-72-1	8270D	ND		1.0	0.11	ug/L	1
Indeno(1,2,3-c,d)pyrene	193-39-5	8270D	ND		1.0	0.23	ug/L	1
Isophorone	78-59-1	8270D	ND		1.0	0.082	ug/L	1
2-Methylnaphthalene	91-57-6	8270D	ND		1.0	0.082	ug/L	1
2-Methylphenol	95-48-7	8270D	ND		1.0	0.17	ug/L	1
3 & 4-Methylphenol	106-44-5	8270D	ND		2.0	0.58	ug/L	1
Naphthalene	91-20-3	8270D	ND		1.0	0.071	ug/L	1
2-Nitroaniline	88-74-4	8270D	ND		2.0	0.56	ug/L	1
3-Nitroaniline	99-09-2	8270D	ND		2.0	0.79	ug/L	1
4-Nitroaniline	100-01-6	8270D	ND		2.0	0.40	ug/L	1
Nitrobenzene	98-95-3	8270D	ND		1.0	0.10	ug/L	1
2-Nitrophenol	88-75-5	8270D	ND		2.0	0.28	ug/L	1
4-Nitrophenol	100-02-7	8270D	ND		5.1	0.65	ug/L	1
N-Nitrosodi-n-propylamine	621-64-7	8270D	ND		1.0	0.082	ug/L	1
N-Nitrosodiphenylamine (Diphenylamine)	86-30-6	8270D	ND		1.0	0.39	ug/L	1
Pentachlorophenol	87-86-5	8270D	ND		5.1	0.55	ug/L	1
Phenanthrene	85-01-8	8270D	ND		1.0	0.18	ug/L	1
Phenol	108-95-2	8270D	ND		1.0	0.11	ug/L	1
Pyrene	129-00-0	8270D	ND		1.0	0.16	ug/L	1
2,4,5-Trichlorophenol	95-95-4	8270D	ND		1.0	0.18	ug/L	1
2,4,6-Trichlorophenol	88-06-2	8270D	ND		1.0	0.22	ug/L	1

Surrogate	Q	Run 1 % Recovery	Acceptance Limits
2-Fluorobiphenyl		52	37-129
2-Fluorophenol		48	24-127
Nitrobenzene-d5		54	38-127
Phenol-d5		50	28-128
Terphenyl-d14		40	10-148
2,4,6-Tribromophenol		67	41-144

PQL = Practical quantitation limit
B = Detected in the method blank
E = Quantitation of compound exceeded the calibration range
ND = Not detected at or above the MDL
J = Estimated result < PQL and ≥ MDL
P = The RPD between two GC columns exceeds 40%
Where applicable, all soil sample analysis are reported on a dry weight basis unless flagged with a "W"
N = Recovery is out of criteria
H = Out of holding time

Volatile Organic Compounds by GC/MS

Client: ARCADIS U.S., Inc.
Laboratory ID: LD09018-005
Description: F39TW06 (10-15)
Matrix: Aqueous
Date Sampled: 04/06/2010 1515
Date Received: 04/09/2010

Run	Prep Method	Analytical Method	Dilution	Analysis Date	Analyst	Prep Date	Batch
1	5030B	8260B	1	04/14/2010 0645	LBS		31466

Parameter	CAS Number	Analytical Method	Result	Q	PQL	MDL	Units	Run
Acetone	67-64-1	8260B	5.3	J	10	0.061	ug/L	1
Benzene	71-43-2	8260B	ND		0.50	0.027	ug/L	1
Bromodichloromethane	75-27-4	8260B	ND		0.50	0.17	ug/L	1
Bromoform	75-25-2	8260B	ND		0.50	0.010	ug/L	1
Bromomethane (Methyl bromide)	74-83-9	8260B	ND		0.50	0.20	ug/L	1
2-Butanone (MEK)	78-93-3	8260B	ND		10	2.0	ug/L	1
Carbon disulfide	75-15-0	8260B	0.24	J	0.50	0.097	ug/L	1
Carbon tetrachloride	56-23-5	8260B	ND		0.50	0.085	ug/L	1
Chlorobenzene	108-90-7	8260B	ND		0.50	0.17	ug/L	1
Chloroethane	75-00-3	8260B	ND		0.50	0.17	ug/L	1
Chloroform	67-66-3	8260B	ND		0.50	0.17	ug/L	1
Chloromethane (Methyl chloride)	74-87-3	8260B	0.20	J	0.50	0.17	ug/L	1
Cyclohexane	110-82-7	8260B	ND		0.50	0.30	ug/L	1
1,2-Dibromo-3-chloropropane (DBCP)	96-12-8	8260B	ND		0.50	0.069	ug/L	1
Dibromochloromethane	124-48-1	8260B	ND		0.50	0.17	ug/L	1
1,2-Dibromoethane (EDB)	106-93-4	8260B	ND		0.50	0.061	ug/L	1
1,3-Dichlorobenzene	541-73-1	8260B	ND		0.50	0.17	ug/L	1
1,2-Dichlorobenzene	95-50-1	8260B	ND		0.50	0.17	ug/L	1
1,4-Dichlorobenzene	106-46-7	8260B	ND		0.50	0.17	ug/L	1
Dichlorodifluoromethane	75-71-8	8260B	ND		0.50	0.071	ug/L	1
1,1-Dichloroethane	75-34-3	8260B	ND		0.50	0.054	ug/L	1
1,2-Dichloroethane	107-06-2	8260B	ND		0.50	0.023	ug/L	1
trans-1,2-Dichloroethene	156-60-5	8260B	0.25	J	0.50	0.079	ug/L	1
1,1-Dichloroethene	75-35-4	8260B	ND		0.50	0.094	ug/L	1
cis-1,2-Dichloroethene	156-59-2	8260B	2.8		0.50	0.087	ug/L	1
1,2-Dichloropropane	78-87-5	8260B	ND		0.50	0.081	ug/L	1
trans-1,3-Dichloropropene	10061-02-6	8260B	ND		0.50	0.18	ug/L	1
cis-1,3-Dichloropropene	10061-01-5	8260B	ND		0.50	0.090	ug/L	1
Ethylbenzene	100-41-4	8260B	ND		0.50	0.17	ug/L	1
2-Hexanone	591-78-6	8260B	ND		10	0.27	ug/L	1
Isopropylbenzene	98-82-8	8260B	ND		0.50	0.029	ug/L	1
Methyl acetate	79-20-9	8260B	ND		1.0	0.30	ug/L	1
Methyl tertiary butyl ether (MTBE)	1634-04-4	8260B	ND		0.50	0.019	ug/L	1
4-Methyl-2-pentanone	108-10-1	8260B	ND		10	0.31	ug/L	1
Methylcyclohexane	108-87-2	8260B	ND		5.0	0.95	ug/L	1
Methylene chloride	75-09-2	8260B	0.22	BJ	0.50	0.17	ug/L	1
Styrene	100-42-5	8260B	ND		0.50	0.015	ug/L	1
1,1,2,2-Tetrachloroethane	79-34-5	8260B	ND		0.50	0.013	ug/L	1
Tetrachloroethene	127-18-4	8260B	16		0.50	0.014	ug/L	1
Toluene	108-88-3	8260B	ND		0.50	0.17	ug/L	1
1,1,2-Trichloro-1,2,2-Trifluoroethane	76-13-1	8260B	ND		0.50	0.30	ug/L	1
1,2,4-Trichlorobenzene	120-82-1	8260B	ND		0.50	0.17	ug/L	1
1,1,1-Trichloroethane	71-55-6	8260B	ND		0.50	0.029	ug/L	1
1,1,2-Trichloroethane	79-00-5	8260B	ND		0.50	0.031	ug/L	1

PQL = Practical quantitation limit
B = Detected in the method blank
E = Quantitation of compound exceeded the calibration range
ND = Not detected at or above the MDL
J = Estimated result < PQL and ≥ MDL
P = The RPD between two GC columns exceeds 40%
Where applicable, all soil sample analysis are reported on a dry weight basis unless flagged with a "W"
N = Recovery is out of criteria
H = Out of holding time

Volatile Organic Compounds by GC/MS

Client: ARCADIS U.S., Inc.
Laboratory ID: LD09018-005
Description: F39TW06 (10-15)
Matrix: Aqueous
Date Sampled: 04/06/2010 1515
Date Received: 04/09/2010

Run	Prep Method	Analytical Method	Dilution	Analysis Date	Analyst	Prep Date	Batch
1	5030B	8260B	1	04/14/2010 0645	LBS		31466

Parameter	CAS Number	Analytical Method	Result	Q	PQL	MDL	Units	Run
Trichloroethene	79-01-6	8260B	38		0.50	0.024	ug/L	1
Trichlorofluoromethane	75-69-4	8260B	ND		0.50	0.051	ug/L	1
Vinyl chloride	75-01-4	8260B	ND		0.50	0.065	ug/L	1
Xylenes (total)	1330-20-7	8260B	ND		0.50	0.17	ug/L	1

Surrogate	Q	Run 1 % Recovery	Acceptance Limits
1,2-Dichloroethane-d4		108	70-130
Bromofluorobenzene		92	70-130
Toluene-d8		107	70-130

PQL = Practical quantitation limit
B = Detected in the method blank
E = Quantitation of compound exceeded the calibration range
ND = Not detected at or above the MDL
J = Estimated result < PQL and ≥ MDL
P = The RPD between two GC columns exceeds 40%
Where applicable, all soil sample analysis are reported on a dry weight basis unless flagged with a "W"
N = Recovery is out of criteria
H = Out of holding time

Semivolatile Organic Compounds by GC/MS

Client: ARCADIS U.S., Inc.
Laboratory ID: LD09018-005
Description: F39TW06 (10-15)
Matrix: Aqueous
Date Sampled: 04/06/2010 1515
Date Received: 04/09/2010

Run	Prep Method	Analytical Method	Dilution	Analysis Date	Analyst	Prep Date	Batch
1	3520C	8270D	1	04/14/2010 0130	JGH	04/11/2010 1745	31258

Parameter	CAS Number	Analytical Method	Result	Q	PQL	MDL	Units	Run
Acenaphthene	83-32-9	8270D	ND		1.0	0.092	ug/L	1
Acenaphthylene	208-96-8	8270D	ND		1.0	0.16	ug/L	1
Acetophenone	98-86-2	8270D	ND		1.0	0.33	ug/L	1
Anthracene	120-12-7	8270D	ND		1.0	0.13	ug/L	1
Atrazine	1912-24-9	8270D	ND		1.0	0.20	ug/L	1
Benzaldehyde	100-52-7	8270D	ND		5.1	1.0	ug/L	1
Benzo(a)anthracene	56-55-3	8270D	ND		1.0	0.15	ug/L	1
Benzo(a)pyrene	50-32-8	8270D	ND		1.0	0.16	ug/L	1
Benzo(b)fluoranthene	205-99-2	8270D	ND		1.0	0.20	ug/L	1
Benzo(g,h,i)perylene	191-24-2	8270D	ND		1.0	0.23	ug/L	1
Benzo(k)fluoranthene	207-08-9	8270D	ND		1.0	0.12	ug/L	1
1,1'-Biphenyl	92-52-4	8270D	ND		1.0	0.20	ug/L	1
4-Bromophenyl phenyl ether	101-55-3	8270D	ND		1.0	0.12	ug/L	1
Butyl benzyl phthalate	85-68-7	8270D	ND		5.1	1.7	ug/L	1
Caprolactam	105-60-2	8270D	ND		5.1	1.2	ug/L	1
Carbazole	86-74-8	8270D	ND		1.0	0.26	ug/L	1
4-Chloro-3-methyl phenol	59-50-7	8270D	ND		1.0	0.22	ug/L	1
4-Chloroaniline	106-47-8	8270D	ND		1.0	0.13	ug/L	1
bis(2-Chloroethoxy)methane	111-91-1	8270D	ND		1.0	0.13	ug/L	1
bis(2-Chloroethyl)ether	111-44-4	8270D	ND		1.0	0.13	ug/L	1
bis(2-Chloroisopropyl)ether	108-60-1	8270D	ND		1.0	0.082	ug/L	1
2-Chloronaphthalene	91-58-7	8270D	ND		1.0	0.12	ug/L	1
2-Chlorophenol	95-57-8	8270D	ND		1.0	0.13	ug/L	1
4-Chlorophenyl phenyl ether	7005-72-3	8270D	ND		1.0	0.11	ug/L	1
Chrysene	218-01-9	8270D	ND		1.0	0.12	ug/L	1
Dibenzo(a,h)anthracene	53-70-3	8270D	ND		1.0	0.13	ug/L	1
Dibenzofuran	132-64-9	8270D	ND		1.0	0.16	ug/L	1
3,3'-Dichlorobenzidine	91-94-1	8270D	ND		5.1	0.83	ug/L	1
2,4-Dichlorophenol	120-83-2	8270D	ND		1.0	0.15	ug/L	1
Diethylphthalate	84-66-2	8270D	ND		5.1	1.7	ug/L	1
Dimethyl phthalate	131-11-3	8270D	ND		5.1	1.7	ug/L	1
2,4-Dimethylphenol	105-67-9	8270D	ND		1.0	0.32	ug/L	1
Di-n-butyl phthalate	84-74-2	8270D	ND		5.1	1.7	ug/L	1
4,6-Dinitro-2-methylphenol	534-52-1	8270D	ND		5.1	1.5	ug/L	1
2,4-Dinitrophenol	51-28-5	8270D	ND		5.1	0.26	ug/L	1
2,4-Dinitrotoluene	121-14-2	8270D	ND		2.0	0.46	ug/L	1
2,6-Dinitrotoluene	606-20-2	8270D	ND		2.0	0.41	ug/L	1
Di-n-octylphthalate	117-84-0	8270D	ND		5.1	1.7	ug/L	1
bis(2-Ethylhexyl)phthalate	117-81-7	8270D	ND		5.1	1.7	ug/L	1
Fluoranthene	206-44-0	8270D	ND		1.0	0.21	ug/L	1
Fluorene	86-73-7	8270D	ND		1.0	0.10	ug/L	1
Hexachlorobenzene	118-74-1	8270D	ND		1.0	0.21	ug/L	1
Hexachlorobutadiene	87-68-3	8270D	ND		1.0	0.092	ug/L	1
Hexachlorocyclopentadiene	77-47-4	8270D	ND		5.1	0.23	ug/L	1

PQL = Practical quantitation limit
B = Detected in the method blank
E = Quantitation of compound exceeded the calibration range
ND = Not detected at or above the MDL
J = Estimated result < PQL and ≥ MDL
P = The RPD between two GC columns exceeds 40%
Where applicable, all soil sample analysis are reported on a dry weight basis unless flagged with a "W"
N = Recovery is out of criteria
H = Out of holding time

Semivolatile Organic Compounds by GC/MS

Client: ARCADIS U.S., Inc.
Laboratory ID: LD09018-005
Description: F39TW06 (10-15)
Matrix: Aqueous
Date Sampled: 04/06/2010 1515
Date Received: 04/09/2010

Run	Prep Method	Analytical Method	Dilution	Analysis Date	Analyst	Prep Date	Batch
1	3520C	8270D	1	04/14/2010 0130	JGH	04/11/2010 1745	31258

Parameter	CAS Number	Analytical Method	Result	Q	PQL	MDL	Units	Run
Hexachloroethane	67-72-1	8270D	ND		1.0	0.11	ug/L	1
Indeno(1,2,3-c,d)pyrene	193-39-5	8270D	ND		1.0	0.23	ug/L	1
Isophorone	78-59-1	8270D	ND		1.0	0.082	ug/L	1
2-Methylnaphthalene	91-57-6	8270D	ND		1.0	0.082	ug/L	1
2-Methylphenol	95-48-7	8270D	ND		1.0	0.17	ug/L	1
3 & 4-Methylphenol	106-44-5	8270D	ND		2.0	0.58	ug/L	1
Naphthalene	91-20-3	8270D	ND		1.0	0.071	ug/L	1
2-Nitroaniline	88-74-4	8270D	ND		2.0	0.56	ug/L	1
3-Nitroaniline	99-09-2	8270D	ND		2.0	0.79	ug/L	1
4-Nitroaniline	100-01-6	8270D	ND		2.0	0.40	ug/L	1
Nitrobenzene	98-95-3	8270D	ND		1.0	0.10	ug/L	1
2-Nitrophenol	88-75-5	8270D	ND		2.0	0.28	ug/L	1
4-Nitrophenol	100-02-7	8270D	ND		5.1	0.65	ug/L	1
N-Nitrosodi-n-propylamine	621-64-7	8270D	ND		1.0	0.082	ug/L	1
N-Nitrosodiphenylamine (Diphenylamine)	86-30-6	8270D	ND		1.0	0.39	ug/L	1
Pentachlorophenol	87-86-5	8270D	ND		5.1	0.55	ug/L	1
Phenanthrene	85-01-8	8270D	ND		1.0	0.18	ug/L	1
Phenol	108-95-2	8270D	ND		1.0	0.11	ug/L	1
Pyrene	129-00-0	8270D	ND		1.0	0.16	ug/L	1
2,4,5-Trichlorophenol	95-95-4	8270D	ND		1.0	0.18	ug/L	1
2,4,6-Trichlorophenol	88-06-2	8270D	ND		1.0	0.22	ug/L	1

Surrogate	Q	Run 1 % Recovery	Acceptance Limits
2-Fluorobiphenyl		54	37-129
2-Fluorophenol		44	24-127
Nitrobenzene-d5		52	38-127
Phenol-d5		48	28-128
Terphenyl-d14		36	10-148
2,4,6-Tribromophenol		64	41-144

PQL = Practical quantitation limit
B = Detected in the method blank
E = Quantitation of compound exceeded the calibration range
ND = Not detected at or above the MDL
J = Estimated result < PQL and ≥ MDL
P = The RPD between two GC columns exceeds 40%
Where applicable, all soil sample analysis are reported on a dry weight basis unless flagged with a "W"
N = Recovery is out of criteria
H = Out of holding time

Volatile Organic Compounds by GC/MS

Client: ARCADIS U.S., Inc.
Laboratory ID: LD09018-006
Description: F39TW06 (40-45)
Matrix: Aqueous
Date Sampled: 04/06/2010 1530
Date Received: 04/09/2010

Run	Prep Method	Analytical Method	Dilution	Analysis Date	Analyst	Prep Date	Batch
1	5030B	8260B	2	04/14/2010 1912	LBS		31526

Parameter	CAS Number	Analytical Method	Result	Q	PQL	MDL	Units	Run
Acetone	67-64-1	8260B	12	J	20	0.12	ug/L	1
Benzene	71-43-2	8260B	ND		1.0	0.054	ug/L	1
Bromodichloromethane	75-27-4	8260B	ND		1.0	0.34	ug/L	1
Bromoform	75-25-2	8260B	ND		1.0	0.020	ug/L	1
Bromomethane (Methyl bromide)	74-83-9	8260B	ND		1.0	0.41	ug/L	1
2-Butanone (MEK)	78-93-3	8260B	ND		20	4.1	ug/L	1
Carbon disulfide	75-15-0	8260B	ND		1.0	0.19	ug/L	1
Carbon tetrachloride	56-23-5	8260B	ND		1.0	0.17	ug/L	1
Chlorobenzene	108-90-7	8260B	ND		1.0	0.34	ug/L	1
Chloroethane	75-00-3	8260B	ND		1.0	0.34	ug/L	1
Chloroform	67-66-3	8260B	ND		1.0	0.34	ug/L	1
Chloromethane (Methyl chloride)	74-87-3	8260B	ND		1.0	0.35	ug/L	1
Cyclohexane	110-82-7	8260B	ND		1.0	0.60	ug/L	1
1,2-Dibromo-3-chloropropane (DBCP)	96-12-8	8260B	ND		1.0	0.14	ug/L	1
Dibromochloromethane	124-48-1	8260B	ND		1.0	0.34	ug/L	1
1,2-Dibromoethane (EDB)	106-93-4	8260B	ND		1.0	0.12	ug/L	1
1,3-Dichlorobenzene	541-73-1	8260B	ND		1.0	0.34	ug/L	1
1,2-Dichlorobenzene	95-50-1	8260B	ND		1.0	0.34	ug/L	1
1,4-Dichlorobenzene	106-46-7	8260B	ND		1.0	0.34	ug/L	1
Dichlorodifluoromethane	75-71-8	8260B	ND		1.0	0.14	ug/L	1
1,1-Dichloroethane	75-34-3	8260B	ND		1.0	0.11	ug/L	1
1,2-Dichloroethane	107-06-2	8260B	ND		1.0	0.047	ug/L	1
trans-1,2-Dichloroethene	156-60-5	8260B	ND		1.0	0.16	ug/L	1
1,1-Dichloroethene	75-35-4	8260B	ND		1.0	0.19	ug/L	1
cis-1,2-Dichloroethene	156-59-2	8260B	ND		1.0	0.17	ug/L	1
1,2-Dichloropropane	78-87-5	8260B	ND		1.0	0.16	ug/L	1
trans-1,3-Dichloropropene	10061-02-6	8260B	ND		1.0	0.36	ug/L	1
cis-1,3-Dichloropropene	10061-01-5	8260B	ND		1.0	0.18	ug/L	1
Ethylbenzene	100-41-4	8260B	ND		1.0	0.34	ug/L	1
2-Hexanone	591-78-6	8260B	ND		20	0.55	ug/L	1
Isopropylbenzene	98-82-8	8260B	ND		1.0	0.058	ug/L	1
Methyl acetate	79-20-9	8260B	ND		2.0	0.60	ug/L	1
Methyl tertiary butyl ether (MTBE)	1634-04-4	8260B	ND		1.0	0.038	ug/L	1
4-Methyl-2-pentanone	108-10-1	8260B	ND		20	0.62	ug/L	1
Methylcyclohexane	108-87-2	8260B	ND		10	1.9	ug/L	1
Methylene chloride	75-09-2	8260B	0.59	BJ	1.0	0.34	ug/L	1
Styrene	100-42-5	8260B	ND		1.0	0.030	ug/L	1
1,1,2,2-Tetrachloroethane	79-34-5	8260B	ND		1.0	0.026	ug/L	1
Tetrachloroethene	127-18-4	8260B	ND		1.0	0.029	ug/L	1
Toluene	108-88-3	8260B	ND		1.0	0.34	ug/L	1
1,1,2-Trichloro-1,2,2-Trifluoroethane	76-13-1	8260B	ND		1.0	0.60	ug/L	1
1,2,4-Trichlorobenzene	120-82-1	8260B	ND		1.0	0.34	ug/L	1
1,1,1-Trichloroethane	71-55-6	8260B	ND		1.0	0.058	ug/L	1
1,1,2-Trichloroethane	79-00-5	8260B	ND		1.0	0.062	ug/L	1

PQL = Practical quantitation limit
B = Detected in the method blank
E = Quantitation of compound exceeded the calibration range
ND = Not detected at or above the MDL
J = Estimated result < PQL and ≥ MDL
P = The RPD between two GC columns exceeds 40%
Where applicable, all soil sample analysis are reported on a dry weight basis unless flagged with a "W"
N = Recovery is out of criteria
H = Out of holding time

Volatile Organic Compounds by GC/MS

Client: ARCADIS U.S., Inc.
Laboratory ID: LD09018-006
Description: F39TW06 (40-45)
Matrix: Aqueous
Date Sampled: 04/06/2010 1530
Date Received: 04/09/2010

Run	Prep Method	Analytical Method	Dilution	Analysis Date	Analyst	Prep Date	Batch
1	5030B	8260B	2	04/14/2010 1912	LBS		31526

Parameter	CAS Number	Analytical Method	Result	Q	PQL	MDL	Units	Run
Trichloroethene	79-01-6	8260B	ND		1.0	0.049	ug/L	1
Trichlorofluoromethane	75-69-4	8260B	ND		1.0	0.10	ug/L	1
Vinyl chloride	75-01-4	8260B	ND		1.0	0.13	ug/L	1
Xylenes (total)	1330-20-7	8260B	ND		1.0	0.34	ug/L	1

Surrogate	Q	Run 1 % Recovery	Acceptance Limits
1,2-Dichloroethane-d4		100	70-130
Bromofluorobenzene		94	70-130
Toluene-d8		104	70-130

PQL = Practical quantitation limit
B = Detected in the method blank
E = Quantitation of compound exceeded the calibration range
ND = Not detected at or above the MDL
J = Estimated result < PQL and ≥ MDL
P = The RPD between two GC columns exceeds 40%
Where applicable, all soil sample analysis are reported on a dry weight basis unless flagged with a "W"
N = Recovery is out of criteria
H = Out of holding time

Semivolatile Organic Compounds by GC/MS

Client: ARCADIS U.S., Inc.
Laboratory ID: LD09018-006
Description: F39TW06 (40-45)
Matrix: Aqueous
Date Sampled: 04/06/2010 1530
Date Received: 04/09/2010

Run	Prep Method	Analytical Method	Dilution	Analysis Date	Analyst	Prep Date	Batch
1	3520C	8270D	1	04/16/2010 1418	JGH	04/11/2010 1745	31258
2	3520C	8270D	1	04/22/2010 1800	WD	04/18/2010 1330	31716

Parameter	CAS Number	Analytical Method	Result	Q	PQL	MDL	Units	Run
Acenaphthene	83-32-9	8270D	ND		1.0	0.093	ug/L	1
Acenaphthylene	208-96-8	8270D	ND		1.0	0.16	ug/L	1
Acetophenone	98-86-2	8270D	ND		1.0	0.33	ug/L	1
Anthracene	120-12-7	8270D	ND		1.0	0.13	ug/L	1
Atrazine	1912-24-9	8270D	ND		1.0	0.21	ug/L	1
Benzaldehyde	100-52-7	8270D	ND		5.2	1.0	ug/L	1
Benzo(a)anthracene	56-55-3	8270D	ND		1.0	0.15	ug/L	1
Benzo(a)pyrene	50-32-8	8270D	ND		1.0	0.16	ug/L	1
Benzo(b)fluoranthene	205-99-2	8270D	ND		1.0	0.21	ug/L	1
Benzo(g,h,i)perylene	191-24-2	8270D	ND		1.0	0.24	ug/L	1
Benzo(k)fluoranthene	207-08-9	8270D	ND		1.0	0.12	ug/L	1
1,1'-Biphenyl	92-52-4	8270D	ND		1.0	0.21	ug/L	1
4-Bromophenyl phenyl ether	101-55-3	8270D	ND		1.0	0.12	ug/L	1
Butyl benzyl phthalate	85-68-7	8270D	ND		5.2	1.8	ug/L	1
Caprolactam	105-60-2	8270D	ND		5.2	1.2	ug/L	1
Carbazole	86-74-8	8270D	ND		1.0	0.26	ug/L	1
4-Chloro-3-methyl phenol	59-50-7	8270D	ND		1.0	0.23	ug/L	1
4-Chloroaniline	106-47-8	8270D	ND		1.0	0.13	ug/L	1
bis(2-Chloroethoxy)methane	111-91-1	8270D	ND		1.0	0.13	ug/L	1
bis(2-Chloroethyl)ether	111-44-4	8270D	ND		1.0	0.13	ug/L	1
bis(2-Chloroisopropyl)ether	108-60-1	8270D	ND		1.0	0.082	ug/L	1
2-Chloronaphthalene	91-58-7	8270D	ND		1.0	0.12	ug/L	1
2-Chlorophenol	95-57-8	8270D	ND		1.0	0.13	ug/L	1
4-Chlorophenyl phenyl ether	7005-72-3	8270D	ND		1.0	0.11	ug/L	1
Chrysene	218-01-9	8270D	ND		1.0	0.12	ug/L	1
Dibenzo(a,h)anthracene	53-70-3	8270D	ND		1.0	0.13	ug/L	1
Dibenzofuran	132-64-9	8270D	ND		1.0	0.16	ug/L	1
3,3'-Dichlorobenzidine	91-94-1	8270D	ND		5.2	0.84	ug/L	1
2,4-Dichlorophenol	120-83-2	8270D	ND		1.0	0.15	ug/L	1
Diethylphthalate	84-66-2	8270D	ND		5.2	1.8	ug/L	1
Dimethyl phthalate	131-11-3	8270D	ND		5.2	1.8	ug/L	1
2,4-Dimethylphenol	105-67-9	8270D	ND		1.0	0.32	ug/L	1
Di-n-butyl phthalate	84-74-2	8270D	ND		5.2	1.8	ug/L	1
4,6-Dinitro-2-methylphenol	534-52-1	8270D	ND		5.2	1.5	ug/L	1
2,4-Dinitrophenol	51-28-5	8270D	ND		5.2	0.26	ug/L	1
2,4-Dinitrotoluene	121-14-2	8270D	ND		2.1	0.46	ug/L	1
2,6-Dinitrotoluene	606-20-2	8270D	ND		2.1	0.41	ug/L	1
Di-n-octylphthalate	117-84-0	8270D	ND		5.2	1.8	ug/L	1
bis(2-Ethylhexyl)phthalate	117-81-7	8270D	ND		5.2	1.8	ug/L	1
Fluoranthene	206-44-0	8270D	ND		1.0	0.22	ug/L	1
Fluorene	86-73-7	8270D	ND		1.0	0.10	ug/L	1
Hexachlorobenzene	118-74-1	8270D	ND		1.0	0.22	ug/L	1
Hexachlorobutadiene	87-68-3	8270D	ND		1.0	0.093	ug/L	1

PQL = Practical quantitation limit
B = Detected in the method blank
E = Quantitation of compound exceeded the calibration range
ND = Not detected at or above the MDL
J = Estimated result < PQL and ≥ MDL
P = The RPD between two GC columns exceeds 40%
Where applicable, all soil sample analysis are reported on a dry weight basis unless flagged with a "W"
N = Recovery is out of criteria
H = Out of holding time

Semivolatile Organic Compounds by GC/MS

Client: ARCADIS U.S., Inc.
Laboratory ID: LD09018-006
Description: F39TW06 (40-45)
Matrix: Aqueous
Date Sampled: 04/06/2010 1530
Date Received: 04/09/2010

Run	Prep Method	Analytical Method	Dilution	Analysis Date	Analyst	Prep Date	Batch
1	3520C	8270D	1	04/16/2010 1418	JGH	04/11/2010 1745	31258
2	3520C	8270D	1	04/22/2010 1800	WD	04/18/2010 1330	31716

Parameter	CAS Number	Analytical Method	Result	Q	PQL	MDL	Units	Run
Hexachlorocyclopentadiene	77-47-4	8270D	ND		5.2	0.24	ug/L	1
Hexachloroethane	67-72-1	8270D	ND		1.0	0.11	ug/L	1
Indeno(1,2,3-c,d)pyrene	193-39-5	8270D	ND		1.0	0.24	ug/L	1
Isophorone	78-59-1	8270D	ND		1.0	0.082	ug/L	1
2-Methylnaphthalene	91-57-6	8270D	ND		1.0	0.082	ug/L	1
2-Methylphenol	95-48-7	8270D	ND		1.0	0.18	ug/L	1
3 & 4-Methylphenol	106-44-5	8270D	ND		2.1	0.59	ug/L	1
Naphthalene	91-20-3	8270D	ND		1.0	0.072	ug/L	1
2-Nitroaniline	88-74-4	8270D	ND		2.1	0.57	ug/L	1
3-Nitroaniline	99-09-2	8270D	ND		2.1	0.79	ug/L	1
4-Nitroaniline	100-01-6	8270D	ND		2.1	0.40	ug/L	1
Nitrobenzene	98-95-3	8270D	ND		1.0	0.10	ug/L	1
2-Nitrophenol	88-75-5	8270D	ND		2.1	0.28	ug/L	1
4-Nitrophenol	100-02-7	8270D	ND		5.2	0.66	ug/L	1
N-Nitrosodi-n-propylamine	621-64-7	8270D	ND		1.0	0.082	ug/L	1
N-Nitrosodiphenylamine (Diphenylamine)	86-30-6	8270D	ND		1.0	0.39	ug/L	1
Pentachlorophenol	87-86-5	8270D	ND		5.2	0.56	ug/L	1
Phenanthrene	85-01-8	8270D	ND		1.0	0.19	ug/L	1
Phenol	108-95-2	8270D	ND		1.0	0.11	ug/L	1
Pyrene	129-00-0	8270D	ND		1.0	0.16	ug/L	1
2,4,5-Trichlorophenol	95-95-4	8270D	ND		1.0	0.19	ug/L	1
2,4,6-Trichlorophenol	88-06-2	8270D	ND		1.0	0.23	ug/L	1

Surrogate	Q	Run 1 % Recovery	Acceptance Limits	Q	Run 2 % Recovery	Acceptance Limits
2-Fluorobiphenyl	N	19	37-129	H	56	37-129
2-Fluorophenol		30	24-127	H	43	24-127
Nitrobenzene-d5	N	9.1	38-127	H	49	38-127
Phenol-d5		38	28-128	H	54	28-128
Terphenyl-d14	N	0.030	10-148	H	18	10-148
2,4,6-Tribromophenol	N	27	41-144	H	69	41-144

PQL = Practical quantitation limit
B = Detected in the method blank
E = Quantitation of compound exceeded the calibration range
ND = Not detected at or above the MDL
J = Estimated result < PQL and ≥ MDL
P = The RPD between two GC columns exceeds 40%
Where applicable, all soil sample analysis are reported on a dry weight basis unless flagged with a "W"
N = Recovery is out of criteria
H = Out of holding time

Semivolatile Organic Compounds by GC/MS

Client: ARCADIS U.S., Inc.
Laboratory ID: LD09018-006
Description: F39TW06 (40-45)
Matrix: Aqueous
Date Sampled: 04/06/2010 1530
Date Received: 04/09/2010

Run	Prep Method	Analytical Method	Dilution	Analysis Date	Analyst	Prep Date	Batch
1	3520C	8270D	1	04/16/2010 1418	JGH	04/11/2010 1745	31258
2	3520C	8270D	1	04/22/2010 1800	WD	04/18/2010 1330	31716

Parameter	CAS Number	Analytical Method	Result	Q	PQL	MDL	Units	Run
Acenaphthene	83-32-9	8270D	ND	H	10	0.90	ug/L	2
Acenaphthylene	208-96-8	8270D	ND	H	10	1.6	ug/L	2
Acetophenone	98-86-2	8270D	ND	H	10	3.2	ug/L	2
Anthracene	120-12-7	8270D	ND	H	10	1.3	ug/L	2
Atrazine	1912-24-9	8270D	ND	H	10	2.0	ug/L	2
Benzaldehyde	100-52-7	8270D	ND	H	50	10	ug/L	2
Benzo(a)anthracene	56-55-3	8270D	ND	H	10	1.5	ug/L	2
Benzo(a)pyrene	50-32-8	8270D	ND	H	10	1.6	ug/L	2
Benzo(b)fluoranthene	205-99-2	8270D	ND	H	10	2.0	ug/L	2
Benzo(g,h,i)perylene	191-24-2	8270D	ND	H	10	2.3	ug/L	2
Benzo(k)fluoranthene	207-08-9	8270D	ND	H	10	1.2	ug/L	2
1,1'-Biphenyl	92-52-4	8270D	ND	H	10	2.0	ug/L	2
4-Bromophenyl phenyl ether	101-55-3	8270D	ND	H	10	1.2	ug/L	2
Butyl benzyl phthalate	85-68-7	8270D	ND	H	50	17	ug/L	2
Caprolactam	105-60-2	8270D	ND	H	50	12	ug/L	2
Carbazole	86-74-8	8270D	ND	H	10	2.5	ug/L	2
4-Chloro-3-methyl phenol	59-50-7	8270D	ND	H	10	2.2	ug/L	2
4-Chloroaniline	106-47-8	8270D	ND	H	10	1.3	ug/L	2
bis(2-Chloroethoxy)methane	111-91-1	8270D	ND	H	10	1.3	ug/L	2
bis(2-Chloroethyl)ether	111-44-4	8270D	ND	H	10	1.3	ug/L	2
bis(2-Chloroisopropyl)ether	108-60-1	8270D	ND	H	10	0.80	ug/L	2
2-Chloronaphthalene	91-58-7	8270D	ND	H	10	1.2	ug/L	2
2-Chlorophenol	95-57-8	8270D	ND	H	10	1.3	ug/L	2
4-Chlorophenyl phenyl ether	7005-72-3	8270D	ND	H	10	1.1	ug/L	2
Chrysene	218-01-9	8270D	ND	H	10	1.2	ug/L	2
Dibenzo(a,h)anthracene	53-70-3	8270D	ND	H	10	1.3	ug/L	2
Dibenzofuran	132-64-9	8270D	ND	H	10	1.6	ug/L	2
3,3'-Dichlorobenzidine	91-94-1	8270D	ND	H	50	8.1	ug/L	2
2,4-Dichlorophenol	120-83-2	8270D	ND	H	10	1.5	ug/L	2
Diethylphthalate	84-66-2	8270D	ND	H	50	17	ug/L	2
Dimethyl phthalate	131-11-3	8270D	ND	H	50	17	ug/L	2
2,4-Dimethylphenol	105-67-9	8270D	ND	H	10	3.1	ug/L	2
Di-n-butyl phthalate	84-74-2	8270D	ND	H	50	17	ug/L	2
4,6-Dinitro-2-methylphenol	534-52-1	8270D	ND	H	50	15	ug/L	2
2,4-Dinitrophenol	51-28-5	8270D	ND	H	50	2.5	ug/L	2
2,4-Dinitrotoluene	121-14-2	8270D	ND	H	20	4.5	ug/L	2
2,6-Dinitrotoluene	606-20-2	8270D	ND	H	20	4.0	ug/L	2
Di-n-octylphthalate	117-84-0	8270D	ND	H	50	17	ug/L	2
bis(2-Ethylhexyl)phthalate	117-81-7	8270D	ND	H	50	17	ug/L	2
Fluoranthene	206-44-0	8270D	ND	H	10	2.1	ug/L	2
Fluorene	86-73-7	8270D	ND	H	10	1.0	ug/L	2
Hexachlorobenzene	118-74-1	8270D	ND	H	10	2.1	ug/L	2
Hexachlorobutadiene	87-68-3	8270D	ND	H	10	0.90	ug/L	2

PQL = Practical quantitation limit
B = Detected in the method blank
E = Quantitation of compound exceeded the calibration range
ND = Not detected at or above the MDL
J = Estimated result < PQL and ≥ MDL
P = The RPD between two GC columns exceeds 40%
Where applicable, all soil sample analysis are reported on a dry weight basis unless flagged with a "W"
N = Recovery is out of criteria
H = Out of holding time

Semivolatile Organic Compounds by GC/MS

Client: ARCADIS U.S., Inc.
Laboratory ID: LD09018-006
Description: F39TW06 (40-45)
Matrix: Aqueous
Date Sampled: 04/06/2010 1530
Date Received: 04/09/2010

Run	Prep Method	Analytical Method	Dilution	Analysis Date	Analyst	Prep Date	Batch
1	3520C	8270D	1	04/16/2010 1418	JGH	04/11/2010 1745	31258
2	3520C	8270D	1	04/22/2010 1800	WD	04/18/2010 1330	31716

Parameter	CAS Number	Analytical Method	Result	Q	PQL	MDL	Units	Run
Hexachlorocyclopentadiene	77-47-4	8270D	ND	H	50	2.3	ug/L	2
Hexachloroethane	67-72-1	8270D	ND	H	10	1.1	ug/L	2
Indeno(1,2,3-c,d)pyrene	193-39-5	8270D	ND	H	10	2.3	ug/L	2
Isophorone	78-59-1	8270D	ND	H	10	0.80	ug/L	2
2-Methylnaphthalene	91-57-6	8270D	ND	H	10	0.80	ug/L	2
2-Methylphenol	95-48-7	8270D	ND	H	10	1.7	ug/L	2
3 & 4-Methylphenol	106-44-5	8270D	ND	H	20	5.7	ug/L	2
Naphthalene	91-20-3	8270D	ND	H	10	0.70	ug/L	2
2-Nitroaniline	88-74-4	8270D	ND	H	20	5.5	ug/L	2
3-Nitroaniline	99-09-2	8270D	ND	H	20	7.7	ug/L	2
4-Nitroaniline	100-01-6	8270D	ND	H	20	3.9	ug/L	2
Nitrobenzene	98-95-3	8270D	ND	H	10	1.0	ug/L	2
2-Nitrophenol	88-75-5	8270D	ND	H	20	2.7	ug/L	2
4-Nitrophenol	100-02-7	8270D	ND	H	50	6.4	ug/L	2
N-Nitrosodi-n-propylamine	621-64-7	8270D	ND	H	10	0.80	ug/L	2
N-Nitrosodiphenylamine (Diphenylamine)	86-30-6	8270D	ND	H	10	3.8	ug/L	2
Pentachlorophenol	87-86-5	8270D	ND	H	50	5.4	ug/L	2
Phenanthrene	85-01-8	8270D	ND	H	10	1.8	ug/L	2
Phenol	108-95-2	8270D	ND	H	10	1.1	ug/L	2
Pyrene	129-00-0	8270D	ND	H	10	1.6	ug/L	2
2,4,5-Trichlorophenol	95-95-4	8270D	ND	H	10	1.8	ug/L	2
2,4,6-Trichlorophenol	88-06-2	8270D	ND	H	10	2.2	ug/L	2

Surrogate	Q	Run 1 % Recovery	Acceptance Limits	Q	Run 2 % Recovery	Acceptance Limits
2-Fluorobiphenyl	N	19	37-129	H	56	37-129
2-Fluorophenol		30	24-127	H	43	24-127
Nitrobenzene-d5	N	9.1	38-127	H	49	38-127
Phenol-d5		38	28-128	H	54	28-128
Terphenyl-d14	N	0.030	10-148	H	18	10-148
2,4,6-Tribromophenol	N	27	41-144	H	69	41-144

PQL = Practical quantitation limit
B = Detected in the method blank
E = Quantitation of compound exceeded the calibration range
ND = Not detected at or above the MDL
J = Estimated result < PQL and ≥ MDL
P = The RPD between two GC columns exceeds 40%
Where applicable, all soil sample analysis are reported on a dry weight basis unless flagged with a "W"
N = Recovery is out of criteria
H = Out of holding time

Volatile Organic Compounds by GC/MS

Client: ARCADIS U.S., Inc.
Laboratory ID: LD09018-007
Description: F39TW06 (20-25)
Matrix: Aqueous
Date Sampled: 04/07/2010 0810
Date Received: 04/09/2010

Run	Prep Method	Analytical Method	Dilution	Analysis Date	Analyst	Prep Date	Batch
1	5030B	8260B	1	04/14/2010 0706	LBS		31466

Parameter	CAS Number	Analytical Method	Result	Q	PQL	MDL	Units	Run
Acetone	67-64-1	8260B	18		10	0.061	ug/L	1
Benzene	71-43-2	8260B	0.95		0.50	0.027	ug/L	1
Bromodichloromethane	75-27-4	8260B	ND		0.50	0.17	ug/L	1
Bromoform	75-25-2	8260B	ND		0.50	0.010	ug/L	1
Bromomethane (Methyl bromide)	74-83-9	8260B	ND		0.50	0.20	ug/L	1
2-Butanone (MEK)	78-93-3	8260B	3.1	J	10	2.0	ug/L	1
Carbon disulfide	75-15-0	8260B	ND		0.50	0.097	ug/L	1
Carbon tetrachloride	56-23-5	8260B	ND		0.50	0.085	ug/L	1
Chlorobenzene	108-90-7	8260B	ND		0.50	0.17	ug/L	1
Chloroethane	75-00-3	8260B	ND		0.50	0.17	ug/L	1
Chloroform	67-66-3	8260B	ND		0.50	0.17	ug/L	1
Chloromethane (Methyl chloride)	74-87-3	8260B	0.39	J	0.50	0.17	ug/L	1
Cyclohexane	110-82-7	8260B	0.72		0.50	0.30	ug/L	1
1,2-Dibromo-3-chloropropane (DBCP)	96-12-8	8260B	ND		0.50	0.069	ug/L	1
Dibromochloromethane	124-48-1	8260B	ND		0.50	0.17	ug/L	1
1,2-Dibromoethane (EDB)	106-93-4	8260B	ND		0.50	0.061	ug/L	1
1,3-Dichlorobenzene	541-73-1	8260B	ND		0.50	0.17	ug/L	1
1,2-Dichlorobenzene	95-50-1	8260B	ND		0.50	0.17	ug/L	1
1,4-Dichlorobenzene	106-46-7	8260B	ND		0.50	0.17	ug/L	1
Dichlorodifluoromethane	75-71-8	8260B	ND		0.50	0.071	ug/L	1
1,1-Dichloroethane	75-34-3	8260B	ND		0.50	0.054	ug/L	1
1,2-Dichloroethane	107-06-2	8260B	ND		0.50	0.023	ug/L	1
trans-1,2-Dichloroethene	156-60-5	8260B	ND		0.50	0.079	ug/L	1
1,1-Dichloroethene	75-35-4	8260B	ND		0.50	0.094	ug/L	1
cis-1,2-Dichloroethene	156-59-2	8260B	0.70		0.50	0.087	ug/L	1
1,2-Dichloropropane	78-87-5	8260B	ND		0.50	0.081	ug/L	1
trans-1,3-Dichloropropene	10061-02-6	8260B	ND		0.50	0.18	ug/L	1
cis-1,3-Dichloropropene	10061-01-5	8260B	ND		0.50	0.090	ug/L	1
Ethylbenzene	100-41-4	8260B	0.22	J	0.50	0.17	ug/L	1
2-Hexanone	591-78-6	8260B	0.34	J	10	0.27	ug/L	1
Isopropylbenzene	98-82-8	8260B	ND		0.50	0.029	ug/L	1
Methyl acetate	79-20-9	8260B	ND		1.0	0.30	ug/L	1
Methyl tertiary butyl ether (MTBE)	1634-04-4	8260B	ND		0.50	0.019	ug/L	1
4-Methyl-2-pentanone	108-10-1	8260B	ND		10	0.31	ug/L	1
Methylcyclohexane	108-87-2	8260B	ND		5.0	0.95	ug/L	1
Methylene chloride	75-09-2	8260B	0.37	BJ	0.50	0.17	ug/L	1
Styrene	100-42-5	8260B	ND		0.50	0.015	ug/L	1
1,1,2,2-Tetrachloroethane	79-34-5	8260B	ND		0.50	0.013	ug/L	1
Tetrachloroethene	127-18-4	8260B	ND		0.50	0.014	ug/L	1
Toluene	108-88-3	8260B	1.1		0.50	0.17	ug/L	1
1,1,2-Trichloro-1,2,2-Trifluoroethane	76-13-1	8260B	ND		0.50	0.30	ug/L	1
1,2,4-Trichlorobenzene	120-82-1	8260B	ND		0.50	0.17	ug/L	1
1,1,1-Trichloroethane	71-55-6	8260B	ND		0.50	0.029	ug/L	1
1,1,2-Trichloroethane	79-00-5	8260B	ND		0.50	0.031	ug/L	1

PQL = Practical quantitation limit
B = Detected in the method blank
E = Quantitation of compound exceeded the calibration range
ND = Not detected at or above the MDL
J = Estimated result < PQL and ≥ MDL
P = The RPD between two GC columns exceeds 40%
Where applicable, all soil sample analysis are reported on a dry weight basis unless flagged with a "W"
N = Recovery is out of criteria
H = Out of holding time

Volatile Organic Compounds by GC/MS

Client: ARCADIS U.S., Inc.
Laboratory ID: LD09018-007
Description: F39TW06 (20-25)
Matrix: Aqueous
Date Sampled: 04/07/2010 0810
Date Received: 04/09/2010

Run	Prep Method	Analytical Method	Dilution	Analysis Date	Analyst	Prep Date	Batch
1	5030B	8260B	1	04/14/2010 0706	LBS		31466

Parameter	CAS Number	Analytical Method	Result	Q	PQL	MDL	Units	Run
Trichloroethene	79-01-6	8260B	4.0		0.50	0.024	ug/L	1
Trichlorofluoromethane	75-69-4	8260B	ND		0.50	0.051	ug/L	1
Vinyl chloride	75-01-4	8260B	ND		0.50	0.065	ug/L	1
Xylenes (total)	1330-20-7	8260B	0.30	J	0.50	0.17	ug/L	1

Surrogate	Q	Run 1 % Recovery	Acceptance Limits
1,2-Dichloroethane-d4		107	70-130
Bromofluorobenzene		94	70-130
Toluene-d8		107	70-130

PQL = Practical quantitation limit
B = Detected in the method blank
E = Quantitation of compound exceeded the calibration range
ND = Not detected at or above the MDL
J = Estimated result < PQL and ≥ MDL
P = The RPD between two GC columns exceeds 40%
Where applicable, all soil sample analysis are reported on a dry weight basis unless flagged with a "W"
N = Recovery is out of criteria
H = Out of holding time

Semivolatile Organic Compounds by GC/MS

Client: ARCADIS U.S., Inc.
Laboratory ID: LD09018-007
Description: F39TW06 (20-25)
Matrix: Aqueous
Date Sampled: 04/07/2010 0810
Date Received: 04/09/2010

Run	Prep Method	Analytical Method	Dilution	Analysis Date	Analyst	Prep Date	Batch
1	3520C	8270D	1	04/14/2010 0208	JGH	04/11/2010 1745	31258

Parameter	CAS Number	Analytical Method	Result	Q	PQL	MDL	Units	Run
Acenaphthene	83-32-9	8270D	ND		1.0	0.091	ug/L	1
Acenaphthylene	208-96-8	8270D	ND		1.0	0.16	ug/L	1
Acetophenone	98-86-2	8270D	ND		1.0	0.32	ug/L	1
Anthracene	120-12-7	8270D	ND		1.0	0.13	ug/L	1
Atrazine	1912-24-9	8270D	ND		1.0	0.20	ug/L	1
Benzaldehyde	100-52-7	8270D	ND		5.1	1.0	ug/L	1
Benzo(a)anthracene	56-55-3	8270D	ND		1.0	0.15	ug/L	1
Benzo(a)pyrene	50-32-8	8270D	ND		1.0	0.16	ug/L	1
Benzo(b)fluoranthene	205-99-2	8270D	ND		1.0	0.20	ug/L	1
Benzo(g,h,i)perylene	191-24-2	8270D	ND		1.0	0.23	ug/L	1
Benzo(k)fluoranthene	207-08-9	8270D	ND		1.0	0.12	ug/L	1
1,1'-Biphenyl	92-52-4	8270D	ND		1.0	0.20	ug/L	1
4-Bromophenyl phenyl ether	101-55-3	8270D	ND		1.0	0.12	ug/L	1
Butyl benzyl phthalate	85-68-7	8270D	ND		5.1	1.7	ug/L	1
Caprolactam	105-60-2	8270D	ND		5.1	1.2	ug/L	1
Carbazole	86-74-8	8270D	ND		1.0	0.25	ug/L	1
4-Chloro-3-methyl phenol	59-50-7	8270D	ND		1.0	0.22	ug/L	1
4-Chloroaniline	106-47-8	8270D	ND		1.0	0.13	ug/L	1
bis(2-Chloroethoxy)methane	111-91-1	8270D	ND		1.0	0.13	ug/L	1
bis(2-Chloroethyl)ether	111-44-4	8270D	ND		1.0	0.13	ug/L	1
bis(2-Chloroisopropyl)ether	108-60-1	8270D	ND		1.0	0.081	ug/L	1
2-Chloronaphthalene	91-58-7	8270D	ND		1.0	0.12	ug/L	1
2-Chlorophenol	95-57-8	8270D	ND		1.0	0.13	ug/L	1
4-Chlorophenyl phenyl ether	7005-72-3	8270D	ND		1.0	0.11	ug/L	1
Chrysene	218-01-9	8270D	ND		1.0	0.12	ug/L	1
Dibenzo(a,h)anthracene	53-70-3	8270D	ND		1.0	0.13	ug/L	1
Dibenzofuran	132-64-9	8270D	ND		1.0	0.16	ug/L	1
3,3'-Dichlorobenzidine	91-94-1	8270D	ND		5.1	0.82	ug/L	1
2,4-Dichlorophenol	120-83-2	8270D	ND		1.0	0.15	ug/L	1
Diethylphthalate	84-66-2	8270D	ND		5.1	1.7	ug/L	1
Dimethyl phthalate	131-11-3	8270D	ND		5.1	1.7	ug/L	1
2,4-Dimethylphenol	105-67-9	8270D	ND		1.0	0.31	ug/L	1
Di-n-butyl phthalate	84-74-2	8270D	ND		5.1	1.7	ug/L	1
4,6-Dinitro-2-methylphenol	534-52-1	8270D	ND		5.1	1.5	ug/L	1
2,4-Dinitrophenol	51-28-5	8270D	ND		5.1	0.25	ug/L	1
2,4-Dinitrotoluene	121-14-2	8270D	ND		2.0	0.45	ug/L	1
2,6-Dinitrotoluene	606-20-2	8270D	ND		2.0	0.40	ug/L	1
Di-n-octylphthalate	117-84-0	8270D	ND		5.1	1.7	ug/L	1
bis(2-Ethylhexyl)phthalate	117-81-7	8270D	ND		5.1	1.7	ug/L	1
Fluoranthene	206-44-0	8270D	ND		1.0	0.21	ug/L	1
Fluorene	86-73-7	8270D	ND		1.0	0.10	ug/L	1
Hexachlorobenzene	118-74-1	8270D	ND		1.0	0.21	ug/L	1
Hexachlorobutadiene	87-68-3	8270D	ND		1.0	0.091	ug/L	1
Hexachlorocyclopentadiene	77-47-4	8270D	ND		5.1	0.23	ug/L	1

PQL = Practical quantitation limit
B = Detected in the method blank
E = Quantitation of compound exceeded the calibration range
ND = Not detected at or above the MDL
J = Estimated result < PQL and ≥ MDL
P = The RPD between two GC columns exceeds 40%
Where applicable, all soil sample analysis are reported on a dry weight basis unless flagged with a "W"
N = Recovery is out of criteria
H = Out of holding time

Semivolatile Organic Compounds by GC/MS

Client: ARCADIS U.S., Inc.
Laboratory ID: LD09018-007
Description: F39TW06 (20-25)
Matrix: Aqueous
Date Sampled: 04/07/2010 0810
Date Received: 04/09/2010

Run	Prep Method	Analytical Method	Dilution	Analysis Date	Analyst	Prep Date	Batch
1	3520C	8270D	1	04/14/2010 0208	JGH	04/11/2010 1745	31258

Parameter	CAS Number	Analytical Method	Result	Q	PQL	MDL	Units	Run
Hexachloroethane	67-72-1	8270D	ND		1.0	0.11	ug/L	1
Indeno(1,2,3-c,d)pyrene	193-39-5	8270D	ND		1.0	0.23	ug/L	1
Isophorone	78-59-1	8270D	ND		1.0	0.081	ug/L	1
2-Methylnaphthalene	91-57-6	8270D	ND		1.0	0.081	ug/L	1
2-Methylphenol	95-48-7	8270D	ND		1.0	0.17	ug/L	1
3 & 4-Methylphenol	106-44-5	8270D	ND		2.0	0.58	ug/L	1
Naphthalene	91-20-3	8270D	ND		1.0	0.071	ug/L	1
2-Nitroaniline	88-74-4	8270D	ND		2.0	0.56	ug/L	1
3-Nitroaniline	99-09-2	8270D	ND		2.0	0.78	ug/L	1
4-Nitroaniline	100-01-6	8270D	ND		2.0	0.39	ug/L	1
Nitrobenzene	98-95-3	8270D	ND		1.0	0.10	ug/L	1
2-Nitrophenol	88-75-5	8270D	ND		2.0	0.27	ug/L	1
4-Nitrophenol	100-02-7	8270D	ND		5.1	0.65	ug/L	1
N-Nitrosodi-n-propylamine	621-64-7	8270D	ND		1.0	0.081	ug/L	1
N-Nitrosodiphenylamine (Diphenylamine)	86-30-6	8270D	ND		1.0	0.38	ug/L	1
Pentachlorophenol	87-86-5	8270D	ND		5.1	0.55	ug/L	1
Phenanthrene	85-01-8	8270D	ND		1.0	0.18	ug/L	1
Phenol	108-95-2	8270D	ND		1.0	0.11	ug/L	1
Pyrene	129-00-0	8270D	ND		1.0	0.16	ug/L	1
2,4,5-Trichlorophenol	95-95-4	8270D	ND		1.0	0.18	ug/L	1
2,4,6-Trichlorophenol	88-06-2	8270D	ND		1.0	0.22	ug/L	1

Surrogate	Q	Run 1 % Recovery	Acceptance Limits
2-Fluorobiphenyl		56	37-129
2-Fluorophenol		45	24-127
Nitrobenzene-d5		54	38-127
Phenol-d5		52	28-128
Terphenyl-d14		28	10-148
2,4,6-Tribromophenol		75	41-144

PQL = Practical quantitation limit
B = Detected in the method blank
E = Quantitation of compound exceeded the calibration range
ND = Not detected at or above the MDL
J = Estimated result < PQL and ≥ MDL
P = The RPD between two GC columns exceeds 40%
Where applicable, all soil sample analysis are reported on a dry weight basis unless flagged with a "W"
N = Recovery is out of criteria
H = Out of holding time

Volatile Organic Compounds by GC/MS

Client: ARCADIS U.S., Inc.
Laboratory ID: LD09018-008
Description: F39TW06 (30-35)
Matrix: Aqueous
Date Sampled: 04/07/2010 0830
Date Received: 04/09/2010

Run	Prep Method	Analytical Method	Dilution	Analysis Date	Analyst	Prep Date	Batch
1	5030B	8260B	1	04/14/2010 0728	LBS		31466

Parameter	CAS Number	Analytical Method	Result	Q	PQL	MDL	Units	Run
Acetone	67-64-1	8260B	6.1	J	10	0.061	ug/L	1
Benzene	71-43-2	8260B	0.25	J	0.50	0.027	ug/L	1
Bromodichloromethane	75-27-4	8260B	ND		0.50	0.17	ug/L	1
Bromoform	75-25-2	8260B	ND		0.50	0.010	ug/L	1
Bromomethane (Methyl bromide)	74-83-9	8260B	ND		0.50	0.20	ug/L	1
2-Butanone (MEK)	78-93-3	8260B	ND		10	2.0	ug/L	1
Carbon disulfide	75-15-0	8260B	0.40	J	0.50	0.097	ug/L	1
Carbon tetrachloride	56-23-5	8260B	ND		0.50	0.085	ug/L	1
Chlorobenzene	108-90-7	8260B	ND		0.50	0.17	ug/L	1
Chloroethane	75-00-3	8260B	ND		0.50	0.17	ug/L	1
Chloroform	67-66-3	8260B	ND		0.50	0.17	ug/L	1
Chloromethane (Methyl chloride)	74-87-3	8260B	ND		0.50	0.17	ug/L	1
Cyclohexane	110-82-7	8260B	ND		0.50	0.30	ug/L	1
1,2-Dibromo-3-chloropropane (DBCP)	96-12-8	8260B	ND		0.50	0.069	ug/L	1
Dibromochloromethane	124-48-1	8260B	ND		0.50	0.17	ug/L	1
1,2-Dibromoethane (EDB)	106-93-4	8260B	ND		0.50	0.061	ug/L	1
1,3-Dichlorobenzene	541-73-1	8260B	ND		0.50	0.17	ug/L	1
1,2-Dichlorobenzene	95-50-1	8260B	ND		0.50	0.17	ug/L	1
1,4-Dichlorobenzene	106-46-7	8260B	ND		0.50	0.17	ug/L	1
Dichlorodifluoromethane	75-71-8	8260B	ND		0.50	0.071	ug/L	1
1,1-Dichloroethane	75-34-3	8260B	ND		0.50	0.054	ug/L	1
1,2-Dichloroethane	107-06-2	8260B	ND		0.50	0.023	ug/L	1
trans-1,2-Dichloroethene	156-60-5	8260B	0.32	J	0.50	0.079	ug/L	1
1,1-Dichloroethene	75-35-4	8260B	ND		0.50	0.094	ug/L	1
cis-1,2-Dichloroethene	156-59-2	8260B	3.1		0.50	0.087	ug/L	1
1,2-Dichloropropane	78-87-5	8260B	ND		0.50	0.081	ug/L	1
trans-1,3-Dichloropropene	10061-02-6	8260B	ND		0.50	0.18	ug/L	1
cis-1,3-Dichloropropene	10061-01-5	8260B	ND		0.50	0.090	ug/L	1
Ethylbenzene	100-41-4	8260B	ND		0.50	0.17	ug/L	1
2-Hexanone	591-78-6	8260B	ND		10	0.27	ug/L	1
Isopropylbenzene	98-82-8	8260B	ND		0.50	0.029	ug/L	1
Methyl acetate	79-20-9	8260B	ND		1.0	0.30	ug/L	1
Methyl tertiary butyl ether (MTBE)	1634-04-4	8260B	ND		0.50	0.019	ug/L	1
4-Methyl-2-pentanone	108-10-1	8260B	ND		10	0.31	ug/L	1
Methylcyclohexane	108-87-2	8260B	ND		5.0	0.95	ug/L	1
Methylene chloride	75-09-2	8260B	0.24	BJ	0.50	0.17	ug/L	1
Styrene	100-42-5	8260B	ND		0.50	0.015	ug/L	1
1,1,2,2-Tetrachloroethane	79-34-5	8260B	ND		0.50	0.013	ug/L	1
Tetrachloroethene	127-18-4	8260B	5.5		0.50	0.014	ug/L	1
Toluene	108-88-3	8260B	ND		0.50	0.17	ug/L	1
1,1,2-Trichloro-1,2,2-Trifluoroethane	76-13-1	8260B	ND		0.50	0.30	ug/L	1
1,2,4-Trichlorobenzene	120-82-1	8260B	ND		0.50	0.17	ug/L	1
1,1,1-Trichloroethane	71-55-6	8260B	ND		0.50	0.029	ug/L	1
1,1,2-Trichloroethane	79-00-5	8260B	ND		0.50	0.031	ug/L	1

PQL = Practical quantitation limit
B = Detected in the method blank
E = Quantitation of compound exceeded the calibration range
ND = Not detected at or above the MDL
J = Estimated result < PQL and ≥ MDL
P = The RPD between two GC columns exceeds 40%
Where applicable, all soil sample analysis are reported on a dry weight basis unless flagged with a "W"
N = Recovery is out of criteria
H = Out of holding time

Volatile Organic Compounds by GC/MS

Client: ARCADIS U.S., Inc.
Laboratory ID: LD09018-008
Description: F39TW06 (30-35)
Matrix: Aqueous
Date Sampled: 04/07/2010 0830
Date Received: 04/09/2010

Run	Prep Method	Analytical Method	Dilution	Analysis Date	Analyst	Prep Date	Batch
1	5030B	8260B	1	04/14/2010 0728	LBS		31466

Parameter	CAS Number	Analytical Method	Result	Q	PQL	MDL	Units	Run
Trichloroethene	79-01-6	8260B	18		0.50	0.024	ug/L	1
Trichlorofluoromethane	75-69-4	8260B	ND		0.50	0.051	ug/L	1
Vinyl chloride	75-01-4	8260B	ND		0.50	0.065	ug/L	1
Xylenes (total)	1330-20-7	8260B	ND		0.50	0.17	ug/L	1

Surrogate	Q	Run 1 % Recovery	Acceptance Limits
1,2-Dichloroethane-d4		109	70-130
Bromofluorobenzene		94	70-130
Toluene-d8		108	70-130

PQL = Practical quantitation limit
B = Detected in the method blank
E = Quantitation of compound exceeded the calibration range
ND = Not detected at or above the MDL
J = Estimated result < PQL and ≥ MDL
P = The RPD between two GC columns exceeds 40%
Where applicable, all soil sample analysis are reported on a dry weight basis unless flagged with a "W"
N = Recovery is out of criteria
H = Out of holding time

Semivolatile Organic Compounds by GC/MS

Client: ARCADIS U.S., Inc.
Laboratory ID: LD09018-008
Description: F39TW06 (30-35)
Matrix: Aqueous
Date Sampled: 04/07/2010 0830
Date Received: 04/09/2010

Run	Prep Method	Analytical Method	Dilution	Analysis Date	Analyst	Prep Date	Batch
1	3520C	8270D	1	04/14/2010 0227	JGH	04/11/2010 1745	31258

Parameter	CAS Number	Analytical Method	Result	Q	PQL	MDL	Units	Run
Acenaphthene	83-32-9	8270D	ND		1.0	0.092	ug/L	1
Acenaphthylene	208-96-8	8270D	ND		1.0	0.16	ug/L	1
Acetophenone	98-86-2	8270D	ND		1.0	0.33	ug/L	1
Anthracene	120-12-7	8270D	ND		1.0	0.13	ug/L	1
Atrazine	1912-24-9	8270D	ND		1.0	0.20	ug/L	1
Benzaldehyde	100-52-7	8270D	ND		5.1	1.0	ug/L	1
Benzo(a)anthracene	56-55-3	8270D	ND		1.0	0.15	ug/L	1
Benzo(a)pyrene	50-32-8	8270D	ND		1.0	0.16	ug/L	1
Benzo(b)fluoranthene	205-99-2	8270D	ND		1.0	0.20	ug/L	1
Benzo(g,h,i)perylene	191-24-2	8270D	ND		1.0	0.23	ug/L	1
Benzo(k)fluoranthene	207-08-9	8270D	ND		1.0	0.12	ug/L	1
1,1'-Biphenyl	92-52-4	8270D	ND		1.0	0.20	ug/L	1
4-Bromophenyl phenyl ether	101-55-3	8270D	ND		1.0	0.12	ug/L	1
Butyl benzyl phthalate	85-68-7	8270D	ND		5.1	1.7	ug/L	1
Caprolactam	105-60-2	8270D	ND		5.1	1.2	ug/L	1
Carbazole	86-74-8	8270D	ND		1.0	0.26	ug/L	1
4-Chloro-3-methyl phenol	59-50-7	8270D	ND		1.0	0.22	ug/L	1
4-Chloroaniline	106-47-8	8270D	ND		1.0	0.13	ug/L	1
bis(2-Chloroethoxy)methane	111-91-1	8270D	ND		1.0	0.13	ug/L	1
bis(2-Chloroethyl)ether	111-44-4	8270D	ND		1.0	0.13	ug/L	1
bis(2-Chloroisopropyl)ether	108-60-1	8270D	ND		1.0	0.082	ug/L	1
2-Chloronaphthalene	91-58-7	8270D	ND		1.0	0.12	ug/L	1
2-Chlorophenol	95-57-8	8270D	ND		1.0	0.13	ug/L	1
4-Chlorophenyl phenyl ether	7005-72-3	8270D	ND		1.0	0.11	ug/L	1
Chrysene	218-01-9	8270D	ND		1.0	0.12	ug/L	1
Dibenzo(a,h)anthracene	53-70-3	8270D	ND		1.0	0.13	ug/L	1
Dibenzofuran	132-64-9	8270D	ND		1.0	0.16	ug/L	1
3,3'-Dichlorobenzidine	91-94-1	8270D	ND		5.1	0.83	ug/L	1
2,4-Dichlorophenol	120-83-2	8270D	ND		1.0	0.15	ug/L	1
Diethylphthalate	84-66-2	8270D	ND		5.1	1.7	ug/L	1
Dimethyl phthalate	131-11-3	8270D	ND		5.1	1.7	ug/L	1
2,4-Dimethylphenol	105-67-9	8270D	ND		1.0	0.32	ug/L	1
Di-n-butyl phthalate	84-74-2	8270D	ND		5.1	1.7	ug/L	1
4,6-Dinitro-2-methylphenol	534-52-1	8270D	ND		5.1	1.5	ug/L	1
2,4-Dinitrophenol	51-28-5	8270D	ND		5.1	0.26	ug/L	1
2,4-Dinitrotoluene	121-14-2	8270D	ND		2.0	0.46	ug/L	1
2,6-Dinitrotoluene	606-20-2	8270D	ND		2.0	0.41	ug/L	1
Di-n-octylphthalate	117-84-0	8270D	ND		5.1	1.7	ug/L	1
bis(2-Ethylhexyl)phthalate	117-81-7	8270D	ND		5.1	1.7	ug/L	1
Fluoranthene	206-44-0	8270D	ND		1.0	0.21	ug/L	1
Fluorene	86-73-7	8270D	ND		1.0	0.10	ug/L	1
Hexachlorobenzene	118-74-1	8270D	ND		1.0	0.21	ug/L	1
Hexachlorobutadiene	87-68-3	8270D	ND		1.0	0.092	ug/L	1
Hexachlorocyclopentadiene	77-47-4	8270D	ND		5.1	0.23	ug/L	1

PQL = Practical quantitation limit
B = Detected in the method blank
E = Quantitation of compound exceeded the calibration range
ND = Not detected at or above the MDL
J = Estimated result < PQL and ≥ MDL
P = The RPD between two GC columns exceeds 40%
Where applicable, all soil sample analysis are reported on a dry weight basis unless flagged with a "W"
N = Recovery is out of criteria
H = Out of holding time

Semivolatile Organic Compounds by GC/MS

Client: ARCADIS U.S., Inc.
Laboratory ID: LD09018-008
Description: F39TW06 (30-35)
Matrix: Aqueous
Date Sampled: 04/07/2010 0830
Date Received: 04/09/2010

Run	Prep Method	Analytical Method	Dilution	Analysis Date	Analyst	Prep Date	Batch
1	3520C	8270D	1	04/14/2010 0227	JGH	04/11/2010 1745	31258

Parameter	CAS Number	Analytical Method	Result	Q	PQL	MDL	Units	Run
Hexachloroethane	67-72-1	8270D	ND		1.0	0.11	ug/L	1
Indeno(1,2,3-c,d)pyrene	193-39-5	8270D	ND		1.0	0.23	ug/L	1
Isophorone	78-59-1	8270D	ND		1.0	0.082	ug/L	1
2-Methylnaphthalene	91-57-6	8270D	ND		1.0	0.082	ug/L	1
2-Methylphenol	95-48-7	8270D	ND		1.0	0.17	ug/L	1
3 & 4-Methylphenol	106-44-5	8270D	ND		2.0	0.58	ug/L	1
Naphthalene	91-20-3	8270D	ND		1.0	0.071	ug/L	1
2-Nitroaniline	88-74-4	8270D	ND		2.0	0.56	ug/L	1
3-Nitroaniline	99-09-2	8270D	ND		2.0	0.79	ug/L	1
4-Nitroaniline	100-01-6	8270D	ND		2.0	0.40	ug/L	1
Nitrobenzene	98-95-3	8270D	ND		1.0	0.10	ug/L	1
2-Nitrophenol	88-75-5	8270D	ND		2.0	0.28	ug/L	1
4-Nitrophenol	100-02-7	8270D	ND		5.1	0.65	ug/L	1
N-Nitrosodi-n-propylamine	621-64-7	8270D	ND		1.0	0.082	ug/L	1
N-Nitrosodiphenylamine (Diphenylamine)	86-30-6	8270D	ND		1.0	0.39	ug/L	1
Pentachlorophenol	87-86-5	8270D	ND		5.1	0.55	ug/L	1
Phenanthrene	85-01-8	8270D	ND		1.0	0.18	ug/L	1
Phenol	108-95-2	8270D	ND		1.0	0.11	ug/L	1
Pyrene	129-00-0	8270D	ND		1.0	0.16	ug/L	1
2,4,5-Trichlorophenol	95-95-4	8270D	ND		1.0	0.18	ug/L	1
2,4,6-Trichlorophenol	88-06-2	8270D	ND		1.0	0.22	ug/L	1

Surrogate	Q	Run 1 % Recovery	Acceptance Limits
2-Fluorobiphenyl		60	37-129
2-Fluorophenol		57	24-127
Nitrobenzene-d5		68	38-127
Phenol-d5		59	28-128
Terphenyl-d14		50	10-148
2,4,6-Tribromophenol		73	41-144

PQL = Practical quantitation limit
B = Detected in the method blank
E = Quantitation of compound exceeded the calibration range
ND = Not detected at or above the MDL
J = Estimated result < PQL and ≥ MDL
P = The RPD between two GC columns exceeds 40%
Where applicable, all soil sample analysis are reported on a dry weight basis unless flagged with a "W"
N = Recovery is out of criteria
H = Out of holding time

Volatile Organic Compounds by GC/MS

Client: ARCADIS U.S., Inc.
Laboratory ID: LD09018-009
Description: DUP-4
Matrix: Aqueous
Date Sampled: 04/07/2010 1200
Date Received: 04/09/2010

Run	Prep Method	Analytical Method	Dilution	Analysis Date	Analyst	Prep Date	Batch
1	5030B	8260B	1	04/14/2010 0749	LBS		31466

Parameter	CAS Number	Analytical Method	Result	Q	PQL	MDL	Units	Run
Acetone	67-64-1	8260B	7.5	J	10	0.061	ug/L	1
Benzene	71-43-2	8260B	0.26	J	0.50	0.027	ug/L	1
Bromodichloromethane	75-27-4	8260B	ND		0.50	0.17	ug/L	1
Bromoform	75-25-2	8260B	ND		0.50	0.010	ug/L	1
Bromomethane (Methyl bromide)	74-83-9	8260B	ND		0.50	0.20	ug/L	1
2-Butanone (MEK)	78-93-3	8260B	ND		10	2.0	ug/L	1
Carbon disulfide	75-15-0	8260B	0.25	J	0.50	0.097	ug/L	1
Carbon tetrachloride	56-23-5	8260B	ND		0.50	0.085	ug/L	1
Chlorobenzene	108-90-7	8260B	ND		0.50	0.17	ug/L	1
Chloroethane	75-00-3	8260B	ND		0.50	0.17	ug/L	1
Chloroform	67-66-3	8260B	ND		0.50	0.17	ug/L	1
Chloromethane (Methyl chloride)	74-87-3	8260B	ND		0.50	0.17	ug/L	1
Cyclohexane	110-82-7	8260B	ND		0.50	0.30	ug/L	1
1,2-Dibromo-3-chloropropane (DBCP)	96-12-8	8260B	ND		0.50	0.069	ug/L	1
Dibromochloromethane	124-48-1	8260B	ND		0.50	0.17	ug/L	1
1,2-Dibromoethane (EDB)	106-93-4	8260B	ND		0.50	0.061	ug/L	1
1,3-Dichlorobenzene	541-73-1	8260B	ND		0.50	0.17	ug/L	1
1,2-Dichlorobenzene	95-50-1	8260B	ND		0.50	0.17	ug/L	1
1,4-Dichlorobenzene	106-46-7	8260B	ND		0.50	0.17	ug/L	1
Dichlorodifluoromethane	75-71-8	8260B	ND		0.50	0.071	ug/L	1
1,1-Dichloroethane	75-34-3	8260B	ND		0.50	0.054	ug/L	1
1,2-Dichloroethane	107-06-2	8260B	ND		0.50	0.023	ug/L	1
trans-1,2-Dichloroethene	156-60-5	8260B	0.30	J	0.50	0.079	ug/L	1
1,1-Dichloroethene	75-35-4	8260B	ND		0.50	0.094	ug/L	1
cis-1,2-Dichloroethene	156-59-2	8260B	2.9		0.50	0.087	ug/L	1
1,2-Dichloropropane	78-87-5	8260B	ND		0.50	0.081	ug/L	1
trans-1,3-Dichloropropene	10061-02-6	8260B	ND		0.50	0.18	ug/L	1
cis-1,3-Dichloropropene	10061-01-5	8260B	ND		0.50	0.090	ug/L	1
Ethylbenzene	100-41-4	8260B	ND		0.50	0.17	ug/L	1
2-Hexanone	591-78-6	8260B	ND		10	0.27	ug/L	1
Isopropylbenzene	98-82-8	8260B	ND		0.50	0.029	ug/L	1
Methyl acetate	79-20-9	8260B	ND		1.0	0.30	ug/L	1
Methyl tertiary butyl ether (MTBE)	1634-04-4	8260B	ND		0.50	0.019	ug/L	1
4-Methyl-2-pentanone	108-10-1	8260B	ND		10	0.31	ug/L	1
Methylcyclohexane	108-87-2	8260B	ND		5.0	0.95	ug/L	1
Methylene chloride	75-09-2	8260B	0.26	BJ	0.50	0.17	ug/L	1
Styrene	100-42-5	8260B	ND		0.50	0.015	ug/L	1
1,1,2,2-Tetrachloroethane	79-34-5	8260B	ND		0.50	0.013	ug/L	1
Tetrachloroethene	127-18-4	8260B	5.2		0.50	0.014	ug/L	1
Toluene	108-88-3	8260B	ND		0.50	0.17	ug/L	1
1,1,2-Trichloro-1,2,2-Trifluoroethane	76-13-1	8260B	ND		0.50	0.30	ug/L	1
1,2,4-Trichlorobenzene	120-82-1	8260B	ND		0.50	0.17	ug/L	1
1,1,1-Trichloroethane	71-55-6	8260B	ND		0.50	0.029	ug/L	1
1,1,2-Trichloroethane	79-00-5	8260B	ND		0.50	0.031	ug/L	1

PQL = Practical quantitation limit
B = Detected in the method blank
E = Quantitation of compound exceeded the calibration range
ND = Not detected at or above the MDL
J = Estimated result < PQL and ≥ MDL
P = The RPD between two GC columns exceeds 40%
Where applicable, all soil sample analysis are reported on a dry weight basis unless flagged with a "W"
N = Recovery is out of criteria
H = Out of holding time

Volatile Organic Compounds by GC/MS

Client: ARCADIS U.S., Inc.
Laboratory ID: LD09018-009
Description: DUP-4
Matrix: Aqueous
Date Sampled: 04/07/2010 1200
Date Received: 04/09/2010

Run	Prep Method	Analytical Method	Dilution	Analysis Date	Analyst	Prep Date	Batch
1	5030B	8260B	1	04/14/2010 0749	LBS		31466

Parameter	CAS Number	Analytical Method	Result	Q	PQL	MDL	Units	Run
Trichloroethene	79-01-6	8260B	17		0.50	0.024	ug/L	1
Trichlorofluoromethane	75-69-4	8260B	ND		0.50	0.051	ug/L	1
Vinyl chloride	75-01-4	8260B	ND		0.50	0.065	ug/L	1
Xylenes (total)	1330-20-7	8260B	ND		0.50	0.17	ug/L	1

Surrogate	Q	Run 1 % Recovery	Acceptance Limits
1,2-Dichloroethane-d4		110	70-130
Bromofluorobenzene		94	70-130
Toluene-d8		107	70-130

PQL = Practical quantitation limit
B = Detected in the method blank
E = Quantitation of compound exceeded the calibration range
ND = Not detected at or above the MDL
J = Estimated result < PQL and ≥ MDL
P = The RPD between two GC columns exceeds 40%
Where applicable, all soil sample analysis are reported on a dry weight basis unless flagged with a "W"
N = Recovery is out of criteria
H = Out of holding time

Semivolatile Organic Compounds by GC/MS

Client: ARCADIS U.S., Inc.
Laboratory ID: LD09018-009
Description: DUP-4
Matrix: Aqueous
Date Sampled: 04/07/2010 1200
Date Received: 04/09/2010

Run	Prep Method	Analytical Method	Dilution	Analysis Date	Analyst	Prep Date	Batch
1	3520C	8270D	1	04/14/2010 0246	JGH	04/11/2010 1745	31258

Parameter	CAS Number	Analytical Method	Result	Q	PQL	MDL	Units	Run
Acenaphthene	83-32-9	8270D	ND		1.0	0.092	ug/L	1
Acenaphthylene	208-96-8	8270D	ND		1.0	0.16	ug/L	1
Acetophenone	98-86-2	8270D	ND		1.0	0.33	ug/L	1
Anthracene	120-12-7	8270D	ND		1.0	0.13	ug/L	1
Atrazine	1912-24-9	8270D	ND		1.0	0.20	ug/L	1
Benzaldehyde	100-52-7	8270D	ND		5.1	1.0	ug/L	1
Benzo(a)anthracene	56-55-3	8270D	ND		1.0	0.15	ug/L	1
Benzo(a)pyrene	50-32-8	8270D	ND		1.0	0.16	ug/L	1
Benzo(b)fluoranthene	205-99-2	8270D	ND		1.0	0.20	ug/L	1
Benzo(g,h,i)perylene	191-24-2	8270D	ND		1.0	0.23	ug/L	1
Benzo(k)fluoranthene	207-08-9	8270D	ND		1.0	0.12	ug/L	1
1,1'-Biphenyl	92-52-4	8270D	ND		1.0	0.20	ug/L	1
4-Bromophenyl phenyl ether	101-55-3	8270D	ND		1.0	0.12	ug/L	1
Butyl benzyl phthalate	85-68-7	8270D	ND		5.1	1.7	ug/L	1
Caprolactam	105-60-2	8270D	ND		5.1	1.2	ug/L	1
Carbazole	86-74-8	8270D	ND		1.0	0.26	ug/L	1
4-Chloro-3-methyl phenol	59-50-7	8270D	ND		1.0	0.22	ug/L	1
4-Chloroaniline	106-47-8	8270D	ND		1.0	0.13	ug/L	1
bis(2-Chloroethoxy)methane	111-91-1	8270D	ND		1.0	0.13	ug/L	1
bis(2-Chloroethyl)ether	111-44-4	8270D	ND		1.0	0.13	ug/L	1
bis(2-Chloroisopropyl)ether	108-60-1	8270D	ND		1.0	0.082	ug/L	1
2-Chloronaphthalene	91-58-7	8270D	ND		1.0	0.12	ug/L	1
2-Chlorophenol	95-57-8	8270D	ND		1.0	0.13	ug/L	1
4-Chlorophenyl phenyl ether	7005-72-3	8270D	ND		1.0	0.11	ug/L	1
Chrysene	218-01-9	8270D	ND		1.0	0.12	ug/L	1
Dibenzo(a,h)anthracene	53-70-3	8270D	ND		1.0	0.13	ug/L	1
Dibenzofuran	132-64-9	8270D	ND		1.0	0.16	ug/L	1
3,3'-Dichlorobenzidine	91-94-1	8270D	ND		5.1	0.83	ug/L	1
2,4-Dichlorophenol	120-83-2	8270D	ND		1.0	0.15	ug/L	1
Diethylphthalate	84-66-2	8270D	ND		5.1	1.7	ug/L	1
Dimethyl phthalate	131-11-3	8270D	ND		5.1	1.7	ug/L	1
2,4-Dimethylphenol	105-67-9	8270D	ND		1.0	0.32	ug/L	1
Di-n-butyl phthalate	84-74-2	8270D	ND		5.1	1.7	ug/L	1
4,6-Dinitro-2-methylphenol	534-52-1	8270D	ND		5.1	1.5	ug/L	1
2,4-Dinitrophenol	51-28-5	8270D	ND		5.1	0.26	ug/L	1
2,4-Dinitrotoluene	121-14-2	8270D	ND		2.0	0.46	ug/L	1
2,6-Dinitrotoluene	606-20-2	8270D	ND		2.0	0.41	ug/L	1
Di-n-octylphthalate	117-84-0	8270D	ND		5.1	1.7	ug/L	1
bis(2-Ethylhexyl)phthalate	117-81-7	8270D	ND		5.1	1.7	ug/L	1
Fluoranthene	206-44-0	8270D	ND		1.0	0.21	ug/L	1
Fluorene	86-73-7	8270D	ND		1.0	0.10	ug/L	1
Hexachlorobenzene	118-74-1	8270D	ND		1.0	0.21	ug/L	1
Hexachlorobutadiene	87-68-3	8270D	ND		1.0	0.092	ug/L	1
Hexachlorocyclopentadiene	77-47-4	8270D	ND		5.1	0.23	ug/L	1

PQL = Practical quantitation limit
B = Detected in the method blank
E = Quantitation of compound exceeded the calibration range
ND = Not detected at or above the MDL
J = Estimated result < PQL and ≥ MDL
P = The RPD between two GC columns exceeds 40%
Where applicable, all soil sample analysis are reported on a dry weight basis unless flagged with a "W"
N = Recovery is out of criteria
H = Out of holding time

Semivolatile Organic Compounds by GC/MS

Client: ARCADIS U.S., Inc.
Laboratory ID: LD09018-009
Description: DUP-4
Matrix: Aqueous
Date Sampled: 04/07/2010 1200
Date Received: 04/09/2010

Run	Prep Method	Analytical Method	Dilution	Analysis Date	Analyst	Prep Date	Batch
1	3520C	8270D	1	04/14/2010 0246	JGH	04/11/2010 1745	31258

Parameter	CAS Number	Analytical Method	Result	Q	PQL	MDL	Units	Run
Hexachloroethane	67-72-1	8270D	ND		1.0	0.11	ug/L	1
Indeno(1,2,3-c,d)pyrene	193-39-5	8270D	ND		1.0	0.23	ug/L	1
Isophorone	78-59-1	8270D	ND		1.0	0.082	ug/L	1
2-Methylnaphthalene	91-57-6	8270D	ND		1.0	0.082	ug/L	1
2-Methylphenol	95-48-7	8270D	ND		1.0	0.17	ug/L	1
3 & 4-Methylphenol	106-44-5	8270D	ND		2.0	0.58	ug/L	1
Naphthalene	91-20-3	8270D	ND		1.0	0.071	ug/L	1
2-Nitroaniline	88-74-4	8270D	ND		2.0	0.56	ug/L	1
3-Nitroaniline	99-09-2	8270D	ND		2.0	0.79	ug/L	1
4-Nitroaniline	100-01-6	8270D	ND		2.0	0.40	ug/L	1
Nitrobenzene	98-95-3	8270D	ND		1.0	0.10	ug/L	1
2-Nitrophenol	88-75-5	8270D	ND		2.0	0.28	ug/L	1
4-Nitrophenol	100-02-7	8270D	ND		5.1	0.65	ug/L	1
N-Nitrosodi-n-propylamine	621-64-7	8270D	ND		1.0	0.082	ug/L	1
N-Nitrosodiphenylamine (Diphenylamine)	86-30-6	8270D	ND		1.0	0.39	ug/L	1
Pentachlorophenol	87-86-5	8270D	ND		5.1	0.55	ug/L	1
Phenanthrene	85-01-8	8270D	ND		1.0	0.18	ug/L	1
Phenol	108-95-2	8270D	ND		1.0	0.11	ug/L	1
Pyrene	129-00-0	8270D	ND		1.0	0.16	ug/L	1
2,4,5-Trichlorophenol	95-95-4	8270D	ND		1.0	0.18	ug/L	1
2,4,6-Trichlorophenol	88-06-2	8270D	ND		1.0	0.22	ug/L	1

Surrogate	Q	Run 1 % Recovery	Acceptance Limits
2-Fluorobiphenyl		48	37-129
2-Fluorophenol		38	24-127
Nitrobenzene-d5		52	38-127
Phenol-d5		40	28-128
Terphenyl-d14		35	10-148
2,4,6-Tribromophenol		60	41-144

PQL = Practical quantitation limit
B = Detected in the method blank
E = Quantitation of compound exceeded the calibration range
ND = Not detected at or above the MDL
J = Estimated result < PQL and ≥ MDL
P = The RPD between two GC columns exceeds 40%
Where applicable, all soil sample analysis are reported on a dry weight basis unless flagged with a "W"
N = Recovery is out of criteria
H = Out of holding time

Volatile Organic Compounds by GC/MS

Client: ARCADIS U.S., Inc.
Laboratory ID: LD09018-010
Description: F39TW07 (40-45)
Matrix: Aqueous
Date Sampled: 04/07/2010 1545
Date Received: 04/09/2010

Run	Prep Method	Analytical Method	Dilution	Analysis Date	Analyst	Prep Date	Batch
1	5030B	8260B	1	04/14/2010 0811	LBS		31466

Parameter	CAS Number	Analytical Method	Result	Q	PQL	MDL	Units	Run
Acetone	67-64-1	8260B	17		10	0.061	ug/L	1
Benzene	71-43-2	8260B	0.22	J	0.50	0.027	ug/L	1
Bromodichloromethane	75-27-4	8260B	ND		0.50	0.17	ug/L	1
Bromoform	75-25-2	8260B	ND		0.50	0.010	ug/L	1
Bromomethane (Methyl bromide)	74-83-9	8260B	ND		0.50	0.20	ug/L	1
2-Butanone (MEK)	78-93-3	8260B	2.7	J	10	2.0	ug/L	1
Carbon disulfide	75-15-0	8260B	0.26	J	0.50	0.097	ug/L	1
Carbon tetrachloride	56-23-5	8260B	ND		0.50	0.085	ug/L	1
Chlorobenzene	108-90-7	8260B	ND		0.50	0.17	ug/L	1
Chloroethane	75-00-3	8260B	ND		0.50	0.17	ug/L	1
Chloroform	67-66-3	8260B	ND		0.50	0.17	ug/L	1
Chloromethane (Methyl chloride)	74-87-3	8260B	ND		0.50	0.17	ug/L	1
Cyclohexane	110-82-7	8260B	ND		0.50	0.30	ug/L	1
1,2-Dibromo-3-chloropropane (DBCP)	96-12-8	8260B	ND		0.50	0.069	ug/L	1
Dibromochloromethane	124-48-1	8260B	ND		0.50	0.17	ug/L	1
1,2-Dibromoethane (EDB)	106-93-4	8260B	ND		0.50	0.061	ug/L	1
1,3-Dichlorobenzene	541-73-1	8260B	ND		0.50	0.17	ug/L	1
1,2-Dichlorobenzene	95-50-1	8260B	ND		0.50	0.17	ug/L	1
1,4-Dichlorobenzene	106-46-7	8260B	ND		0.50	0.17	ug/L	1
Dichlorodifluoromethane	75-71-8	8260B	ND		0.50	0.071	ug/L	1
1,1-Dichloroethane	75-34-3	8260B	ND		0.50	0.054	ug/L	1
1,2-Dichloroethane	107-06-2	8260B	ND		0.50	0.023	ug/L	1
trans-1,2-Dichloroethene	156-60-5	8260B	ND		0.50	0.079	ug/L	1
1,1-Dichloroethene	75-35-4	8260B	ND		0.50	0.094	ug/L	1
cis-1,2-Dichloroethene	156-59-2	8260B	ND		0.50	0.087	ug/L	1
1,2-Dichloropropane	78-87-5	8260B	ND		0.50	0.081	ug/L	1
trans-1,3-Dichloropropene	10061-02-6	8260B	ND		0.50	0.18	ug/L	1
cis-1,3-Dichloropropene	10061-01-5	8260B	ND		0.50	0.090	ug/L	1
Ethylbenzene	100-41-4	8260B	ND		0.50	0.17	ug/L	1
2-Hexanone	591-78-6	8260B	ND		10	0.27	ug/L	1
Isopropylbenzene	98-82-8	8260B	ND		0.50	0.029	ug/L	1
Methyl acetate	79-20-9	8260B	ND		1.0	0.30	ug/L	1
Methyl tertiary butyl ether (MTBE)	1634-04-4	8260B	ND		0.50	0.019	ug/L	1
4-Methyl-2-pentanone	108-10-1	8260B	ND		10	0.31	ug/L	1
Methylcyclohexane	108-87-2	8260B	ND		5.0	0.95	ug/L	1
Methylene chloride	75-09-2	8260B	0.27	BJ	0.50	0.17	ug/L	1
Styrene	100-42-5	8260B	ND		0.50	0.015	ug/L	1
1,1,2,2-Tetrachloroethane	79-34-5	8260B	ND		0.50	0.013	ug/L	1
Tetrachloroethene	127-18-4	8260B	ND		0.50	0.014	ug/L	1
Toluene	108-88-3	8260B	0.44	J	0.50	0.17	ug/L	1
1,1,2-Trichloro-1,2,2-Trifluoroethane	76-13-1	8260B	ND		0.50	0.30	ug/L	1
1,2,4-Trichlorobenzene	120-82-1	8260B	ND		0.50	0.17	ug/L	1
1,1,1-Trichloroethane	71-55-6	8260B	ND		0.50	0.029	ug/L	1
1,1,2-Trichloroethane	79-00-5	8260B	ND		0.50	0.031	ug/L	1

PQL = Practical quantitation limit
B = Detected in the method blank
E = Quantitation of compound exceeded the calibration range
ND = Not detected at or above the MDL
J = Estimated result < PQL and ≥ MDL
P = The RPD between two GC columns exceeds 40%
Where applicable, all soil sample analysis are reported on a dry weight basis unless flagged with a "W"
N = Recovery is out of criteria
H = Out of holding time

Volatile Organic Compounds by GC/MS

Client: ARCADIS U.S., Inc.
Laboratory ID: LD09018-010
Description: F39TW07 (40-45)
Matrix: Aqueous
Date Sampled: 04/07/2010 1545
Date Received: 04/09/2010

Run	Prep Method	Analytical Method	Dilution	Analysis Date	Analyst	Prep Date	Batch
1	5030B	8260B	1	04/14/2010 0811	LBS		31466

Parameter	CAS Number	Analytical Method	Result	Q	PQL	MDL	Units	Run
Trichloroethene	79-01-6	8260B	ND		0.50	0.024	ug/L	1
Trichlorofluoromethane	75-69-4	8260B	ND		0.50	0.051	ug/L	1
Vinyl chloride	75-01-4	8260B	ND		0.50	0.065	ug/L	1
Xylenes (total)	1330-20-7	8260B	ND		0.50	0.17	ug/L	1

Surrogate	Q	Run 1 % Recovery	Acceptance Limits
1,2-Dichloroethane-d4		109	70-130
Bromofluorobenzene		96	70-130
Toluene-d8		107	70-130

PQL = Practical quantitation limit
B = Detected in the method blank
E = Quantitation of compound exceeded the calibration range
ND = Not detected at or above the MDL
J = Estimated result < PQL and ≥ MDL
P = The RPD between two GC columns exceeds 40%
Where applicable, all soil sample analysis are reported on a dry weight basis unless flagged with a "W"
N = Recovery is out of criteria
H = Out of holding time

Semivolatile Organic Compounds by GC/MS

Client: ARCADIS U.S., Inc.
Laboratory ID: LD09018-010
Description: F39TW07 (40-45)
Matrix: Aqueous
Date Sampled: 04/07/2010 1545
Date Received: 04/09/2010

Run	Prep Method	Analytical Method	Dilution	Analysis Date	Analyst	Prep Date	Batch
1	3520C	8270D	1	04/15/2010 2007	JGH	04/11/2010 1745	31258

Parameter	CAS Number	Analytical Method	Result	Q	PQL	MDL	Units	Run
Acenaphthene	83-32-9	8270D	ND		1.0	0.092	ug/L	1
Acenaphthylene	208-96-8	8270D	ND		1.0	0.16	ug/L	1
Acetophenone	98-86-2	8270D	ND		1.0	0.33	ug/L	1
Anthracene	120-12-7	8270D	ND		1.0	0.13	ug/L	1
Atrazine	1912-24-9	8270D	ND		1.0	0.20	ug/L	1
Benzaldehyde	100-52-7	8270D	ND		5.1	1.0	ug/L	1
Benzo(a)anthracene	56-55-3	8270D	ND		1.0	0.15	ug/L	1
Benzo(a)pyrene	50-32-8	8270D	ND		1.0	0.16	ug/L	1
Benzo(b)fluoranthene	205-99-2	8270D	ND		1.0	0.20	ug/L	1
Benzo(g,h,i)perylene	191-24-2	8270D	ND		1.0	0.23	ug/L	1
Benzo(k)fluoranthene	207-08-9	8270D	ND		1.0	0.12	ug/L	1
1,1'-Biphenyl	92-52-4	8270D	ND		1.0	0.20	ug/L	1
4-Bromophenyl phenyl ether	101-55-3	8270D	ND		1.0	0.12	ug/L	1
Butyl benzyl phthalate	85-68-7	8270D	ND		5.1	1.7	ug/L	1
Caprolactam	105-60-2	8270D	ND		5.1	1.2	ug/L	1
Carbazole	86-74-8	8270D	ND		1.0	0.26	ug/L	1
4-Chloro-3-methyl phenol	59-50-7	8270D	ND		1.0	0.22	ug/L	1
4-Chloroaniline	106-47-8	8270D	ND		1.0	0.13	ug/L	1
bis(2-Chloroethoxy)methane	111-91-1	8270D	ND		1.0	0.13	ug/L	1
bis(2-Chloroethyl)ether	111-44-4	8270D	ND		1.0	0.13	ug/L	1
bis(2-Chloroisopropyl)ether	108-60-1	8270D	ND		1.0	0.082	ug/L	1
2-Chloronaphthalene	91-58-7	8270D	ND		1.0	0.12	ug/L	1
2-Chlorophenol	95-57-8	8270D	ND		1.0	0.13	ug/L	1
4-Chlorophenyl phenyl ether	7005-72-3	8270D	ND		1.0	0.11	ug/L	1
Chrysene	218-01-9	8270D	ND		1.0	0.12	ug/L	1
Dibenzo(a,h)anthracene	53-70-3	8270D	ND		1.0	0.13	ug/L	1
Dibenzofuran	132-64-9	8270D	ND		1.0	0.16	ug/L	1
3,3'-Dichlorobenzidine	91-94-1	8270D	ND		5.1	0.83	ug/L	1
2,4-Dichlorophenol	120-83-2	8270D	ND		1.0	0.15	ug/L	1
Diethylphthalate	84-66-2	8270D	2.9	J	5.1	1.7	ug/L	1
Dimethyl phthalate	131-11-3	8270D	ND		5.1	1.7	ug/L	1
2,4-Dimethylphenol	105-67-9	8270D	ND		1.0	0.32	ug/L	1
Di-n-butyl phthalate	84-74-2	8270D	ND		5.1	1.7	ug/L	1
4,6-Dinitro-2-methylphenol	534-52-1	8270D	ND		5.1	1.5	ug/L	1
2,4-Dinitrophenol	51-28-5	8270D	ND		5.1	0.26	ug/L	1
2,4-Dinitrotoluene	121-14-2	8270D	ND		2.0	0.46	ug/L	1
2,6-Dinitrotoluene	606-20-2	8270D	ND		2.0	0.41	ug/L	1
Di-n-octylphthalate	117-84-0	8270D	ND		5.1	1.7	ug/L	1
bis(2-Ethylhexyl)phthalate	117-81-7	8270D	ND		5.1	1.7	ug/L	1
Fluoranthene	206-44-0	8270D	ND		1.0	0.21	ug/L	1
Fluorene	86-73-7	8270D	ND		1.0	0.10	ug/L	1
Hexachlorobenzene	118-74-1	8270D	ND		1.0	0.21	ug/L	1
Hexachlorobutadiene	87-68-3	8270D	ND		1.0	0.092	ug/L	1
Hexachlorocyclopentadiene	77-47-4	8270D	ND		5.1	0.23	ug/L	1

PQL = Practical quantitation limit
B = Detected in the method blank
E = Quantitation of compound exceeded the calibration range
ND = Not detected at or above the MDL
J = Estimated result < PQL and ≥ MDL
P = The RPD between two GC columns exceeds 40%
Where applicable, all soil sample analysis are reported on a dry weight basis unless flagged with a "W"
N = Recovery is out of criteria
H = Out of holding time

Semivolatile Organic Compounds by GC/MS

Client: ARCADIS U.S., Inc.
Laboratory ID: LD09018-010
Description: F39TW07 (40-45)
Matrix: Aqueous
Date Sampled: 04/07/2010 1545
Date Received: 04/09/2010

Run	Prep Method	Analytical Method	Dilution	Analysis Date	Analyst	Prep Date	Batch
1	3520C	8270D	1	04/15/2010 2007	JGH	04/11/2010 1745	31258

Parameter	CAS Number	Analytical Method	Result	Q	PQL	MDL	Units	Run
Hexachloroethane	67-72-1	8270D	ND		1.0	0.11	ug/L	1
Indeno(1,2,3-c,d)pyrene	193-39-5	8270D	ND		1.0	0.23	ug/L	1
Isophorone	78-59-1	8270D	ND		1.0	0.082	ug/L	1
2-Methylnaphthalene	91-57-6	8270D	ND		1.0	0.082	ug/L	1
2-Methylphenol	95-48-7	8270D	ND		1.0	0.17	ug/L	1
3 & 4-Methylphenol	106-44-5	8270D	ND		2.0	0.58	ug/L	1
Naphthalene	91-20-3	8270D	ND		1.0	0.071	ug/L	1
2-Nitroaniline	88-74-4	8270D	ND		2.0	0.56	ug/L	1
3-Nitroaniline	99-09-2	8270D	ND		2.0	0.79	ug/L	1
4-Nitroaniline	100-01-6	8270D	ND		2.0	0.40	ug/L	1
Nitrobenzene	98-95-3	8270D	ND		1.0	0.10	ug/L	1
2-Nitrophenol	88-75-5	8270D	ND		2.0	0.28	ug/L	1
4-Nitrophenol	100-02-7	8270D	ND		5.1	0.65	ug/L	1
N-Nitrosodi-n-propylamine	621-64-7	8270D	ND		1.0	0.082	ug/L	1
N-Nitrosodiphenylamine (Diphenylamine)	86-30-6	8270D	ND		1.0	0.39	ug/L	1
Pentachlorophenol	87-86-5	8270D	ND		5.1	0.55	ug/L	1
Phenanthrene	85-01-8	8270D	ND		1.0	0.18	ug/L	1
Phenol	108-95-2	8270D	ND		1.0	0.11	ug/L	1
Pyrene	129-00-0	8270D	ND		1.0	0.16	ug/L	1
2,4,5-Trichlorophenol	95-95-4	8270D	ND		1.0	0.18	ug/L	1
2,4,6-Trichlorophenol	88-06-2	8270D	ND		1.0	0.22	ug/L	1

Surrogate	Q	Run 1 % Recovery	Acceptance Limits
2-Fluorobiphenyl		61	37-129
2-Fluorophenol		52	24-127
Nitrobenzene-d5		59	38-127
Phenol-d5		56	28-128
Terphenyl-d14		12	10-148
2,4,6-Tribromophenol		89	41-144

PQL = Practical quantitation limit
B = Detected in the method blank
E = Quantitation of compound exceeded the calibration range
ND = Not detected at or above the MDL
J = Estimated result < PQL and ≥ MDL
P = The RPD between two GC columns exceeds 40%
Where applicable, all soil sample analysis are reported on a dry weight basis unless flagged with a "W"
N = Recovery is out of criteria
H = Out of holding time

Volatile Organic Compounds by GC/MS

Client: ARCADIS U.S., Inc.
Laboratory ID: LD09018-011
Description: F39TW07 (10-15)
Matrix: Aqueous
Date Sampled: 04/07/2010 1600
Date Received: 04/09/2010

Run	Prep Method	Analytical Method	Dilution	Analysis Date	Analyst	Prep Date	Batch
1	5030B	8260B	1	04/14/2010 0832	LBS		31466

Parameter	CAS Number	Analytical Method	Result	Q	PQL	MDL	Units	Run
Acetone	67-64-1	8260B	20		10	0.061	ug/L	1
Benzene	71-43-2	8260B	ND		0.50	0.027	ug/L	1
Bromodichloromethane	75-27-4	8260B	ND		0.50	0.17	ug/L	1
Bromoform	75-25-2	8260B	ND		0.50	0.010	ug/L	1
Bromomethane (Methyl bromide)	74-83-9	8260B	ND		0.50	0.20	ug/L	1
2-Butanone (MEK)	78-93-3	8260B	ND		10	2.0	ug/L	1
Carbon disulfide	75-15-0	8260B	0.96		0.50	0.097	ug/L	1
Carbon tetrachloride	56-23-5	8260B	ND		0.50	0.085	ug/L	1
Chlorobenzene	108-90-7	8260B	ND		0.50	0.17	ug/L	1
Chloroethane	75-00-3	8260B	ND		0.50	0.17	ug/L	1
Chloroform	67-66-3	8260B	ND		0.50	0.17	ug/L	1
Chloromethane (Methyl chloride)	74-87-3	8260B	ND		0.50	0.17	ug/L	1
Cyclohexane	110-82-7	8260B	ND		0.50	0.30	ug/L	1
1,2-Dibromo-3-chloropropane (DBCP)	96-12-8	8260B	ND		0.50	0.069	ug/L	1
Dibromochloromethane	124-48-1	8260B	ND		0.50	0.17	ug/L	1
1,2-Dibromoethane (EDB)	106-93-4	8260B	ND		0.50	0.061	ug/L	1
1,3-Dichlorobenzene	541-73-1	8260B	ND		0.50	0.17	ug/L	1
1,2-Dichlorobenzene	95-50-1	8260B	ND		0.50	0.17	ug/L	1
1,4-Dichlorobenzene	106-46-7	8260B	ND		0.50	0.17	ug/L	1
Dichlorodifluoromethane	75-71-8	8260B	ND		0.50	0.071	ug/L	1
1,1-Dichloroethane	75-34-3	8260B	ND		0.50	0.054	ug/L	1
1,2-Dichloroethane	107-06-2	8260B	ND		0.50	0.023	ug/L	1
trans-1,2-Dichloroethene	156-60-5	8260B	ND		0.50	0.079	ug/L	1
1,1-Dichloroethene	75-35-4	8260B	ND		0.50	0.094	ug/L	1
cis-1,2-Dichloroethene	156-59-2	8260B	0.21	J	0.50	0.087	ug/L	1
1,2-Dichloropropane	78-87-5	8260B	ND		0.50	0.081	ug/L	1
trans-1,3-Dichloropropene	10061-02-6	8260B	ND		0.50	0.18	ug/L	1
cis-1,3-Dichloropropene	10061-01-5	8260B	ND		0.50	0.090	ug/L	1
Ethylbenzene	100-41-4	8260B	ND		0.50	0.17	ug/L	1
2-Hexanone	591-78-6	8260B	ND		10	0.27	ug/L	1
Isopropylbenzene	98-82-8	8260B	ND		0.50	0.029	ug/L	1
Methyl acetate	79-20-9	8260B	ND		1.0	0.30	ug/L	1
Methyl tertiary butyl ether (MTBE)	1634-04-4	8260B	ND		0.50	0.019	ug/L	1
4-Methyl-2-pentanone	108-10-1	8260B	ND		10	0.31	ug/L	1
Methylcyclohexane	108-87-2	8260B	ND		5.0	0.95	ug/L	1
Methylene chloride	75-09-2	8260B	0.25	BJ	0.50	0.17	ug/L	1
Styrene	100-42-5	8260B	ND		0.50	0.015	ug/L	1
1,1,2,2-Tetrachloroethane	79-34-5	8260B	ND		0.50	0.013	ug/L	1
Tetrachloroethene	127-18-4	8260B	ND		0.50	0.014	ug/L	1
Toluene	108-88-3	8260B	ND		0.50	0.17	ug/L	1
1,1,2-Trichloro-1,2,2-Trifluoroethane	76-13-1	8260B	ND		0.50	0.30	ug/L	1
1,2,4-Trichlorobenzene	120-82-1	8260B	ND		0.50	0.17	ug/L	1
1,1,1-Trichloroethane	71-55-6	8260B	ND		0.50	0.029	ug/L	1
1,1,2-Trichloroethane	79-00-5	8260B	ND		0.50	0.031	ug/L	1

PQL = Practical quantitation limit
B = Detected in the method blank
E = Quantitation of compound exceeded the calibration range
ND = Not detected at or above the MDL
J = Estimated result < PQL and ≥ MDL
P = The RPD between two GC columns exceeds 40%
Where applicable, all soil sample analysis are reported on a dry weight basis unless flagged with a "W"
N = Recovery is out of criteria
H = Out of holding time

Volatile Organic Compounds by GC/MS

Client: ARCADIS U.S., Inc.
Laboratory ID: LD09018-011
Description: F39TW07 (10-15)
Matrix: Aqueous
Date Sampled: 04/07/2010 1600
Date Received: 04/09/2010

Run	Prep Method	Analytical Method	Dilution	Analysis Date	Analyst	Prep Date	Batch
1	5030B	8260B	1	04/14/2010 0832	LBS		31466

Parameter	CAS Number	Analytical Method	Result	Q	PQL	MDL	Units	Run
Trichloroethene	79-01-6	8260B	0.76		0.50	0.024	ug/L	1
Trichlorofluoromethane	75-69-4	8260B	ND		0.50	0.051	ug/L	1
Vinyl chloride	75-01-4	8260B	ND		0.50	0.065	ug/L	1
Xylenes (total)	1330-20-7	8260B	ND		0.50	0.17	ug/L	1

Surrogate	Q	Run 1 % Recovery	Acceptance Limits
1,2-Dichloroethane-d4		110	70-130
Bromofluorobenzene		95	70-130
Toluene-d8		107	70-130

PQL = Practical quantitation limit
B = Detected in the method blank
E = Quantitation of compound exceeded the calibration range
ND = Not detected at or above the MDL
J = Estimated result < PQL and ≥ MDL
P = The RPD between two GC columns exceeds 40%
Where applicable, all soil sample analysis are reported on a dry weight basis unless flagged with a "W"
N = Recovery is out of criteria
H = Out of holding time

Semivolatile Organic Compounds by GC/MS

Client: ARCADIS U.S., Inc.
Laboratory ID: LD09018-011
Description: F39TW07 (10-15)
Matrix: Aqueous
Date Sampled: 04/07/2010 1600
Date Received: 04/09/2010

Run	Prep Method	Analytical Method	Dilution	Analysis Date	Analyst	Prep Date	Batch
1	3520C	8270D	1	04/15/2010 2027	JGH	04/11/2010 1745	31258

Parameter	CAS Number	Analytical Method	Result	Q	PQL	MDL	Units	Run
Acenaphthene	83-32-9	8270D	ND		1.0	0.092	ug/L	1
Acenaphthylene	208-96-8	8270D	ND		1.0	0.16	ug/L	1
Acetophenone	98-86-2	8270D	ND		1.0	0.33	ug/L	1
Anthracene	120-12-7	8270D	ND		1.0	0.13	ug/L	1
Atrazine	1912-24-9	8270D	ND		1.0	0.20	ug/L	1
Benzaldehyde	100-52-7	8270D	ND		5.1	1.0	ug/L	1
Benzo(a)anthracene	56-55-3	8270D	ND		1.0	0.15	ug/L	1
Benzo(a)pyrene	50-32-8	8270D	ND		1.0	0.16	ug/L	1
Benzo(b)fluoranthene	205-99-2	8270D	ND		1.0	0.20	ug/L	1
Benzo(g,h,i)perylene	191-24-2	8270D	ND		1.0	0.23	ug/L	1
Benzo(k)fluoranthene	207-08-9	8270D	ND		1.0	0.12	ug/L	1
1,1'-Biphenyl	92-52-4	8270D	ND		1.0	0.20	ug/L	1
4-Bromophenyl phenyl ether	101-55-3	8270D	ND		1.0	0.12	ug/L	1
Butyl benzyl phthalate	85-68-7	8270D	ND		5.1	1.7	ug/L	1
Caprolactam	105-60-2	8270D	ND		5.1	1.2	ug/L	1
Carbazole	86-74-8	8270D	ND		1.0	0.26	ug/L	1
4-Chloro-3-methyl phenol	59-50-7	8270D	ND		1.0	0.22	ug/L	1
4-Chloroaniline	106-47-8	8270D	ND		1.0	0.13	ug/L	1
bis(2-Chloroethoxy)methane	111-91-1	8270D	ND		1.0	0.13	ug/L	1
bis(2-Chloroethyl)ether	111-44-4	8270D	ND		1.0	0.13	ug/L	1
bis(2-Chloroisopropyl)ether	108-60-1	8270D	ND		1.0	0.082	ug/L	1
2-Chloronaphthalene	91-58-7	8270D	ND		1.0	0.12	ug/L	1
2-Chlorophenol	95-57-8	8270D	ND		1.0	0.13	ug/L	1
4-Chlorophenyl phenyl ether	7005-72-3	8270D	ND		1.0	0.11	ug/L	1
Chrysene	218-01-9	8270D	ND		1.0	0.12	ug/L	1
Dibenzo(a,h)anthracene	53-70-3	8270D	ND		1.0	0.13	ug/L	1
Dibenzofuran	132-64-9	8270D	ND		1.0	0.16	ug/L	1
3,3'-Dichlorobenzidine	91-94-1	8270D	ND		5.1	0.83	ug/L	1
2,4-Dichlorophenol	120-83-2	8270D	ND		1.0	0.15	ug/L	1
Diethylphthalate	84-66-2	8270D	ND		5.1	1.7	ug/L	1
Dimethyl phthalate	131-11-3	8270D	ND		5.1	1.7	ug/L	1
2,4-Dimethylphenol	105-67-9	8270D	ND		1.0	0.32	ug/L	1
Di-n-butyl phthalate	84-74-2	8270D	ND		5.1	1.7	ug/L	1
4,6-Dinitro-2-methylphenol	534-52-1	8270D	ND		5.1	1.5	ug/L	1
2,4-Dinitrophenol	51-28-5	8270D	ND		5.1	0.26	ug/L	1
2,4-Dinitrotoluene	121-14-2	8270D	ND		2.0	0.46	ug/L	1
2,6-Dinitrotoluene	606-20-2	8270D	ND		2.0	0.41	ug/L	1
Di-n-octylphthalate	117-84-0	8270D	ND		5.1	1.7	ug/L	1
bis(2-Ethylhexyl)phthalate	117-81-7	8270D	ND		5.1	1.7	ug/L	1
Fluoranthene	206-44-0	8270D	ND		1.0	0.21	ug/L	1
Fluorene	86-73-7	8270D	ND		1.0	0.10	ug/L	1
Hexachlorobenzene	118-74-1	8270D	ND		1.0	0.21	ug/L	1
Hexachlorobutadiene	87-68-3	8270D	ND		1.0	0.092	ug/L	1
Hexachlorocyclopentadiene	77-47-4	8270D	ND		5.1	0.23	ug/L	1

PQL = Practical quantitation limit
B = Detected in the method blank
E = Quantitation of compound exceeded the calibration range
ND = Not detected at or above the MDL
J = Estimated result < PQL and ≥ MDL
P = The RPD between two GC columns exceeds 40%
Where applicable, all soil sample analysis are reported on a dry weight basis unless flagged with a "W"
N = Recovery is out of criteria
H = Out of holding time

Semivolatile Organic Compounds by GC/MS

Client: ARCADIS U.S., Inc.
Laboratory ID: LD09018-011
Description: F39TW07 (10-15)
Matrix: Aqueous
Date Sampled: 04/07/2010 1600
Date Received: 04/09/2010

Run	Prep Method	Analytical Method	Dilution	Analysis Date	Analyst	Prep Date	Batch
1	3520C	8270D	1	04/15/2010 2027	JGH	04/11/2010 1745	31258

Parameter	CAS Number	Analytical Method	Result	Q	PQL	MDL	Units	Run
Hexachloroethane	67-72-1	8270D	ND		1.0	0.11	ug/L	1
Indeno(1,2,3-c,d)pyrene	193-39-5	8270D	ND		1.0	0.23	ug/L	1
Isophorone	78-59-1	8270D	ND		1.0	0.082	ug/L	1
2-Methylnaphthalene	91-57-6	8270D	ND		1.0	0.082	ug/L	1
2-Methylphenol	95-48-7	8270D	ND		1.0	0.17	ug/L	1
3 & 4-Methylphenol	106-44-5	8270D	ND		2.0	0.58	ug/L	1
Naphthalene	91-20-3	8270D	ND		1.0	0.071	ug/L	1
2-Nitroaniline	88-74-4	8270D	ND		2.0	0.56	ug/L	1
3-Nitroaniline	99-09-2	8270D	ND		2.0	0.79	ug/L	1
4-Nitroaniline	100-01-6	8270D	ND		2.0	0.40	ug/L	1
Nitrobenzene	98-95-3	8270D	ND		1.0	0.10	ug/L	1
2-Nitrophenol	88-75-5	8270D	ND		2.0	0.28	ug/L	1
4-Nitrophenol	100-02-7	8270D	ND		5.1	0.65	ug/L	1
N-Nitrosodi-n-propylamine	621-64-7	8270D	ND		1.0	0.082	ug/L	1
N-Nitrosodiphenylamine (Diphenylamine)	86-30-6	8270D	ND		1.0	0.39	ug/L	1
Pentachlorophenol	87-86-5	8270D	ND		5.1	0.55	ug/L	1
Phenanthrene	85-01-8	8270D	ND		1.0	0.18	ug/L	1
Phenol	108-95-2	8270D	ND		1.0	0.11	ug/L	1
Pyrene	129-00-0	8270D	ND		1.0	0.16	ug/L	1
2,4,5-Trichlorophenol	95-95-4	8270D	ND		1.0	0.18	ug/L	1
2,4,6-Trichlorophenol	88-06-2	8270D	ND		1.0	0.22	ug/L	1

Surrogate	Q	Run 1 % Recovery	Acceptance Limits
2-Fluorobiphenyl		78	37-129
2-Fluorophenol		57	24-127
Nitrobenzene-d5		66	38-127
Phenol-d5		61	28-128
Terphenyl-d14		38	10-148
2,4,6-Tribromophenol		110	41-144

PQL = Practical quantitation limit
B = Detected in the method blank
E = Quantitation of compound exceeded the calibration range
ND = Not detected at or above the MDL
J = Estimated result < PQL and ≥ MDL
P = The RPD between two GC columns exceeds 40%
Where applicable, all soil sample analysis are reported on a dry weight basis unless flagged with a "W"
N = Recovery is out of criteria
H = Out of holding time

Volatile Organic Compounds by GC/MS

Client: ARCADIS U.S., Inc.
Laboratory ID: LD09018-012
Description: F39TW07 (20-25)
Matrix: Aqueous
Date Sampled: 04/08/2010 0845
Date Received: 04/09/2010

Run	Prep Method	Analytical Method	Dilution	Analysis Date	Analyst	Prep Date	Batch
1	5030B	8260B	1	04/14/2010 1850	LBS		31526

Parameter	CAS Number	Analytical Method	Result	Q	PQL	MDL	Units	Run
Acetone	67-64-1	8260B	10		10	0.061	ug/L	1
Benzene	71-43-2	8260B	0.30	J	0.50	0.027	ug/L	1
Bromodichloromethane	75-27-4	8260B	ND		0.50	0.17	ug/L	1
Bromoform	75-25-2	8260B	ND		0.50	0.010	ug/L	1
Bromomethane (Methyl bromide)	74-83-9	8260B	ND		0.50	0.20	ug/L	1
2-Butanone (MEK)	78-93-3	8260B	2.0	J	10	2.0	ug/L	1
Carbon disulfide	75-15-0	8260B	0.34	J	0.50	0.097	ug/L	1
Carbon tetrachloride	56-23-5	8260B	ND		0.50	0.085	ug/L	1
Chlorobenzene	108-90-7	8260B	ND		0.50	0.17	ug/L	1
Chloroethane	75-00-3	8260B	ND		0.50	0.17	ug/L	1
Chloroform	67-66-3	8260B	ND		0.50	0.17	ug/L	1
Chloromethane (Methyl chloride)	74-87-3	8260B	ND		0.50	0.17	ug/L	1
Cyclohexane	110-82-7	8260B	ND		0.50	0.30	ug/L	1
1,2-Dibromo-3-chloropropane (DBCP)	96-12-8	8260B	ND		0.50	0.069	ug/L	1
Dibromochloromethane	124-48-1	8260B	ND		0.50	0.17	ug/L	1
1,2-Dibromoethane (EDB)	106-93-4	8260B	ND		0.50	0.061	ug/L	1
1,3-Dichlorobenzene	541-73-1	8260B	ND		0.50	0.17	ug/L	1
1,2-Dichlorobenzene	95-50-1	8260B	ND		0.50	0.17	ug/L	1
1,4-Dichlorobenzene	106-46-7	8260B	ND		0.50	0.17	ug/L	1
Dichlorodifluoromethane	75-71-8	8260B	ND		0.50	0.071	ug/L	1
1,1-Dichloroethane	75-34-3	8260B	ND		0.50	0.054	ug/L	1
1,2-Dichloroethane	107-06-2	8260B	ND		0.50	0.023	ug/L	1
trans-1,2-Dichloroethene	156-60-5	8260B	0.12	J	0.50	0.079	ug/L	1
1,1-Dichloroethene	75-35-4	8260B	ND		0.50	0.094	ug/L	1
cis-1,2-Dichloroethene	156-59-2	8260B	0.42	J	0.50	0.087	ug/L	1
1,2-Dichloropropane	78-87-5	8260B	ND		0.50	0.081	ug/L	1
trans-1,3-Dichloropropene	10061-02-6	8260B	ND		0.50	0.18	ug/L	1
cis-1,3-Dichloropropene	10061-01-5	8260B	ND		0.50	0.090	ug/L	1
Ethylbenzene	100-41-4	8260B	ND		0.50	0.17	ug/L	1
2-Hexanone	591-78-6	8260B	ND		10	0.27	ug/L	1
Isopropylbenzene	98-82-8	8260B	ND		0.50	0.029	ug/L	1
Methyl acetate	79-20-9	8260B	ND		1.0	0.30	ug/L	1
Methyl tertiary butyl ether (MTBE)	1634-04-4	8260B	ND		0.50	0.019	ug/L	1
4-Methyl-2-pentanone	108-10-1	8260B	ND		10	0.31	ug/L	1
Methylcyclohexane	108-87-2	8260B	ND		5.0	0.95	ug/L	1
Methylene chloride	75-09-2	8260B	0.34	BJ	0.50	0.17	ug/L	1
Styrene	100-42-5	8260B	ND		0.50	0.015	ug/L	1
1,1,2,2-Tetrachloroethane	79-34-5	8260B	ND		0.50	0.013	ug/L	1
Tetrachloroethene	127-18-4	8260B	ND		0.50	0.014	ug/L	1
Toluene	108-88-3	8260B	0.41	J	0.50	0.17	ug/L	1
1,1,2-Trichloro-1,2,2-Trifluoroethane	76-13-1	8260B	ND		0.50	0.30	ug/L	1
1,2,4-Trichlorobenzene	120-82-1	8260B	ND		0.50	0.17	ug/L	1
1,1,1-Trichloroethane	71-55-6	8260B	ND		0.50	0.029	ug/L	1
1,1,2-Trichloroethane	79-00-5	8260B	ND		0.50	0.031	ug/L	1

PQL = Practical quantitation limit
B = Detected in the method blank
E = Quantitation of compound exceeded the calibration range
ND = Not detected at or above the MDL
J = Estimated result < PQL and ≥ MDL
P = The RPD between two GC columns exceeds 40%
Where applicable, all soil sample analysis are reported on a dry weight basis unless flagged with a "W"
N = Recovery is out of criteria
H = Out of holding time

Volatile Organic Compounds by GC/MS

Client: ARCADIS U.S., Inc.
Laboratory ID: LD09018-012
Description: F39TW07 (20-25)
Matrix: Aqueous
Date Sampled: 04/08/2010 0845
Date Received: 04/09/2010

Run	Prep Method	Analytical Method	Dilution	Analysis Date	Analyst	Prep Date	Batch
1	5030B	8260B	1	04/14/2010 1850	LBS		31526

Parameter	CAS Number	Analytical Method	Result	Q	PQL	MDL	Units	Run
Trichloroethene	79-01-6	8260B	1.6		0.50	0.024	ug/L	1
Trichlorofluoromethane	75-69-4	8260B	ND		0.50	0.051	ug/L	1
Vinyl chloride	75-01-4	8260B	ND		0.50	0.065	ug/L	1
Xylenes (total)	1330-20-7	8260B	ND		0.50	0.17	ug/L	1

Surrogate	Q	Run 1 % Recovery	Acceptance Limits
1,2-Dichloroethane-d4		99	70-130
Bromofluorobenzene		93	70-130
Toluene-d8		104	70-130

PQL = Practical quantitation limit
B = Detected in the method blank
E = Quantitation of compound exceeded the calibration range
ND = Not detected at or above the MDL
J = Estimated result < PQL and ≥ MDL
P = The RPD between two GC columns exceeds 40%
Where applicable, all soil sample analysis are reported on a dry weight basis unless flagged with a "W"
N = Recovery is out of criteria
H = Out of holding time

Semivolatile Organic Compounds by GC/MS

Client: ARCADIS U.S., Inc.
Laboratory ID: LD09018-012
Description: F39TW07 (20-25)
Matrix: Aqueous
Date Sampled: 04/08/2010 0845
Date Received: 04/09/2010

Run	Prep Method	Analytical Method	Dilution	Analysis Date	Analyst	Prep Date	Batch
1	3520C	8270D	1	04/15/2010 1517	JGH	04/11/2010 1745	31258

Parameter	CAS Number	Analytical Method	Result	Q	PQL	MDL	Units	Run
Acenaphthene	83-32-9	8270D	ND		1.0	0.092	ug/L	1
Acenaphthylene	208-96-8	8270D	ND		1.0	0.16	ug/L	1
Acetophenone	98-86-2	8270D	ND		1.0	0.33	ug/L	1
Anthracene	120-12-7	8270D	ND		1.0	0.13	ug/L	1
Atrazine	1912-24-9	8270D	ND		1.0	0.20	ug/L	1
Benzaldehyde	100-52-7	8270D	ND		5.1	1.0	ug/L	1
Benzo(a)anthracene	56-55-3	8270D	ND		1.0	0.15	ug/L	1
Benzo(a)pyrene	50-32-8	8270D	ND		1.0	0.16	ug/L	1
Benzo(b)fluoranthene	205-99-2	8270D	ND		1.0	0.20	ug/L	1
Benzo(g,h,i)perylene	191-24-2	8270D	ND		1.0	0.23	ug/L	1
Benzo(k)fluoranthene	207-08-9	8270D	ND		1.0	0.12	ug/L	1
1,1'-Biphenyl	92-52-4	8270D	ND		1.0	0.20	ug/L	1
4-Bromophenyl phenyl ether	101-55-3	8270D	ND		1.0	0.12	ug/L	1
Butyl benzyl phthalate	85-68-7	8270D	ND		5.1	1.7	ug/L	1
Caprolactam	105-60-2	8270D	ND		5.1	1.2	ug/L	1
Carbazole	86-74-8	8270D	ND		1.0	0.26	ug/L	1
4-Chloro-3-methyl phenol	59-50-7	8270D	ND		1.0	0.22	ug/L	1
4-Chloroaniline	106-47-8	8270D	ND		1.0	0.13	ug/L	1
bis(2-Chloroethoxy)methane	111-91-1	8270D	ND		1.0	0.13	ug/L	1
bis(2-Chloroethyl)ether	111-44-4	8270D	ND		1.0	0.13	ug/L	1
bis(2-Chloroisopropyl)ether	108-60-1	8270D	ND		1.0	0.082	ug/L	1
2-Chloronaphthalene	91-58-7	8270D	ND		1.0	0.12	ug/L	1
2-Chlorophenol	95-57-8	8270D	ND		1.0	0.13	ug/L	1
4-Chlorophenyl phenyl ether	7005-72-3	8270D	ND		1.0	0.11	ug/L	1
Chrysene	218-01-9	8270D	ND		1.0	0.12	ug/L	1
Dibenzo(a,h)anthracene	53-70-3	8270D	ND		1.0	0.13	ug/L	1
Dibenzofuran	132-64-9	8270D	ND		1.0	0.16	ug/L	1
3,3'-Dichlorobenzidine	91-94-1	8270D	ND		5.1	0.83	ug/L	1
2,4-Dichlorophenol	120-83-2	8270D	ND		1.0	0.15	ug/L	1
Diethylphthalate	84-66-2	8270D	ND		5.1	1.7	ug/L	1
Dimethyl phthalate	131-11-3	8270D	ND		5.1	1.7	ug/L	1
2,4-Dimethylphenol	105-67-9	8270D	ND		1.0	0.32	ug/L	1
Di-n-butyl phthalate	84-74-2	8270D	ND		5.1	1.7	ug/L	1
4,6-Dinitro-2-methylphenol	534-52-1	8270D	ND		5.1	1.5	ug/L	1
2,4-Dinitrophenol	51-28-5	8270D	ND		5.1	0.26	ug/L	1
2,4-Dinitrotoluene	121-14-2	8270D	ND		2.0	0.46	ug/L	1
2,6-Dinitrotoluene	606-20-2	8270D	ND		2.0	0.41	ug/L	1
Di-n-octylphthalate	117-84-0	8270D	ND		5.1	1.7	ug/L	1
bis(2-Ethylhexyl)phthalate	117-81-7	8270D	ND		5.1	1.7	ug/L	1
Fluoranthene	206-44-0	8270D	ND		1.0	0.21	ug/L	1
Fluorene	86-73-7	8270D	ND		1.0	0.10	ug/L	1
Hexachlorobenzene	118-74-1	8270D	ND		1.0	0.21	ug/L	1
Hexachlorobutadiene	87-68-3	8270D	ND		1.0	0.092	ug/L	1
Hexachlorocyclopentadiene	77-47-4	8270D	ND		5.1	0.23	ug/L	1

PQL = Practical quantitation limit
B = Detected in the method blank
E = Quantitation of compound exceeded the calibration range
ND = Not detected at or above the MDL
J = Estimated result < PQL and ≥ MDL
P = The RPD between two GC columns exceeds 40%
Where applicable, all soil sample analysis are reported on a dry weight basis unless flagged with a "W"
N = Recovery is out of criteria
H = Out of holding time

Semivolatile Organic Compounds by GC/MS

Client: ARCADIS U.S., Inc.
Laboratory ID: LD09018-012
Description: F39TW07 (20-25)
Matrix: Aqueous
Date Sampled: 04/08/2010 0845
Date Received: 04/09/2010

Run	Prep Method	Analytical Method	Dilution	Analysis Date	Analyst	Prep Date	Batch
1	3520C	8270D	1	04/15/2010 1517	JGH	04/11/2010 1745	31258

Parameter	CAS Number	Analytical Method	Result	Q	PQL	MDL	Units	Run
Hexachloroethane	67-72-1	8270D	ND		1.0	0.11	ug/L	1
Indeno(1,2,3-c,d)pyrene	193-39-5	8270D	ND		1.0	0.23	ug/L	1
Isophorone	78-59-1	8270D	ND		1.0	0.082	ug/L	1
2-Methylnaphthalene	91-57-6	8270D	ND		1.0	0.082	ug/L	1
2-Methylphenol	95-48-7	8270D	ND		1.0	0.17	ug/L	1
3 & 4-Methylphenol	106-44-5	8270D	ND		2.0	0.58	ug/L	1
Naphthalene	91-20-3	8270D	ND		1.0	0.071	ug/L	1
2-Nitroaniline	88-74-4	8270D	ND		2.0	0.56	ug/L	1
3-Nitroaniline	99-09-2	8270D	ND		2.0	0.79	ug/L	1
4-Nitroaniline	100-01-6	8270D	ND		2.0	0.40	ug/L	1
Nitrobenzene	98-95-3	8270D	ND		1.0	0.10	ug/L	1
2-Nitrophenol	88-75-5	8270D	ND		2.0	0.28	ug/L	1
4-Nitrophenol	100-02-7	8270D	ND		5.1	0.65	ug/L	1
N-Nitrosodi-n-propylamine	621-64-7	8270D	ND		1.0	0.082	ug/L	1
N-Nitrosodiphenylamine (Diphenylamine)	86-30-6	8270D	ND		1.0	0.39	ug/L	1
Pentachlorophenol	87-86-5	8270D	ND		5.1	0.55	ug/L	1
Phenanthrene	85-01-8	8270D	ND		1.0	0.18	ug/L	1
Phenol	108-95-2	8270D	ND		1.0	0.11	ug/L	1
Pyrene	129-00-0	8270D	ND		1.0	0.16	ug/L	1
2,4,5-Trichlorophenol	95-95-4	8270D	ND		1.0	0.18	ug/L	1
2,4,6-Trichlorophenol	88-06-2	8270D	ND		1.0	0.22	ug/L	1

Surrogate	Q	Run 1 % Recovery	Acceptance Limits
2-Fluorobiphenyl		62	37-129
2-Fluorophenol		52	24-127
Nitrobenzene-d5		61	38-127
Phenol-d5		58	28-128
Terphenyl-d14		11	10-148
2,4,6-Tribromophenol		93	41-144

PQL = Practical quantitation limit
B = Detected in the method blank
E = Quantitation of compound exceeded the calibration range
ND = Not detected at or above the MDL
J = Estimated result < PQL and ≥ MDL
P = The RPD between two GC columns exceeds 40%
Where applicable, all soil sample analysis are reported on a dry weight basis unless flagged with a "W"
N = Recovery is out of criteria
H = Out of holding time

Volatile Organic Compounds by GC/MS

Client: ARCADIS U.S., Inc.
Laboratory ID: LD09018-013
Description: F39TW07 (30-35)
Matrix: Aqueous
Date Sampled: 04/08/2010 0900
Date Received: 04/09/2010

Run	Prep Method	Analytical Method	Dilution	Analysis Date	Analyst	Prep Date	Batch
1	5030B	8260B	1	04/14/2010 0853	LBS		31466

Parameter	CAS Number	Analytical Method	Result	Q	PQL	MDL	Units	Run
Acetone	67-64-1	8260B	4.8	J	10	0.061	ug/L	1
Benzene	71-43-2	8260B	ND		0.50	0.027	ug/L	1
Bromodichloromethane	75-27-4	8260B	ND		0.50	0.17	ug/L	1
Bromoform	75-25-2	8260B	ND		0.50	0.010	ug/L	1
Bromomethane (Methyl bromide)	74-83-9	8260B	ND		0.50	0.20	ug/L	1
2-Butanone (MEK)	78-93-3	8260B	ND		10	2.0	ug/L	1
Carbon disulfide	75-15-0	8260B	0.70		0.50	0.097	ug/L	1
Carbon tetrachloride	56-23-5	8260B	ND		0.50	0.085	ug/L	1
Chlorobenzene	108-90-7	8260B	ND		0.50	0.17	ug/L	1
Chloroethane	75-00-3	8260B	ND		0.50	0.17	ug/L	1
Chloroform	67-66-3	8260B	ND		0.50	0.17	ug/L	1
Chloromethane (Methyl chloride)	74-87-3	8260B	0.19	J	0.50	0.17	ug/L	1
Cyclohexane	110-82-7	8260B	ND		0.50	0.30	ug/L	1
1,2-Dibromo-3-chloropropane (DBCP)	96-12-8	8260B	ND		0.50	0.069	ug/L	1
Dibromochloromethane	124-48-1	8260B	ND		0.50	0.17	ug/L	1
1,2-Dibromoethane (EDB)	106-93-4	8260B	ND		0.50	0.061	ug/L	1
1,3-Dichlorobenzene	541-73-1	8260B	ND		0.50	0.17	ug/L	1
1,2-Dichlorobenzene	95-50-1	8260B	ND		0.50	0.17	ug/L	1
1,4-Dichlorobenzene	106-46-7	8260B	ND		0.50	0.17	ug/L	1
Dichlorodifluoromethane	75-71-8	8260B	ND		0.50	0.071	ug/L	1
1,1-Dichloroethane	75-34-3	8260B	ND		0.50	0.054	ug/L	1
1,2-Dichloroethane	107-06-2	8260B	ND		0.50	0.023	ug/L	1
trans-1,2-Dichloroethene	156-60-5	8260B	ND		0.50	0.079	ug/L	1
1,1-Dichloroethene	75-35-4	8260B	ND		0.50	0.094	ug/L	1
cis-1,2-Dichloroethene	156-59-2	8260B	0.13	J	0.50	0.087	ug/L	1
1,2-Dichloropropane	78-87-5	8260B	ND		0.50	0.081	ug/L	1
trans-1,3-Dichloropropene	10061-02-6	8260B	ND		0.50	0.18	ug/L	1
cis-1,3-Dichloropropene	10061-01-5	8260B	ND		0.50	0.090	ug/L	1
Ethylbenzene	100-41-4	8260B	ND		0.50	0.17	ug/L	1
2-Hexanone	591-78-6	8260B	ND		10	0.27	ug/L	1
Isopropylbenzene	98-82-8	8260B	ND		0.50	0.029	ug/L	1
Methyl acetate	79-20-9	8260B	ND		1.0	0.30	ug/L	1
Methyl tertiary butyl ether (MTBE)	1634-04-4	8260B	ND		0.50	0.019	ug/L	1
4-Methyl-2-pentanone	108-10-1	8260B	ND		10	0.31	ug/L	1
Methylcyclohexane	108-87-2	8260B	ND		5.0	0.95	ug/L	1
Methylene chloride	75-09-2	8260B	0.23	BJ	0.50	0.17	ug/L	1
Styrene	100-42-5	8260B	ND		0.50	0.015	ug/L	1
1,1,2,2-Tetrachloroethane	79-34-5	8260B	ND		0.50	0.013	ug/L	1
Tetrachloroethene	127-18-4	8260B	0.98		0.50	0.014	ug/L	1
Toluene	108-88-3	8260B	ND		0.50	0.17	ug/L	1
1,1,2-Trichloro-1,2,2-Trifluoroethane	76-13-1	8260B	ND		0.50	0.30	ug/L	1
1,2,4-Trichlorobenzene	120-82-1	8260B	ND		0.50	0.17	ug/L	1
1,1,1-Trichloroethane	71-55-6	8260B	ND		0.50	0.029	ug/L	1
1,1,2-Trichloroethane	79-00-5	8260B	ND		0.50	0.031	ug/L	1

PQL = Practical quantitation limit
B = Detected in the method blank
E = Quantitation of compound exceeded the calibration range
ND = Not detected at or above the MDL
J = Estimated result < PQL and ≥ MDL
P = The RPD between two GC columns exceeds 40%
Where applicable, all soil sample analysis are reported on a dry weight basis unless flagged with a "W"
N = Recovery is out of criteria
H = Out of holding time

Volatile Organic Compounds by GC/MS

Client: ARCADIS U.S., Inc.
Laboratory ID: LD09018-013
Description: F39TW07 (30-35)
Matrix: Aqueous
Date Sampled: 04/08/2010 0900
Date Received: 04/09/2010

Run	Prep Method	Analytical Method	Dilution	Analysis Date	Analyst	Prep Date	Batch
1	5030B	8260B	1	04/14/2010 0853	LBS		31466

Parameter	CAS Number	Analytical Method	Result	Q	PQL	MDL	Units	Run
Trichloroethene	79-01-6	8260B	0.91		0.50	0.024	ug/L	1
Trichlorofluoromethane	75-69-4	8260B	ND		0.50	0.051	ug/L	1
Vinyl chloride	75-01-4	8260B	ND		0.50	0.065	ug/L	1
Xylenes (total)	1330-20-7	8260B	ND		0.50	0.17	ug/L	1

Surrogate	Q	Run 1 % Recovery	Acceptance Limits
1,2-Dichloroethane-d4		110	70-130
Bromofluorobenzene		95	70-130
Toluene-d8		107	70-130

PQL = Practical quantitation limit
B = Detected in the method blank
E = Quantitation of compound exceeded the calibration range
ND = Not detected at or above the MDL
J = Estimated result < PQL and ≥ MDL
P = The RPD between two GC columns exceeds 40%
Where applicable, all soil sample analysis are reported on a dry weight basis unless flagged with a "W"
N = Recovery is out of criteria
H = Out of holding time

Semivolatile Organic Compounds by GC/MS

Client: ARCADIS U.S., Inc.
Laboratory ID: LD09018-013
Description: F39TW07 (30-35)
Matrix: Aqueous
Date Sampled: 04/08/2010 0900
Date Received: 04/09/2010

Run	Prep Method	Analytical Method	Dilution	Analysis Date	Analyst	Prep Date	Batch
1	3520C	8270D	1	04/15/2010 1536	JGH	04/11/2010 1745	31258

Parameter	CAS Number	Analytical Method	Result	Q	PQL	MDL	Units	Run
Acenaphthene	83-32-9	8270D	ND		1.0	0.091	ug/L	1
Acenaphthylene	208-96-8	8270D	ND		1.0	0.16	ug/L	1
Acetophenone	98-86-2	8270D	ND		1.0	0.32	ug/L	1
Anthracene	120-12-7	8270D	ND		1.0	0.13	ug/L	1
Atrazine	1912-24-9	8270D	ND		1.0	0.20	ug/L	1
Benzaldehyde	100-52-7	8270D	ND		5.1	1.0	ug/L	1
Benzo(a)anthracene	56-55-3	8270D	ND		1.0	0.15	ug/L	1
Benzo(a)pyrene	50-32-8	8270D	ND		1.0	0.16	ug/L	1
Benzo(b)fluoranthene	205-99-2	8270D	ND		1.0	0.20	ug/L	1
Benzo(g,h,i)perylene	191-24-2	8270D	ND		1.0	0.23	ug/L	1
Benzo(k)fluoranthene	207-08-9	8270D	ND		1.0	0.12	ug/L	1
1,1'-Biphenyl	92-52-4	8270D	ND		1.0	0.20	ug/L	1
4-Bromophenyl phenyl ether	101-55-3	8270D	ND		1.0	0.12	ug/L	1
Butyl benzyl phthalate	85-68-7	8270D	ND		5.1	1.7	ug/L	1
Caprolactam	105-60-2	8270D	ND		5.1	1.2	ug/L	1
Carbazole	86-74-8	8270D	ND		1.0	0.25	ug/L	1
4-Chloro-3-methyl phenol	59-50-7	8270D	ND		1.0	0.22	ug/L	1
4-Chloroaniline	106-47-8	8270D	ND		1.0	0.13	ug/L	1
bis(2-Chloroethoxy)methane	111-91-1	8270D	ND		1.0	0.13	ug/L	1
bis(2-Chloroethyl)ether	111-44-4	8270D	ND		1.0	0.13	ug/L	1
bis(2-Chloroisopropyl)ether	108-60-1	8270D	ND		1.0	0.081	ug/L	1
2-Chloronaphthalene	91-58-7	8270D	ND		1.0	0.12	ug/L	1
2-Chlorophenol	95-57-8	8270D	ND		1.0	0.13	ug/L	1
4-Chlorophenyl phenyl ether	7005-72-3	8270D	ND		1.0	0.11	ug/L	1
Chrysene	218-01-9	8270D	ND		1.0	0.12	ug/L	1
Dibenzo(a,h)anthracene	53-70-3	8270D	ND		1.0	0.13	ug/L	1
Dibenzofuran	132-64-9	8270D	ND		1.0	0.16	ug/L	1
3,3'-Dichlorobenzidine	91-94-1	8270D	ND		5.1	0.82	ug/L	1
2,4-Dichlorophenol	120-83-2	8270D	ND		1.0	0.15	ug/L	1
Diethylphthalate	84-66-2	8270D	ND		5.1	1.7	ug/L	1
Dimethyl phthalate	131-11-3	8270D	ND		5.1	1.7	ug/L	1
2,4-Dimethylphenol	105-67-9	8270D	ND		1.0	0.31	ug/L	1
Di-n-butyl phthalate	84-74-2	8270D	ND		5.1	1.7	ug/L	1
4,6-Dinitro-2-methylphenol	534-52-1	8270D	ND		5.1	1.5	ug/L	1
2,4-Dinitrophenol	51-28-5	8270D	ND		5.1	0.25	ug/L	1
2,4-Dinitrotoluene	121-14-2	8270D	ND		2.0	0.45	ug/L	1
2,6-Dinitrotoluene	606-20-2	8270D	ND		2.0	0.40	ug/L	1
Di-n-octylphthalate	117-84-0	8270D	ND		5.1	1.7	ug/L	1
bis(2-Ethylhexyl)phthalate	117-81-7	8270D	ND		5.1	1.7	ug/L	1
Fluoranthene	206-44-0	8270D	ND		1.0	0.21	ug/L	1
Fluorene	86-73-7	8270D	ND		1.0	0.10	ug/L	1
Hexachlorobenzene	118-74-1	8270D	ND		1.0	0.21	ug/L	1
Hexachlorobutadiene	87-68-3	8270D	ND		1.0	0.091	ug/L	1
Hexachlorocyclopentadiene	77-47-4	8270D	ND		5.1	0.23	ug/L	1

PQL = Practical quantitation limit
B = Detected in the method blank
E = Quantitation of compound exceeded the calibration range
ND = Not detected at or above the MDL
J = Estimated result < PQL and ≥ MDL
P = The RPD between two GC columns exceeds 40%
Where applicable, all soil sample analysis are reported on a dry weight basis unless flagged with a "W"
N = Recovery is out of criteria
H = Out of holding time

Semivolatile Organic Compounds by GC/MS

Client: ARCADIS U.S., Inc.
Laboratory ID: LD09018-013
Description: F39TW07 (30-35)
Matrix: Aqueous
Date Sampled: 04/08/2010 0900
Date Received: 04/09/2010

Run	Prep Method	Analytical Method	Dilution	Analysis Date	Analyst	Prep Date	Batch
1	3520C	8270D	1	04/15/2010 1536	JGH	04/11/2010 1745	31258

Parameter	CAS Number	Analytical Method	Result	Q	PQL	MDL	Units	Run
Hexachloroethane	67-72-1	8270D	ND		1.0	0.11	ug/L	1
Indeno(1,2,3-c,d)pyrene	193-39-5	8270D	ND		1.0	0.23	ug/L	1
Isophorone	78-59-1	8270D	ND		1.0	0.081	ug/L	1
2-Methylnaphthalene	91-57-6	8270D	ND		1.0	0.081	ug/L	1
2-Methylphenol	95-48-7	8270D	ND		1.0	0.17	ug/L	1
3 & 4-Methylphenol	106-44-5	8270D	ND		2.0	0.58	ug/L	1
Naphthalene	91-20-3	8270D	ND		1.0	0.071	ug/L	1
2-Nitroaniline	88-74-4	8270D	ND		2.0	0.56	ug/L	1
3-Nitroaniline	99-09-2	8270D	ND		2.0	0.78	ug/L	1
4-Nitroaniline	100-01-6	8270D	ND		2.0	0.39	ug/L	1
Nitrobenzene	98-95-3	8270D	ND		1.0	0.10	ug/L	1
2-Nitrophenol	88-75-5	8270D	ND		2.0	0.27	ug/L	1
4-Nitrophenol	100-02-7	8270D	ND		5.1	0.65	ug/L	1
N-Nitrosodi-n-propylamine	621-64-7	8270D	ND		1.0	0.081	ug/L	1
N-Nitrosodiphenylamine (Diphenylamine)	86-30-6	8270D	ND		1.0	0.38	ug/L	1
Pentachlorophenol	87-86-5	8270D	ND		5.1	0.55	ug/L	1
Phenanthrene	85-01-8	8270D	ND		1.0	0.18	ug/L	1
Phenol	108-95-2	8270D	ND		1.0	0.11	ug/L	1
Pyrene	129-00-0	8270D	ND		1.0	0.16	ug/L	1
2,4,5-Trichlorophenol	95-95-4	8270D	ND		1.0	0.18	ug/L	1
2,4,6-Trichlorophenol	88-06-2	8270D	ND		1.0	0.22	ug/L	1

Surrogate	Q	Run 1 % Recovery	Acceptance Limits
2-Fluorobiphenyl		56	37-129
2-Fluorophenol		51	24-127
Nitrobenzene-d5		56	38-127
Phenol-d5		52	28-128
Terphenyl-d14		27	10-148
2,4,6-Tribromophenol		74	41-144

PQL = Practical quantitation limit
B = Detected in the method blank
E = Quantitation of compound exceeded the calibration range
ND = Not detected at or above the MDL
J = Estimated result < PQL and ≥ MDL
P = The RPD between two GC columns exceeds 40%
Where applicable, all soil sample analysis are reported on a dry weight basis unless flagged with a "W"
N = Recovery is out of criteria
H = Out of holding time

Volatile Organic Compounds by GC/MS

Client: ARCADIS U.S., Inc.
Laboratory ID: LD09018-014
Description: F39TW08 (20-25)
Matrix: Aqueous
Date Sampled: 04/08/2010 1100
Date Received: 04/09/2010

Run	Prep Method	Analytical Method	Dilution	Analysis Date	Analyst	Prep Date	Batch
1	5030B	8260B	1	04/14/2010 0915	LBS		31466

Parameter	CAS Number	Analytical Method	Result	Q	PQL	MDL	Units	Run
Acetone	67-64-1	8260B	6.6	J	10	0.061	ug/L	1
Benzene	71-43-2	8260B	0.32	J	0.50	0.027	ug/L	1
Bromodichloromethane	75-27-4	8260B	ND		0.50	0.17	ug/L	1
Bromoform	75-25-2	8260B	ND		0.50	0.010	ug/L	1
Bromomethane (Methyl bromide)	74-83-9	8260B	ND		0.50	0.20	ug/L	1
2-Butanone (MEK)	78-93-3	8260B	ND		10	2.0	ug/L	1
Carbon disulfide	75-15-0	8260B	0.16	J	0.50	0.097	ug/L	1
Carbon tetrachloride	56-23-5	8260B	ND		0.50	0.085	ug/L	1
Chlorobenzene	108-90-7	8260B	ND		0.50	0.17	ug/L	1
Chloroethane	75-00-3	8260B	ND		0.50	0.17	ug/L	1
Chloroform	67-66-3	8260B	ND		0.50	0.17	ug/L	1
Chloromethane (Methyl chloride)	74-87-3	8260B	0.20	J	0.50	0.17	ug/L	1
Cyclohexane	110-82-7	8260B	ND		0.50	0.30	ug/L	1
1,2-Dibromo-3-chloropropane (DBCP)	96-12-8	8260B	ND		0.50	0.069	ug/L	1
Dibromochloromethane	124-48-1	8260B	ND		0.50	0.17	ug/L	1
1,2-Dibromoethane (EDB)	106-93-4	8260B	ND		0.50	0.061	ug/L	1
1,3-Dichlorobenzene	541-73-1	8260B	ND		0.50	0.17	ug/L	1
1,2-Dichlorobenzene	95-50-1	8260B	ND		0.50	0.17	ug/L	1
1,4-Dichlorobenzene	106-46-7	8260B	ND		0.50	0.17	ug/L	1
Dichlorodifluoromethane	75-71-8	8260B	ND		0.50	0.071	ug/L	1
1,1-Dichloroethane	75-34-3	8260B	ND		0.50	0.054	ug/L	1
1,2-Dichloroethane	107-06-2	8260B	ND		0.50	0.023	ug/L	1
trans-1,2-Dichloroethene	156-60-5	8260B	ND		0.50	0.079	ug/L	1
1,1-Dichloroethene	75-35-4	8260B	ND		0.50	0.094	ug/L	1
cis-1,2-Dichloroethene	156-59-2	8260B	0.19	J	0.50	0.087	ug/L	1
1,2-Dichloropropane	78-87-5	8260B	ND		0.50	0.081	ug/L	1
trans-1,3-Dichloropropene	10061-02-6	8260B	ND		0.50	0.18	ug/L	1
cis-1,3-Dichloropropene	10061-01-5	8260B	ND		0.50	0.090	ug/L	1
Ethylbenzene	100-41-4	8260B	ND		0.50	0.17	ug/L	1
2-Hexanone	591-78-6	8260B	ND		10	0.27	ug/L	1
Isopropylbenzene	98-82-8	8260B	ND		0.50	0.029	ug/L	1
Methyl acetate	79-20-9	8260B	ND		1.0	0.30	ug/L	1
Methyl tertiary butyl ether (MTBE)	1634-04-4	8260B	ND		0.50	0.019	ug/L	1
4-Methyl-2-pentanone	108-10-1	8260B	ND		10	0.31	ug/L	1
Methylcyclohexane	108-87-2	8260B	ND		5.0	0.95	ug/L	1
Methylene chloride	75-09-2	8260B	ND		0.50	0.17	ug/L	1
Styrene	100-42-5	8260B	ND		0.50	0.015	ug/L	1
1,1,2,2-Tetrachloroethane	79-34-5	8260B	ND		0.50	0.013	ug/L	1
Tetrachloroethene	127-18-4	8260B	2.0		0.50	0.014	ug/L	1
Toluene	108-88-3	8260B	0.38	J	0.50	0.17	ug/L	1
1,1,2-Trichloro-1,2,2-Trifluoroethane	76-13-1	8260B	ND		0.50	0.30	ug/L	1
1,2,4-Trichlorobenzene	120-82-1	8260B	ND		0.50	0.17	ug/L	1
1,1,1-Trichloroethane	71-55-6	8260B	ND		0.50	0.029	ug/L	1
1,1,2-Trichloroethane	79-00-5	8260B	ND		0.50	0.031	ug/L	1

PQL = Practical quantitation limit
B = Detected in the method blank
E = Quantitation of compound exceeded the calibration range
ND = Not detected at or above the MDL
J = Estimated result < PQL and ≥ MDL
P = The RPD between two GC columns exceeds 40%
Where applicable, all soil sample analysis are reported on a dry weight basis unless flagged with a "W"
N = Recovery is out of criteria
H = Out of holding time

Volatile Organic Compounds by GC/MS

Client: ARCADIS U.S., Inc.
Laboratory ID: LD09018-014
Description: F39TW08 (20-25)
Matrix: Aqueous
Date Sampled: 04/08/2010 1100
Date Received: 04/09/2010

Run	Prep Method	Analytical Method	Dilution	Analysis Date	Analyst	Prep Date	Batch
1	5030B	8260B	1	04/14/2010 0915	LBS		31466

Parameter	CAS Number	Analytical Method	Result	Q	PQL	MDL	Units	Run
Trichloroethene	79-01-6	8260B	1.7		0.50	0.024	ug/L	1
Trichlorofluoromethane	75-69-4	8260B	ND		0.50	0.051	ug/L	1
Vinyl chloride	75-01-4	8260B	ND		0.50	0.065	ug/L	1
Xylenes (total)	1330-20-7	8260B	ND		0.50	0.17	ug/L	1

Surrogate	Q	Run 1 % Recovery	Acceptance Limits
1,2-Dichloroethane-d4		109	70-130
Bromofluorobenzene		94	70-130
Toluene-d8		107	70-130

PQL = Practical quantitation limit
B = Detected in the method blank
E = Quantitation of compound exceeded the calibration range
ND = Not detected at or above the MDL
J = Estimated result < PQL and ≥ MDL
P = The RPD between two GC columns exceeds 40%
Where applicable, all soil sample analysis are reported on a dry weight basis unless flagged with a "W"
N = Recovery is out of criteria
H = Out of holding time

Semivolatile Organic Compounds by GC/MS

Client: ARCADIS U.S., Inc.
Laboratory ID: LD09018-014
Description: F39TW08 (20-25)
Matrix: Aqueous
Date Sampled: 04/08/2010 1100
Date Received: 04/09/2010

Run	Prep Method	Analytical Method	Dilution	Analysis Date	Analyst	Prep Date	Batch
1	3520C	8270D	1	04/15/2010 1556	JGH	04/11/2010 1745	31258

Parameter	CAS Number	Analytical Method	Result	Q	PQL	MDL	Units	Run
Acenaphthene	83-32-9	8270D	ND		1.0	0.092	ug/L	1
Acenaphthylene	208-96-8	8270D	ND		1.0	0.16	ug/L	1
Acetophenone	98-86-2	8270D	ND		1.0	0.33	ug/L	1
Anthracene	120-12-7	8270D	ND		1.0	0.13	ug/L	1
Atrazine	1912-24-9	8270D	ND		1.0	0.20	ug/L	1
Benzaldehyde	100-52-7	8270D	ND		5.1	1.0	ug/L	1
Benzo(a)anthracene	56-55-3	8270D	ND		1.0	0.15	ug/L	1
Benzo(a)pyrene	50-32-8	8270D	ND		1.0	0.16	ug/L	1
Benzo(b)fluoranthene	205-99-2	8270D	ND		1.0	0.20	ug/L	1
Benzo(g,h,i)perylene	191-24-2	8270D	ND		1.0	0.23	ug/L	1
Benzo(k)fluoranthene	207-08-9	8270D	ND		1.0	0.12	ug/L	1
1,1'-Biphenyl	92-52-4	8270D	ND		1.0	0.20	ug/L	1
4-Bromophenyl phenyl ether	101-55-3	8270D	ND		1.0	0.12	ug/L	1
Butyl benzyl phthalate	85-68-7	8270D	ND		5.1	1.7	ug/L	1
Caprolactam	105-60-2	8270D	ND		5.1	1.2	ug/L	1
Carbazole	86-74-8	8270D	ND		1.0	0.26	ug/L	1
4-Chloro-3-methyl phenol	59-50-7	8270D	ND		1.0	0.22	ug/L	1
4-Chloroaniline	106-47-8	8270D	ND		1.0	0.13	ug/L	1
bis(2-Chloroethoxy)methane	111-91-1	8270D	ND		1.0	0.13	ug/L	1
bis(2-Chloroethyl)ether	111-44-4	8270D	ND		1.0	0.13	ug/L	1
bis(2-Chloroisopropyl)ether	108-60-1	8270D	ND		1.0	0.082	ug/L	1
2-Chloronaphthalene	91-58-7	8270D	ND		1.0	0.12	ug/L	1
2-Chlorophenol	95-57-8	8270D	ND		1.0	0.13	ug/L	1
4-Chlorophenyl phenyl ether	7005-72-3	8270D	ND		1.0	0.11	ug/L	1
Chrysene	218-01-9	8270D	ND		1.0	0.12	ug/L	1
Dibenzo(a,h)anthracene	53-70-3	8270D	ND		1.0	0.13	ug/L	1
Dibenzofuran	132-64-9	8270D	ND		1.0	0.16	ug/L	1
3,3'-Dichlorobenzidine	91-94-1	8270D	ND		5.1	0.83	ug/L	1
2,4-Dichlorophenol	120-83-2	8270D	ND		1.0	0.15	ug/L	1
Diethylphthalate	84-66-2	8270D	ND		5.1	1.7	ug/L	1
Dimethyl phthalate	131-11-3	8270D	ND		5.1	1.7	ug/L	1
2,4-Dimethylphenol	105-67-9	8270D	ND		1.0	0.32	ug/L	1
Di-n-butyl phthalate	84-74-2	8270D	ND		5.1	1.7	ug/L	1
4,6-Dinitro-2-methylphenol	534-52-1	8270D	ND		5.1	1.5	ug/L	1
2,4-Dinitrophenol	51-28-5	8270D	ND		5.1	0.26	ug/L	1
2,4-Dinitrotoluene	121-14-2	8270D	ND		2.0	0.46	ug/L	1
2,6-Dinitrotoluene	606-20-2	8270D	ND		2.0	0.41	ug/L	1
Di-n-octylphthalate	117-84-0	8270D	ND		5.1	1.7	ug/L	1
bis(2-Ethylhexyl)phthalate	117-81-7	8270D	ND		5.1	1.7	ug/L	1
Fluoranthene	206-44-0	8270D	ND		1.0	0.21	ug/L	1
Fluorene	86-73-7	8270D	ND		1.0	0.10	ug/L	1
Hexachlorobenzene	118-74-1	8270D	ND		1.0	0.21	ug/L	1
Hexachlorobutadiene	87-68-3	8270D	ND		1.0	0.092	ug/L	1
Hexachlorocyclopentadiene	77-47-4	8270D	ND		5.1	0.23	ug/L	1

PQL = Practical quantitation limit
B = Detected in the method blank
E = Quantitation of compound exceeded the calibration range
ND = Not detected at or above the MDL
J = Estimated result < PQL and ≥ MDL
P = The RPD between two GC columns exceeds 40%
Where applicable, all soil sample analysis are reported on a dry weight basis unless flagged with a "W"
N = Recovery is out of criteria
H = Out of holding time

Semivolatile Organic Compounds by GC/MS

Client: ARCADIS U.S., Inc.
Description: F39TW08 (20-25)
Date Sampled: 04/08/2010 1100
Date Received: 04/09/2010

Laboratory ID: LD09018-014
Matrix: Aqueous

Run	Prep Method	Analytical Method	Dilution	Analysis Date	Analyst	Prep Date	Batch
1	3520C	8270D	1	04/15/2010 1556	JGH	04/11/2010 1745	31258

Parameter	CAS Number	Analytical Method	Result	Q	PQL	MDL	Units	Run
Hexachloroethane	67-72-1	8270D	ND		1.0	0.11	ug/L	1
Indeno(1,2,3-c,d)pyrene	193-39-5	8270D	ND		1.0	0.23	ug/L	1
Isophorone	78-59-1	8270D	ND		1.0	0.082	ug/L	1
2-Methylnaphthalene	91-57-6	8270D	ND		1.0	0.082	ug/L	1
2-Methylphenol	95-48-7	8270D	ND		1.0	0.17	ug/L	1
3 & 4-Methylphenol	106-44-5	8270D	ND		2.0	0.58	ug/L	1
Naphthalene	91-20-3	8270D	ND		1.0	0.071	ug/L	1
2-Nitroaniline	88-74-4	8270D	ND		2.0	0.56	ug/L	1
3-Nitroaniline	99-09-2	8270D	ND		2.0	0.79	ug/L	1
4-Nitroaniline	100-01-6	8270D	ND		2.0	0.40	ug/L	1
Nitrobenzene	98-95-3	8270D	ND		1.0	0.10	ug/L	1
2-Nitrophenol	88-75-5	8270D	ND		2.0	0.28	ug/L	1
4-Nitrophenol	100-02-7	8270D	ND		5.1	0.65	ug/L	1
N-Nitrosodi-n-propylamine	621-64-7	8270D	ND		1.0	0.082	ug/L	1
N-Nitrosodiphenylamine (Diphenylamine)	86-30-6	8270D	ND		1.0	0.39	ug/L	1
Pentachlorophenol	87-86-5	8270D	ND		5.1	0.55	ug/L	1
Phenanthrene	85-01-8	8270D	ND		1.0	0.18	ug/L	1
Phenol	108-95-2	8270D	ND		1.0	0.11	ug/L	1
Pyrene	129-00-0	8270D	ND		1.0	0.16	ug/L	1
2,4,5-Trichlorophenol	95-95-4	8270D	ND		1.0	0.18	ug/L	1
2,4,6-Trichlorophenol	88-06-2	8270D	ND		1.0	0.22	ug/L	1

Surrogate	Q	Run 1 % Recovery	Acceptance Limits
2-Fluorobiphenyl		79	37-129
2-Fluorophenol		58	24-127
Nitrobenzene-d5		65	38-127
Phenol-d5		64	28-128
Terphenyl-d14		23	10-148
2,4,6-Tribromophenol		113	41-144

PQL = Practical quantitation limit
ND = Not detected at or above the MDL
Where applicable, all soil sample analysis are reported on a dry weight basis unless flagged with a "W"
B = Detected in the method blank
J = Estimated result < PQL and ≥ MDL
E = Quantitation of compound exceeded the calibration range
P = The RPD between two GC columns exceeds 40%
N = Recovery is out of criteria
H = Out of holding time

Volatile Organic Compounds by GC/MS

Client: ARCADIS U.S., Inc.
Laboratory ID: LD09018-015
Description: F39TW08 (30-35)
Matrix: Aqueous
Date Sampled: 04/08/2010 1120
Date Received: 04/09/2010

Run	Prep Method	Analytical Method	Dilution	Analysis Date	Analyst	Prep Date	Batch
1	5030B	8260B	1	04/14/2010 0937	LBS		31466

Parameter	CAS Number	Analytical Method	Result	Q	PQL	MDL	Units	Run
Acetone	67-64-1	8260B	8.3	J	10	0.061	ug/L	1
Benzene	71-43-2	8260B	0.14	J	0.50	0.027	ug/L	1
Bromodichloromethane	75-27-4	8260B	ND		0.50	0.17	ug/L	1
Bromoform	75-25-2	8260B	ND		0.50	0.010	ug/L	1
Bromomethane (Methyl bromide)	74-83-9	8260B	ND		0.50	0.20	ug/L	1
2-Butanone (MEK)	78-93-3	8260B	ND		10	2.0	ug/L	1
Carbon disulfide	75-15-0	8260B	0.80		0.50	0.097	ug/L	1
Carbon tetrachloride	56-23-5	8260B	ND		0.50	0.085	ug/L	1
Chlorobenzene	108-90-7	8260B	ND		0.50	0.17	ug/L	1
Chloroethane	75-00-3	8260B	ND		0.50	0.17	ug/L	1
Chloroform	67-66-3	8260B	ND		0.50	0.17	ug/L	1
Chloromethane (Methyl chloride)	74-87-3	8260B	0.18	J	0.50	0.17	ug/L	1
Cyclohexane	110-82-7	8260B	ND		0.50	0.30	ug/L	1
1,2-Dibromo-3-chloropropane (DBCP)	96-12-8	8260B	ND		0.50	0.069	ug/L	1
Dibromochloromethane	124-48-1	8260B	ND		0.50	0.17	ug/L	1
1,2-Dibromoethane (EDB)	106-93-4	8260B	ND		0.50	0.061	ug/L	1
1,3-Dichlorobenzene	541-73-1	8260B	ND		0.50	0.17	ug/L	1
1,2-Dichlorobenzene	95-50-1	8260B	ND		0.50	0.17	ug/L	1
1,4-Dichlorobenzene	106-46-7	8260B	ND		0.50	0.17	ug/L	1
Dichlorodifluoromethane	75-71-8	8260B	ND		0.50	0.071	ug/L	1
1,1-Dichloroethane	75-34-3	8260B	ND		0.50	0.054	ug/L	1
1,2-Dichloroethane	107-06-2	8260B	ND		0.50	0.023	ug/L	1
trans-1,2-Dichloroethene	156-60-5	8260B	ND		0.50	0.079	ug/L	1
1,1-Dichloroethene	75-35-4	8260B	ND		0.50	0.094	ug/L	1
cis-1,2-Dichloroethene	156-59-2	8260B	0.26	J	0.50	0.087	ug/L	1
1,2-Dichloropropane	78-87-5	8260B	ND		0.50	0.081	ug/L	1
trans-1,3-Dichloropropene	10061-02-6	8260B	ND		0.50	0.18	ug/L	1
cis-1,3-Dichloropropene	10061-01-5	8260B	ND		0.50	0.090	ug/L	1
Ethylbenzene	100-41-4	8260B	ND		0.50	0.17	ug/L	1
2-Hexanone	591-78-6	8260B	ND		10	0.27	ug/L	1
Isopropylbenzene	98-82-8	8260B	ND		0.50	0.029	ug/L	1
Methyl acetate	79-20-9	8260B	ND		1.0	0.30	ug/L	1
Methyl tertiary butyl ether (MTBE)	1634-04-4	8260B	ND		0.50	0.019	ug/L	1
4-Methyl-2-pentanone	108-10-1	8260B	ND		10	0.31	ug/L	1
Methylcyclohexane	108-87-2	8260B	ND		5.0	0.95	ug/L	1
Methylene chloride	75-09-2	8260B	0.22	BJ	0.50	0.17	ug/L	1
Styrene	100-42-5	8260B	ND		0.50	0.015	ug/L	1
1,1,2,2-Tetrachloroethane	79-34-5	8260B	ND		0.50	0.013	ug/L	1
Tetrachloroethene	127-18-4	8260B	ND		0.50	0.014	ug/L	1
Toluene	108-88-3	8260B	0.23	J	0.50	0.17	ug/L	1
1,1,2-Trichloro-1,2,2-Trifluoroethane	76-13-1	8260B	ND		0.50	0.30	ug/L	1
1,2,4-Trichlorobenzene	120-82-1	8260B	ND		0.50	0.17	ug/L	1
1,1,1-Trichloroethane	71-55-6	8260B	ND		0.50	0.029	ug/L	1
1,1,2-Trichloroethane	79-00-5	8260B	ND		0.50	0.031	ug/L	1

PQL = Practical quantitation limit
B = Detected in the method blank
E = Quantitation of compound exceeded the calibration range
ND = Not detected at or above the MDL
J = Estimated result < PQL and ≥ MDL
P = The RPD between two GC columns exceeds 40%
Where applicable, all soil sample analysis are reported on a dry weight basis unless flagged with a "W"
N = Recovery is out of criteria
H = Out of holding time

Volatile Organic Compounds by GC/MS

Client: ARCADIS U.S., Inc.
Laboratory ID: LD09018-015
Description: F39TW08 (30-35)
Matrix: Aqueous
Date Sampled: 04/08/2010 1120
Date Received: 04/09/2010

Run	Prep Method	Analytical Method	Dilution	Analysis Date	Analyst	Prep Date	Batch
1	5030B	8260B	1	04/14/2010 0937	LBS		31466

Parameter	CAS Number	Analytical Method	Result	Q	PQL	MDL	Units	Run
Trichloroethene	79-01-6	8260B	0.23	J	0.50	0.024	ug/L	1
Trichlorofluoromethane	75-69-4	8260B	ND		0.50	0.051	ug/L	1
Vinyl chloride	75-01-4	8260B	ND		0.50	0.065	ug/L	1
Xylenes (total)	1330-20-7	8260B	ND		0.50	0.17	ug/L	1

Surrogate	Q	Run 1 % Recovery	Acceptance Limits
1,2-Dichloroethane-d4		110	70-130
Bromofluorobenzene		95	70-130
Toluene-d8		107	70-130

PQL = Practical quantitation limit
B = Detected in the method blank
E = Quantitation of compound exceeded the calibration range
ND = Not detected at or above the MDL
J = Estimated result < PQL and ≥ MDL
P = The RPD between two GC columns exceeds 40%
Where applicable, all soil sample analysis are reported on a dry weight basis unless flagged with a "W"
N = Recovery is out of criteria
H = Out of holding time

Semivolatile Organic Compounds by GC/MS

Client: ARCADIS U.S., Inc.
Laboratory ID: LD09018-015
Description: F39TW08 (30-35)
Matrix: Aqueous
Date Sampled: 04/08/2010 1120
Date Received: 04/09/2010

Run	Prep Method	Analytical Method	Dilution	Analysis Date	Analyst	Prep Date	Batch
1	3520C	8270D	1	04/15/2010 1615	JGH	04/11/2010 1745	31258
2	3520C	8270D	1	04/22/2010 1820	WD	04/18/2010 1330	31716

Parameter	CAS Number	Analytical Method	Result	Q	PQL	MDL	Units	Run
Acenaphthene	83-32-9	8270D	ND		1.0	0.092	ug/L	1
Acenaphthylene	208-96-8	8270D	ND		1.0	0.16	ug/L	1
Acetophenone	98-86-2	8270D	ND		1.0	0.33	ug/L	1
Anthracene	120-12-7	8270D	ND		1.0	0.13	ug/L	1
Atrazine	1912-24-9	8270D	ND		1.0	0.20	ug/L	1
Benzaldehyde	100-52-7	8270D	ND		5.1	1.0	ug/L	1
Benzo(a)anthracene	56-55-3	8270D	ND		1.0	0.15	ug/L	1
Benzo(a)pyrene	50-32-8	8270D	ND		1.0	0.16	ug/L	1
Benzo(b)fluoranthene	205-99-2	8270D	ND		1.0	0.20	ug/L	1
Benzo(g,h,i)perylene	191-24-2	8270D	ND		1.0	0.23	ug/L	1
Benzo(k)fluoranthene	207-08-9	8270D	ND		1.0	0.12	ug/L	1
1,1'-Biphenyl	92-52-4	8270D	ND		1.0	0.20	ug/L	1
4-Bromophenyl phenyl ether	101-55-3	8270D	ND		1.0	0.12	ug/L	1
Butyl benzyl phthalate	85-68-7	8270D	ND		5.1	1.7	ug/L	1
Caprolactam	105-60-2	8270D	ND		5.1	1.2	ug/L	1
Carbazole	86-74-8	8270D	ND		1.0	0.26	ug/L	1
4-Chloro-3-methyl phenol	59-50-7	8270D	ND		1.0	0.22	ug/L	1
4-Chloroaniline	106-47-8	8270D	ND		1.0	0.13	ug/L	1
bis(2-Chloroethoxy)methane	111-91-1	8270D	ND		1.0	0.13	ug/L	1
bis(2-Chloroethyl)ether	111-44-4	8270D	ND		1.0	0.13	ug/L	1
bis(2-Chloroisopropyl)ether	108-60-1	8270D	ND		1.0	0.082	ug/L	1
2-Chloronaphthalene	91-58-7	8270D	ND		1.0	0.12	ug/L	1
2-Chlorophenol	95-57-8	8270D	ND		1.0	0.13	ug/L	1
4-Chlorophenyl phenyl ether	7005-72-3	8270D	ND		1.0	0.11	ug/L	1
Chrysene	218-01-9	8270D	ND		1.0	0.12	ug/L	1
Dibenzo(a,h)anthracene	53-70-3	8270D	ND		1.0	0.13	ug/L	1
Dibenzofuran	132-64-9	8270D	ND		1.0	0.16	ug/L	1
3,3'-Dichlorobenzidine	91-94-1	8270D	ND		5.1	0.83	ug/L	1
2,4-Dichlorophenol	120-83-2	8270D	ND		1.0	0.15	ug/L	1
Diethylphthalate	84-66-2	8270D	ND		5.1	1.7	ug/L	1
Dimethyl phthalate	131-11-3	8270D	ND		5.1	1.7	ug/L	1
2,4-Dimethylphenol	105-67-9	8270D	ND		1.0	0.32	ug/L	1
Di-n-butyl phthalate	84-74-2	8270D	ND		5.1	1.7	ug/L	1
4,6-Dinitro-2-methylphenol	534-52-1	8270D	ND		5.1	1.5	ug/L	1
2,4-Dinitrophenol	51-28-5	8270D	ND		5.1	0.26	ug/L	1
2,4-Dinitrotoluene	121-14-2	8270D	ND		2.0	0.46	ug/L	1
2,6-Dinitrotoluene	606-20-2	8270D	ND		2.0	0.41	ug/L	1
Di-n-octylphthalate	117-84-0	8270D	ND		5.1	1.7	ug/L	1
bis(2-Ethylhexyl)phthalate	117-81-7	8270D	ND		5.1	1.7	ug/L	1
Fluoranthene	206-44-0	8270D	ND		1.0	0.21	ug/L	1
Fluorene	86-73-7	8270D	ND		1.0	0.10	ug/L	1
Hexachlorobenzene	118-74-1	8270D	ND		1.0	0.21	ug/L	1
Hexachlorobutadiene	87-68-3	8270D	ND		1.0	0.092	ug/L	1

PQL = Practical quantitation limit
B = Detected in the method blank
E = Quantitation of compound exceeded the calibration range
ND = Not detected at or above the MDL
J = Estimated result < PQL and ≥ MDL
P = The RPD between two GC columns exceeds 40%
Where applicable, all soil sample analysis are reported on a dry weight basis unless flagged with a "W"
N = Recovery is out of criteria
H = Out of holding time

Semivolatile Organic Compounds by GC/MS

Client: ARCADIS U.S., Inc.
Laboratory ID: LD09018-015
Description: F39TW08 (30-35)
Matrix: Aqueous
Date Sampled: 04/08/2010 1120
Date Received: 04/09/2010

Run	Prep Method	Analytical Method	Dilution	Analysis Date	Analyst	Prep Date	Batch
1	3520C	8270D	1	04/15/2010 1615	JGH	04/11/2010 1745	31258
2	3520C	8270D	1	04/22/2010 1820	WD	04/18/2010 1330	31716

Parameter	CAS Number	Analytical Method	Result	Q	PQL	MDL	Units	Run
Hexachlorocyclopentadiene	77-47-4	8270D	ND		5.1	0.23	ug/L	1
Hexachloroethane	67-72-1	8270D	ND		1.0	0.11	ug/L	1
Indeno(1,2,3-c,d)pyrene	193-39-5	8270D	ND		1.0	0.23	ug/L	1
Isophorone	78-59-1	8270D	ND		1.0	0.082	ug/L	1
2-Methylnaphthalene	91-57-6	8270D	ND		1.0	0.082	ug/L	1
2-Methylphenol	95-48-7	8270D	1.3		1.0	0.17	ug/L	1
3 & 4-Methylphenol	106-44-5	8270D	1.2	J	2.0	0.58	ug/L	1
Naphthalene	91-20-3	8270D	ND		1.0	0.071	ug/L	1
2-Nitroaniline	88-74-4	8270D	ND		2.0	0.56	ug/L	1
3-Nitroaniline	99-09-2	8270D	ND		2.0	0.79	ug/L	1
4-Nitroaniline	100-01-6	8270D	ND		2.0	0.40	ug/L	1
Nitrobenzene	98-95-3	8270D	ND		1.0	0.10	ug/L	1
2-Nitrophenol	88-75-5	8270D	ND		2.0	0.28	ug/L	1
4-Nitrophenol	100-02-7	8270D	ND		5.1	0.65	ug/L	1
N-Nitrosodi-n-propylamine	621-64-7	8270D	ND		1.0	0.082	ug/L	1
N-Nitrosodiphenylamine (Diphenylamine)	86-30-6	8270D	ND		1.0	0.39	ug/L	1
Pentachlorophenol	87-86-5	8270D	ND		5.1	0.55	ug/L	1
Phenanthrene	85-01-8	8270D	ND		1.0	0.18	ug/L	1
Phenol	108-95-2	8270D	2.4		1.0	0.11	ug/L	1
Pyrene	129-00-0	8270D	ND		1.0	0.16	ug/L	1
2,4,5-Trichlorophenol	95-95-4	8270D	ND		1.0	0.18	ug/L	1
2,4,6-Trichlorophenol	88-06-2	8270D	ND		1.0	0.22	ug/L	1

Surrogate	Q	Run 1 % Recovery	Acceptance Limits	Q	Run 2 % Recovery	Acceptance Limits
2-Fluorobiphenyl		42	37-129	H	71	37-129
2-Fluorophenol		64	24-127	H	64	24-127
Nitrobenzene-d5	N	0.95	38-127	H	72	38-127
Phenol-d5		66	28-128	H	73	28-128
Terphenyl-d14	N	5.6	10-148	H	27	10-148
2,4,6-Tribromophenol		78	41-144	H	73	41-144

PQL = Practical quantitation limit
B = Detected in the method blank
E = Quantitation of compound exceeded the calibration range
ND = Not detected at or above the MDL
J = Estimated result < PQL and ≥ MDL
P = The RPD between two GC columns exceeds 40%
Where applicable, all soil sample analysis are reported on a dry weight basis unless flagged with a "W"
N = Recovery is out of criteria
H = Out of holding time

Semivolatile Organic Compounds by GC/MS

Client: ARCADIS U.S., Inc.
Laboratory ID: LD09018-015
Description: F39TW08 (30-35)
Matrix: Aqueous
Date Sampled: 04/08/2010 1120
Date Received: 04/09/2010

Run	Prep Method	Analytical Method	Dilution	Analysis Date	Analyst	Prep Date	Batch
1	3520C	8270D	1	04/15/2010 1615	JGH	04/11/2010 1745	31258
2	3520C	8270D	1	04/22/2010 1820	WD	04/18/2010 1330	31716

Parameter	CAS Number	Analytical Method	Result	Q	PQL	MDL	Units	Run
Acenaphthene	83-32-9	8270D	ND	H	10	0.90	ug/L	2
Acenaphthylene	208-96-8	8270D	ND	H	10	1.6	ug/L	2
Acetophenone	98-86-2	8270D	ND	H	10	3.2	ug/L	2
Anthracene	120-12-7	8270D	ND	H	10	1.3	ug/L	2
Atrazine	1912-24-9	8270D	ND	H	10	2.0	ug/L	2
Benzaldehyde	100-52-7	8270D	ND	H	50	10	ug/L	2
Benzo(a)anthracene	56-55-3	8270D	ND	H	10	1.5	ug/L	2
Benzo(a)pyrene	50-32-8	8270D	ND	H	10	1.6	ug/L	2
Benzo(b)fluoranthene	205-99-2	8270D	ND	H	10	2.0	ug/L	2
Benzo(g,h,i)perylene	191-24-2	8270D	ND	H	10	2.3	ug/L	2
Benzo(k)fluoranthene	207-08-9	8270D	ND	H	10	1.2	ug/L	2
1,1'-Biphenyl	92-52-4	8270D	ND	H	10	2.0	ug/L	2
4-Bromophenyl phenyl ether	101-55-3	8270D	ND	H	10	1.2	ug/L	2
Butyl benzyl phthalate	85-68-7	8270D	ND	H	50	17	ug/L	2
Caprolactam	105-60-2	8270D	ND	H	50	12	ug/L	2
Carbazole	86-74-8	8270D	ND	H	10	2.5	ug/L	2
4-Chloro-3-methyl phenol	59-50-7	8270D	ND	H	10	2.2	ug/L	2
4-Chloroaniline	106-47-8	8270D	ND	H	10	1.3	ug/L	2
bis(2-Chloroethoxy)methane	111-91-1	8270D	ND	H	10	1.3	ug/L	2
bis(2-Chloroethyl)ether	111-44-4	8270D	ND	H	10	1.3	ug/L	2
bis(2-Chloroisopropyl)ether	108-60-1	8270D	ND	H	10	0.80	ug/L	2
2-Chloronaphthalene	91-58-7	8270D	ND	H	10	1.2	ug/L	2
2-Chlorophenol	95-57-8	8270D	ND	H	10	1.3	ug/L	2
4-Chlorophenyl phenyl ether	7005-72-3	8270D	ND	H	10	1.1	ug/L	2
Chrysene	218-01-9	8270D	ND	H	10	1.2	ug/L	2
Dibenzo(a,h)anthracene	53-70-3	8270D	ND	H	10	1.3	ug/L	2
Dibenzofuran	132-64-9	8270D	ND	H	10	1.6	ug/L	2
3,3'-Dichlorobenzidine	91-94-1	8270D	ND	H	50	8.1	ug/L	2
2,4-Dichlorophenol	120-83-2	8270D	ND	H	10	1.5	ug/L	2
Diethylphthalate	84-66-2	8270D	ND	H	50	17	ug/L	2
Dimethyl phthalate	131-11-3	8270D	ND	H	50	17	ug/L	2
2,4-Dimethylphenol	105-67-9	8270D	ND	H	10	3.1	ug/L	2
Di-n-butyl phthalate	84-74-2	8270D	ND	H	50	17	ug/L	2
4,6-Dinitro-2-methylphenol	534-52-1	8270D	ND	H	50	15	ug/L	2
2,4-Dinitrophenol	51-28-5	8270D	ND	H	50	2.5	ug/L	2
2,4-Dinitrotoluene	121-14-2	8270D	ND	H	20	4.5	ug/L	2
2,6-Dinitrotoluene	606-20-2	8270D	ND	H	20	4.0	ug/L	2
Di-n-octylphthalate	117-84-0	8270D	ND	H	50	17	ug/L	2
bis(2-Ethylhexyl)phthalate	117-81-7	8270D	ND	H	50	17	ug/L	2
Fluoranthene	206-44-0	8270D	ND	H	10	2.1	ug/L	2
Fluorene	86-73-7	8270D	ND	H	10	1.0	ug/L	2
Hexachlorobenzene	118-74-1	8270D	ND	H	10	2.1	ug/L	2
Hexachlorobutadiene	87-68-3	8270D	ND	H	10	0.90	ug/L	2

PQL = Practical quantitation limit
B = Detected in the method blank
E = Quantitation of compound exceeded the calibration range
ND = Not detected at or above the MDL
J = Estimated result < PQL and ≥ MDL
P = The RPD between two GC columns exceeds 40%
Where applicable, all soil sample analysis are reported on a dry weight basis unless flagged with a "W"
N = Recovery is out of criteria
H = Out of holding time

Semivolatile Organic Compounds by GC/MS

Client: ARCADIS U.S., Inc.
Laboratory ID: LD09018-015
Description: F39TW08 (30-35)
Matrix: Aqueous
Date Sampled: 04/08/2010 1120
Date Received: 04/09/2010

Run	Prep Method	Analytical Method	Dilution	Analysis Date	Analyst	Prep Date	Batch
1	3520C	8270D	1	04/15/2010 1615	JGH	04/11/2010 1745	31258
2	3520C	8270D	1	04/22/2010 1820	WD	04/18/2010 1330	31716

Parameter	CAS Number	Analytical Method	Result	Q	PQL	MDL	Units	Run
Hexachlorocyclopentadiene	77-47-4	8270D	ND	H	50	2.3	ug/L	2
Hexachloroethane	67-72-1	8270D	ND	H	10	1.1	ug/L	2
Indeno(1,2,3-c,d)pyrene	193-39-5	8270D	ND	H	10	2.3	ug/L	2
Isophorone	78-59-1	8270D	ND	H	10	0.80	ug/L	2
2-Methylnaphthalene	91-57-6	8270D	ND	H	10	0.80	ug/L	2
2-Methylphenol	95-48-7	8270D	ND	H	10	1.7	ug/L	2
3 & 4-Methylphenol	106-44-5	8270D	ND	H	20	5.7	ug/L	2
Naphthalene	91-20-3	8270D	ND	H	10	0.70	ug/L	2
2-Nitroaniline	88-74-4	8270D	ND	H	20	5.5	ug/L	2
3-Nitroaniline	99-09-2	8270D	ND	H	20	7.7	ug/L	2
4-Nitroaniline	100-01-6	8270D	ND	H	20	3.9	ug/L	2
Nitrobenzene	98-95-3	8270D	ND	H	10	1.0	ug/L	2
2-Nitrophenol	88-75-5	8270D	ND	H	20	2.7	ug/L	2
4-Nitrophenol	100-02-7	8270D	ND	H	50	6.4	ug/L	2
N-Nitrosodi-n-propylamine	621-64-7	8270D	ND	H	10	0.80	ug/L	2
N-Nitrosodiphenylamine (Diphenylamine)	86-30-6	8270D	ND	H	10	3.8	ug/L	2
Pentachlorophenol	87-86-5	8270D	ND	H	50	5.4	ug/L	2
Phenanthrene	85-01-8	8270D	ND	H	10	1.8	ug/L	2
Phenol	108-95-2	8270D	ND	H	10	1.1	ug/L	2
Pyrene	129-00-0	8270D	ND	H	10	1.6	ug/L	2
2,4,5-Trichlorophenol	95-95-4	8270D	ND	H	10	1.8	ug/L	2
2,4,6-Trichlorophenol	88-06-2	8270D	ND	H	10	2.2	ug/L	2

Surrogate	Q	Run 1 % Recovery	Acceptance Limits	Q	Run 2 % Recovery	Acceptance Limits
2-Fluorobiphenyl		42	37-129	H	71	37-129
2-Fluorophenol		64	24-127	H	64	24-127
Nitrobenzene-d5	N	0.95	38-127	H	72	38-127
Phenol-d5		66	28-128	H	73	28-128
Terphenyl-d14	N	5.6	10-148	H	27	10-148
2,4,6-Tribromophenol		78	41-144	H	73	41-144

PQL = Practical quantitation limit
B = Detected in the method blank
E = Quantitation of compound exceeded the calibration range
ND = Not detected at or above the MDL
J = Estimated result < PQL and ≥ MDL
P = The RPD between two GC columns exceeds 40%
Where applicable, all soil sample analysis are reported on a dry weight basis unless flagged with a "W"
N = Recovery is out of criteria
H = Out of holding time

Volatile Organic Compounds by GC/MS

Client: ARCADIS U.S., Inc.
Laboratory ID: LD09018-016
Description: TRIP BLANK
Matrix: Aqueous
Date Sampled: 04/09/2010 0830
Date Received: 04/09/2010

Run	Prep Method	Analytical Method	Dilution	Analysis Date	Analyst	Prep Date	Batch
1	5030B	8260B	1	04/14/2010 0958	LBS		31466

Parameter	CAS Number	Analytical Method	Result	Q	PQL	MDL	Units	Run
Acetone	67-64-1	8260B	ND		10	0.061	ug/L	1
Benzene	71-43-2	8260B	ND		0.50	0.027	ug/L	1
Bromodichloromethane	75-27-4	8260B	ND		0.50	0.17	ug/L	1
Bromoform	75-25-2	8260B	ND		0.50	0.010	ug/L	1
Bromomethane (Methyl bromide)	74-83-9	8260B	ND		0.50	0.20	ug/L	1
2-Butanone (MEK)	78-93-3	8260B	ND		10	2.0	ug/L	1
Carbon disulfide	75-15-0	8260B	ND		0.50	0.097	ug/L	1
Carbon tetrachloride	56-23-5	8260B	ND		0.50	0.085	ug/L	1
Chlorobenzene	108-90-7	8260B	ND		0.50	0.17	ug/L	1
Chloroethane	75-00-3	8260B	ND		0.50	0.17	ug/L	1
Chloroform	67-66-3	8260B	ND		0.50	0.17	ug/L	1
Chloromethane (Methyl chloride)	74-87-3	8260B	ND		0.50	0.17	ug/L	1
Cyclohexane	110-82-7	8260B	ND		0.50	0.30	ug/L	1
1,2-Dibromo-3-chloropropane (DBCP)	96-12-8	8260B	ND		0.50	0.069	ug/L	1
Dibromochloromethane	124-48-1	8260B	ND		0.50	0.17	ug/L	1
1,2-Dibromoethane (EDB)	106-93-4	8260B	ND		0.50	0.061	ug/L	1
1,3-Dichlorobenzene	541-73-1	8260B	ND		0.50	0.17	ug/L	1
1,2-Dichlorobenzene	95-50-1	8260B	ND		0.50	0.17	ug/L	1
1,4-Dichlorobenzene	106-46-7	8260B	ND		0.50	0.17	ug/L	1
Dichlorodifluoromethane	75-71-8	8260B	ND		0.50	0.071	ug/L	1
1,1-Dichloroethane	75-34-3	8260B	ND		0.50	0.054	ug/L	1
1,2-Dichloroethane	107-06-2	8260B	ND		0.50	0.023	ug/L	1
trans-1,2-Dichloroethene	156-60-5	8260B	ND		0.50	0.079	ug/L	1
1,1-Dichloroethene	75-35-4	8260B	ND		0.50	0.094	ug/L	1
cis-1,2-Dichloroethene	156-59-2	8260B	ND		0.50	0.087	ug/L	1
1,2-Dichloropropane	78-87-5	8260B	ND		0.50	0.081	ug/L	1
trans-1,3-Dichloropropene	10061-02-6	8260B	ND		0.50	0.18	ug/L	1
cis-1,3-Dichloropropene	10061-01-5	8260B	ND		0.50	0.090	ug/L	1
Ethylbenzene	100-41-4	8260B	ND		0.50	0.17	ug/L	1
2-Hexanone	591-78-6	8260B	ND		10	0.27	ug/L	1
Isopropylbenzene	98-82-8	8260B	ND		0.50	0.029	ug/L	1
Methyl acetate	79-20-9	8260B	ND		1.0	0.30	ug/L	1
Methyl tertiary butyl ether (MTBE)	1634-04-4	8260B	ND		0.50	0.019	ug/L	1
4-Methyl-2-pentanone	108-10-1	8260B	ND		10	0.31	ug/L	1
Methylcyclohexane	108-87-2	8260B	ND		5.0	0.95	ug/L	1
Methylene chloride	75-09-2	8260B	0.24	BJ	0.50	0.17	ug/L	1
Styrene	100-42-5	8260B	ND		0.50	0.015	ug/L	1
1,1,2,2-Tetrachloroethane	79-34-5	8260B	ND		0.50	0.013	ug/L	1
Tetrachloroethene	127-18-4	8260B	ND		0.50	0.014	ug/L	1
Toluene	108-88-3	8260B	ND		0.50	0.17	ug/L	1
1,1,2-Trichloro-1,2,2-Trifluoroethane	76-13-1	8260B	ND		0.50	0.30	ug/L	1
1,2,4-Trichlorobenzene	120-82-1	8260B	ND		0.50	0.17	ug/L	1
1,1,1-Trichloroethane	71-55-6	8260B	ND		0.50	0.029	ug/L	1
1,1,2-Trichloroethane	79-00-5	8260B	ND		0.50	0.031	ug/L	1

PQL = Practical quantitation limit
B = Detected in the method blank
E = Quantitation of compound exceeded the calibration range
ND = Not detected at or above the MDL
J = Estimated result < PQL and ≥ MDL
P = The RPD between two GC columns exceeds 40%
Where applicable, all soil sample analysis are reported on a dry weight basis unless flagged with a "W"
N = Recovery is out of criteria
H = Out of holding time

Volatile Organic Compounds by GC/MS

Client: ARCADIS U.S., Inc.
Laboratory ID: LD09018-016
Description: TRIP BLANK
Matrix: Aqueous
Date Sampled: 04/09/2010 0830
Date Received: 04/09/2010

Run	Prep Method	Analytical Method	Dilution	Analysis Date	Analyst	Prep Date	Batch
1	5030B	8260B	1	04/14/2010 0958	LBS		31466

Parameter	CAS Number	Analytical Method	Result	Q	PQL	MDL	Units	Run
Trichloroethene	79-01-6	8260B	ND		0.50	0.024	ug/L	1
Trichlorofluoromethane	75-69-4	8260B	ND		0.50	0.051	ug/L	1
Vinyl chloride	75-01-4	8260B	ND		0.50	0.065	ug/L	1
Xylenes (total)	1330-20-7	8260B	ND		0.50	0.17	ug/L	1

Surrogate	Q	Run 1 % Recovery	Acceptance Limits
1,2-Dichloroethane-d4		110	70-130
Bromofluorobenzene		93	70-130
Toluene-d8		107	70-130

PQL = Practical quantitation limit
B = Detected in the method blank
E = Quantitation of compound exceeded the calibration range
ND = Not detected at or above the MDL
J = Estimated result < PQL and ≥ MDL
P = The RPD between two GC columns exceeds 40%
Where applicable, all soil sample analysis are reported on a dry weight basis unless flagged with a "W"
N = Recovery is out of criteria
H = Out of holding time

Volatile Organic Compounds by GC/MS

Client: ARCADIS U.S., Inc.
Laboratory ID: LD09018-017
Description: F39TW08 (10-15)
Matrix: Aqueous
Date Sampled: 04/08/2010 1420
Date Received: 04/10/2010

Run	Prep Method	Analytical Method	Dilution	Analysis Date	Analyst	Prep Date	Batch
1	5030B	8260B	1	04/14/2010 1020	LBS		31466

Parameter	CAS Number	Analytical Method	Result	Q	PQL	MDL	Units	Run
Acetone	67-64-1	8260B	6.0	J	10	0.061	ug/L	1
Benzene	71-43-2	8260B	0.14	J	0.50	0.027	ug/L	1
Bromodichloromethane	75-27-4	8260B	ND		0.50	0.17	ug/L	1
Bromoform	75-25-2	8260B	ND		0.50	0.010	ug/L	1
Bromomethane (Methyl bromide)	74-83-9	8260B	ND		0.50	0.20	ug/L	1
2-Butanone (MEK)	78-93-3	8260B	ND		10	2.0	ug/L	1
Carbon disulfide	75-15-0	8260B	0.37	J	0.50	0.097	ug/L	1
Carbon tetrachloride	56-23-5	8260B	ND		0.50	0.085	ug/L	1
Chlorobenzene	108-90-7	8260B	ND		0.50	0.17	ug/L	1
Chloroethane	75-00-3	8260B	ND		0.50	0.17	ug/L	1
Chloroform	67-66-3	8260B	ND		0.50	0.17	ug/L	1
Chloromethane (Methyl chloride)	74-87-3	8260B	0.27	J	0.50	0.17	ug/L	1
Cyclohexane	110-82-7	8260B	ND		0.50	0.30	ug/L	1
1,2-Dibromo-3-chloropropane (DBCP)	96-12-8	8260B	ND		0.50	0.069	ug/L	1
Dibromochloromethane	124-48-1	8260B	ND		0.50	0.17	ug/L	1
1,2-Dibromoethane (EDB)	106-93-4	8260B	ND		0.50	0.061	ug/L	1
1,3-Dichlorobenzene	541-73-1	8260B	ND		0.50	0.17	ug/L	1
1,2-Dichlorobenzene	95-50-1	8260B	ND		0.50	0.17	ug/L	1
1,4-Dichlorobenzene	106-46-7	8260B	ND		0.50	0.17	ug/L	1
Dichlorodifluoromethane	75-71-8	8260B	ND		0.50	0.071	ug/L	1
1,1-Dichloroethane	75-34-3	8260B	ND		0.50	0.054	ug/L	1
1,2-Dichloroethane	107-06-2	8260B	ND		0.50	0.023	ug/L	1
trans-1,2-Dichloroethene	156-60-5	8260B	ND		0.50	0.079	ug/L	1
1,1-Dichloroethene	75-35-4	8260B	ND		0.50	0.094	ug/L	1
cis-1,2-Dichloroethene	156-59-2	8260B	ND		0.50	0.087	ug/L	1
1,2-Dichloropropane	78-87-5	8260B	ND		0.50	0.081	ug/L	1
trans-1,3-Dichloropropene	10061-02-6	8260B	ND		0.50	0.18	ug/L	1
cis-1,3-Dichloropropene	10061-01-5	8260B	ND		0.50	0.090	ug/L	1
Ethylbenzene	100-41-4	8260B	ND		0.50	0.17	ug/L	1
2-Hexanone	591-78-6	8260B	ND		10	0.27	ug/L	1
Isopropylbenzene	98-82-8	8260B	ND		0.50	0.029	ug/L	1
Methyl acetate	79-20-9	8260B	ND		1.0	0.30	ug/L	1
Methyl tertiary butyl ether (MTBE)	1634-04-4	8260B	ND		0.50	0.019	ug/L	1
4-Methyl-2-pentanone	108-10-1	8260B	ND		10	0.31	ug/L	1
Methylcyclohexane	108-87-2	8260B	ND		5.0	0.95	ug/L	1
Methylene chloride	75-09-2	8260B	0.23	BJ	0.50	0.17	ug/L	1
Styrene	100-42-5	8260B	ND		0.50	0.015	ug/L	1
1,1,2,2-Tetrachloroethane	79-34-5	8260B	ND		0.50	0.013	ug/L	1
Tetrachloroethene	127-18-4	8260B	0.13	J	0.50	0.014	ug/L	1
Toluene	108-88-3	8260B	0.17	J	0.50	0.17	ug/L	1
1,1,2-Trichloro-1,2,2-Trifluoroethane	76-13-1	8260B	ND		0.50	0.30	ug/L	1
1,2,4-Trichlorobenzene	120-82-1	8260B	ND		0.50	0.17	ug/L	1
1,1,1-Trichloroethane	71-55-6	8260B	ND		0.50	0.029	ug/L	1
1,1,2-Trichloroethane	79-00-5	8260B	ND		0.50	0.031	ug/L	1

PQL = Practical quantitation limit
B = Detected in the method blank
E = Quantitation of compound exceeded the calibration range
ND = Not detected at or above the MDL
J = Estimated result < PQL and ≥ MDL
P = The RPD between two GC columns exceeds 40%
Where applicable, all soil sample analysis are reported on a dry weight basis unless flagged with a "W"
N = Recovery is out of criteria
H = Out of holding time

Volatile Organic Compounds by GC/MS

Client: ARCADIS U.S., Inc.
Laboratory ID: LD09018-017
Description: F39TW08 (10-15)
Matrix: Aqueous
Date Sampled: 04/08/2010 1420
Date Received: 04/10/2010

Run	Prep Method	Analytical Method	Dilution	Analysis Date	Analyst	Prep Date	Batch
1	5030B	8260B	1	04/14/2010 1020	LBS		31466

Parameter	CAS Number	Analytical Method	Result	Q	PQL	MDL	Units	Run
Trichloroethene	79-01-6	8260B	1.9		0.50	0.024	ug/L	1
Trichlorofluoromethane	75-69-4	8260B	ND		0.50	0.051	ug/L	1
Vinyl chloride	75-01-4	8260B	ND		0.50	0.065	ug/L	1
Xylenes (total)	1330-20-7	8260B	ND		0.50	0.17	ug/L	1

Surrogate	Q	Run 1 % Recovery	Acceptance Limits
1,2-Dichloroethane-d4		112	70-130
Bromofluorobenzene		96	70-130
Toluene-d8		108	70-130

PQL = Practical quantitation limit
B = Detected in the method blank
E = Quantitation of compound exceeded the calibration range
ND = Not detected at or above the MDL
J = Estimated result < PQL and ≥ MDL
P = The RPD between two GC columns exceeds 40%
Where applicable, all soil sample analysis are reported on a dry weight basis unless flagged with a "W"
N = Recovery is out of criteria
H = Out of holding time

Semivolatile Organic Compounds by GC/MS

Client: ARCADIS U.S., Inc.
Laboratory ID: LD09018-017
Description: F39TW08 (10-15)
Matrix: Aqueous
Date Sampled: 04/08/2010 1420
Date Received: 04/10/2010

Run	Prep Method	Analytical Method	Dilution	Analysis Date	Analyst	Prep Date	Batch
1	3520C	8270D	1	04/14/2010 1532	JGH	04/13/2010 0021	31326

Parameter	CAS Number	Analytical Method	Result	Q	PQL	MDL	Units	Run
Acenaphthene	83-32-9	8270D	ND		1.0	0.092	ug/L	1
Acenaphthylene	208-96-8	8270D	ND		1.0	0.16	ug/L	1
Acetophenone	98-86-2	8270D	ND		1.0	0.33	ug/L	1
Anthracene	120-12-7	8270D	ND		1.0	0.13	ug/L	1
Atrazine	1912-24-9	8270D	ND		1.0	0.20	ug/L	1
Benzaldehyde	100-52-7	8270D	ND		5.1	1.0	ug/L	1
Benzo(a)anthracene	56-55-3	8270D	ND		1.0	0.15	ug/L	1
Benzo(a)pyrene	50-32-8	8270D	ND		1.0	0.16	ug/L	1
Benzo(b)fluoranthene	205-99-2	8270D	ND		1.0	0.20	ug/L	1
Benzo(g,h,i)perylene	191-24-2	8270D	ND		1.0	0.23	ug/L	1
Benzo(k)fluoranthene	207-08-9	8270D	ND		1.0	0.12	ug/L	1
1,1'-Biphenyl	92-52-4	8270D	ND		1.0	0.20	ug/L	1
4-Bromophenyl phenyl ether	101-55-3	8270D	ND		1.0	0.12	ug/L	1
Butyl benzyl phthalate	85-68-7	8270D	ND		5.1	1.7	ug/L	1
Caprolactam	105-60-2	8270D	ND		5.1	1.2	ug/L	1
Carbazole	86-74-8	8270D	ND		1.0	0.26	ug/L	1
4-Chloro-3-methyl phenol	59-50-7	8270D	ND		1.0	0.22	ug/L	1
4-Chloroaniline	106-47-8	8270D	ND		1.0	0.13	ug/L	1
bis(2-Chloroethoxy)methane	111-91-1	8270D	ND		1.0	0.13	ug/L	1
bis(2-Chloroethyl)ether	111-44-4	8270D	ND		1.0	0.13	ug/L	1
bis(2-Chloroisopropyl)ether	108-60-1	8270D	ND		1.0	0.082	ug/L	1
2-Chloronaphthalene	91-58-7	8270D	ND		1.0	0.12	ug/L	1
2-Chlorophenol	95-57-8	8270D	ND		1.0	0.13	ug/L	1
4-Chlorophenyl phenyl ether	7005-72-3	8270D	ND		1.0	0.11	ug/L	1
Chrysene	218-01-9	8270D	ND		1.0	0.12	ug/L	1
Dibenzo(a,h)anthracene	53-70-3	8270D	ND		1.0	0.13	ug/L	1
Dibenzofuran	132-64-9	8270D	ND		1.0	0.16	ug/L	1
3,3'-Dichlorobenzidine	91-94-1	8270D	ND		5.1	0.83	ug/L	1
2,4-Dichlorophenol	120-83-2	8270D	ND		1.0	0.15	ug/L	1
Diethylphthalate	84-66-2	8270D	ND		5.1	1.7	ug/L	1
Dimethyl phthalate	131-11-3	8270D	ND		5.1	1.7	ug/L	1
2,4-Dimethylphenol	105-67-9	8270D	ND		1.0	0.32	ug/L	1
Di-n-butyl phthalate	84-74-2	8270D	ND		5.1	1.7	ug/L	1
4,6-Dinitro-2-methylphenol	534-52-1	8270D	ND		5.1	1.5	ug/L	1
2,4-Dinitrophenol	51-28-5	8270D	ND		5.1	0.26	ug/L	1
2,4-Dinitrotoluene	121-14-2	8270D	ND		2.0	0.46	ug/L	1
2,6-Dinitrotoluene	606-20-2	8270D	ND		2.0	0.41	ug/L	1
Di-n-octylphthalate	117-84-0	8270D	ND		5.1	1.7	ug/L	1
bis(2-Ethylhexyl)phthalate	117-81-7	8270D	ND		5.1	1.7	ug/L	1
Fluoranthene	206-44-0	8270D	ND		1.0	0.21	ug/L	1
Fluorene	86-73-7	8270D	ND		1.0	0.10	ug/L	1
Hexachlorobenzene	118-74-1	8270D	ND		1.0	0.21	ug/L	1
Hexachlorobutadiene	87-68-3	8270D	ND		1.0	0.092	ug/L	1
Hexachlorocyclopentadiene	77-47-4	8270D	ND		5.1	0.23	ug/L	1

PQL = Practical quantitation limit
B = Detected in the method blank
E = Quantitation of compound exceeded the calibration range
ND = Not detected at or above the MDL
J = Estimated result < PQL and ≥ MDL
P = The RPD between two GC columns exceeds 40%
Where applicable, all soil sample analysis are reported on a dry weight basis unless flagged with a "W"
N = Recovery is out of criteria
H = Out of holding time

Semivolatile Organic Compounds by GC/MS

Client: ARCADIS U.S., Inc.
Laboratory ID: LD09018-017
Description: F39TW08 (10-15)
Matrix: Aqueous
Date Sampled: 04/08/2010 1420
Date Received: 04/10/2010

Run	Prep Method	Analytical Method	Dilution	Analysis Date	Analyst	Prep Date	Batch
1	3520C	8270D	1	04/14/2010 1532	JGH	04/13/2010 0021	31326

Parameter	CAS Number	Analytical Method	Result	Q	PQL	MDL	Units	Run
Hexachloroethane	67-72-1	8270D	ND		1.0	0.11	ug/L	1
Indeno(1,2,3-c,d)pyrene	193-39-5	8270D	ND		1.0	0.23	ug/L	1
Isophorone	78-59-1	8270D	ND		1.0	0.082	ug/L	1
2-Methylnaphthalene	91-57-6	8270D	ND		1.0	0.082	ug/L	1
2-Methylphenol	95-48-7	8270D	ND		1.0	0.17	ug/L	1
3 & 4-Methylphenol	106-44-5	8270D	ND		2.0	0.58	ug/L	1
Naphthalene	91-20-3	8270D	ND		1.0	0.071	ug/L	1
2-Nitroaniline	88-74-4	8270D	ND		2.0	0.56	ug/L	1
3-Nitroaniline	99-09-2	8270D	ND		2.0	0.79	ug/L	1
4-Nitroaniline	100-01-6	8270D	ND		2.0	0.40	ug/L	1
Nitrobenzene	98-95-3	8270D	ND		1.0	0.10	ug/L	1
2-Nitrophenol	88-75-5	8270D	ND		2.0	0.28	ug/L	1
4-Nitrophenol	100-02-7	8270D	ND		5.1	0.65	ug/L	1
N-Nitrosodi-n-propylamine	621-64-7	8270D	ND		1.0	0.082	ug/L	1
N-Nitrosodiphenylamine (Diphenylamine)	86-30-6	8270D	ND		1.0	0.39	ug/L	1
Pentachlorophenol	87-86-5	8270D	ND		5.1	0.55	ug/L	1
Phenanthrene	85-01-8	8270D	ND		1.0	0.18	ug/L	1
Phenol	108-95-2	8270D	ND		1.0	0.11	ug/L	1
Pyrene	129-00-0	8270D	ND		1.0	0.16	ug/L	1
2,4,5-Trichlorophenol	95-95-4	8270D	ND		1.0	0.18	ug/L	1
2,4,6-Trichlorophenol	88-06-2	8270D	ND		1.0	0.22	ug/L	1

Surrogate	Q	Run 1 % Recovery	Acceptance Limits
2-Fluorobiphenyl		77	37-129
2-Fluorophenol		63	24-127
Nitrobenzene-d5		84	38-127
Phenol-d5		69	28-128
Terphenyl-d14		18	10-148
2,4,6-Tribromophenol		96	41-144

PQL = Practical quantitation limit
B = Detected in the method blank
E = Quantitation of compound exceeded the calibration range
ND = Not detected at or above the MDL
J = Estimated result < PQL and ≥ MDL
P = The RPD between two GC columns exceeds 40%
Where applicable, all soil sample analysis are reported on a dry weight basis unless flagged with a "W"
N = Recovery is out of criteria
H = Out of holding time

Volatile Organic Compounds by GC/MS

Client: ARCADIS U.S., Inc.
Laboratory ID: LD09018-018
Description: F39TW08 (40-45)
Matrix: Aqueous
Date Sampled: 04/08/2010 1440
Date Received: 04/10/2010

Run	Prep Method	Analytical Method	Dilution	Analysis Date	Analyst	Prep Date	Batch
1	5030B	8260B	2	04/14/2010 2122	LBS		31526

Parameter	CAS Number	Analytical Method	Result	Q	PQL	MDL	Units	Run
Acetone	67-64-1	8260B	6.1	J	20	0.12	ug/L	1
Benzene	71-43-2	8260B	ND		1.0	0.054	ug/L	1
Bromodichloromethane	75-27-4	8260B	ND		1.0	0.34	ug/L	1
Bromoform	75-25-2	8260B	ND		1.0	0.020	ug/L	1
Bromomethane (Methyl bromide)	74-83-9	8260B	ND		1.0	0.41	ug/L	1
2-Butanone (MEK)	78-93-3	8260B	ND		20	4.1	ug/L	1
Carbon disulfide	75-15-0	8260B	0.23	J	1.0	0.19	ug/L	1
Carbon tetrachloride	56-23-5	8260B	ND		1.0	0.17	ug/L	1
Chlorobenzene	108-90-7	8260B	ND		1.0	0.34	ug/L	1
Chloroethane	75-00-3	8260B	ND		1.0	0.34	ug/L	1
Chloroform	67-66-3	8260B	ND		1.0	0.34	ug/L	1
Chloromethane (Methyl chloride)	74-87-3	8260B	ND		1.0	0.35	ug/L	1
Cyclohexane	110-82-7	8260B	ND		1.0	0.60	ug/L	1
1,2-Dibromo-3-chloropropane (DBCP)	96-12-8	8260B	ND		1.0	0.14	ug/L	1
Dibromochloromethane	124-48-1	8260B	ND		1.0	0.34	ug/L	1
1,2-Dibromoethane (EDB)	106-93-4	8260B	ND		1.0	0.12	ug/L	1
1,3-Dichlorobenzene	541-73-1	8260B	ND		1.0	0.34	ug/L	1
1,2-Dichlorobenzene	95-50-1	8260B	ND		1.0	0.34	ug/L	1
1,4-Dichlorobenzene	106-46-7	8260B	ND		1.0	0.34	ug/L	1
Dichlorodifluoromethane	75-71-8	8260B	ND		1.0	0.14	ug/L	1
1,1-Dichloroethane	75-34-3	8260B	ND		1.0	0.11	ug/L	1
1,2-Dichloroethane	107-06-2	8260B	ND		1.0	0.047	ug/L	1
trans-1,2-Dichloroethene	156-60-5	8260B	ND		1.0	0.16	ug/L	1
1,1-Dichloroethene	75-35-4	8260B	ND		1.0	0.19	ug/L	1
cis-1,2-Dichloroethene	156-59-2	8260B	ND		1.0	0.17	ug/L	1
1,2-Dichloropropane	78-87-5	8260B	ND		1.0	0.16	ug/L	1
trans-1,3-Dichloropropene	10061-02-6	8260B	ND		1.0	0.36	ug/L	1
cis-1,3-Dichloropropene	10061-01-5	8260B	ND		1.0	0.18	ug/L	1
Ethylbenzene	100-41-4	8260B	ND		1.0	0.34	ug/L	1
2-Hexanone	591-78-6	8260B	ND		20	0.55	ug/L	1
Isopropylbenzene	98-82-8	8260B	ND		1.0	0.058	ug/L	1
Methyl acetate	79-20-9	8260B	ND		2.0	0.60	ug/L	1
Methyl tertiary butyl ether (MTBE)	1634-04-4	8260B	ND		1.0	0.038	ug/L	1
4-Methyl-2-pentanone	108-10-1	8260B	ND		20	0.62	ug/L	1
Methylcyclohexane	108-87-2	8260B	ND		10	1.9	ug/L	1
Methylene chloride	75-09-2	8260B	0.66	BJ	1.0	0.34	ug/L	1
Styrene	100-42-5	8260B	ND		1.0	0.030	ug/L	1
1,1,2,2-Tetrachloroethane	79-34-5	8260B	ND		1.0	0.026	ug/L	1
Tetrachloroethene	127-18-4	8260B	ND		1.0	0.029	ug/L	1
Toluene	108-88-3	8260B	0.45	J	1.0	0.34	ug/L	1
1,1,2-Trichloro-1,2,2-Trifluoroethane	76-13-1	8260B	ND		1.0	0.60	ug/L	1
1,2,4-Trichlorobenzene	120-82-1	8260B	ND		1.0	0.34	ug/L	1
1,1,1-Trichloroethane	71-55-6	8260B	ND		1.0	0.058	ug/L	1
1,1,2-Trichloroethane	79-00-5	8260B	ND		1.0	0.062	ug/L	1

PQL = Practical quantitation limit
B = Detected in the method blank
E = Quantitation of compound exceeded the calibration range
ND = Not detected at or above the MDL
J = Estimated result < PQL and ≥ MDL
P = The RPD between two GC columns exceeds 40%
Where applicable, all soil sample analysis are reported on a dry weight basis unless flagged with a "W"
N = Recovery is out of criteria
H = Out of holding time

Volatile Organic Compounds by GC/MS

Client: ARCADIS U.S., Inc.
Laboratory ID: LD09018-018
Description: F39TW08 (40-45)
Matrix: Aqueous
Date Sampled: 04/08/2010 1440
Date Received: 04/10/2010

Run	Prep Method	Analytical Method	Dilution	Analysis Date	Analyst	Prep Date	Batch
1	5030B	8260B	2	04/14/2010 2122	LBS		31526

Parameter	CAS Number	Analytical Method	Result	Q	PQL	MDL	Units	Run
Trichloroethene	79-01-6	8260B	ND		1.0	0.049	ug/L	1
Trichlorofluoromethane	75-69-4	8260B	ND		1.0	0.10	ug/L	1
Vinyl chloride	75-01-4	8260B	ND		1.0	0.13	ug/L	1
Xylenes (total)	1330-20-7	8260B	0.48	J	1.0	0.34	ug/L	1

Surrogate	Q	Run 1 % Recovery	Acceptance Limits
1,2-Dichloroethane-d4		95	70-130
Bromofluorobenzene		95	70-130
Toluene-d8		102	70-130

PQL = Practical quantitation limit
B = Detected in the method blank
E = Quantitation of compound exceeded the calibration range
ND = Not detected at or above the MDL
J = Estimated result < PQL and ≥ MDL
P = The RPD between two GC columns exceeds 40%
Where applicable, all soil sample analysis are reported on a dry weight basis unless flagged with a "W"
N = Recovery is out of criteria
H = Out of holding time

Semivolatile Organic Compounds by GC/MS

Client: ARCADIS U.S., Inc.
Laboratory ID: LD09018-018
Description: F39TW08 (40-45)
Matrix: Aqueous
Date Sampled: 04/08/2010 1440
Date Received: 04/10/2010

Run	Prep Method	Analytical Method	Dilution	Analysis Date	Analyst	Prep Date	Batch
1	3520C	8270D	1	04/16/2010 1521	JGH	04/13/2010 0021	31326
2	3520C	8270D	1	04/22/2010 1841	WD	04/18/2010 1330	31716

Parameter	CAS Number	Analytical Method	Result	Q	PQL	MDL	Units	Run
Acenaphthene	83-32-9	8270D	ND		1.0	0.091	ug/L	1
Acenaphthylene	208-96-8	8270D	ND		1.0	0.16	ug/L	1
Acetophenone	98-86-2	8270D	ND		1.0	0.32	ug/L	1
Anthracene	120-12-7	8270D	ND		1.0	0.13	ug/L	1
Atrazine	1912-24-9	8270D	ND		1.0	0.20	ug/L	1
Benzaldehyde	100-52-7	8270D	ND		5.1	1.0	ug/L	1
Benzo(a)anthracene	56-55-3	8270D	ND		1.0	0.15	ug/L	1
Benzo(a)pyrene	50-32-8	8270D	ND		1.0	0.16	ug/L	1
Benzo(b)fluoranthene	205-99-2	8270D	ND		1.0	0.20	ug/L	1
Benzo(g,h,i)perylene	191-24-2	8270D	ND		1.0	0.23	ug/L	1
Benzo(k)fluoranthene	207-08-9	8270D	ND		1.0	0.12	ug/L	1
1,1'-Biphenyl	92-52-4	8270D	ND		1.0	0.20	ug/L	1
4-Bromophenyl phenyl ether	101-55-3	8270D	ND		1.0	0.12	ug/L	1
Butyl benzyl phthalate	85-68-7	8270D	ND		5.1	1.7	ug/L	1
Caprolactam	105-60-2	8270D	ND		5.1	1.2	ug/L	1
Carbazole	86-74-8	8270D	ND		1.0	0.25	ug/L	1
4-Chloro-3-methyl phenol	59-50-7	8270D	ND		1.0	0.22	ug/L	1
4-Chloroaniline	106-47-8	8270D	ND		1.0	0.13	ug/L	1
bis(2-Chloroethoxy)methane	111-91-1	8270D	ND		1.0	0.13	ug/L	1
bis(2-Chloroethyl)ether	111-44-4	8270D	ND		1.0	0.13	ug/L	1
bis(2-Chloroisopropyl)ether	108-60-1	8270D	ND		1.0	0.081	ug/L	1
2-Chloronaphthalene	91-58-7	8270D	ND		1.0	0.12	ug/L	1
2-Chlorophenol	95-57-8	8270D	ND		1.0	0.13	ug/L	1
4-Chlorophenyl phenyl ether	7005-72-3	8270D	ND		1.0	0.11	ug/L	1
Chrysene	218-01-9	8270D	ND		1.0	0.12	ug/L	1
Dibenzo(a,h)anthracene	53-70-3	8270D	ND		1.0	0.13	ug/L	1
Dibenzofuran	132-64-9	8270D	ND		1.0	0.16	ug/L	1
3,3'-Dichlorobenzidine	91-94-1	8270D	ND		5.1	0.82	ug/L	1
2,4-Dichlorophenol	120-83-2	8270D	ND		1.0	0.15	ug/L	1
Diethylphthalate	84-66-2	8270D	ND		5.1	1.7	ug/L	1
Dimethyl phthalate	131-11-3	8270D	ND		5.1	1.7	ug/L	1
2,4-Dimethylphenol	105-67-9	8270D	ND		1.0	0.31	ug/L	1
Di-n-butyl phthalate	84-74-2	8270D	ND		5.1	1.7	ug/L	1
4,6-Dinitro-2-methylphenol	534-52-1	8270D	ND		5.1	1.5	ug/L	1
2,4-Dinitrophenol	51-28-5	8270D	ND		5.1	0.25	ug/L	1
2,4-Dinitrotoluene	121-14-2	8270D	ND		2.0	0.45	ug/L	1
2,6-Dinitrotoluene	606-20-2	8270D	ND		2.0	0.40	ug/L	1
Di-n-octylphthalate	117-84-0	8270D	ND		5.1	1.7	ug/L	1
bis(2-Ethylhexyl)phthalate	117-81-7	8270D	ND		5.1	1.7	ug/L	1
Fluoranthene	206-44-0	8270D	ND		1.0	0.21	ug/L	1
Fluorene	86-73-7	8270D	ND		1.0	0.10	ug/L	1
Hexachlorobenzene	118-74-1	8270D	ND		1.0	0.21	ug/L	1
Hexachlorobutadiene	87-68-3	8270D	ND		1.0	0.091	ug/L	1

PQL = Practical quantitation limit
B = Detected in the method blank
E = Quantitation of compound exceeded the calibration range
ND = Not detected at or above the MDL
J = Estimated result < PQL and ≥ MDL
P = The RPD between two GC columns exceeds 40%
Where applicable, all soil sample analysis are reported on a dry weight basis unless flagged with a "W"
N = Recovery is out of criteria
H = Out of holding time

Semivolatile Organic Compounds by GC/MS

Client: ARCADIS U.S., Inc.
Laboratory ID: LD09018-018
Description: F39TW08 (40-45)
Matrix: Aqueous
Date Sampled: 04/08/2010 1440
Date Received: 04/10/2010

Run	Prep Method	Analytical Method	Dilution	Analysis Date	Analyst	Prep Date	Batch
1	3520C	8270D	1	04/16/2010 1521	JGH	04/13/2010 0021	31326
2	3520C	8270D	1	04/22/2010 1841	WD	04/18/2010 1330	31716

Parameter	CAS Number	Analytical Method	Result	Q	PQL	MDL	Units	Run
Hexachlorocyclopentadiene	77-47-4	8270D	ND		5.1	0.23	ug/L	1
Hexachloroethane	67-72-1	8270D	ND		1.0	0.11	ug/L	1
Indeno(1,2,3-c,d)pyrene	193-39-5	8270D	ND		1.0	0.23	ug/L	1
Isophorone	78-59-1	8270D	ND		1.0	0.081	ug/L	1
2-Methylnaphthalene	91-57-6	8270D	ND		1.0	0.081	ug/L	1
2-Methylphenol	95-48-7	8270D	ND		1.0	0.17	ug/L	1
3 & 4-Methylphenol	106-44-5	8270D	ND		2.0	0.58	ug/L	1
Naphthalene	91-20-3	8270D	ND		1.0	0.071	ug/L	1
2-Nitroaniline	88-74-4	8270D	ND		2.0	0.56	ug/L	1
3-Nitroaniline	99-09-2	8270D	ND		2.0	0.78	ug/L	1
4-Nitroaniline	100-01-6	8270D	ND		2.0	0.39	ug/L	1
Nitrobenzene	98-95-3	8270D	ND		1.0	0.10	ug/L	1
2-Nitrophenol	88-75-5	8270D	ND		2.0	0.27	ug/L	1
4-Nitrophenol	100-02-7	8270D	ND		5.1	0.65	ug/L	1
N-Nitrosodi-n-propylamine	621-64-7	8270D	ND		1.0	0.081	ug/L	1
N-Nitrosodiphenylamine (Diphenylamine)	86-30-6	8270D	ND		1.0	0.38	ug/L	1
Pentachlorophenol	87-86-5	8270D	ND		5.1	0.55	ug/L	1
Phenanthrene	85-01-8	8270D	ND		1.0	0.18	ug/L	1
Phenol	108-95-2	8270D	ND		1.0	0.11	ug/L	1
Pyrene	129-00-0	8270D	ND		1.0	0.16	ug/L	1
2,4,5-Trichlorophenol	95-95-4	8270D	ND		1.0	0.18	ug/L	1
2,4,6-Trichlorophenol	88-06-2	8270D	ND		1.0	0.22	ug/L	1

Surrogate	Q	Run 1 % Recovery	Acceptance Limits	Q	Run 2 % Recovery	Acceptance Limits
2-Fluorobiphenyl		50	37-129	H	67	37-129
2-Fluorophenol		60	24-127	H	66	24-127
Nitrobenzene-d5		38	38-127	H	76	38-127
Phenol-d5		59	28-128	H	73	28-128
Terphenyl-d14	N	7.9	10-148	HN	7.5	10-148
2,4,6-Tribromophenol		68	41-144	H	59	41-144

PQL = Practical quantitation limit
B = Detected in the method blank
E = Quantitation of compound exceeded the calibration range
ND = Not detected at or above the MDL
J = Estimated result < PQL and ≥ MDL
P = The RPD between two GC columns exceeds 40%
Where applicable, all soil sample analysis are reported on a dry weight basis unless flagged with a "W"
N = Recovery is out of criteria
H = Out of holding time

Semivolatile Organic Compounds by GC/MS

Client: ARCADIS U.S., Inc.
Laboratory ID: LD09018-018
Description: F39TW08 (40-45)
Matrix: Aqueous
Date Sampled: 04/08/2010 1440
Date Received: 04/10/2010

Run	Prep Method	Analytical Method	Dilution	Analysis Date	Analyst	Prep Date	Batch
1	3520C	8270D	1	04/16/2010 1521	JGH	04/13/2010 0021	31326
2	3520C	8270D	1	04/22/2010 1841	WD	04/18/2010 1330	31716

Parameter	CAS Number	Analytical Method	Result	Q	PQL	MDL	Units	Run
Acenaphthene	83-32-9	8270D	ND	H	10	0.90	ug/L	2
Acenaphthylene	208-96-8	8270D	ND	H	10	1.6	ug/L	2
Acetophenone	98-86-2	8270D	ND	H	10	3.2	ug/L	2
Anthracene	120-12-7	8270D	ND	H	10	1.3	ug/L	2
Atrazine	1912-24-9	8270D	ND	H	10	2.0	ug/L	2
Benzaldehyde	100-52-7	8270D	ND	H	50	10	ug/L	2
Benzo(a)anthracene	56-55-3	8270D	ND	H	10	1.5	ug/L	2
Benzo(a)pyrene	50-32-8	8270D	ND	H	10	1.6	ug/L	2
Benzo(b)fluoranthene	205-99-2	8270D	ND	H	10	2.0	ug/L	2
Benzo(g,h,i)perylene	191-24-2	8270D	ND	H	10	2.3	ug/L	2
Benzo(k)fluoranthene	207-08-9	8270D	ND	H	10	1.2	ug/L	2
1,1'-Biphenyl	92-52-4	8270D	ND	H	10	2.0	ug/L	2
4-Bromophenyl phenyl ether	101-55-3	8270D	ND	H	10	1.2	ug/L	2
Butyl benzyl phthalate	85-68-7	8270D	ND	H	50	17	ug/L	2
Caprolactam	105-60-2	8270D	ND	H	50	12	ug/L	2
Carbazole	86-74-8	8270D	ND	H	10	2.5	ug/L	2
4-Chloro-3-methyl phenol	59-50-7	8270D	ND	H	10	2.2	ug/L	2
4-Chloroaniline	106-47-8	8270D	ND	H	10	1.3	ug/L	2
bis(2-Chloroethoxy)methane	111-91-1	8270D	ND	H	10	1.3	ug/L	2
bis(2-Chloroethyl)ether	111-44-4	8270D	ND	H	10	1.3	ug/L	2
bis(2-Chloroisopropyl)ether	108-60-1	8270D	ND	H	10	0.80	ug/L	2
2-Chloronaphthalene	91-58-7	8270D	ND	H	10	1.2	ug/L	2
2-Chlorophenol	95-57-8	8270D	ND	H	10	1.3	ug/L	2
4-Chlorophenyl phenyl ether	7005-72-3	8270D	ND	H	10	1.1	ug/L	2
Chrysene	218-01-9	8270D	ND	H	10	1.2	ug/L	2
Dibenzo(a,h)anthracene	53-70-3	8270D	ND	H	10	1.3	ug/L	2
Dibenzofuran	132-64-9	8270D	ND	H	10	1.6	ug/L	2
3,3'-Dichlorobenzidine	91-94-1	8270D	ND	H	50	8.1	ug/L	2
2,4-Dichlorophenol	120-83-2	8270D	ND	H	10	1.5	ug/L	2
Diethylphthalate	84-66-2	8270D	ND	H	50	17	ug/L	2
Dimethyl phthalate	131-11-3	8270D	ND	H	50	17	ug/L	2
2,4-Dimethylphenol	105-67-9	8270D	ND	H	10	3.1	ug/L	2
Di-n-butyl phthalate	84-74-2	8270D	ND	H	50	17	ug/L	2
4,6-Dinitro-2-methylphenol	534-52-1	8270D	ND	H	50	15	ug/L	2
2,4-Dinitrophenol	51-28-5	8270D	ND	H	50	2.5	ug/L	2
2,4-Dinitrotoluene	121-14-2	8270D	ND	H	20	4.5	ug/L	2
2,6-Dinitrotoluene	606-20-2	8270D	ND	H	20	4.0	ug/L	2
Di-n-octylphthalate	117-84-0	8270D	ND	H	50	17	ug/L	2
bis(2-Ethylhexyl)phthalate	117-81-7	8270D	ND	H	50	17	ug/L	2
Fluoranthene	206-44-0	8270D	ND	H	10	2.1	ug/L	2
Fluorene	86-73-7	8270D	ND	H	10	1.0	ug/L	2
Hexachlorobenzene	118-74-1	8270D	ND	H	10	2.1	ug/L	2
Hexachlorobutadiene	87-68-3	8270D	ND	H	10	0.90	ug/L	2

PQL = Practical quantitation limit
B = Detected in the method blank
E = Quantitation of compound exceeded the calibration range
ND = Not detected at or above the MDL
J = Estimated result < PQL and ≥ MDL
P = The RPD between two GC columns exceeds 40%
Where applicable, all soil sample analysis are reported on a dry weight basis unless flagged with a "W"
N = Recovery is out of criteria
H = Out of holding time

Semivolatile Organic Compounds by GC/MS

Client: ARCADIS U.S., Inc.
Laboratory ID: LD09018-018
Description: F39TW08 (40-45)
Matrix: Aqueous
Date Sampled: 04/08/2010 1440
Date Received: 04/10/2010

Run	Prep Method	Analytical Method	Dilution	Analysis Date	Analyst	Prep Date	Batch
1	3520C	8270D	1	04/16/2010 1521	JGH	04/13/2010 0021	31326
2	3520C	8270D	1	04/22/2010 1841	WD	04/18/2010 1330	31716

Parameter	CAS Number	Analytical Method	Result	Q	PQL	MDL	Units	Run
Hexachlorocyclopentadiene	77-47-4	8270D	ND	H	50	2.3	ug/L	2
Hexachloroethane	67-72-1	8270D	ND	H	10	1.1	ug/L	2
Indeno(1,2,3-c,d)pyrene	193-39-5	8270D	ND	H	10	2.3	ug/L	2
Isophorone	78-59-1	8270D	ND	H	10	0.80	ug/L	2
2-Methylnaphthalene	91-57-6	8270D	ND	H	10	0.80	ug/L	2
2-Methylphenol	95-48-7	8270D	ND	H	10	1.7	ug/L	2
3 & 4-Methylphenol	106-44-5	8270D	ND	H	20	5.7	ug/L	2
Naphthalene	91-20-3	8270D	ND	H	10	0.70	ug/L	2
2-Nitroaniline	88-74-4	8270D	ND	H	20	5.5	ug/L	2
3-Nitroaniline	99-09-2	8270D	ND	H	20	7.7	ug/L	2
4-Nitroaniline	100-01-6	8270D	ND	H	20	3.9	ug/L	2
Nitrobenzene	98-95-3	8270D	ND	H	10	1.0	ug/L	2
2-Nitrophenol	88-75-5	8270D	ND	H	20	2.7	ug/L	2
4-Nitrophenol	100-02-7	8270D	ND	H	50	6.4	ug/L	2
N-Nitrosodi-n-propylamine	621-64-7	8270D	ND	H	10	0.80	ug/L	2
N-Nitrosodiphenylamine (Diphenylamine)	86-30-6	8270D	ND	H	10	3.8	ug/L	2
Pentachlorophenol	87-86-5	8270D	ND	H	50	5.4	ug/L	2
Phenanthrene	85-01-8	8270D	ND	H	10	1.8	ug/L	2
Phenol	108-95-2	8270D	ND	H	10	1.1	ug/L	2
Pyrene	129-00-0	8270D	ND	H	10	1.6	ug/L	2
2,4,5-Trichlorophenol	95-95-4	8270D	ND	H	10	1.8	ug/L	2
2,4,6-Trichlorophenol	88-06-2	8270D	ND	H	10	2.2	ug/L	2

Surrogate	Q	Run 1 % Recovery	Acceptance Limits	Q	Run 2 % Recovery	Acceptance Limits
2-Fluorobiphenyl		50	37-129	H	67	37-129
2-Fluorophenol		60	24-127	H	66	24-127
Nitrobenzene-d5		38	38-127	H	76	38-127
Phenol-d5		59	28-128	H	73	28-128
Terphenyl-d14	N	7.9	10-148	HN	7.5	10-148
2,4,6-Tribromophenol		68	41-144	H	59	41-144

PQL = Practical quantitation limit
B = Detected in the method blank
E = Quantitation of compound exceeded the calibration range
ND = Not detected at or above the MDL
J = Estimated result < PQL and ≥ MDL
P = The RPD between two GC columns exceeds 40%
Where applicable, all soil sample analysis are reported on a dry weight basis unless flagged with a "W"
N = Recovery is out of criteria
H = Out of holding time

Volatile Organic Compounds by GC/MS

Client: ARCADIS U.S., Inc.
Laboratory ID: LD09018-019
Description: F39SW-01 (040810)
Matrix: Aqueous
Date Sampled: 04/08/2010 0845
Date Received: 04/10/2010

Run	Prep Method	Analytical Method	Dilution	Analysis Date	Analyst	Prep Date	Batch
1	5030B	8260B	1	04/14/2010 1511	LBS		31526

Parameter	CAS Number	Analytical Method	Result	Q	PQL	MDL	Units	Run
Acetone	67-64-1	8260B	1.7	J	10	0.061	ug/L	1
Benzene	71-43-2	8260B	ND		0.50	0.027	ug/L	1
Bromodichloromethane	75-27-4	8260B	ND		0.50	0.17	ug/L	1
Bromoform	75-25-2	8260B	ND		0.50	0.010	ug/L	1
Bromomethane (Methyl bromide)	74-83-9	8260B	ND		0.50	0.20	ug/L	1
2-Butanone (MEK)	78-93-3	8260B	ND		10	2.0	ug/L	1
Carbon disulfide	75-15-0	8260B	ND		0.50	0.097	ug/L	1
Carbon tetrachloride	56-23-5	8260B	ND		0.50	0.085	ug/L	1
Chlorobenzene	108-90-7	8260B	ND		0.50	0.17	ug/L	1
Chloroethane	75-00-3	8260B	ND		0.50	0.17	ug/L	1
Chloroform	67-66-3	8260B	ND		0.50	0.17	ug/L	1
Chloromethane (Methyl chloride)	74-87-3	8260B	ND		0.50	0.17	ug/L	1
Cyclohexane	110-82-7	8260B	ND		0.50	0.30	ug/L	1
1,2-Dibromo-3-chloropropane (DBCP)	96-12-8	8260B	ND		0.50	0.069	ug/L	1
Dibromochloromethane	124-48-1	8260B	ND		0.50	0.17	ug/L	1
1,2-Dibromoethane (EDB)	106-93-4	8260B	ND		0.50	0.061	ug/L	1
1,3-Dichlorobenzene	541-73-1	8260B	ND		0.50	0.17	ug/L	1
1,2-Dichlorobenzene	95-50-1	8260B	ND		0.50	0.17	ug/L	1
1,4-Dichlorobenzene	106-46-7	8260B	ND		0.50	0.17	ug/L	1
Dichlorodifluoromethane	75-71-8	8260B	ND		0.50	0.071	ug/L	1
1,1-Dichloroethane	75-34-3	8260B	ND		0.50	0.054	ug/L	1
1,2-Dichloroethane	107-06-2	8260B	ND		0.50	0.023	ug/L	1
trans-1,2-Dichloroethene	156-60-5	8260B	0.11	J	0.50	0.079	ug/L	1
1,1-Dichloroethene	75-35-4	8260B	ND		0.50	0.094	ug/L	1
cis-1,2-Dichloroethene	156-59-2	8260B	1.1		0.50	0.087	ug/L	1
1,2-Dichloropropane	78-87-5	8260B	ND		0.50	0.081	ug/L	1
trans-1,3-Dichloropropene	10061-02-6	8260B	ND		0.50	0.18	ug/L	1
cis-1,3-Dichloropropene	10061-01-5	8260B	ND		0.50	0.090	ug/L	1
Ethylbenzene	100-41-4	8260B	ND		0.50	0.17	ug/L	1
2-Hexanone	591-78-6	8260B	ND		10	0.27	ug/L	1
Isopropylbenzene	98-82-8	8260B	ND		0.50	0.029	ug/L	1
Methyl acetate	79-20-9	8260B	ND		1.0	0.30	ug/L	1
Methyl tertiary butyl ether (MTBE)	1634-04-4	8260B	ND		0.50	0.019	ug/L	1
4-Methyl-2-pentanone	108-10-1	8260B	ND		10	0.31	ug/L	1
Methylcyclohexane	108-87-2	8260B	ND		5.0	0.95	ug/L	1
Methylene chloride	75-09-2	8260B	0.23	BJ	0.50	0.17	ug/L	1
Styrene	100-42-5	8260B	ND		0.50	0.015	ug/L	1
1,1,2,2-Tetrachloroethane	79-34-5	8260B	ND		0.50	0.013	ug/L	1
Tetrachloroethene	127-18-4	8260B	0.12	J	0.50	0.014	ug/L	1
Toluene	108-88-3	8260B	ND		0.50	0.17	ug/L	1
1,1,2-Trichloro-1,2,2-Trifluoroethane	76-13-1	8260B	ND		0.50	0.30	ug/L	1
1,2,4-Trichlorobenzene	120-82-1	8260B	ND		0.50	0.17	ug/L	1
1,1,1-Trichloroethane	71-55-6	8260B	ND		0.50	0.029	ug/L	1
1,1,2-Trichloroethane	79-00-5	8260B	ND		0.50	0.031	ug/L	1

PQL = Practical quantitation limit
B = Detected in the method blank
E = Quantitation of compound exceeded the calibration range
ND = Not detected at or above the MDL
J = Estimated result < PQL and ≥ MDL
P = The RPD between two GC columns exceeds 40%
Where applicable, all soil sample analysis are reported on a dry weight basis unless flagged with a "W"
N = Recovery is out of criteria
H = Out of holding time

Volatile Organic Compounds by GC/MS

Client: ARCADIS U.S., Inc.
Laboratory ID: LD09018-019
Description: F39SW-01 (040810)
Matrix: Aqueous
Date Sampled: 04/08/2010 0845
Date Received: 04/10/2010

Run	Prep Method	Analytical Method	Dilution	Analysis Date	Analyst	Prep Date	Batch
1	5030B	8260B	1	04/14/2010 1511	LBS		31526

Parameter	CAS Number	Analytical Method	Result	Q	PQL	MDL	Units	Run
Trichloroethene	79-01-6	8260B	1.5		0.50	0.024	ug/L	1
Trichlorofluoromethane	75-69-4	8260B	ND		0.50	0.051	ug/L	1
Vinyl chloride	75-01-4	8260B	ND		0.50	0.065	ug/L	1
Xylenes (total)	1330-20-7	8260B	ND		0.50	0.17	ug/L	1

Surrogate	Q	Run 1 % Recovery	Acceptance Limits
1,2-Dichloroethane-d4		96	70-130
Bromofluorobenzene		94	70-130
Toluene-d8		103	70-130

PQL = Practical quantitation limit
B = Detected in the method blank
E = Quantitation of compound exceeded the calibration range
ND = Not detected at or above the MDL
J = Estimated result < PQL and ≥ MDL
P = The RPD between two GC columns exceeds 40%
Where applicable, all soil sample analysis are reported on a dry weight basis unless flagged with a "W"
N = Recovery is out of criteria
H = Out of holding time

Semivolatile Organic Compounds by GC/MS

Client: ARCADIS U.S., Inc.
Laboratory ID: LD09018-019
Description: F39SW-01 (040810)
Matrix: Aqueous
Date Sampled: 04/08/2010 0845
Date Received: 04/10/2010

Run	Prep Method	Analytical Method	Dilution	Analysis Date	Analyst	Prep Date	Batch
1	3520C	8270D	1	04/15/2010 1909	JGH	04/13/2010 0021	31326

Parameter	CAS Number	Analytical Method	Result	Q	PQL	MDL	Units	Run
Acenaphthene	83-32-9	8270D	ND		1.0	0.090	ug/L	1
Acenaphthylene	208-96-8	8270D	ND		1.0	0.16	ug/L	1
Acetophenone	98-86-2	8270D	ND		1.0	0.32	ug/L	1
Anthracene	120-12-7	8270D	ND		1.0	0.13	ug/L	1
Atrazine	1912-24-9	8270D	ND		1.0	0.20	ug/L	1
Benzaldehyde	100-52-7	8270D	ND		5.0	1.0	ug/L	1
Benzo(a)anthracene	56-55-3	8270D	ND		1.0	0.15	ug/L	1
Benzo(a)pyrene	50-32-8	8270D	ND		1.0	0.16	ug/L	1
Benzo(b)fluoranthene	205-99-2	8270D	ND		1.0	0.20	ug/L	1
Benzo(g,h,i)perylene	191-24-2	8270D	ND		1.0	0.23	ug/L	1
Benzo(k)fluoranthene	207-08-9	8270D	ND		1.0	0.12	ug/L	1
1,1'-Biphenyl	92-52-4	8270D	ND		1.0	0.20	ug/L	1
4-Bromophenyl phenyl ether	101-55-3	8270D	ND		1.0	0.12	ug/L	1
Butyl benzyl phthalate	85-68-7	8270D	ND		5.0	1.7	ug/L	1
Caprolactam	105-60-2	8270D	ND		5.0	1.2	ug/L	1
Carbazole	86-74-8	8270D	ND		1.0	0.25	ug/L	1
4-Chloro-3-methyl phenol	59-50-7	8270D	ND		1.0	0.22	ug/L	1
4-Chloroaniline	106-47-8	8270D	ND		1.0	0.13	ug/L	1
bis(2-Chloroethoxy)methane	111-91-1	8270D	ND		1.0	0.13	ug/L	1
bis(2-Chloroethyl)ether	111-44-4	8270D	ND		1.0	0.13	ug/L	1
bis(2-Chloroisopropyl)ether	108-60-1	8270D	ND		1.0	0.080	ug/L	1
2-Chloronaphthalene	91-58-7	8270D	ND		1.0	0.12	ug/L	1
2-Chlorophenol	95-57-8	8270D	ND		1.0	0.13	ug/L	1
4-Chlorophenyl phenyl ether	7005-72-3	8270D	ND		1.0	0.11	ug/L	1
Chrysene	218-01-9	8270D	ND		1.0	0.12	ug/L	1
Dibenzo(a,h)anthracene	53-70-3	8270D	ND		1.0	0.13	ug/L	1
Dibenzofuran	132-64-9	8270D	ND		1.0	0.16	ug/L	1
3,3'-Dichlorobenzidine	91-94-1	8270D	ND		5.0	0.81	ug/L	1
2,4-Dichlorophenol	120-83-2	8270D	ND		1.0	0.15	ug/L	1
Diethylphthalate	84-66-2	8270D	ND		5.0	1.7	ug/L	1
Dimethyl phthalate	131-11-3	8270D	ND		5.0	1.7	ug/L	1
2,4-Dimethylphenol	105-67-9	8270D	ND		1.0	0.31	ug/L	1
Di-n-butyl phthalate	84-74-2	8270D	ND		5.0	1.7	ug/L	1
4,6-Dinitro-2-methylphenol	534-52-1	8270D	ND		5.0	1.5	ug/L	1
2,4-Dinitrophenol	51-28-5	8270D	ND		5.0	0.25	ug/L	1
2,4-Dinitrotoluene	121-14-2	8270D	ND		2.0	0.45	ug/L	1
2,6-Dinitrotoluene	606-20-2	8270D	ND		2.0	0.40	ug/L	1
Di-n-octylphthalate	117-84-0	8270D	ND		5.0	1.7	ug/L	1
bis(2-Ethylhexyl)phthalate	117-81-7	8270D	ND		5.0	1.7	ug/L	1
Fluoranthene	206-44-0	8270D	ND		1.0	0.21	ug/L	1
Fluorene	86-73-7	8270D	ND		1.0	0.10	ug/L	1
Hexachlorobenzene	118-74-1	8270D	ND		1.0	0.21	ug/L	1
Hexachlorobutadiene	87-68-3	8270D	ND		1.0	0.090	ug/L	1
Hexachlorocyclopentadiene	77-47-4	8270D	ND		5.0	0.23	ug/L	1

PQL = Practical quantitation limit
B = Detected in the method blank
E = Quantitation of compound exceeded the calibration range
ND = Not detected at or above the MDL
J = Estimated result < PQL and ≥ MDL
P = The RPD between two GC columns exceeds 40%
Where applicable, all soil sample analysis are reported on a dry weight basis unless flagged with a "W"
N = Recovery is out of criteria
H = Out of holding time

Semivolatile Organic Compounds by GC/MS

Client: ARCADIS U.S., Inc.
Laboratory ID: LD09018-019
Description: F39SW-01 (040810)
Matrix: Aqueous
Date Sampled: 04/08/2010 0845
Date Received: 04/10/2010

Run	Prep Method	Analytical Method	Dilution	Analysis Date	Analyst	Prep Date	Batch
1	3520C	8270D	1	04/15/2010 1909	JGH	04/13/2010 0021	31326

Parameter	CAS Number	Analytical Method	Result	Q	PQL	MDL	Units	Run
Hexachloroethane	67-72-1	8270D	ND		1.0	0.11	ug/L	1
Indeno(1,2,3-c,d)pyrene	193-39-5	8270D	ND		1.0	0.23	ug/L	1
Isophorone	78-59-1	8270D	ND		1.0	0.080	ug/L	1
2-Methylnaphthalene	91-57-6	8270D	ND		1.0	0.080	ug/L	1
2-Methylphenol	95-48-7	8270D	ND		1.0	0.17	ug/L	1
3 & 4-Methylphenol	106-44-5	8270D	ND		2.0	0.57	ug/L	1
Naphthalene	91-20-3	8270D	ND		1.0	0.070	ug/L	1
2-Nitroaniline	88-74-4	8270D	ND		2.0	0.55	ug/L	1
3-Nitroaniline	99-09-2	8270D	ND		2.0	0.77	ug/L	1
4-Nitroaniline	100-01-6	8270D	ND		2.0	0.39	ug/L	1
Nitrobenzene	98-95-3	8270D	ND		1.0	0.10	ug/L	1
2-Nitrophenol	88-75-5	8270D	ND		2.0	0.27	ug/L	1
4-Nitrophenol	100-02-7	8270D	ND		5.0	0.64	ug/L	1
N-Nitrosodi-n-propylamine	621-64-7	8270D	ND		1.0	0.080	ug/L	1
N-Nitrosodiphenylamine (Diphenylamine)	86-30-6	8270D	ND		1.0	0.38	ug/L	1
Pentachlorophenol	87-86-5	8270D	ND		5.0	0.54	ug/L	1
Phenanthrene	85-01-8	8270D	ND		1.0	0.18	ug/L	1
Phenol	108-95-2	8270D	ND		1.0	0.11	ug/L	1
Pyrene	129-00-0	8270D	ND		1.0	0.16	ug/L	1
2,4,5-Trichlorophenol	95-95-4	8270D	ND		1.0	0.18	ug/L	1
2,4,6-Trichlorophenol	88-06-2	8270D	ND		1.0	0.22	ug/L	1

Surrogate	Q	Run 1 % Recovery	Acceptance Limits
2-Fluorobiphenyl		88	37-129
2-Fluorophenol		74	24-127
Nitrobenzene-d5		83	38-127
Phenol-d5		74	28-128
Terphenyl-d14		86	10-148
2,4,6-Tribromophenol		117	41-144

PQL = Practical quantitation limit
B = Detected in the method blank
E = Quantitation of compound exceeded the calibration range
ND = Not detected at or above the MDL
J = Estimated result < PQL and ≥ MDL
P = The RPD between two GC columns exceeds 40%
Where applicable, all soil sample analysis are reported on a dry weight basis unless flagged with a "W"
N = Recovery is out of criteria
H = Out of holding time

RCRA Metals

Client: ARCADIS U.S., Inc.
Description: F39SW-01 (040810)
Date Sampled: 04/08/2010 0845
Date Received: 04/10/2010

Laboratory ID: LD09018-019
Matrix: Aqueous

Run	Prep Method	Analytical Method	Dilution	Analysis Date	Analyst	Prep Date	Batch
1	3005A	6010C	1	04/14/2010 0058	CDF	04/12/2010 1845	31332
1		7470A	1	04/12/2010 2150	BNW	04/12/2010 1645	31319
2	3005A	6010C	1	04/14/2010 1355	KJC	04/12/2010 1845	31332

Parameter	CAS Number	Analytical Method	Result	Q	PQL	MDL	Units	Run
Arsenic	7440-38-2	6010C	ND		0.010	0.0040	mg/L	1
Barium	7440-39-3	6010C	0.040		0.025	0.0075	mg/L	1
Cadmium	7440-43-9	6010C	ND		0.0020	0.00060	mg/L	1
Chromium	7440-47-3	6010C	ND		0.0050	0.0021	mg/L	1
Lead	7439-92-1	6010C	0.0031	J	0.010	0.0019	mg/L	1
Mercury	7439-97-6	7470A	ND		0.00010	0.000053	mg/L	1
Selenium	7782-49-2	6010C	ND		0.010	0.0026	mg/L	1
Silver	7440-22-4	6010C	0.00052	BJ	0.0050	0.00040	mg/L	2

PQL = Practical quantitation limit
ND = Not detected at or above the MDL
Where applicable, all soil sample analysis are reported on a dry weight basis unless flagged with a "W"
B = Detected in the method blank
J = Estimated result < PQL and ≥ MDL
E = Quantitation of compound exceeded the calibration range
P = The RPD between two GC columns exceeds 40%
N = Recovery is out of criteria
H = Out of holding time

Volatile Organic Compounds by GC/MS

Client: ARCADIS U.S., Inc.
Laboratory ID: LD09018-020
Description: F39SW-02 (040810)
Matrix: Aqueous
Date Sampled: 04/08/2010 1300
Date Received: 04/10/2010

Run	Prep Method	Analytical Method	Dilution	Analysis Date	Analyst	Prep Date	Batch
1	5030B	8260B	1	04/14/2010 1533	LBS		31526

Parameter	CAS Number	Analytical Method	Result	Q	PQL	MDL	Units	Run
Acetone	67-64-1	8260B	4.0	J	10	0.061	ug/L	1
Benzene	71-43-2	8260B	ND		0.50	0.027	ug/L	1
Bromodichloromethane	75-27-4	8260B	ND		0.50	0.17	ug/L	1
Bromoform	75-25-2	8260B	ND		0.50	0.010	ug/L	1
Bromomethane (Methyl bromide)	74-83-9	8260B	ND		0.50	0.20	ug/L	1
2-Butanone (MEK)	78-93-3	8260B	ND		10	2.0	ug/L	1
Carbon disulfide	75-15-0	8260B	ND		0.50	0.097	ug/L	1
Carbon tetrachloride	56-23-5	8260B	ND		0.50	0.085	ug/L	1
Chlorobenzene	108-90-7	8260B	ND		0.50	0.17	ug/L	1
Chloroethane	75-00-3	8260B	ND		0.50	0.17	ug/L	1
Chloroform	67-66-3	8260B	ND		0.50	0.17	ug/L	1
Chloromethane (Methyl chloride)	74-87-3	8260B	ND		0.50	0.17	ug/L	1
Cyclohexane	110-82-7	8260B	ND		0.50	0.30	ug/L	1
1,2-Dibromo-3-chloropropane (DBCP)	96-12-8	8260B	ND		0.50	0.069	ug/L	1
Dibromochloromethane	124-48-1	8260B	ND		0.50	0.17	ug/L	1
1,2-Dibromoethane (EDB)	106-93-4	8260B	ND		0.50	0.061	ug/L	1
1,3-Dichlorobenzene	541-73-1	8260B	ND		0.50	0.17	ug/L	1
1,2-Dichlorobenzene	95-50-1	8260B	ND		0.50	0.17	ug/L	1
1,4-Dichlorobenzene	106-46-7	8260B	ND		0.50	0.17	ug/L	1
Dichlorodifluoromethane	75-71-8	8260B	ND		0.50	0.071	ug/L	1
1,1-Dichloroethane	75-34-3	8260B	ND		0.50	0.054	ug/L	1
1,2-Dichloroethane	107-06-2	8260B	ND		0.50	0.023	ug/L	1
trans-1,2-Dichloroethene	156-60-5	8260B	ND		0.50	0.079	ug/L	1
1,1-Dichloroethene	75-35-4	8260B	ND		0.50	0.094	ug/L	1
cis-1,2-Dichloroethene	156-59-2	8260B	0.86		0.50	0.087	ug/L	1
1,2-Dichloropropane	78-87-5	8260B	ND		0.50	0.081	ug/L	1
trans-1,3-Dichloropropene	10061-02-6	8260B	ND		0.50	0.18	ug/L	1
cis-1,3-Dichloropropene	10061-01-5	8260B	ND		0.50	0.090	ug/L	1
Ethylbenzene	100-41-4	8260B	ND		0.50	0.17	ug/L	1
2-Hexanone	591-78-6	8260B	ND		10	0.27	ug/L	1
Isopropylbenzene	98-82-8	8260B	ND		0.50	0.029	ug/L	1
Methyl acetate	79-20-9	8260B	ND		1.0	0.30	ug/L	1
Methyl tertiary butyl ether (MTBE)	1634-04-4	8260B	ND		0.50	0.019	ug/L	1
4-Methyl-2-pentanone	108-10-1	8260B	ND		10	0.31	ug/L	1
Methylcyclohexane	108-87-2	8260B	ND		5.0	0.95	ug/L	1
Methylene chloride	75-09-2	8260B	0.22	BJ	0.50	0.17	ug/L	1
Styrene	100-42-5	8260B	ND		0.50	0.015	ug/L	1
1,1,2,2-Tetrachloroethane	79-34-5	8260B	ND		0.50	0.013	ug/L	1
Tetrachloroethene	127-18-4	8260B	0.14	J	0.50	0.014	ug/L	1
Toluene	108-88-3	8260B	ND		0.50	0.17	ug/L	1
1,1,2-Trichloro-1,2,2-Trifluoroethane	76-13-1	8260B	ND		0.50	0.30	ug/L	1
1,2,4-Trichlorobenzene	120-82-1	8260B	ND		0.50	0.17	ug/L	1
1,1,1-Trichloroethane	71-55-6	8260B	ND		0.50	0.029	ug/L	1
1,1,2-Trichloroethane	79-00-5	8260B	ND		0.50	0.031	ug/L	1

PQL = Practical quantitation limit
B = Detected in the method blank
E = Quantitation of compound exceeded the calibration range
ND = Not detected at or above the MDL
J = Estimated result < PQL and ≥ MDL
P = The RPD between two GC columns exceeds 40%
Where applicable, all soil sample analysis are reported on a dry weight basis unless flagged with a "W"
N = Recovery is out of criteria
H = Out of holding time

Volatile Organic Compounds by GC/MS

Client: ARCADIS U.S., Inc.
Laboratory ID: LD09018-020
Description: F39SW-02 (040810)
Matrix: Aqueous
Date Sampled: 04/08/2010 1300
Date Received: 04/10/2010

Run	Prep Method	Analytical Method	Dilution	Analysis Date	Analyst	Prep Date	Batch
1	5030B	8260B	1	04/14/2010 1533	LBS		31526

Parameter	CAS Number	Analytical Method	Result	Q	PQL	MDL	Units	Run
Trichloroethene	79-01-6	8260B	1.5		0.50	0.024	ug/L	1
Trichlorofluoromethane	75-69-4	8260B	ND		0.50	0.051	ug/L	1
Vinyl chloride	75-01-4	8260B	ND		0.50	0.065	ug/L	1
Xylenes (total)	1330-20-7	8260B	ND		0.50	0.17	ug/L	1

Surrogate	Q	Run 1 % Recovery	Acceptance Limits
1,2-Dichloroethane-d4		96	70-130
Bromofluorobenzene		94	70-130
Toluene-d8		103	70-130

PQL = Practical quantitation limit
B = Detected in the method blank
E = Quantitation of compound exceeded the calibration range
ND = Not detected at or above the MDL
J = Estimated result < PQL and ≥ MDL
P = The RPD between two GC columns exceeds 40%
Where applicable, all soil sample analysis are reported on a dry weight basis unless flagged with a "W"
N = Recovery is out of criteria
H = Out of holding time

Semivolatile Organic Compounds by GC/MS

Client: ARCADIS U.S., Inc.
Laboratory ID: LD09018-020
Description: F39SW-02 (040810)
Matrix: Aqueous
Date Sampled: 04/08/2010 1300
Date Received: 04/10/2010

Run	Prep Method	Analytical Method	Dilution	Analysis Date	Analyst	Prep Date	Batch
1	3520C	8270D	1	04/15/2010 2046	JGH	04/13/2010 0021	31326

Parameter	CAS Number	Analytical Method	Result	Q	PQL	MDL	Units	Run
Acenaphthene	83-32-9	8270D	ND		1.0	0.090	ug/L	1
Acenaphthylene	208-96-8	8270D	ND		1.0	0.16	ug/L	1
Acetophenone	98-86-2	8270D	ND		1.0	0.32	ug/L	1
Anthracene	120-12-7	8270D	ND		1.0	0.13	ug/L	1
Atrazine	1912-24-9	8270D	ND		1.0	0.20	ug/L	1
Benzaldehyde	100-52-7	8270D	ND		5.0	1.0	ug/L	1
Benzo(a)anthracene	56-55-3	8270D	ND		1.0	0.15	ug/L	1
Benzo(a)pyrene	50-32-8	8270D	ND		1.0	0.16	ug/L	1
Benzo(b)fluoranthene	205-99-2	8270D	ND		1.0	0.20	ug/L	1
Benzo(g,h,i)perylene	191-24-2	8270D	ND		1.0	0.23	ug/L	1
Benzo(k)fluoranthene	207-08-9	8270D	ND		1.0	0.12	ug/L	1
1,1'-Biphenyl	92-52-4	8270D	ND		1.0	0.20	ug/L	1
4-Bromophenyl phenyl ether	101-55-3	8270D	ND		1.0	0.12	ug/L	1
Butyl benzyl phthalate	85-68-7	8270D	ND		5.0	1.7	ug/L	1
Caprolactam	105-60-2	8270D	ND		5.0	1.2	ug/L	1
Carbazole	86-74-8	8270D	ND		1.0	0.25	ug/L	1
4-Chloro-3-methyl phenol	59-50-7	8270D	ND		1.0	0.22	ug/L	1
4-Chloroaniline	106-47-8	8270D	ND		1.0	0.13	ug/L	1
bis(2-Chloroethoxy)methane	111-91-1	8270D	ND		1.0	0.13	ug/L	1
bis(2-Chloroethyl)ether	111-44-4	8270D	ND		1.0	0.13	ug/L	1
bis(2-Chloroisopropyl)ether	108-60-1	8270D	ND		1.0	0.080	ug/L	1
2-Chloronaphthalene	91-58-7	8270D	ND		1.0	0.12	ug/L	1
2-Chlorophenol	95-57-8	8270D	ND		1.0	0.13	ug/L	1
4-Chlorophenyl phenyl ether	7005-72-3	8270D	ND		1.0	0.11	ug/L	1
Chrysene	218-01-9	8270D	ND		1.0	0.12	ug/L	1
Dibenzo(a,h)anthracene	53-70-3	8270D	ND		1.0	0.13	ug/L	1
Dibenzofuran	132-64-9	8270D	ND		1.0	0.16	ug/L	1
3,3'-Dichlorobenzidine	91-94-1	8270D	ND		5.0	0.81	ug/L	1
2,4-Dichlorophenol	120-83-2	8270D	ND		1.0	0.15	ug/L	1
Diethylphthalate	84-66-2	8270D	ND		5.0	1.7	ug/L	1
Dimethyl phthalate	131-11-3	8270D	ND		5.0	1.7	ug/L	1
2,4-Dimethylphenol	105-67-9	8270D	ND		1.0	0.31	ug/L	1
Di-n-butyl phthalate	84-74-2	8270D	ND		5.0	1.7	ug/L	1
4,6-Dinitro-2-methylphenol	534-52-1	8270D	ND		5.0	1.5	ug/L	1
2,4-Dinitrophenol	51-28-5	8270D	ND		5.0	0.25	ug/L	1
2,4-Dinitrotoluene	121-14-2	8270D	ND		2.0	0.45	ug/L	1
2,6-Dinitrotoluene	606-20-2	8270D	ND		2.0	0.40	ug/L	1
Di-n-octylphthalate	117-84-0	8270D	ND		5.0	1.7	ug/L	1
bis(2-Ethylhexyl)phthalate	117-81-7	8270D	ND		5.0	1.7	ug/L	1
Fluoranthene	206-44-0	8270D	ND		1.0	0.21	ug/L	1
Fluorene	86-73-7	8270D	ND		1.0	0.10	ug/L	1
Hexachlorobenzene	118-74-1	8270D	ND		1.0	0.21	ug/L	1
Hexachlorobutadiene	87-68-3	8270D	ND		1.0	0.090	ug/L	1
Hexachlorocyclopentadiene	77-47-4	8270D	ND		5.0	0.23	ug/L	1

PQL = Practical quantitation limit
B = Detected in the method blank
E = Quantitation of compound exceeded the calibration range
ND = Not detected at or above the MDL
J = Estimated result < PQL and ≥ MDL
P = The RPD between two GC columns exceeds 40%
Where applicable, all soil sample analysis are reported on a dry weight basis unless flagged with a "W"
N = Recovery is out of criteria
H = Out of holding time

Semivolatile Organic Compounds by GC/MS

Client: ARCADIS U.S., Inc.
Laboratory ID: LD09018-020
Description: F39SW-02 (040810)
Matrix: Aqueous
Date Sampled: 04/08/2010 1300
Date Received: 04/10/2010

Run	Prep Method	Analytical Method	Dilution	Analysis Date	Analyst	Prep Date	Batch
1	3520C	8270D	1	04/15/2010 2046	JGH	04/13/2010 0021	31326

Parameter	CAS Number	Analytical Method	Result	Q	PQL	MDL	Units	Run
Hexachloroethane	67-72-1	8270D	ND		1.0	0.11	ug/L	1
Indeno(1,2,3-c,d)pyrene	193-39-5	8270D	ND		1.0	0.23	ug/L	1
Isophorone	78-59-1	8270D	ND		1.0	0.080	ug/L	1
2-Methylnaphthalene	91-57-6	8270D	ND		1.0	0.080	ug/L	1
2-Methylphenol	95-48-7	8270D	ND		1.0	0.17	ug/L	1
3 & 4-Methylphenol	106-44-5	8270D	ND		2.0	0.57	ug/L	1
Naphthalene	91-20-3	8270D	ND		1.0	0.070	ug/L	1
2-Nitroaniline	88-74-4	8270D	ND		2.0	0.55	ug/L	1
3-Nitroaniline	99-09-2	8270D	ND		2.0	0.77	ug/L	1
4-Nitroaniline	100-01-6	8270D	ND		2.0	0.39	ug/L	1
Nitrobenzene	98-95-3	8270D	ND		1.0	0.10	ug/L	1
2-Nitrophenol	88-75-5	8270D	ND		2.0	0.27	ug/L	1
4-Nitrophenol	100-02-7	8270D	ND		5.0	0.64	ug/L	1
N-Nitrosodi-n-propylamine	621-64-7	8270D	ND		1.0	0.080	ug/L	1
N-Nitrosodiphenylamine (Diphenylamine)	86-30-6	8270D	ND		1.0	0.38	ug/L	1
Pentachlorophenol	87-86-5	8270D	ND		5.0	0.54	ug/L	1
Phenanthrene	85-01-8	8270D	ND		1.0	0.18	ug/L	1
Phenol	108-95-2	8270D	ND		1.0	0.11	ug/L	1
Pyrene	129-00-0	8270D	ND		1.0	0.16	ug/L	1
2,4,5-Trichlorophenol	95-95-4	8270D	ND		1.0	0.18	ug/L	1
2,4,6-Trichlorophenol	88-06-2	8270D	ND		1.0	0.22	ug/L	1

Surrogate	Q	Run 1 % Recovery	Acceptance Limits
2-Fluorobiphenyl		88	37-129
2-Fluorophenol		81	24-127
Nitrobenzene-d5		91	38-127
Phenol-d5		78	28-128
Terphenyl-d14		84	10-148
2,4,6-Tribromophenol		113	41-144

PQL = Practical quantitation limit
B = Detected in the method blank
E = Quantitation of compound exceeded the calibration range
ND = Not detected at or above the MDL
J = Estimated result < PQL and ≥ MDL
P = The RPD between two GC columns exceeds 40%
Where applicable, all soil sample analysis are reported on a dry weight basis unless flagged with a "W"
N = Recovery is out of criteria
H = Out of holding time

RCRA Metals

Client: ARCADIS U.S., Inc.
Description: F39SW-02 (040810)
Date Sampled: 04/08/2010 1300
Date Received: 04/10/2010

Laboratory ID: LD09018-020
Matrix: Aqueous

Run	Prep Method	Analytical Method	Dilution	Analysis Date	Analyst	Prep Date	Batch
1	3005A	6010C	1	04/14/2010 0103	CDF	04/12/2010 1845	31332
1		7470A	1	04/12/2010 2153	BNW	04/12/2010 1645	31319
2	3005A	6010C	1	04/14/2010 1401	KJC	04/12/2010 1845	31332

Parameter	CAS Number	Analytical Method	Result	Q	PQL	MDL	Units	Run
Arsenic	7440-38-2	6010C	0.0060	BJ	0.010	0.0040	mg/L	1
Barium	7440-39-3	6010C	0.038		0.025	0.0075	mg/L	1
Cadmium	7440-43-9	6010C	ND		0.0020	0.00060	mg/L	1
Chromium	7440-47-3	6010C	ND		0.0050	0.0021	mg/L	1
Lead	7439-92-1	6010C	0.0039	J	0.010	0.0019	mg/L	1
Mercury	7439-97-6	7470A	ND		0.00010	0.000053	mg/L	1
Selenium	7782-49-2	6010C	ND		0.010	0.0026	mg/L	1
Silver	7440-22-4	6010C	0.0011	BJ	0.0050	0.00040	mg/L	2

PQL = Practical quantitation limit
ND = Not detected at or above the MDL
Where applicable, all soil sample analysis are reported on a dry weight basis unless flagged with a "W"
B = Detected in the method blank
J = Estimated result < PQL and ≥ MDL
E = Quantitation of compound exceeded the calibration range
P = The RPD between two GC columns exceeds 40%
N = Recovery is out of criteria
H = Out of holding time

Volatile Organic Compounds by GC/MS

Client: ARCADIS U.S., Inc.
Laboratory ID: LD09018-021
Description: F39SW-03 (040810)
Matrix: Aqueous
Date Sampled: 04/08/2010 1400
Date Received: 04/10/2010

Run	Prep Method	Analytical Method	Dilution	Analysis Date	Analyst	Prep Date	Batch
1	5030B	8260B	1	04/14/2010 1555	LBS		31526

Parameter	CAS Number	Analytical Method	Result	Q	PQL	MDL	Units	Run
Acetone	67-64-1	8260B	5.9	J	10	0.061	ug/L	1
Benzene	71-43-2	8260B	ND		0.50	0.027	ug/L	1
Bromodichloromethane	75-27-4	8260B	ND		0.50	0.17	ug/L	1
Bromoform	75-25-2	8260B	ND		0.50	0.010	ug/L	1
Bromomethane (Methyl bromide)	74-83-9	8260B	ND		0.50	0.20	ug/L	1
2-Butanone (MEK)	78-93-3	8260B	ND		10	2.0	ug/L	1
Carbon disulfide	75-15-0	8260B	ND		0.50	0.097	ug/L	1
Carbon tetrachloride	56-23-5	8260B	ND		0.50	0.085	ug/L	1
Chlorobenzene	108-90-7	8260B	ND		0.50	0.17	ug/L	1
Chloroethane	75-00-3	8260B	ND		0.50	0.17	ug/L	1
Chloroform	67-66-3	8260B	ND		0.50	0.17	ug/L	1
Chloromethane (Methyl chloride)	74-87-3	8260B	ND		0.50	0.17	ug/L	1
Cyclohexane	110-82-7	8260B	ND		0.50	0.30	ug/L	1
1,2-Dibromo-3-chloropropane (DBCP)	96-12-8	8260B	ND		0.50	0.069	ug/L	1
Dibromochloromethane	124-48-1	8260B	ND		0.50	0.17	ug/L	1
1,2-Dibromoethane (EDB)	106-93-4	8260B	ND		0.50	0.061	ug/L	1
1,3-Dichlorobenzene	541-73-1	8260B	ND		0.50	0.17	ug/L	1
1,2-Dichlorobenzene	95-50-1	8260B	ND		0.50	0.17	ug/L	1
1,4-Dichlorobenzene	106-46-7	8260B	ND		0.50	0.17	ug/L	1
Dichlorodifluoromethane	75-71-8	8260B	ND		0.50	0.071	ug/L	1
1,1-Dichloroethane	75-34-3	8260B	ND		0.50	0.054	ug/L	1
1,2-Dichloroethane	107-06-2	8260B	ND		0.50	0.023	ug/L	1
trans-1,2-Dichloroethene	156-60-5	8260B	ND		0.50	0.079	ug/L	1
1,1-Dichloroethene	75-35-4	8260B	ND		0.50	0.094	ug/L	1
cis-1,2-Dichloroethene	156-59-2	8260B	1.1		0.50	0.087	ug/L	1
1,2-Dichloropropane	78-87-5	8260B	ND		0.50	0.081	ug/L	1
trans-1,3-Dichloropropene	10061-02-6	8260B	ND		0.50	0.18	ug/L	1
cis-1,3-Dichloropropene	10061-01-5	8260B	ND		0.50	0.090	ug/L	1
Ethylbenzene	100-41-4	8260B	ND		0.50	0.17	ug/L	1
2-Hexanone	591-78-6	8260B	ND		10	0.27	ug/L	1
Isopropylbenzene	98-82-8	8260B	ND		0.50	0.029	ug/L	1
Methyl acetate	79-20-9	8260B	ND		1.0	0.30	ug/L	1
Methyl tertiary butyl ether (MTBE)	1634-04-4	8260B	ND		0.50	0.019	ug/L	1
4-Methyl-2-pentanone	108-10-1	8260B	ND		10	0.31	ug/L	1
Methylcyclohexane	108-87-2	8260B	ND		5.0	0.95	ug/L	1
Methylene chloride	75-09-2	8260B	0.20	BJ	0.50	0.17	ug/L	1
Styrene	100-42-5	8260B	ND		0.50	0.015	ug/L	1
1,1,2,2-Tetrachloroethane	79-34-5	8260B	ND		0.50	0.013	ug/L	1
Tetrachloroethene	127-18-4	8260B	0.21	J	0.50	0.014	ug/L	1
Toluene	108-88-3	8260B	ND		0.50	0.17	ug/L	1
1,1,2-Trichloro-1,2,2-Trifluoroethane	76-13-1	8260B	ND		0.50	0.30	ug/L	1
1,2,4-Trichlorobenzene	120-82-1	8260B	ND		0.50	0.17	ug/L	1
1,1,1-Trichloroethane	71-55-6	8260B	ND		0.50	0.029	ug/L	1
1,1,2-Trichloroethane	79-00-5	8260B	ND		0.50	0.031	ug/L	1

PQL = Practical quantitation limit
B = Detected in the method blank
E = Quantitation of compound exceeded the calibration range
ND = Not detected at or above the MDL
J = Estimated result < PQL and ≥ MDL
P = The RPD between two GC columns exceeds 40%
Where applicable, all soil sample analysis are reported on a dry weight basis unless flagged with a "W"
N = Recovery is out of criteria
H = Out of holding time

Volatile Organic Compounds by GC/MS

Client: ARCADIS U.S., Inc.
Laboratory ID: LD09018-021
Description: F39SW-03 (040810)
Matrix: Aqueous
Date Sampled: 04/08/2010 1400
Date Received: 04/10/2010

Run	Prep Method	Analytical Method	Dilution	Analysis Date	Analyst	Prep Date	Batch
1	5030B	8260B	1	04/14/2010 1555	LBS		31526

Parameter	CAS Number	Analytical Method	Result	Q	PQL	MDL	Units	Run
Trichloroethene	79-01-6	8260B	2.0		0.50	0.024	ug/L	1
Trichlorofluoromethane	75-69-4	8260B	ND		0.50	0.051	ug/L	1
Vinyl chloride	75-01-4	8260B	ND		0.50	0.065	ug/L	1
Xylenes (total)	1330-20-7	8260B	ND		0.50	0.17	ug/L	1

Surrogate	Q	Run 1 % Recovery	Acceptance Limits
1,2-Dichloroethane-d4		96	70-130
Bromofluorobenzene		93	70-130
Toluene-d8		104	70-130

PQL = Practical quantitation limit
B = Detected in the method blank
E = Quantitation of compound exceeded the calibration range
ND = Not detected at or above the MDL
J = Estimated result < PQL and ≥ MDL
P = The RPD between two GC columns exceeds 40%
Where applicable, all soil sample analysis are reported on a dry weight basis unless flagged with a "W"
N = Recovery is out of criteria
H = Out of holding time

Semivolatile Organic Compounds by GC/MS

Client: ARCADIS U.S., Inc.
Description: F39SW-03 (040810)
Date Sampled: 04/08/2010 1400
Date Received: 04/10/2010

Laboratory ID: LD09018-021
Matrix: Aqueous

Run	Prep Method	Analytical Method	Dilution	Analysis Date	Analyst	Prep Date	Batch
1	3520C	8270D	1	04/15/2010 1634	JGH	04/13/2010 0021	31326

Parameter	CAS Number	Analytical Method	Result	Q	PQL	MDL	Units	Run
Acenaphthene	83-32-9	8270D	ND		1.0	0.090	ug/L	1
Acenaphthylene	208-96-8	8270D	ND		1.0	0.16	ug/L	1
Acetophenone	98-86-2	8270D	ND		1.0	0.32	ug/L	1
Anthracene	120-12-7	8270D	ND		1.0	0.13	ug/L	1
Atrazine	1912-24-9	8270D	ND		1.0	0.20	ug/L	1
Benzaldehyde	100-52-7	8270D	ND		5.0	1.0	ug/L	1
Benzo(a)anthracene	56-55-3	8270D	ND		1.0	0.15	ug/L	1
Benzo(a)pyrene	50-32-8	8270D	ND		1.0	0.16	ug/L	1
Benzo(b)fluoranthene	205-99-2	8270D	ND		1.0	0.20	ug/L	1
Benzo(g,h,i)perylene	191-24-2	8270D	ND		1.0	0.23	ug/L	1
Benzo(k)fluoranthene	207-08-9	8270D	ND		1.0	0.12	ug/L	1
1,1'-Biphenyl	92-52-4	8270D	ND		1.0	0.20	ug/L	1
4-Bromophenyl phenyl ether	101-55-3	8270D	ND		1.0	0.12	ug/L	1
Butyl benzyl phthalate	85-68-7	8270D	ND		5.0	1.7	ug/L	1
Caprolactam	105-60-2	8270D	1.6	J	5.0	1.2	ug/L	1
Carbazole	86-74-8	8270D	ND		1.0	0.25	ug/L	1
4-Chloro-3-methyl phenol	59-50-7	8270D	ND		1.0	0.22	ug/L	1
4-Chloroaniline	106-47-8	8270D	ND		1.0	0.13	ug/L	1
bis(2-Chloroethoxy)methane	111-91-1	8270D	ND		1.0	0.13	ug/L	1
bis(2-Chloroethyl)ether	111-44-4	8270D	ND		1.0	0.13	ug/L	1
bis(2-Chloroisopropyl)ether	108-60-1	8270D	ND		1.0	0.080	ug/L	1
2-Chloronaphthalene	91-58-7	8270D	ND		1.0	0.12	ug/L	1
2-Chlorophenol	95-57-8	8270D	ND		1.0	0.13	ug/L	1
4-Chlorophenyl phenyl ether	7005-72-3	8270D	ND		1.0	0.11	ug/L	1
Chrysene	218-01-9	8270D	ND		1.0	0.12	ug/L	1
Dibenzo(a,h)anthracene	53-70-3	8270D	ND		1.0	0.13	ug/L	1
Dibenzofuran	132-64-9	8270D	ND		1.0	0.16	ug/L	1
3,3'-Dichlorobenzidine	91-94-1	8270D	ND		5.0	0.81	ug/L	1
2,4-Dichlorophenol	120-83-2	8270D	ND		1.0	0.15	ug/L	1
Diethylphthalate	84-66-2	8270D	ND		5.0	1.7	ug/L	1
Dimethyl phthalate	131-11-3	8270D	ND		5.0	1.7	ug/L	1
2,4-Dimethylphenol	105-67-9	8270D	ND		1.0	0.31	ug/L	1
Di-n-butyl phthalate	84-74-2	8270D	ND		5.0	1.7	ug/L	1
4,6-Dinitro-2-methylphenol	534-52-1	8270D	ND		5.0	1.5	ug/L	1
2,4-Dinitrophenol	51-28-5	8270D	ND		5.0	0.25	ug/L	1
2,4-Dinitrotoluene	121-14-2	8270D	ND		2.0	0.45	ug/L	1
2,6-Dinitrotoluene	606-20-2	8270D	ND		2.0	0.40	ug/L	1
Di-n-octylphthalate	117-84-0	8270D	ND		5.0	1.7	ug/L	1
bis(2-Ethylhexyl)phthalate	117-81-7	8270D	ND		5.0	1.7	ug/L	1
Fluoranthene	206-44-0	8270D	ND		1.0	0.21	ug/L	1
Fluorene	86-73-7	8270D	ND		1.0	0.10	ug/L	1
Hexachlorobenzene	118-74-1	8270D	ND		1.0	0.21	ug/L	1
Hexachlorobutadiene	87-68-3	8270D	ND		1.0	0.090	ug/L	1
Hexachlorocyclopentadiene	77-47-4	8270D	ND		5.0	0.23	ug/L	1

PQL = Practical quantitation limit
ND = Not detected at or above the MDL
B = Detected in the method blank
J = Estimated result < PQL and ≥ MDL
E = Quantitation of compound exceeded the calibration range
P = The RPD between two GC columns exceeds 40%
N = Recovery is out of criteria
H = Out of holding time
Where applicable, all soil sample analysis are reported on a dry weight basis unless flagged with a "W"

Semivolatile Organic Compounds by GC/MS

Client: ARCADIS U.S., Inc.
Laboratory ID: LD09018-021
Description: F39SW-03 (040810)
Matrix: Aqueous
Date Sampled: 04/08/2010 1400
Date Received: 04/10/2010

Run	Prep Method	Analytical Method	Dilution	Analysis Date	Analyst	Prep Date	Batch
1	3520C	8270D	1	04/15/2010 1634	JGH	04/13/2010 0021	31326

Parameter	CAS Number	Analytical Method	Result	Q	PQL	MDL	Units	Run
Hexachloroethane	67-72-1	8270D	ND		1.0	0.11	ug/L	1
Indeno(1,2,3-c,d)pyrene	193-39-5	8270D	ND		1.0	0.23	ug/L	1
Isophorone	78-59-1	8270D	ND		1.0	0.080	ug/L	1
2-Methylnaphthalene	91-57-6	8270D	ND		1.0	0.080	ug/L	1
2-Methylphenol	95-48-7	8270D	ND		1.0	0.17	ug/L	1
3 & 4-Methylphenol	106-44-5	8270D	ND		2.0	0.57	ug/L	1
Naphthalene	91-20-3	8270D	ND		1.0	0.070	ug/L	1
2-Nitroaniline	88-74-4	8270D	ND		2.0	0.55	ug/L	1
3-Nitroaniline	99-09-2	8270D	ND		2.0	0.77	ug/L	1
4-Nitroaniline	100-01-6	8270D	ND		2.0	0.39	ug/L	1
Nitrobenzene	98-95-3	8270D	ND		1.0	0.10	ug/L	1
2-Nitrophenol	88-75-5	8270D	ND		2.0	0.27	ug/L	1
4-Nitrophenol	100-02-7	8270D	ND		5.0	0.64	ug/L	1
N-Nitrosodi-n-propylamine	621-64-7	8270D	ND		1.0	0.080	ug/L	1
N-Nitrosodiphenylamine (Diphenylamine)	86-30-6	8270D	ND		1.0	0.38	ug/L	1
Pentachlorophenol	87-86-5	8270D	ND		5.0	0.54	ug/L	1
Phenanthrene	85-01-8	8270D	ND		1.0	0.18	ug/L	1
Phenol	108-95-2	8270D	ND		1.0	0.11	ug/L	1
Pyrene	129-00-0	8270D	ND		1.0	0.16	ug/L	1
2,4,5-Trichlorophenol	95-95-4	8270D	ND		1.0	0.18	ug/L	1
2,4,6-Trichlorophenol	88-06-2	8270D	ND		1.0	0.22	ug/L	1

Surrogate	Q	Run 1 % Recovery	Acceptance Limits
2-Fluorobiphenyl		83	37-129
2-Fluorophenol		71	24-127
Nitrobenzene-d5		83	38-127
Phenol-d5		68	28-128
Terphenyl-d14		72	10-148
2,4,6-Tribromophenol		116	41-144

PQL = Practical quantitation limit
B = Detected in the method blank
E = Quantitation of compound exceeded the calibration range
ND = Not detected at or above the MDL
J = Estimated result < PQL and ≥ MDL
P = The RPD between two GC columns exceeds 40%
Where applicable, all soil sample analysis are reported on a dry weight basis unless flagged with a "W"
N = Recovery is out of criteria
H = Out of holding time

RCRA Metals

Client: ARCADIS U.S., Inc.
Description: F39SW-03 (040810)
Date Sampled: 04/08/2010 1400
Date Received: 04/10/2010

Laboratory ID: LD09018-021
Matrix: Aqueous

Run	Prep Method	Analytical Method	Dilution	Analysis Date	Analyst	Prep Date	Batch
1	3005A	6010C	1	04/14/2010 0108	CDF	04/12/2010 1845	31332
1		7470A	1	04/12/2010 2159	BNW	04/12/2010 1645	31319
2	3005A	6010C	1	04/14/2010 1419	KJC	04/12/2010 1845	31332

Parameter	CAS Number	Analytical Method	Result	Q	PQL	MDL	Units	Run
Arsenic	7440-38-2	6010C	ND		0.010	0.0040	mg/L	1
Barium	7440-39-3	6010C	0.043		0.025	0.0075	mg/L	1
Cadmium	7440-43-9	6010C	ND		0.0020	0.00060	mg/L	1
Chromium	7440-47-3	6010C	0.0022	J	0.0050	0.0021	mg/L	1
Lead	7439-92-1	6010C	0.0067	J	0.010	0.0019	mg/L	1
Mercury	7439-97-6	7470A	ND		0.00010	0.000053	mg/L	1
Selenium	7782-49-2	6010C	ND		0.010	0.0026	mg/L	1
Silver	7440-22-4	6010C	ND		0.0050	0.00040	mg/L	2

PQL = Practical quantitation limit
ND = Not detected at or above the MDL
Where applicable, all soil sample analysis are reported on a dry weight basis unless flagged with a "W"
B = Detected in the method blank
J = Estimated result < PQL and ≥ MDL
E = Quantitation of compound exceeded the calibration range
P = The RPD between two GC columns exceeds 40%
N = Recovery is out of criteria
H = Out of holding time

Volatile Organic Compounds by GC/MS

Client: ARCADIS U.S., Inc.
Laboratory ID: LD09018-022
Description: F39SW-04 (040810)
Matrix: Aqueous
Date Sampled: 04/08/2010 1500
Date Received: 04/10/2010

Run	Prep Method	Analytical Method	Dilution	Analysis Date	Analyst	Prep Date	Batch
1	5030B	8260B	1	04/14/2010 1617	LBS		31526

Parameter	CAS Number	Analytical Method	Result	Q	PQL	MDL	Units	Run
Acetone	67-64-1	8260B	3.8	J	10	0.061	ug/L	1
Benzene	71-43-2	8260B	ND		0.50	0.027	ug/L	1
Bromodichloromethane	75-27-4	8260B	ND		0.50	0.17	ug/L	1
Bromoform	75-25-2	8260B	ND		0.50	0.010	ug/L	1
Bromomethane (Methyl bromide)	74-83-9	8260B	ND		0.50	0.20	ug/L	1
2-Butanone (MEK)	78-93-3	8260B	ND		10	2.0	ug/L	1
Carbon disulfide	75-15-0	8260B	ND		0.50	0.097	ug/L	1
Carbon tetrachloride	56-23-5	8260B	ND		0.50	0.085	ug/L	1
Chlorobenzene	108-90-7	8260B	ND		0.50	0.17	ug/L	1
Chloroethane	75-00-3	8260B	ND		0.50	0.17	ug/L	1
Chloroform	67-66-3	8260B	ND		0.50	0.17	ug/L	1
Chloromethane (Methyl chloride)	74-87-3	8260B	ND		0.50	0.17	ug/L	1
Cyclohexane	110-82-7	8260B	ND		0.50	0.30	ug/L	1
1,2-Dibromo-3-chloropropane (DBCP)	96-12-8	8260B	ND		0.50	0.069	ug/L	1
Dibromochloromethane	124-48-1	8260B	ND		0.50	0.17	ug/L	1
1,2-Dibromoethane (EDB)	106-93-4	8260B	ND		0.50	0.061	ug/L	1
1,3-Dichlorobenzene	541-73-1	8260B	ND		0.50	0.17	ug/L	1
1,2-Dichlorobenzene	95-50-1	8260B	ND		0.50	0.17	ug/L	1
1,4-Dichlorobenzene	106-46-7	8260B	ND		0.50	0.17	ug/L	1
Dichlorodifluoromethane	75-71-8	8260B	ND		0.50	0.071	ug/L	1
1,1-Dichloroethane	75-34-3	8260B	ND		0.50	0.054	ug/L	1
1,2-Dichloroethane	107-06-2	8260B	ND		0.50	0.023	ug/L	1
trans-1,2-Dichloroethene	156-60-5	8260B	ND		0.50	0.079	ug/L	1
1,1-Dichloroethene	75-35-4	8260B	ND		0.50	0.094	ug/L	1
cis-1,2-Dichloroethene	156-59-2	8260B	0.43	J	0.50	0.087	ug/L	1
1,2-Dichloropropane	78-87-5	8260B	ND		0.50	0.081	ug/L	1
trans-1,3-Dichloropropene	10061-02-6	8260B	ND		0.50	0.18	ug/L	1
cis-1,3-Dichloropropene	10061-01-5	8260B	ND		0.50	0.090	ug/L	1
Ethylbenzene	100-41-4	8260B	ND		0.50	0.17	ug/L	1
2-Hexanone	591-78-6	8260B	ND		10	0.27	ug/L	1
Isopropylbenzene	98-82-8	8260B	ND		0.50	0.029	ug/L	1
Methyl acetate	79-20-9	8260B	ND		1.0	0.30	ug/L	1
Methyl tertiary butyl ether (MTBE)	1634-04-4	8260B	ND		0.50	0.019	ug/L	1
4-Methyl-2-pentanone	108-10-1	8260B	ND		10	0.31	ug/L	1
Methylcyclohexane	108-87-2	8260B	ND		5.0	0.95	ug/L	1
Methylene chloride	75-09-2	8260B	0.22	BJ	0.50	0.17	ug/L	1
Styrene	100-42-5	8260B	ND		0.50	0.015	ug/L	1
1,1,2,2-Tetrachloroethane	79-34-5	8260B	ND		0.50	0.013	ug/L	1
Tetrachloroethene	127-18-4	8260B	1.1		0.50	0.014	ug/L	1
Toluene	108-88-3	8260B	ND		0.50	0.17	ug/L	1
1,1,2-Trichloro-1,2,2-Trifluoroethane	76-13-1	8260B	ND		0.50	0.30	ug/L	1
1,2,4-Trichlorobenzene	120-82-1	8260B	ND		0.50	0.17	ug/L	1
1,1,1-Trichloroethane	71-55-6	8260B	ND		0.50	0.029	ug/L	1
1,1,2-Trichloroethane	79-00-5	8260B	ND		0.50	0.031	ug/L	1

PQL = Practical quantitation limit
B = Detected in the method blank
E = Quantitation of compound exceeded the calibration range
ND = Not detected at or above the MDL
J = Estimated result < PQL and ≥ MDL
P = The RPD between two GC columns exceeds 40%
Where applicable, all soil sample analysis are reported on a dry weight basis unless flagged with a "W"
N = Recovery is out of criteria
H = Out of holding time

Volatile Organic Compounds by GC/MS

Client: ARCADIS U.S., Inc.
Laboratory ID: LD09018-022
Description: F39SW-04 (040810)
Matrix: Aqueous
Date Sampled: 04/08/2010 1500
Date Received: 04/10/2010

Run	Prep Method	Analytical Method	Dilution	Analysis Date	Analyst	Prep Date	Batch
1	5030B	8260B	1	04/14/2010 1617	LBS		31526

Parameter	CAS Number	Analytical Method	Result	Q	PQL	MDL	Units	Run
Trichloroethene	79-01-6	8260B	4.5		0.50	0.024	ug/L	1
Trichlorofluoromethane	75-69-4	8260B	ND		0.50	0.051	ug/L	1
Vinyl chloride	75-01-4	8260B	ND		0.50	0.065	ug/L	1
Xylenes (total)	1330-20-7	8260B	ND		0.50	0.17	ug/L	1

Surrogate	Q	Run 1 % Recovery	Acceptance Limits
1,2-Dichloroethane-d4		95	70-130
Bromofluorobenzene		92	70-130
Toluene-d8		104	70-130

PQL = Practical quantitation limit
B = Detected in the method blank
E = Quantitation of compound exceeded the calibration range
ND = Not detected at or above the MDL
J = Estimated result < PQL and ≥ MDL
P = The RPD between two GC columns exceeds 40%
Where applicable, all soil sample analysis are reported on a dry weight basis unless flagged with a "W"
N = Recovery is out of criteria
H = Out of holding time

Semivolatile Organic Compounds by GC/MS

Client: ARCADIS U.S., Inc.
Description: F39SW-04 (040810)
Date Sampled: 04/08/2010 1500
Date Received: 04/10/2010

Laboratory ID: LD09018-022
Matrix: Aqueous

Run	Prep Method	Analytical Method	Dilution	Analysis Date	Analyst	Prep Date	Batch
1	3520C	8270D	1	04/15/2010 1732	JGH	04/13/2010 0021	31326

Parameter	CAS Number	Analytical Method	Result	Q	PQL	MDL	Units	Run
Acenaphthene	83-32-9	8270D	ND		1.0	0.090	ug/L	1
Acenaphthylene	208-96-8	8270D	ND		1.0	0.16	ug/L	1
Acetophenone	98-86-2	8270D	ND		1.0	0.32	ug/L	1
Anthracene	120-12-7	8270D	ND		1.0	0.13	ug/L	1
Atrazine	1912-24-9	8270D	ND		1.0	0.20	ug/L	1
Benzaldehyde	100-52-7	8270D	ND		5.0	1.0	ug/L	1
Benzo(a)anthracene	56-55-3	8270D	ND		1.0	0.15	ug/L	1
Benzo(a)pyrene	50-32-8	8270D	ND		1.0	0.16	ug/L	1
Benzo(b)fluoranthene	205-99-2	8270D	ND		1.0	0.20	ug/L	1
Benzo(g,h,i)perylene	191-24-2	8270D	ND		1.0	0.23	ug/L	1
Benzo(k)fluoranthene	207-08-9	8270D	ND		1.0	0.12	ug/L	1
1,1'-Biphenyl	92-52-4	8270D	ND		1.0	0.20	ug/L	1
4-Bromophenyl phenyl ether	101-55-3	8270D	ND		1.0	0.12	ug/L	1
Butyl benzyl phthalate	85-68-7	8270D	ND		5.0	1.7	ug/L	1
Caprolactam	105-60-2	8270D	2.6	J	5.0	1.2	ug/L	1
Carbazole	86-74-8	8270D	ND		1.0	0.25	ug/L	1
4-Chloro-3-methyl phenol	59-50-7	8270D	ND		1.0	0.22	ug/L	1
4-Chloroaniline	106-47-8	8270D	ND		1.0	0.13	ug/L	1
bis(2-Chloroethoxy)methane	111-91-1	8270D	ND		1.0	0.13	ug/L	1
bis(2-Chloroethyl)ether	111-44-4	8270D	ND		1.0	0.13	ug/L	1
bis(2-Chloroisopropyl)ether	108-60-1	8270D	ND		1.0	0.080	ug/L	1
2-Chloronaphthalene	91-58-7	8270D	ND		1.0	0.12	ug/L	1
2-Chlorophenol	95-57-8	8270D	ND		1.0	0.13	ug/L	1
4-Chlorophenyl phenyl ether	7005-72-3	8270D	ND		1.0	0.11	ug/L	1
Chrysene	218-01-9	8270D	ND		1.0	0.12	ug/L	1
Dibenzo(a,h)anthracene	53-70-3	8270D	ND		1.0	0.13	ug/L	1
Dibenzofuran	132-64-9	8270D	ND		1.0	0.16	ug/L	1
3,3'-Dichlorobenzidine	91-94-1	8270D	ND		5.0	0.81	ug/L	1
2,4-Dichlorophenol	120-83-2	8270D	ND		1.0	0.15	ug/L	1
Diethylphthalate	84-66-2	8270D	ND		5.0	1.7	ug/L	1
Dimethyl phthalate	131-11-3	8270D	ND		5.0	1.7	ug/L	1
2,4-Dimethylphenol	105-67-9	8270D	ND		1.0	0.31	ug/L	1
Di-n-butyl phthalate	84-74-2	8270D	ND		5.0	1.7	ug/L	1
4,6-Dinitro-2-methylphenol	534-52-1	8270D	ND		5.0	1.5	ug/L	1
2,4-Dinitrophenol	51-28-5	8270D	ND		5.0	0.25	ug/L	1
2,4-Dinitrotoluene	121-14-2	8270D	ND		2.0	0.45	ug/L	1
2,6-Dinitrotoluene	606-20-2	8270D	ND		2.0	0.40	ug/L	1
Di-n-octylphthalate	117-84-0	8270D	ND		5.0	1.7	ug/L	1
bis(2-Ethylhexyl)phthalate	117-81-7	8270D	ND		5.0	1.7	ug/L	1
Fluoranthene	206-44-0	8270D	ND		1.0	0.21	ug/L	1
Fluorene	86-73-7	8270D	ND		1.0	0.10	ug/L	1
Hexachlorobenzene	118-74-1	8270D	ND		1.0	0.21	ug/L	1
Hexachlorobutadiene	87-68-3	8270D	ND		1.0	0.090	ug/L	1
Hexachlorocyclopentadiene	77-47-4	8270D	ND		5.0	0.23	ug/L	1

PQL = Practical quantitation limit
ND = Not detected at or above the MDL
Where applicable, all soil sample analysis are reported on a dry weight basis unless flagged with a "W"
B = Detected in the method blank
J = Estimated result < PQL and ≥ MDL
E = Quantitation of compound exceeded the calibration range
P = The RPD between two GC columns exceeds 40%
N = Recovery is out of criteria
H = Out of holding time

Semivolatile Organic Compounds by GC/MS

Client: ARCADIS U.S., Inc.
Laboratory ID: LD09018-022
Description: F39SW-04 (040810)
Matrix: Aqueous
Date Sampled: 04/08/2010 1500
Date Received: 04/10/2010

Run	Prep Method	Analytical Method	Dilution	Analysis Date	Analyst	Prep Date	Batch
1	3520C	8270D	1	04/15/2010 1732	JGH	04/13/2010 0021	31326

Parameter	CAS Number	Analytical Method	Result	Q	PQL	MDL	Units	Run
Hexachloroethane	67-72-1	8270D	ND		1.0	0.11	ug/L	1
Indeno(1,2,3-c,d)pyrene	193-39-5	8270D	ND		1.0	0.23	ug/L	1
Isophorone	78-59-1	8270D	ND		1.0	0.080	ug/L	1
2-Methylnaphthalene	91-57-6	8270D	ND		1.0	0.080	ug/L	1
2-Methylphenol	95-48-7	8270D	ND		1.0	0.17	ug/L	1
3 & 4-Methylphenol	106-44-5	8270D	ND		2.0	0.57	ug/L	1
Naphthalene	91-20-3	8270D	ND		1.0	0.070	ug/L	1
2-Nitroaniline	88-74-4	8270D	ND		2.0	0.55	ug/L	1
3-Nitroaniline	99-09-2	8270D	ND		2.0	0.77	ug/L	1
4-Nitroaniline	100-01-6	8270D	ND		2.0	0.39	ug/L	1
Nitrobenzene	98-95-3	8270D	ND		1.0	0.10	ug/L	1
2-Nitrophenol	88-75-5	8270D	ND		2.0	0.27	ug/L	1
4-Nitrophenol	100-02-7	8270D	ND		5.0	0.64	ug/L	1
N-Nitrosodi-n-propylamine	621-64-7	8270D	ND		1.0	0.080	ug/L	1
N-Nitrosodiphenylamine (Diphenylamine)	86-30-6	8270D	ND		1.0	0.38	ug/L	1
Pentachlorophenol	87-86-5	8270D	ND		5.0	0.54	ug/L	1
Phenanthrene	85-01-8	8270D	ND		1.0	0.18	ug/L	1
Phenol	108-95-2	8270D	ND		1.0	0.11	ug/L	1
Pyrene	129-00-0	8270D	ND		1.0	0.16	ug/L	1
2,4,5-Trichlorophenol	95-95-4	8270D	ND		1.0	0.18	ug/L	1
2,4,6-Trichlorophenol	88-06-2	8270D	ND		1.0	0.22	ug/L	1

Surrogate	Q	Run 1 % Recovery	Acceptance Limits
2-Fluorobiphenyl		78	37-129
2-Fluorophenol		69	24-127
Nitrobenzene-d5		79	38-127
Phenol-d5		67	28-128
Terphenyl-d14		57	10-148
2,4,6-Tribromophenol		103	41-144

PQL = Practical quantitation limit
B = Detected in the method blank
E = Quantitation of compound exceeded the calibration range
ND = Not detected at or above the MDL
J = Estimated result < PQL and ≥ MDL
P = The RPD between two GC columns exceeds 40%
Where applicable, all soil sample analysis are reported on a dry weight basis unless flagged with a "W"
N = Recovery is out of criteria
H = Out of holding time

RCRA Metals

Client: ARCADIS U.S., Inc.
Description: F39SW-04 (040810)
Date Sampled: 04/08/2010 1500
Date Received: 04/10/2010

Laboratory ID: LD09018-022
Matrix: Aqueous

Run	Prep Method	Analytical Method	Dilution	Analysis Date	Analyst	Prep Date	Batch
1	3005A	6010C	1	04/14/2010 0112	CDF	04/12/2010 1845	31332
1		7470A	1	04/12/2010 2207	BNW	04/12/2010 1645	31319
2	3005A	6010C	1	04/14/2010 1425	KJC	04/12/2010 1845	31332

Parameter	CAS Number	Analytical Method	Result	Q	PQL	MDL	Units	Run
Arsenic	7440-38-2	6010C	0.017	B	0.010	0.0040	mg/L	1
Barium	7440-39-3	6010C	0.047		0.025	0.0075	mg/L	1
Cadmium	7440-43-9	6010C	ND		0.0020	0.00060	mg/L	1
Chromium	7440-47-3	6010C	0.0033	J	0.0050	0.0021	mg/L	1
Lead	7439-92-1	6010C	0.0092	J	0.010	0.0019	mg/L	1
Mercury	7439-97-6	7470A	ND		0.00010	0.000053	mg/L	1
Selenium	7782-49-2	6010C	ND		0.010	0.0026	mg/L	1
Silver	7440-22-4	6010C	ND		0.0050	0.00040	mg/L	2

PQL = Practical quantitation limit
ND = Not detected at or above the MDL
Where applicable, all soil sample analysis are reported on a dry weight basis unless flagged with a "W"
B = Detected in the method blank
J = Estimated result < PQL and ≥ MDL
E = Quantitation of compound exceeded the calibration range
P = The RPD between two GC columns exceeds 40%
N = Recovery is out of criteria
H = Out of holding time

Volatile Organic Compounds by GC/MS

Client: ARCADIS U.S., Inc.
Laboratory ID: LD09018-023
Description: F39SW-05 (040810)
Matrix: Aqueous
Date Sampled: 04/08/2010 1600
Date Received: 04/10/2010

Run	Prep Method	Analytical Method	Dilution	Analysis Date	Analyst	Prep Date	Batch
1	5030B	8260B	1	04/14/2010 1639	LBS		31526

Parameter	CAS Number	Analytical Method	Result	Q	PQL	MDL	Units	Run
Acetone	67-64-1	8260B	7.5	J	10	0.061	ug/L	1
Benzene	71-43-2	8260B	ND		0.50	0.027	ug/L	1
Bromodichloromethane	75-27-4	8260B	ND		0.50	0.17	ug/L	1
Bromoform	75-25-2	8260B	ND		0.50	0.010	ug/L	1
Bromomethane (Methyl bromide)	74-83-9	8260B	ND		0.50	0.20	ug/L	1
2-Butanone (MEK)	78-93-3	8260B	ND		10	2.0	ug/L	1
Carbon disulfide	75-15-0	8260B	ND		0.50	0.097	ug/L	1
Carbon tetrachloride	56-23-5	8260B	ND		0.50	0.085	ug/L	1
Chlorobenzene	108-90-7	8260B	ND		0.50	0.17	ug/L	1
Chloroethane	75-00-3	8260B	ND		0.50	0.17	ug/L	1
Chloroform	67-66-3	8260B	ND		0.50	0.17	ug/L	1
Chloromethane (Methyl chloride)	74-87-3	8260B	ND		0.50	0.17	ug/L	1
Cyclohexane	110-82-7	8260B	ND		0.50	0.30	ug/L	1
1,2-Dibromo-3-chloropropane (DBCP)	96-12-8	8260B	ND		0.50	0.069	ug/L	1
Dibromochloromethane	124-48-1	8260B	ND		0.50	0.17	ug/L	1
1,2-Dibromoethane (EDB)	106-93-4	8260B	ND		0.50	0.061	ug/L	1
1,3-Dichlorobenzene	541-73-1	8260B	ND		0.50	0.17	ug/L	1
1,2-Dichlorobenzene	95-50-1	8260B	ND		0.50	0.17	ug/L	1
1,4-Dichlorobenzene	106-46-7	8260B	ND		0.50	0.17	ug/L	1
Dichlorodifluoromethane	75-71-8	8260B	ND		0.50	0.071	ug/L	1
1,1-Dichloroethane	75-34-3	8260B	ND		0.50	0.054	ug/L	1
1,2-Dichloroethane	107-06-2	8260B	ND		0.50	0.023	ug/L	1
trans-1,2-Dichloroethene	156-60-5	8260B	ND		0.50	0.079	ug/L	1
1,1-Dichloroethene	75-35-4	8260B	ND		0.50	0.094	ug/L	1
cis-1,2-Dichloroethene	156-59-2	8260B	0.74		0.50	0.087	ug/L	1
1,2-Dichloropropane	78-87-5	8260B	ND		0.50	0.081	ug/L	1
trans-1,3-Dichloropropene	10061-02-6	8260B	ND		0.50	0.18	ug/L	1
cis-1,3-Dichloropropene	10061-01-5	8260B	ND		0.50	0.090	ug/L	1
Ethylbenzene	100-41-4	8260B	ND		0.50	0.17	ug/L	1
2-Hexanone	591-78-6	8260B	ND		10	0.27	ug/L	1
Isopropylbenzene	98-82-8	8260B	ND		0.50	0.029	ug/L	1
Methyl acetate	79-20-9	8260B	ND		1.0	0.30	ug/L	1
Methyl tertiary butyl ether (MTBE)	1634-04-4	8260B	ND		0.50	0.019	ug/L	1
4-Methyl-2-pentanone	108-10-1	8260B	ND		10	0.31	ug/L	1
Methylcyclohexane	108-87-2	8260B	ND		5.0	0.95	ug/L	1
Methylene chloride	75-09-2	8260B	0.25	BJ	0.50	0.17	ug/L	1
Styrene	100-42-5	8260B	ND		0.50	0.015	ug/L	1
1,1,2,2-Tetrachloroethane	79-34-5	8260B	ND		0.50	0.013	ug/L	1
Tetrachloroethene	127-18-4	8260B	1.3		0.50	0.014	ug/L	1
Toluene	108-88-3	8260B	ND		0.50	0.17	ug/L	1
1,1,2-Trichloro-1,2,2-Trifluoroethane	76-13-1	8260B	ND		0.50	0.30	ug/L	1
1,2,4-Trichlorobenzene	120-82-1	8260B	ND		0.50	0.17	ug/L	1
1,1,1-Trichloroethane	71-55-6	8260B	ND		0.50	0.029	ug/L	1
1,1,2-Trichloroethane	79-00-5	8260B	ND		0.50	0.031	ug/L	1

PQL = Practical quantitation limit
B = Detected in the method blank
E = Quantitation of compound exceeded the calibration range
ND = Not detected at or above the MDL
J = Estimated result < PQL and ≥ MDL
P = The RPD between two GC columns exceeds 40%
Where applicable, all soil sample analysis are reported on a dry weight basis unless flagged with a "W"
N = Recovery is out of criteria
H = Out of holding time

Volatile Organic Compounds by GC/MS

Client: ARCADIS U.S., Inc.
Laboratory ID: LD09018-023
Description: F39SW-05 (040810)
Matrix: Aqueous
Date Sampled: 04/08/2010 1600
Date Received: 04/10/2010

Run	Prep Method	Analytical Method	Dilution	Analysis Date	Analyst	Prep Date	Batch
1	5030B	8260B	1	04/14/2010 1639	LBS		31526

Parameter	CAS Number	Analytical Method	Result	Q	PQL	MDL	Units	Run
Trichloroethene	79-01-6	8260B	4.8		0.50	0.024	ug/L	1
Trichlorofluoromethane	75-69-4	8260B	ND		0.50	0.051	ug/L	1
Vinyl chloride	75-01-4	8260B	ND		0.50	0.065	ug/L	1
Xylenes (total)	1330-20-7	8260B	ND		0.50	0.17	ug/L	1

Surrogate	Q	Run 1 % Recovery	Acceptance Limits
1,2-Dichloroethane-d4		96	70-130
Bromofluorobenzene		92	70-130
Toluene-d8		102	70-130

PQL = Practical quantitation limit
B = Detected in the method blank
E = Quantitation of compound exceeded the calibration range
ND = Not detected at or above the MDL
J = Estimated result < PQL and ≥ MDL
P = The RPD between two GC columns exceeds 40%
Where applicable, all soil sample analysis are reported on a dry weight basis unless flagged with a "W"
N = Recovery is out of criteria
H = Out of holding time

Semivolatile Organic Compounds by GC/MS

Client: ARCADIS U.S., Inc.
Laboratory ID: LD09018-023
Description: F39SW-05 (040810)
Matrix: Aqueous
Date Sampled: 04/08/2010 1600
Date Received: 04/10/2010

Run	Prep Method	Analytical Method	Dilution	Analysis Date	Analyst	Prep Date	Batch
1	3520C	8270D	1	04/15/2010 1752	JGH	04/13/2010 0021	31326

Parameter	CAS Number	Analytical Method	Result	Q	PQL	MDL	Units	Run
Acenaphthene	83-32-9	8270D	ND		1.0	0.090	ug/L	1
Acenaphthylene	208-96-8	8270D	ND		1.0	0.16	ug/L	1
Acetophenone	98-86-2	8270D	ND		1.0	0.32	ug/L	1
Anthracene	120-12-7	8270D	ND		1.0	0.13	ug/L	1
Atrazine	1912-24-9	8270D	ND		1.0	0.20	ug/L	1
Benzaldehyde	100-52-7	8270D	ND		5.0	1.0	ug/L	1
Benzo(a)anthracene	56-55-3	8270D	ND		1.0	0.15	ug/L	1
Benzo(a)pyrene	50-32-8	8270D	ND		1.0	0.16	ug/L	1
Benzo(b)fluoranthene	205-99-2	8270D	ND		1.0	0.20	ug/L	1
Benzo(g,h,i)perylene	191-24-2	8270D	ND		1.0	0.23	ug/L	1
Benzo(k)fluoranthene	207-08-9	8270D	ND		1.0	0.12	ug/L	1
1,1'-Biphenyl	92-52-4	8270D	ND		1.0	0.20	ug/L	1
4-Bromophenyl phenyl ether	101-55-3	8270D	ND		1.0	0.12	ug/L	1
Butyl benzyl phthalate	85-68-7	8270D	ND		5.0	1.7	ug/L	1
Caprolactam	105-60-2	8270D	1.9	J	5.0	1.2	ug/L	1
Carbazole	86-74-8	8270D	ND		1.0	0.25	ug/L	1
4-Chloro-3-methyl phenol	59-50-7	8270D	ND		1.0	0.22	ug/L	1
4-Chloroaniline	106-47-8	8270D	ND		1.0	0.13	ug/L	1
bis(2-Chloroethoxy)methane	111-91-1	8270D	ND		1.0	0.13	ug/L	1
bis(2-Chloroethyl)ether	111-44-4	8270D	ND		1.0	0.13	ug/L	1
bis(2-Chloroisopropyl)ether	108-60-1	8270D	ND		1.0	0.080	ug/L	1
2-Chloronaphthalene	91-58-7	8270D	ND		1.0	0.12	ug/L	1
2-Chlorophenol	95-57-8	8270D	ND		1.0	0.13	ug/L	1
4-Chlorophenyl phenyl ether	7005-72-3	8270D	ND		1.0	0.11	ug/L	1
Chrysene	218-01-9	8270D	ND		1.0	0.12	ug/L	1
Dibenzo(a,h)anthracene	53-70-3	8270D	ND		1.0	0.13	ug/L	1
Dibenzofuran	132-64-9	8270D	ND		1.0	0.16	ug/L	1
3,3'-Dichlorobenzidine	91-94-1	8270D	ND		5.0	0.81	ug/L	1
2,4-Dichlorophenol	120-83-2	8270D	ND		1.0	0.15	ug/L	1
Diethylphthalate	84-66-2	8270D	ND		5.0	1.7	ug/L	1
Dimethyl phthalate	131-11-3	8270D	ND		5.0	1.7	ug/L	1
2,4-Dimethylphenol	105-67-9	8270D	ND		1.0	0.31	ug/L	1
Di-n-butyl phthalate	84-74-2	8270D	ND		5.0	1.7	ug/L	1
4,6-Dinitro-2-methylphenol	534-52-1	8270D	ND		5.0	1.5	ug/L	1
2,4-Dinitrophenol	51-28-5	8270D	ND		5.0	0.25	ug/L	1
2,4-Dinitrotoluene	121-14-2	8270D	ND		2.0	0.45	ug/L	1
2,6-Dinitrotoluene	606-20-2	8270D	ND		2.0	0.40	ug/L	1
Di-n-octylphthalate	117-84-0	8270D	ND		5.0	1.7	ug/L	1
bis(2-Ethylhexyl)phthalate	117-81-7	8270D	ND		5.0	1.7	ug/L	1
Fluoranthene	206-44-0	8270D	ND		1.0	0.21	ug/L	1
Fluorene	86-73-7	8270D	ND		1.0	0.10	ug/L	1
Hexachlorobenzene	118-74-1	8270D	ND		1.0	0.21	ug/L	1
Hexachlorobutadiene	87-68-3	8270D	ND		1.0	0.090	ug/L	1
Hexachlorocyclopentadiene	77-47-4	8270D	ND		5.0	0.23	ug/L	1

PQL = Practical quantitation limit
B = Detected in the method blank
E = Quantitation of compound exceeded the calibration range
ND = Not detected at or above the MDL
J = Estimated result < PQL and ≥ MDL
P = The RPD between two GC columns exceeds 40%
Where applicable, all soil sample analysis are reported on a dry weight basis unless flagged with a "W"
N = Recovery is out of criteria
H = Out of holding time

Semivolatile Organic Compounds by GC/MS

Client: ARCADIS U.S., Inc.
Laboratory ID: LD09018-023
Description: F39SW-05 (040810)
Matrix: Aqueous
Date Sampled: 04/08/2010 1600
Date Received: 04/10/2010

Run	Prep Method	Analytical Method	Dilution	Analysis Date	Analyst	Prep Date	Batch
1	3520C	8270D	1	04/15/2010 1752	JGH	04/13/2010 0021	31326

Parameter	CAS Number	Analytical Method	Result	Q	PQL	MDL	Units	Run
Hexachloroethane	67-72-1	8270D	ND		1.0	0.11	ug/L	1
Indeno(1,2,3-c,d)pyrene	193-39-5	8270D	ND		1.0	0.23	ug/L	1
Isophorone	78-59-1	8270D	ND		1.0	0.080	ug/L	1
2-Methylnaphthalene	91-57-6	8270D	ND		1.0	0.080	ug/L	1
2-Methylphenol	95-48-7	8270D	ND		1.0	0.17	ug/L	1
3 & 4-Methylphenol	106-44-5	8270D	ND		2.0	0.57	ug/L	1
Naphthalene	91-20-3	8270D	ND		1.0	0.070	ug/L	1
2-Nitroaniline	88-74-4	8270D	ND		2.0	0.55	ug/L	1
3-Nitroaniline	99-09-2	8270D	ND		2.0	0.77	ug/L	1
4-Nitroaniline	100-01-6	8270D	ND		2.0	0.39	ug/L	1
Nitrobenzene	98-95-3	8270D	ND		1.0	0.10	ug/L	1
2-Nitrophenol	88-75-5	8270D	ND		2.0	0.27	ug/L	1
4-Nitrophenol	100-02-7	8270D	ND		5.0	0.64	ug/L	1
N-Nitrosodi-n-propylamine	621-64-7	8270D	ND		1.0	0.080	ug/L	1
N-Nitrosodiphenylamine (Diphenylamine)	86-30-6	8270D	ND		1.0	0.38	ug/L	1
Pentachlorophenol	87-86-5	8270D	ND		5.0	0.54	ug/L	1
Phenanthrene	85-01-8	8270D	ND		1.0	0.18	ug/L	1
Phenol	108-95-2	8270D	ND		1.0	0.11	ug/L	1
Pyrene	129-00-0	8270D	ND		1.0	0.16	ug/L	1
2,4,5-Trichlorophenol	95-95-4	8270D	ND		1.0	0.18	ug/L	1
2,4,6-Trichlorophenol	88-06-2	8270D	ND		1.0	0.22	ug/L	1

Surrogate	Q	Run 1 % Recovery	Acceptance Limits
2-Fluorobiphenyl		79	37-129
2-Fluorophenol		70	24-127
Nitrobenzene-d5		83	38-127
Phenol-d5		70	28-128
Terphenyl-d14		38	10-148
2,4,6-Tribromophenol		113	41-144

PQL = Practical quantitation limit
B = Detected in the method blank
E = Quantitation of compound exceeded the calibration range
ND = Not detected at or above the MDL
J = Estimated result < PQL and ≥ MDL
P = The RPD between two GC columns exceeds 40%
Where applicable, all soil sample analysis are reported on a dry weight basis unless flagged with a "W"
N = Recovery is out of criteria
H = Out of holding time

RCRA Metals

Client: ARCADIS U.S., Inc.
Description: F39SW-05 (040810)
Date Sampled: 04/08/2010 1600
Date Received: 04/10/2010

Laboratory ID: LD09018-023
Matrix: Aqueous

Run	Prep Method	Analytical Method	Dilution	Analysis Date	Analyst	Prep Date	Batch
1	3005A	6010C	1	04/14/2010 0127	CDF	04/12/2010 1845	31332
1		7470A	1	04/12/2010 2209	BNW	04/12/2010 1645	31319
2	3005A	6010C	1	04/14/2010 1431	KJC	04/12/2010 1845	31332

Parameter	CAS Number	Analytical Method	Result	Q	PQL	MDL	Units	Run
Arsenic	7440-38-2	6010C	0.019	B	0.010	0.0040	mg/L	1
Barium	7440-39-3	6010C	0.049		0.025	0.0075	mg/L	1
Cadmium	7440-43-9	6010C	ND		0.0020	0.00060	mg/L	1
Chromium	7440-47-3	6010C	ND		0.0050	0.0021	mg/L	1
Lead	7439-92-1	6010C	0.0067	J	0.010	0.0019	mg/L	1
Mercury	7439-97-6	7470A	0.000084	J	0.00010	0.000053	mg/L	1
Selenium	7782-49-2	6010C	ND		0.010	0.0026	mg/L	1
Silver	7440-22-4	6010C	ND		0.0050	0.00040	mg/L	2

PQL = Practical quantitation limit
ND = Not detected at or above the MDL
Where applicable, all soil sample analysis are reported on a dry weight basis unless flagged with a "W"
B = Detected in the method blank
J = Estimated result < PQL and ≥ MDL
E = Quantitation of compound exceeded the calibration range
P = The RPD between two GC columns exceeds 40%
N = Recovery is out of criteria
H = Out of holding time

Volatile Organic Compounds by GC/MS

Client: ARCADIS U.S., Inc.
Laboratory ID: LD09018-024
Description: F39SW-06 (040810)
Matrix: Aqueous
Date Sampled: 04/08/2010 1630
Date Received: 04/10/2010

Run	Prep Method	Analytical Method	Dilution	Analysis Date	Analyst	Prep Date	Batch
1	5030B	8260B	1	04/14/2010 1701	LBS		31526

Parameter	CAS Number	Analytical Method	Result	Q	PQL	MDL	Units	Run
Acetone	67-64-1	8260B	14		10	0.061	ug/L	1
Benzene	71-43-2	8260B	ND		0.50	0.027	ug/L	1
Bromodichloromethane	75-27-4	8260B	ND		0.50	0.17	ug/L	1
Bromoform	75-25-2	8260B	ND		0.50	0.010	ug/L	1
Bromomethane (Methyl bromide)	74-83-9	8260B	ND		0.50	0.20	ug/L	1
2-Butanone (MEK)	78-93-3	8260B	ND		10	2.0	ug/L	1
Carbon disulfide	75-15-0	8260B	ND		0.50	0.097	ug/L	1
Carbon tetrachloride	56-23-5	8260B	ND		0.50	0.085	ug/L	1
Chlorobenzene	108-90-7	8260B	ND		0.50	0.17	ug/L	1
Chloroethane	75-00-3	8260B	ND		0.50	0.17	ug/L	1
Chloroform	67-66-3	8260B	ND		0.50	0.17	ug/L	1
Chloromethane (Methyl chloride)	74-87-3	8260B	ND		0.50	0.17	ug/L	1
Cyclohexane	110-82-7	8260B	ND		0.50	0.30	ug/L	1
1,2-Dibromo-3-chloropropane (DBCP)	96-12-8	8260B	ND		0.50	0.069	ug/L	1
Dibromochloromethane	124-48-1	8260B	ND		0.50	0.17	ug/L	1
1,2-Dibromoethane (EDB)	106-93-4	8260B	ND		0.50	0.061	ug/L	1
1,3-Dichlorobenzene	541-73-1	8260B	ND		0.50	0.17	ug/L	1
1,2-Dichlorobenzene	95-50-1	8260B	ND		0.50	0.17	ug/L	1
1,4-Dichlorobenzene	106-46-7	8260B	ND		0.50	0.17	ug/L	1
Dichlorodifluoromethane	75-71-8	8260B	ND		0.50	0.071	ug/L	1
1,1-Dichloroethane	75-34-3	8260B	ND		0.50	0.054	ug/L	1
1,2-Dichloroethane	107-06-2	8260B	ND		0.50	0.023	ug/L	1
trans-1,2-Dichloroethene	156-60-5	8260B	ND		0.50	0.079	ug/L	1
1,1-Dichloroethene	75-35-4	8260B	ND		0.50	0.094	ug/L	1
cis-1,2-Dichloroethene	156-59-2	8260B	0.23	J	0.50	0.087	ug/L	1
1,2-Dichloropropane	78-87-5	8260B	ND		0.50	0.081	ug/L	1
trans-1,3-Dichloropropene	10061-02-6	8260B	ND		0.50	0.18	ug/L	1
cis-1,3-Dichloropropene	10061-01-5	8260B	ND		0.50	0.090	ug/L	1
Ethylbenzene	100-41-4	8260B	ND		0.50	0.17	ug/L	1
2-Hexanone	591-78-6	8260B	ND		10	0.27	ug/L	1
Isopropylbenzene	98-82-8	8260B	ND		0.50	0.029	ug/L	1
Methyl acetate	79-20-9	8260B	ND		1.0	0.30	ug/L	1
Methyl tertiary butyl ether (MTBE)	1634-04-4	8260B	ND		0.50	0.019	ug/L	1
4-Methyl-2-pentanone	108-10-1	8260B	ND		10	0.31	ug/L	1
Methylcyclohexane	108-87-2	8260B	ND		5.0	0.95	ug/L	1
Methylene chloride	75-09-2	8260B	0.21	BJ	0.50	0.17	ug/L	1
Styrene	100-42-5	8260B	ND		0.50	0.015	ug/L	1
1,1,2,2-Tetrachloroethane	79-34-5	8260B	ND		0.50	0.013	ug/L	1
Tetrachloroethene	127-18-4	8260B	0.61		0.50	0.014	ug/L	1
Toluene	108-88-3	8260B	ND		0.50	0.17	ug/L	1
1,1,2-Trichloro-1,2,2-Trifluoroethane	76-13-1	8260B	ND		0.50	0.30	ug/L	1
1,2,4-Trichlorobenzene	120-82-1	8260B	ND		0.50	0.17	ug/L	1
1,1,1-Trichloroethane	71-55-6	8260B	ND		0.50	0.029	ug/L	1
1,1,2-Trichloroethane	79-00-5	8260B	ND		0.50	0.031	ug/L	1

PQL = Practical quantitation limit
B = Detected in the method blank
E = Quantitation of compound exceeded the calibration range
ND = Not detected at or above the MDL
J = Estimated result < PQL and ≥ MDL
P = The RPD between two GC columns exceeds 40%
Where applicable, all soil sample analysis are reported on a dry weight basis unless flagged with a "W"
N = Recovery is out of criteria
H = Out of holding time

Volatile Organic Compounds by GC/MS

Client: ARCADIS U.S., Inc.
Laboratory ID: LD09018-024
Description: F39SW-06 (040810)
Matrix: Aqueous
Date Sampled: 04/08/2010 1630
Date Received: 04/10/2010

Run	Prep Method	Analytical Method	Dilution	Analysis Date	Analyst	Prep Date	Batch
1	5030B	8260B	1	04/14/2010 1701	LBS		31526

Parameter	CAS Number	Analytical Method	Result	Q	PQL	MDL	Units	Run
Trichloroethene	79-01-6	8260B	2.3		0.50	0.024	ug/L	1
Trichlorofluoromethane	75-69-4	8260B	ND		0.50	0.051	ug/L	1
Vinyl chloride	75-01-4	8260B	ND		0.50	0.065	ug/L	1
Xylenes (total)	1330-20-7	8260B	ND		0.50	0.17	ug/L	1

Surrogate	Q	Run 1 % Recovery	Acceptance Limits
1,2-Dichloroethane-d4		96	70-130
Bromofluorobenzene		91	70-130
Toluene-d8		103	70-130

PQL = Practical quantitation limit
B = Detected in the method blank
E = Quantitation of compound exceeded the calibration range
ND = Not detected at or above the MDL
J = Estimated result < PQL and ≥ MDL
P = The RPD between two GC columns exceeds 40%
Where applicable, all soil sample analysis are reported on a dry weight basis unless flagged with a "W"
N = Recovery is out of criteria
H = Out of holding time

Semivolatile Organic Compounds by GC/MS

Client: ARCADIS U.S., Inc.
Description: F39SW-06 (040810)
Date Sampled: 04/08/2010 1630
Date Received: 04/10/2010

Laboratory ID: LD09018-024
Matrix: Aqueous

Run	Prep Method	Analytical Method	Dilution	Analysis Date	Analyst	Prep Date	Batch
1	3520C	8270D	1	04/15/2010 1811	JGH	04/13/2010 0021	31326

Parameter	CAS Number	Analytical Method	Result	Q	PQL	MDL	Units	Run
Acenaphthene	83-32-9	8270D	ND		1.0	0.090	ug/L	1
Acenaphthylene	208-96-8	8270D	ND		1.0	0.16	ug/L	1
Acetophenone	98-86-2	8270D	ND		1.0	0.32	ug/L	1
Anthracene	120-12-7	8270D	ND		1.0	0.13	ug/L	1
Atrazine	1912-24-9	8270D	ND		1.0	0.20	ug/L	1
Benzaldehyde	100-52-7	8270D	ND		5.0	1.0	ug/L	1
Benzo(a)anthracene	56-55-3	8270D	ND		1.0	0.15	ug/L	1
Benzo(a)pyrene	50-32-8	8270D	ND		1.0	0.16	ug/L	1
Benzo(b)fluoranthene	205-99-2	8270D	ND		1.0	0.20	ug/L	1
Benzo(g,h,i)perylene	191-24-2	8270D	ND		1.0	0.23	ug/L	1
Benzo(k)fluoranthene	207-08-9	8270D	ND		1.0	0.12	ug/L	1
1,1'-Biphenyl	92-52-4	8270D	ND		1.0	0.20	ug/L	1
4-Bromophenyl phenyl ether	101-55-3	8270D	ND		1.0	0.12	ug/L	1
Butyl benzyl phthalate	85-68-7	8270D	ND		5.0	1.7	ug/L	1
Caprolactam	105-60-2	8270D	ND		5.0	1.2	ug/L	1
Carbazole	86-74-8	8270D	ND		1.0	0.25	ug/L	1
4-Chloro-3-methyl phenol	59-50-7	8270D	ND		1.0	0.22	ug/L	1
4-Chloroaniline	106-47-8	8270D	ND		1.0	0.13	ug/L	1
bis(2-Chloroethoxy)methane	111-91-1	8270D	ND		1.0	0.13	ug/L	1
bis(2-Chloroethyl)ether	111-44-4	8270D	ND		1.0	0.13	ug/L	1
bis(2-Chloroisopropyl)ether	108-60-1	8270D	ND		1.0	0.080	ug/L	1
2-Chloronaphthalene	91-58-7	8270D	ND		1.0	0.12	ug/L	1
2-Chlorophenol	95-57-8	8270D	ND		1.0	0.13	ug/L	1
4-Chlorophenyl phenyl ether	7005-72-3	8270D	ND		1.0	0.11	ug/L	1
Chrysene	218-01-9	8270D	ND		1.0	0.12	ug/L	1
Dibenzo(a,h)anthracene	53-70-3	8270D	ND		1.0	0.13	ug/L	1
Dibenzofuran	132-64-9	8270D	ND		1.0	0.16	ug/L	1
3,3'-Dichlorobenzidine	91-94-1	8270D	ND		5.0	0.81	ug/L	1
2,4-Dichlorophenol	120-83-2	8270D	ND		1.0	0.15	ug/L	1
Diethylphthalate	84-66-2	8270D	ND		5.0	1.7	ug/L	1
Dimethyl phthalate	131-11-3	8270D	ND		5.0	1.7	ug/L	1
2,4-Dimethylphenol	105-67-9	8270D	ND		1.0	0.31	ug/L	1
Di-n-butyl phthalate	84-74-2	8270D	ND		5.0	1.7	ug/L	1
4,6-Dinitro-2-methylphenol	534-52-1	8270D	ND		5.0	1.5	ug/L	1
2,4-Dinitrophenol	51-28-5	8270D	ND		5.0	0.25	ug/L	1
2,4-Dinitrotoluene	121-14-2	8270D	ND		2.0	0.45	ug/L	1
2,6-Dinitrotoluene	606-20-2	8270D	ND		2.0	0.40	ug/L	1
Di-n-octylphthalate	117-84-0	8270D	ND		5.0	1.7	ug/L	1
bis(2-Ethylhexyl)phthalate	117-81-7	8270D	ND		5.0	1.7	ug/L	1
Fluoranthene	206-44-0	8270D	ND		1.0	0.21	ug/L	1
Fluorene	86-73-7	8270D	ND		1.0	0.10	ug/L	1
Hexachlorobenzene	118-74-1	8270D	ND		1.0	0.21	ug/L	1
Hexachlorobutadiene	87-68-3	8270D	ND		1.0	0.090	ug/L	1
Hexachlorocyclopentadiene	77-47-4	8270D	ND		5.0	0.23	ug/L	1

PQL = Practical quantitation limit
ND = Not detected at or above the MDL
B = Detected in the method blank
J = Estimated result < PQL and ≥ MDL
E = Quantitation of compound exceeded the calibration range
P = The RPD between two GC columns exceeds 40%
Where applicable, all soil sample analysis are reported on a dry weight basis unless flagged with a "W"
N = Recovery is out of criteria
H = Out of holding time

Semivolatile Organic Compounds by GC/MS

Client: ARCADIS U.S., Inc.
Laboratory ID: LD09018-024
Description: F39SW-06 (040810)
Matrix: Aqueous
Date Sampled: 04/08/2010 1630
Date Received: 04/10/2010

Run	Prep Method	Analytical Method	Dilution	Analysis Date	Analyst	Prep Date	Batch
1	3520C	8270D	1	04/15/2010 1811	JGH	04/13/2010 0021	31326

Parameter	CAS Number	Analytical Method	Result	Q	PQL	MDL	Units	Run
Hexachloroethane	67-72-1	8270D	ND		1.0	0.11	ug/L	1
Indeno(1,2,3-c,d)pyrene	193-39-5	8270D	ND		1.0	0.23	ug/L	1
Isophorone	78-59-1	8270D	ND		1.0	0.080	ug/L	1
2-Methylnaphthalene	91-57-6	8270D	ND		1.0	0.080	ug/L	1
2-Methylphenol	95-48-7	8270D	ND		1.0	0.17	ug/L	1
3 & 4-Methylphenol	106-44-5	8270D	ND		2.0	0.57	ug/L	1
Naphthalene	91-20-3	8270D	ND		1.0	0.070	ug/L	1
2-Nitroaniline	88-74-4	8270D	ND		2.0	0.55	ug/L	1
3-Nitroaniline	99-09-2	8270D	ND		2.0	0.77	ug/L	1
4-Nitroaniline	100-01-6	8270D	ND		2.0	0.39	ug/L	1
Nitrobenzene	98-95-3	8270D	ND		1.0	0.10	ug/L	1
2-Nitrophenol	88-75-5	8270D	ND		2.0	0.27	ug/L	1
4-Nitrophenol	100-02-7	8270D	ND		5.0	0.64	ug/L	1
N-Nitrosodi-n-propylamine	621-64-7	8270D	ND		1.0	0.080	ug/L	1
N-Nitrosodiphenylamine (Diphenylamine)	86-30-6	8270D	ND		1.0	0.38	ug/L	1
Pentachlorophenol	87-86-5	8270D	ND		5.0	0.54	ug/L	1
Phenanthrene	85-01-8	8270D	ND		1.0	0.18	ug/L	1
Phenol	108-95-2	8270D	ND		1.0	0.11	ug/L	1
Pyrene	129-00-0	8270D	ND		1.0	0.16	ug/L	1
2,4,5-Trichlorophenol	95-95-4	8270D	ND		1.0	0.18	ug/L	1
2,4,6-Trichlorophenol	88-06-2	8270D	ND		1.0	0.22	ug/L	1

Surrogate	Q	Run 1 % Recovery	Acceptance Limits
2-Fluorobiphenyl		78	37-129
2-Fluorophenol		80	24-127
Nitrobenzene-d5		94	38-127
Phenol-d5		77	28-128
Terphenyl-d14		31	10-148
2,4,6-Tribromophenol		120	41-144

PQL = Practical quantitation limit
B = Detected in the method blank
E = Quantitation of compound exceeded the calibration range
ND = Not detected at or above the MDL
J = Estimated result < PQL and ≥ MDL
P = The RPD between two GC columns exceeds 40%
Where applicable, all soil sample analysis are reported on a dry weight basis unless flagged with a "W"
N = Recovery is out of criteria
H = Out of holding time

RCRA Metals

Client: ARCADIS U.S., Inc.
Description: F39SW-06 (040810)
Date Sampled: 04/08/2010 1630
Date Received: 04/10/2010

Laboratory ID: LD09018-024
Matrix: Aqueous

Run	Prep Method	Analytical Method	Dilution	Analysis Date	Analyst	Prep Date	Batch
1	3005A	6010C	1	04/14/2010 0132	CDF	04/12/2010 1845	31332
1		7470A	1	04/12/2010 2212	BNW	04/12/2010 1645	31319
2	3005A	6010C	1	04/14/2010 1437	KJC	04/12/2010 1845	31332

Parameter	CAS Number	Analytical Method	Result	Q	PQL	MDL	Units	Run
Arsenic	7440-38-2	6010C	0.019	B	0.010	0.0040	mg/L	1
Barium	7440-39-3	6010C	0.049		0.025	0.0075	mg/L	1
Cadmium	7440-43-9	6010C	ND		0.0020	0.00060	mg/L	1
Chromium	7440-47-3	6010C	ND		0.0050	0.0021	mg/L	1
Lead	7439-92-1	6010C	0.0046	J	0.010	0.0019	mg/L	1
Mercury	7439-97-6	7470A	ND		0.00010	0.000053	mg/L	1
Selenium	7782-49-2	6010C	ND		0.010	0.0026	mg/L	1
Silver	7440-22-4	6010C	ND		0.0050	0.00040	mg/L	2

PQL = Practical quantitation limit
ND = Not detected at or above the MDL
Where applicable, all soil sample analysis are reported on a dry weight basis unless flagged with a "W"
B = Detected in the method blank
J = Estimated result < PQL and ≥ MDL
E = Quantitation of compound exceeded the calibration range
P = The RPD between two GC columns exceeds 40%
N = Recovery is out of criteria
H = Out of holding time

Volatile Organic Compounds by GC/MS

Client: ARCADIS U.S., Inc.
Laboratory ID: LD09018-025
Description: F39SW-07 (040810)
Matrix: Aqueous
Date Sampled: 04/08/2010 1700
Date Received: 04/10/2010

Run	Prep Method	Analytical Method	Dilution	Analysis Date	Analyst	Prep Date	Batch
1	5030B	8260B	1	04/14/2010 1722	LBS		31526

Parameter	CAS Number	Analytical Method	Result	Q	PQL	MDL	Units	Run
Acetone	67-64-1	8260B	7.6	J	10	0.061	ug/L	1
Benzene	71-43-2	8260B	ND		0.50	0.027	ug/L	1
Bromodichloromethane	75-27-4	8260B	ND		0.50	0.17	ug/L	1
Bromoform	75-25-2	8260B	ND		0.50	0.010	ug/L	1
Bromomethane (Methyl bromide)	74-83-9	8260B	ND		0.50	0.20	ug/L	1
2-Butanone (MEK)	78-93-3	8260B	ND		10	2.0	ug/L	1
Carbon disulfide	75-15-0	8260B	ND		0.50	0.097	ug/L	1
Carbon tetrachloride	56-23-5	8260B	ND		0.50	0.085	ug/L	1
Chlorobenzene	108-90-7	8260B	ND		0.50	0.17	ug/L	1
Chloroethane	75-00-3	8260B	ND		0.50	0.17	ug/L	1
Chloroform	67-66-3	8260B	ND		0.50	0.17	ug/L	1
Chloromethane (Methyl chloride)	74-87-3	8260B	ND		0.50	0.17	ug/L	1
Cyclohexane	110-82-7	8260B	ND		0.50	0.30	ug/L	1
1,2-Dibromo-3-chloropropane (DBCP)	96-12-8	8260B	ND		0.50	0.069	ug/L	1
Dibromochloromethane	124-48-1	8260B	ND		0.50	0.17	ug/L	1
1,2-Dibromoethane (EDB)	106-93-4	8260B	ND		0.50	0.061	ug/L	1
1,3-Dichlorobenzene	541-73-1	8260B	ND		0.50	0.17	ug/L	1
1,2-Dichlorobenzene	95-50-1	8260B	ND		0.50	0.17	ug/L	1
1,4-Dichlorobenzene	106-46-7	8260B	ND		0.50	0.17	ug/L	1
Dichlorodifluoromethane	75-71-8	8260B	ND		0.50	0.071	ug/L	1
1,1-Dichloroethane	75-34-3	8260B	ND		0.50	0.054	ug/L	1
1,2-Dichloroethane	107-06-2	8260B	ND		0.50	0.023	ug/L	1
trans-1,2-Dichloroethene	156-60-5	8260B	0.10	J	0.50	0.079	ug/L	1
1,1-Dichloroethene	75-35-4	8260B	ND		0.50	0.094	ug/L	1
cis-1,2-Dichloroethene	156-59-2	8260B	0.63		0.50	0.087	ug/L	1
1,2-Dichloropropane	78-87-5	8260B	ND		0.50	0.081	ug/L	1
trans-1,3-Dichloropropene	10061-02-6	8260B	ND		0.50	0.18	ug/L	1
cis-1,3-Dichloropropene	10061-01-5	8260B	ND		0.50	0.090	ug/L	1
Ethylbenzene	100-41-4	8260B	ND		0.50	0.17	ug/L	1
2-Hexanone	591-78-6	8260B	ND		10	0.27	ug/L	1
Isopropylbenzene	98-82-8	8260B	ND		0.50	0.029	ug/L	1
Methyl acetate	79-20-9	8260B	ND		1.0	0.30	ug/L	1
Methyl tertiary butyl ether (MTBE)	1634-04-4	8260B	ND		0.50	0.019	ug/L	1
4-Methyl-2-pentanone	108-10-1	8260B	ND		10	0.31	ug/L	1
Methylcyclohexane	108-87-2	8260B	ND		5.0	0.95	ug/L	1
Methylene chloride	75-09-2	8260B	0.22	BJ	0.50	0.17	ug/L	1
Styrene	100-42-5	8260B	ND		0.50	0.015	ug/L	1
1,1,2,2-Tetrachloroethane	79-34-5	8260B	ND		0.50	0.013	ug/L	1
Tetrachloroethene	127-18-4	8260B	0.81		0.50	0.014	ug/L	1
Toluene	108-88-3	8260B	ND		0.50	0.17	ug/L	1
1,1,2-Trichloro-1,2,2-Trifluoroethane	76-13-1	8260B	ND		0.50	0.30	ug/L	1
1,2,4-Trichlorobenzene	120-82-1	8260B	ND		0.50	0.17	ug/L	1
1,1,1-Trichloroethane	71-55-6	8260B	ND		0.50	0.029	ug/L	1
1,1,2-Trichloroethane	79-00-5	8260B	ND		0.50	0.031	ug/L	1

PQL = Practical quantitation limit
B = Detected in the method blank
E = Quantitation of compound exceeded the calibration range
ND = Not detected at or above the MDL
J = Estimated result < PQL and ≥ MDL
P = The RPD between two GC columns exceeds 40%
Where applicable, all soil sample analysis are reported on a dry weight basis unless flagged with a "W"
N = Recovery is out of criteria
H = Out of holding time

Volatile Organic Compounds by GC/MS

Client: ARCADIS U.S., Inc.
Laboratory ID: LD09018-025
Description: F39SW-07 (040810)
Matrix: Aqueous
Date Sampled: 04/08/2010 1700
Date Received: 04/10/2010

Run	Prep Method	Analytical Method	Dilution	Analysis Date	Analyst	Prep Date	Batch
1	5030B	8260B	1	04/14/2010 1722	LBS		31526

Parameter	CAS Number	Analytical Method	Result	Q	PQL	MDL	Units	Run
Trichloroethene	79-01-6	8260B	3.3		0.50	0.024	ug/L	1
Trichlorofluoromethane	75-69-4	8260B	ND		0.50	0.051	ug/L	1
Vinyl chloride	75-01-4	8260B	ND		0.50	0.065	ug/L	1
Xylenes (total)	1330-20-7	8260B	ND		0.50	0.17	ug/L	1

Surrogate	Q	Run 1 % Recovery	Acceptance Limits
1,2-Dichloroethane-d4		96	70-130
Bromofluorobenzene		93	70-130
Toluene-d8		104	70-130

PQL = Practical quantitation limit
B = Detected in the method blank
E = Quantitation of compound exceeded the calibration range
ND = Not detected at or above the MDL
J = Estimated result < PQL and ≥ MDL
P = The RPD between two GC columns exceeds 40%
Where applicable, all soil sample analysis are reported on a dry weight basis unless flagged with a "W"
N = Recovery is out of criteria
H = Out of holding time

Semivolatile Organic Compounds by GC/MS

Client: ARCADIS U.S., Inc.
Laboratory ID: LD09018-025
Description: F39SW-07 (040810)
Matrix: Aqueous
Date Sampled: 04/08/2010 1700
Date Received: 04/10/2010

Run	Prep Method	Analytical Method	Dilution	Analysis Date	Analyst	Prep Date	Batch
1	3520C	8270D	1	04/15/2010 1830	JGH	04/13/2010 0021	31326

Parameter	CAS Number	Analytical Method	Result	Q	PQL	MDL	Units	Run
Acenaphthene	83-32-9	8270D	ND		1.0	0.090	ug/L	1
Acenaphthylene	208-96-8	8270D	ND		1.0	0.16	ug/L	1
Acetophenone	98-86-2	8270D	ND		1.0	0.32	ug/L	1
Anthracene	120-12-7	8270D	ND		1.0	0.13	ug/L	1
Atrazine	1912-24-9	8270D	ND		1.0	0.20	ug/L	1
Benzaldehyde	100-52-7	8270D	ND		5.0	1.0	ug/L	1
Benzo(a)anthracene	56-55-3	8270D	ND		1.0	0.15	ug/L	1
Benzo(a)pyrene	50-32-8	8270D	ND		1.0	0.16	ug/L	1
Benzo(b)fluoranthene	205-99-2	8270D	ND		1.0	0.20	ug/L	1
Benzo(g,h,i)perylene	191-24-2	8270D	ND		1.0	0.23	ug/L	1
Benzo(k)fluoranthene	207-08-9	8270D	ND		1.0	0.12	ug/L	1
1,1'-Biphenyl	92-52-4	8270D	ND		1.0	0.20	ug/L	1
4-Bromophenyl phenyl ether	101-55-3	8270D	ND		1.0	0.12	ug/L	1
Butyl benzyl phthalate	85-68-7	8270D	ND		5.0	1.7	ug/L	1
Caprolactam	105-60-2	8270D	1.9	J	5.0	1.2	ug/L	1
Carbazole	86-74-8	8270D	ND		1.0	0.25	ug/L	1
4-Chloro-3-methyl phenol	59-50-7	8270D	ND		1.0	0.22	ug/L	1
4-Chloroaniline	106-47-8	8270D	ND		1.0	0.13	ug/L	1
bis(2-Chloroethoxy)methane	111-91-1	8270D	ND		1.0	0.13	ug/L	1
bis(2-Chloroethyl)ether	111-44-4	8270D	ND		1.0	0.13	ug/L	1
bis(2-Chloroisopropyl)ether	108-60-1	8270D	ND		1.0	0.080	ug/L	1
2-Chloronaphthalene	91-58-7	8270D	ND		1.0	0.12	ug/L	1
2-Chlorophenol	95-57-8	8270D	ND		1.0	0.13	ug/L	1
4-Chlorophenyl phenyl ether	7005-72-3	8270D	ND		1.0	0.11	ug/L	1
Chrysene	218-01-9	8270D	ND		1.0	0.12	ug/L	1
Dibenzo(a,h)anthracene	53-70-3	8270D	ND		1.0	0.13	ug/L	1
Dibenzofuran	132-64-9	8270D	ND		1.0	0.16	ug/L	1
3,3'-Dichlorobenzidine	91-94-1	8270D	ND		5.0	0.81	ug/L	1
2,4-Dichlorophenol	120-83-2	8270D	ND		1.0	0.15	ug/L	1
Diethylphthalate	84-66-2	8270D	ND		5.0	1.7	ug/L	1
Dimethyl phthalate	131-11-3	8270D	ND		5.0	1.7	ug/L	1
2,4-Dimethylphenol	105-67-9	8270D	ND		1.0	0.31	ug/L	1
Di-n-butyl phthalate	84-74-2	8270D	ND		5.0	1.7	ug/L	1
4,6-Dinitro-2-methylphenol	534-52-1	8270D	ND		5.0	1.5	ug/L	1
2,4-Dinitrophenol	51-28-5	8270D	ND		5.0	0.25	ug/L	1
2,4-Dinitrotoluene	121-14-2	8270D	ND		2.0	0.45	ug/L	1
2,6-Dinitrotoluene	606-20-2	8270D	ND		2.0	0.40	ug/L	1
Di-n-octylphthalate	117-84-0	8270D	ND		5.0	1.7	ug/L	1
bis(2-Ethylhexyl)phthalate	117-81-7	8270D	ND		5.0	1.7	ug/L	1
Fluoranthene	206-44-0	8270D	ND		1.0	0.21	ug/L	1
Fluorene	86-73-7	8270D	ND		1.0	0.10	ug/L	1
Hexachlorobenzene	118-74-1	8270D	ND		1.0	0.21	ug/L	1
Hexachlorobutadiene	87-68-3	8270D	ND		1.0	0.090	ug/L	1
Hexachlorocyclopentadiene	77-47-4	8270D	ND		5.0	0.23	ug/L	1

PQL = Practical quantitation limit
B = Detected in the method blank
E = Quantitation of compound exceeded the calibration range
ND = Not detected at or above the MDL
J = Estimated result < PQL and ≥ MDL
P = The RPD between two GC columns exceeds 40%
Where applicable, all soil sample analysis are reported on a dry weight basis unless flagged with a "W"
N = Recovery is out of criteria
H = Out of holding time

Semivolatile Organic Compounds by GC/MS

Client: ARCADIS U.S., Inc.
Laboratory ID: LD09018-025
Description: F39SW-07 (040810)
Matrix: Aqueous
Date Sampled: 04/08/2010 1700
Date Received: 04/10/2010

Run	Prep Method	Analytical Method	Dilution	Analysis Date	Analyst	Prep Date	Batch
1	3520C	8270D	1	04/15/2010 1830	JGH	04/13/2010 0021	31326

Parameter	CAS Number	Analytical Method	Result	Q	PQL	MDL	Units	Run
Hexachloroethane	67-72-1	8270D	ND		1.0	0.11	ug/L	1
Indeno(1,2,3-c,d)pyrene	193-39-5	8270D	ND		1.0	0.23	ug/L	1
Isophorone	78-59-1	8270D	ND		1.0	0.080	ug/L	1
2-Methylnaphthalene	91-57-6	8270D	ND		1.0	0.080	ug/L	1
2-Methylphenol	95-48-7	8270D	ND		1.0	0.17	ug/L	1
3 & 4-Methylphenol	106-44-5	8270D	ND		2.0	0.57	ug/L	1
Naphthalene	91-20-3	8270D	ND		1.0	0.070	ug/L	1
2-Nitroaniline	88-74-4	8270D	ND		2.0	0.55	ug/L	1
3-Nitroaniline	99-09-2	8270D	ND		2.0	0.77	ug/L	1
4-Nitroaniline	100-01-6	8270D	ND		2.0	0.39	ug/L	1
Nitrobenzene	98-95-3	8270D	ND		1.0	0.10	ug/L	1
2-Nitrophenol	88-75-5	8270D	ND		2.0	0.27	ug/L	1
4-Nitrophenol	100-02-7	8270D	ND		5.0	0.64	ug/L	1
N-Nitrosodi-n-propylamine	621-64-7	8270D	ND		1.0	0.080	ug/L	1
N-Nitrosodiphenylamine (Diphenylamine)	86-30-6	8270D	ND		1.0	0.38	ug/L	1
Pentachlorophenol	87-86-5	8270D	ND		5.0	0.54	ug/L	1
Phenanthrene	85-01-8	8270D	ND		1.0	0.18	ug/L	1
Phenol	108-95-2	8270D	ND		1.0	0.11	ug/L	1
Pyrene	129-00-0	8270D	ND		1.0	0.16	ug/L	1
2,4,5-Trichlorophenol	95-95-4	8270D	ND		1.0	0.18	ug/L	1
2,4,6-Trichlorophenol	88-06-2	8270D	ND		1.0	0.22	ug/L	1

Surrogate	Q	Run 1 % Recovery	Acceptance Limits
2-Fluorobiphenyl		81	37-129
2-Fluorophenol		75	24-127
Nitrobenzene-d5		88	38-127
Phenol-d5		73	28-128
Terphenyl-d14		38	10-148
2,4,6-Tribromophenol		119	41-144

PQL = Practical quantitation limit
B = Detected in the method blank
E = Quantitation of compound exceeded the calibration range
ND = Not detected at or above the MDL
J = Estimated result < PQL and ≥ MDL
P = The RPD between two GC columns exceeds 40%
Where applicable, all soil sample analysis are reported on a dry weight basis unless flagged with a "W"
N = Recovery is out of criteria
H = Out of holding time

RCRA Metals

Client: ARCADIS U.S., Inc.
Description: F39SW-07 (040810)
Date Sampled: 04/08/2010 1700
Date Received: 04/10/2010

Laboratory ID: LD09018-025
Matrix: Aqueous

Run	Prep Method	Analytical Method	Dilution	Analysis Date	Analyst	Prep Date	Batch
1	3005A	6010C	1	04/14/2010 0137	CDF	04/12/2010 1845	31332
1		7470A	1	04/12/2010 2215	BNW	04/12/2010 1645	31319
2	3005A	6010C	1	04/14/2010 1443	KJC	04/12/2010 1845	31332

Parameter	CAS Number	Analytical Method	Result	Q	PQL	MDL	Units	Run
Arsenic	7440-38-2	6010C	0.022	B	0.010	0.0040	mg/L	1
Barium	7440-39-3	6010C	0.047		0.025	0.0075	mg/L	1
Cadmium	7440-43-9	6010C	ND		0.0020	0.00060	mg/L	1
Chromium	7440-47-3	6010C	0.0039	J	0.0050	0.0021	mg/L	1
Lead	7439-92-1	6010C	0.0051	J	0.010	0.0019	mg/L	1
Mercury	7439-97-6	7470A	ND		0.00010	0.000053	mg/L	1
Selenium	7782-49-2	6010C	ND		0.010	0.0026	mg/L	1
Silver	7440-22-4	6010C	ND		0.0050	0.00040	mg/L	2

PQL = Practical quantitation limit
ND = Not detected at or above the MDL
Where applicable, all soil sample analysis are reported on a dry weight basis unless flagged with a "W"
B = Detected in the method blank
J = Estimated result < PQL and ≥ MDL
E = Quantitation of compound exceeded the calibration range
P = The RPD between two GC columns exceeds 40%
N = Recovery is out of criteria
H = Out of holding time

Volatile Organic Compounds by GC/MS

Client: ARCADIS U.S., Inc.
Laboratory ID: LD09018-026
Description: DUP01 (040810)
Matrix: Aqueous
Date Sampled: 04/08/2010
Date Received: 04/10/2010

Run	Prep Method	Analytical Method	Dilution	Analysis Date	Analyst	Prep Date	Batch
1	5030B	8260B	1	04/14/2010 1744	LBS		31526

Parameter	CAS Number	Analytical Method	Result	Q	PQL	MDL	Units	Run
Acetone	67-64-1	8260B	3.1	J	10	0.061	ug/L	1
Benzene	71-43-2	8260B	ND		0.50	0.027	ug/L	1
Bromodichloromethane	75-27-4	8260B	ND		0.50	0.17	ug/L	1
Bromoform	75-25-2	8260B	ND		0.50	0.010	ug/L	1
Bromomethane (Methyl bromide)	74-83-9	8260B	ND		0.50	0.20	ug/L	1
2-Butanone (MEK)	78-93-3	8260B	ND		10	2.0	ug/L	1
Carbon disulfide	75-15-0	8260B	ND		0.50	0.097	ug/L	1
Carbon tetrachloride	56-23-5	8260B	ND		0.50	0.085	ug/L	1
Chlorobenzene	108-90-7	8260B	ND		0.50	0.17	ug/L	1
Chloroethane	75-00-3	8260B	ND		0.50	0.17	ug/L	1
Chloroform	67-66-3	8260B	ND		0.50	0.17	ug/L	1
Chloromethane (Methyl chloride)	74-87-3	8260B	ND		0.50	0.17	ug/L	1
Cyclohexane	110-82-7	8260B	ND		0.50	0.30	ug/L	1
1,2-Dibromo-3-chloropropane (DBCP)	96-12-8	8260B	ND		0.50	0.069	ug/L	1
Dibromochloromethane	124-48-1	8260B	ND		0.50	0.17	ug/L	1
1,2-Dibromoethane (EDB)	106-93-4	8260B	ND		0.50	0.061	ug/L	1
1,3-Dichlorobenzene	541-73-1	8260B	ND		0.50	0.17	ug/L	1
1,2-Dichlorobenzene	95-50-1	8260B	ND		0.50	0.17	ug/L	1
1,4-Dichlorobenzene	106-46-7	8260B	ND		0.50	0.17	ug/L	1
Dichlorodifluoromethane	75-71-8	8260B	ND		0.50	0.071	ug/L	1
1,1-Dichloroethane	75-34-3	8260B	ND		0.50	0.054	ug/L	1
1,2-Dichloroethane	107-06-2	8260B	ND		0.50	0.023	ug/L	1
trans-1,2-Dichloroethene	156-60-5	8260B	ND		0.50	0.079	ug/L	1
1,1-Dichloroethene	75-35-4	8260B	ND		0.50	0.094	ug/L	1
cis-1,2-Dichloroethene	156-59-2	8260B	0.40	J	0.50	0.087	ug/L	1
1,2-Dichloropropane	78-87-5	8260B	ND		0.50	0.081	ug/L	1
trans-1,3-Dichloropropene	10061-02-6	8260B	ND		0.50	0.18	ug/L	1
cis-1,3-Dichloropropene	10061-01-5	8260B	ND		0.50	0.090	ug/L	1
Ethylbenzene	100-41-4	8260B	ND		0.50	0.17	ug/L	1
2-Hexanone	591-78-6	8260B	ND		10	0.27	ug/L	1
Isopropylbenzene	98-82-8	8260B	ND		0.50	0.029	ug/L	1
Methyl acetate	79-20-9	8260B	ND		1.0	0.30	ug/L	1
Methyl tertiary butyl ether (MTBE)	1634-04-4	8260B	ND		0.50	0.019	ug/L	1
4-Methyl-2-pentanone	108-10-1	8260B	ND		10	0.31	ug/L	1
Methylcyclohexane	108-87-2	8260B	ND		5.0	0.95	ug/L	1
Methylene chloride	75-09-2	8260B	0.21	BJ	0.50	0.17	ug/L	1
Styrene	100-42-5	8260B	ND		0.50	0.015	ug/L	1
1,1,2,2-Tetrachloroethane	79-34-5	8260B	ND		0.50	0.013	ug/L	1
Tetrachloroethene	127-18-4	8260B	1.0		0.50	0.014	ug/L	1
Toluene	108-88-3	8260B	ND		0.50	0.17	ug/L	1
1,1,2-Trichloro-1,2,2-Trifluoroethane	76-13-1	8260B	ND		0.50	0.30	ug/L	1
1,2,4-Trichlorobenzene	120-82-1	8260B	ND		0.50	0.17	ug/L	1
1,1,1-Trichloroethane	71-55-6	8260B	ND		0.50	0.029	ug/L	1
1,1,2-Trichloroethane	79-00-5	8260B	ND		0.50	0.031	ug/L	1

PQL = Practical quantitation limit
B = Detected in the method blank
E = Quantitation of compound exceeded the calibration range
ND = Not detected at or above the MDL
J = Estimated result < PQL and ≥ MDL
P = The RPD between two GC columns exceeds 40%
Where applicable, all soil sample analysis are reported on a dry weight basis unless flagged with a "W"
N = Recovery is out of criteria
H = Out of holding time

Volatile Organic Compounds by GC/MS

Client: ARCADIS U.S., Inc.
Laboratory ID: LD09018-026
Description: DUP01 (040810)
Matrix: Aqueous
Date Sampled: 04/08/2010
Date Received: 04/10/2010

Run	Prep Method	Analytical Method	Dilution	Analysis Date	Analyst	Prep Date	Batch
1	5030B	8260B	1	04/14/2010 1744	LBS		31526

Parameter	CAS Number	Analytical Method	Result	Q	PQL	MDL	Units	Run
Trichloroethene	79-01-6	8260B	4.3		0.50	0.024	ug/L	1
Trichlorofluoromethane	75-69-4	8260B	ND		0.50	0.051	ug/L	1
Vinyl chloride	75-01-4	8260B	ND		0.50	0.065	ug/L	1
Xylenes (total)	1330-20-7	8260B	ND		0.50	0.17	ug/L	1

Surrogate	Q	Run 1 % Recovery	Acceptance Limits
1,2-Dichloroethane-d4		98	70-130
Bromofluorobenzene		92	70-130
Toluene-d8		105	70-130

PQL = Practical quantitation limit
B = Detected in the method blank
E = Quantitation of compound exceeded the calibration range
ND = Not detected at or above the MDL
J = Estimated result < PQL and ≥ MDL
P = The RPD between two GC columns exceeds 40%
Where applicable, all soil sample analysis are reported on a dry weight basis unless flagged with a "W"
N = Recovery is out of criteria
H = Out of holding time

Semivolatile Organic Compounds by GC/MS

Client: ARCADIS U.S., Inc.
Laboratory ID: LD09018-026
Description: DUP01 (040810)
Matrix: Aqueous
Date Sampled: 04/08/2010
Date Received: 04/10/2010

Run	Prep Method	Analytical Method	Dilution	Analysis Date	Analyst	Prep Date	Batch
1	3520C	8270D	1	04/15/2010 1850	JGH	04/13/2010 0021	31326

Parameter	CAS Number	Analytical Method	Result	Q	PQL	MDL	Units	Run
Acenaphthene	83-32-9	8270D	ND		1.0	0.090	ug/L	1
Acenaphthylene	208-96-8	8270D	ND		1.0	0.16	ug/L	1
Acetophenone	98-86-2	8270D	ND		1.0	0.32	ug/L	1
Anthracene	120-12-7	8270D	ND		1.0	0.13	ug/L	1
Atrazine	1912-24-9	8270D	ND		1.0	0.20	ug/L	1
Benzaldehyde	100-52-7	8270D	ND		5.0	1.0	ug/L	1
Benzo(a)anthracene	56-55-3	8270D	ND		1.0	0.15	ug/L	1
Benzo(a)pyrene	50-32-8	8270D	ND		1.0	0.16	ug/L	1
Benzo(b)fluoranthene	205-99-2	8270D	ND		1.0	0.20	ug/L	1
Benzo(g,h,i)perylene	191-24-2	8270D	ND		1.0	0.23	ug/L	1
Benzo(k)fluoranthene	207-08-9	8270D	ND		1.0	0.12	ug/L	1
1,1'-Biphenyl	92-52-4	8270D	ND		1.0	0.20	ug/L	1
4-Bromophenyl phenyl ether	101-55-3	8270D	ND		1.0	0.12	ug/L	1
Butyl benzyl phthalate	85-68-7	8270D	ND		5.0	1.7	ug/L	1
Caprolactam	105-60-2	8270D	2.3	J	5.0	1.2	ug/L	1
Carbazole	86-74-8	8270D	ND		1.0	0.25	ug/L	1
4-Chloro-3-methyl phenol	59-50-7	8270D	ND		1.0	0.22	ug/L	1
4-Chloroaniline	106-47-8	8270D	ND		1.0	0.13	ug/L	1
bis(2-Chloroethoxy)methane	111-91-1	8270D	ND		1.0	0.13	ug/L	1
bis(2-Chloroethyl)ether	111-44-4	8270D	ND		1.0	0.13	ug/L	1
bis(2-Chloroisopropyl)ether	108-60-1	8270D	ND		1.0	0.080	ug/L	1
2-Chloronaphthalene	91-58-7	8270D	ND		1.0	0.12	ug/L	1
2-Chlorophenol	95-57-8	8270D	ND		1.0	0.13	ug/L	1
4-Chlorophenyl phenyl ether	7005-72-3	8270D	ND		1.0	0.11	ug/L	1
Chrysene	218-01-9	8270D	ND		1.0	0.12	ug/L	1
Dibenzo(a,h)anthracene	53-70-3	8270D	ND		1.0	0.13	ug/L	1
Dibenzofuran	132-64-9	8270D	ND		1.0	0.16	ug/L	1
3,3'-Dichlorobenzidine	91-94-1	8270D	ND		5.0	0.81	ug/L	1
2,4-Dichlorophenol	120-83-2	8270D	ND		1.0	0.15	ug/L	1
Diethylphthalate	84-66-2	8270D	ND		5.0	1.7	ug/L	1
Dimethyl phthalate	131-11-3	8270D	ND		5.0	1.7	ug/L	1
2,4-Dimethylphenol	105-67-9	8270D	ND		1.0	0.31	ug/L	1
Di-n-butyl phthalate	84-74-2	8270D	ND		5.0	1.7	ug/L	1
4,6-Dinitro-2-methylphenol	534-52-1	8270D	ND		5.0	1.5	ug/L	1
2,4-Dinitrophenol	51-28-5	8270D	ND		5.0	0.25	ug/L	1
2,4-Dinitrotoluene	121-14-2	8270D	ND		2.0	0.45	ug/L	1
2,6-Dinitrotoluene	606-20-2	8270D	ND		2.0	0.40	ug/L	1
Di-n-octylphthalate	117-84-0	8270D	ND		5.0	1.7	ug/L	1
bis(2-Ethylhexyl)phthalate	117-81-7	8270D	ND		5.0	1.7	ug/L	1
Fluoranthene	206-44-0	8270D	ND		1.0	0.21	ug/L	1
Fluorene	86-73-7	8270D	ND		1.0	0.10	ug/L	1
Hexachlorobenzene	118-74-1	8270D	ND		1.0	0.21	ug/L	1
Hexachlorobutadiene	87-68-3	8270D	ND		1.0	0.090	ug/L	1
Hexachlorocyclopentadiene	77-47-4	8270D	ND		5.0	0.23	ug/L	1

PQL = Practical quantitation limit
B = Detected in the method blank
E = Quantitation of compound exceeded the calibration range
ND = Not detected at or above the MDL
J = Estimated result < PQL and ≥ MDL
P = The RPD between two GC columns exceeds 40%
Where applicable, all soil sample analysis are reported on a dry weight basis unless flagged with a "W"
N = Recovery is out of criteria
H = Out of holding time

Semivolatile Organic Compounds by GC/MS

Client: ARCADIS U.S., Inc.
Laboratory ID: LD09018-026
Description: DUP01 (040810)
Matrix: Aqueous
Date Sampled: 04/08/2010
Date Received: 04/10/2010

Run	Prep Method	Analytical Method	Dilution	Analysis Date	Analyst	Prep Date	Batch
1	3520C	8270D	1	04/15/2010 1850	JGH	04/13/2010 0021	31326

Parameter	CAS Number	Analytical Method	Result	Q	PQL	MDL	Units	Run
Hexachloroethane	67-72-1	8270D	ND		1.0	0.11	ug/L	1
Indeno(1,2,3-c,d)pyrene	193-39-5	8270D	ND		1.0	0.23	ug/L	1
Isophorone	78-59-1	8270D	ND		1.0	0.080	ug/L	1
2-Methylnaphthalene	91-57-6	8270D	ND		1.0	0.080	ug/L	1
2-Methylphenol	95-48-7	8270D	ND		1.0	0.17	ug/L	1
3 & 4-Methylphenol	106-44-5	8270D	ND		2.0	0.57	ug/L	1
Naphthalene	91-20-3	8270D	ND		1.0	0.070	ug/L	1
2-Nitroaniline	88-74-4	8270D	ND		2.0	0.55	ug/L	1
3-Nitroaniline	99-09-2	8270D	ND		2.0	0.77	ug/L	1
4-Nitroaniline	100-01-6	8270D	ND		2.0	0.39	ug/L	1
Nitrobenzene	98-95-3	8270D	ND		1.0	0.10	ug/L	1
2-Nitrophenol	88-75-5	8270D	ND		2.0	0.27	ug/L	1
4-Nitrophenol	100-02-7	8270D	ND		5.0	0.64	ug/L	1
N-Nitrosodi-n-propylamine	621-64-7	8270D	ND		1.0	0.080	ug/L	1
N-Nitrosodiphenylamine (Diphenylamine)	86-30-6	8270D	ND		1.0	0.38	ug/L	1
Pentachlorophenol	87-86-5	8270D	ND		5.0	0.54	ug/L	1
Phenanthrene	85-01-8	8270D	ND		1.0	0.18	ug/L	1
Phenol	108-95-2	8270D	ND		1.0	0.11	ug/L	1
Pyrene	129-00-0	8270D	ND		1.0	0.16	ug/L	1
2,4,5-Trichlorophenol	95-95-4	8270D	ND		1.0	0.18	ug/L	1
2,4,6-Trichlorophenol	88-06-2	8270D	ND		1.0	0.22	ug/L	1

Surrogate	Q	Run 1 % Recovery	Acceptance Limits
2-Fluorobiphenyl		81	37-129
2-Fluorophenol		69	24-127
Nitrobenzene-d5		83	38-127
Phenol-d5		51	28-128
Terphenyl-d14		53	10-148
2,4,6-Tribromophenol		112	41-144

PQL = Practical quantitation limit
B = Detected in the method blank
E = Quantitation of compound exceeded the calibration range
ND = Not detected at or above the MDL
J = Estimated result < PQL and ≥ MDL
P = The RPD between two GC columns exceeds 40%
Where applicable, all soil sample analysis are reported on a dry weight basis unless flagged with a "W"
N = Recovery is out of criteria
H = Out of holding time

RCRA Metals

Client: ARCADIS U.S., Inc.
Description: DUP01 (040810)
Date Sampled: 04/08/2010
Date Received: 04/10/2010

Laboratory ID: LD09018-026
Matrix: Aqueous

Run	Prep Method	Analytical Method	Dilution	Analysis Date	Analyst	Prep Date	Batch
1	3005A	6010C	1	04/14/2010 0142	CDF	04/12/2010 1845	31332
1		7470A	1	04/12/2010 2217	BNW	04/12/2010 1645	31319
2	3005A	6010C	1	04/14/2010 1449	KJC	04/12/2010 1845	31332

Parameter	CAS Number	Analytical Method	Result	Q	PQL	MDL	Units	Run
Arsenic	7440-38-2	6010C	0.016	B	0.010	0.0040	mg/L	1
Barium	7440-39-3	6010C	0.047		0.025	0.0075	mg/L	1
Cadmium	7440-43-9	6010C	ND		0.0020	0.00060	mg/L	1
Chromium	7440-47-3	6010C	0.0042	J	0.0050	0.0021	mg/L	1
Lead	7439-92-1	6010C	0.0075	J	0.010	0.0019	mg/L	1
Mercury	7439-97-6	7470A	ND		0.00010	0.000053	mg/L	1
Selenium	7782-49-2	6010C	ND		0.010	0.0026	mg/L	1
Silver	7440-22-4	6010C	ND		0.0050	0.00040	mg/L	2

PQL = Practical quantitation limit
ND = Not detected at or above the MDL
Where applicable, all soil sample analysis are reported on a dry weight basis unless flagged with a "W"
B = Detected in the method blank
J = Estimated result < PQL and ≥ MDL
E = Quantitation of compound exceeded the calibration range
P = The RPD between two GC columns exceeds 40%
N = Recovery is out of criteria
H = Out of holding time

Volatile Organic Compounds by GC/MS

Client: ARCADIS U.S., Inc.
Laboratory ID: LD09018-027
Description: TRIP BLANK
Matrix: Aqueous
Date Sampled: 04/10/2010 1000
Date Received: 04/10/2010

Run	Prep Method	Analytical Method	Dilution	Analysis Date	Analyst	Prep Date	Batch
1	5030B	8260B	1	04/14/2010 1806	LBS		31526

Parameter	CAS Number	Analytical Method	Result	Q	PQL	MDL	Units	Run
Acetone	67-64-1	8260B	2.1	J	10	0.061	ug/L	1
Benzene	71-43-2	8260B	ND		0.50	0.027	ug/L	1
Bromodichloromethane	75-27-4	8260B	ND		0.50	0.17	ug/L	1
Bromoform	75-25-2	8260B	ND		0.50	0.010	ug/L	1
Bromomethane (Methyl bromide)	74-83-9	8260B	ND		0.50	0.20	ug/L	1
2-Butanone (MEK)	78-93-3	8260B	ND		10	2.0	ug/L	1
Carbon disulfide	75-15-0	8260B	ND		0.50	0.097	ug/L	1
Carbon tetrachloride	56-23-5	8260B	ND		0.50	0.085	ug/L	1
Chlorobenzene	108-90-7	8260B	ND		0.50	0.17	ug/L	1
Chloroethane	75-00-3	8260B	ND		0.50	0.17	ug/L	1
Chloroform	67-66-3	8260B	ND		0.50	0.17	ug/L	1
Chloromethane (Methyl chloride)	74-87-3	8260B	ND		0.50	0.17	ug/L	1
Cyclohexane	110-82-7	8260B	ND		0.50	0.30	ug/L	1
1,2-Dibromo-3-chloropropane (DBCP)	96-12-8	8260B	ND		0.50	0.069	ug/L	1
Dibromochloromethane	124-48-1	8260B	ND		0.50	0.17	ug/L	1
1,2-Dibromoethane (EDB)	106-93-4	8260B	ND		0.50	0.061	ug/L	1
1,3-Dichlorobenzene	541-73-1	8260B	ND		0.50	0.17	ug/L	1
1,2-Dichlorobenzene	95-50-1	8260B	ND		0.50	0.17	ug/L	1
1,4-Dichlorobenzene	106-46-7	8260B	ND		0.50	0.17	ug/L	1
Dichlorodifluoromethane	75-71-8	8260B	ND		0.50	0.071	ug/L	1
1,1-Dichloroethane	75-34-3	8260B	ND		0.50	0.054	ug/L	1
1,2-Dichloroethane	107-06-2	8260B	ND		0.50	0.023	ug/L	1
trans-1,2-Dichloroethene	156-60-5	8260B	ND		0.50	0.079	ug/L	1
1,1-Dichloroethene	75-35-4	8260B	ND		0.50	0.094	ug/L	1
cis-1,2-Dichloroethene	156-59-2	8260B	ND		0.50	0.087	ug/L	1
1,2-Dichloropropane	78-87-5	8260B	ND		0.50	0.081	ug/L	1
trans-1,3-Dichloropropene	10061-02-6	8260B	ND		0.50	0.18	ug/L	1
cis-1,3-Dichloropropene	10061-01-5	8260B	ND		0.50	0.090	ug/L	1
Ethylbenzene	100-41-4	8260B	ND		0.50	0.17	ug/L	1
2-Hexanone	591-78-6	8260B	ND		10	0.27	ug/L	1
Isopropylbenzene	98-82-8	8260B	ND		0.50	0.029	ug/L	1
Methyl acetate	79-20-9	8260B	ND		1.0	0.30	ug/L	1
Methyl tertiary butyl ether (MTBE)	1634-04-4	8260B	ND		0.50	0.019	ug/L	1
4-Methyl-2-pentanone	108-10-1	8260B	ND		10	0.31	ug/L	1
Methylcyclohexane	108-87-2	8260B	ND		5.0	0.95	ug/L	1
Methylene chloride	75-09-2	8260B	0.27	BJ	0.50	0.17	ug/L	1
Styrene	100-42-5	8260B	ND		0.50	0.015	ug/L	1
1,1,2,2-Tetrachloroethane	79-34-5	8260B	ND		0.50	0.013	ug/L	1
Tetrachloroethene	127-18-4	8260B	ND		0.50	0.014	ug/L	1
Toluene	108-88-3	8260B	ND		0.50	0.17	ug/L	1
1,1,2-Trichloro-1,2,2-Trifluoroethane	76-13-1	8260B	ND		0.50	0.30	ug/L	1
1,2,4-Trichlorobenzene	120-82-1	8260B	ND		0.50	0.17	ug/L	1
1,1,1-Trichloroethane	71-55-6	8260B	ND		0.50	0.029	ug/L	1
1,1,2-Trichloroethane	79-00-5	8260B	ND		0.50	0.031	ug/L	1

PQL = Practical quantitation limit
B = Detected in the method blank
E = Quantitation of compound exceeded the calibration range
ND = Not detected at or above the MDL
J = Estimated result < PQL and ≥ MDL
P = The RPD between two GC columns exceeds 40%
Where applicable, all soil sample analysis are reported on a dry weight basis unless flagged with a "W"
N = Recovery is out of criteria
H = Out of holding time

Volatile Organic Compounds by GC/MS

Client: ARCADIS U.S., Inc.
Laboratory ID: LD09018-027
Description: TRIP BLANK
Matrix: Aqueous
Date Sampled: 04/10/2010 1000
Date Received: 04/10/2010

Run	Prep Method	Analytical Method	Dilution	Analysis Date	Analyst	Prep Date	Batch
1	5030B	8260B	1	04/14/2010 1806	LBS		31526

Parameter	CAS Number	Analytical Method	Result	Q	PQL	MDL	Units	Run
Trichloroethene	79-01-6	8260B	ND		0.50	0.024	ug/L	1
Trichlorofluoromethane	75-69-4	8260B	ND		0.50	0.051	ug/L	1
Vinyl chloride	75-01-4	8260B	ND		0.50	0.065	ug/L	1
Xylenes (total)	1330-20-7	8260B	ND		0.50	0.17	ug/L	1

Surrogate	Q	Run 1 % Recovery	Acceptance Limits
1,2-Dichloroethane-d4		96	70-130
Bromofluorobenzene		91	70-130
Toluene-d8		103	70-130

PQL = Practical quantitation limit
B = Detected in the method blank
E = Quantitation of compound exceeded the calibration range
ND = Not detected at or above the MDL
J = Estimated result < PQL and ≥ MDL
P = The RPD between two GC columns exceeds 40%
Where applicable, all soil sample analysis are reported on a dry weight basis unless flagged with a "W"
N = Recovery is out of criteria
H = Out of holding time

Volatile Organic Compounds by GC/MS

Client: ARCADIS U.S., Inc.
Laboratory ID: LD09018-028
Description: F39SED01 (040810)
Matrix: Solid
Date Sampled: 04/08/2010 0900
% Solids: 72.2 04/11/2010 1236
Date Received: 04/10/2010

Run	Prep Method	Analytical Method	Dilution	Analysis Date	Analyst	Prep Date	Batch	Sample Wt.(g)
1	5035	8260B	1	04/17/2010 1646	DLB		31760	1.11

Parameter	CAS Number	Analytical Method	Result	Q	PQL	MDL	Units	Run
Acetone	67-64-1	8260B	ND		120	42	ug/kg	1
Benzene	71-43-2	8260B	ND		31	6.9	ug/kg	1
Bromodichloromethane	75-27-4	8260B	ND		31	11	ug/kg	1
Bromoform	75-25-2	8260B	ND		31	4.4	ug/kg	1
Bromomethane (Methyl bromide)	74-83-9	8260B	ND		31	11	ug/kg	1
2-Butanone (MEK)	78-93-3	8260B	ND		62	15	ug/kg	1
Carbon disulfide	75-15-0	8260B	ND		31	8.1	ug/kg	1
Carbon tetrachloride	56-23-5	8260B	ND		31	11	ug/kg	1
Chlorobenzene	108-90-7	8260B	ND		31	11	ug/kg	1
Chloroethane	75-00-3	8260B	ND		31	8.1	ug/kg	1
Chloroform	67-66-3	8260B	ND		31	5.2	ug/kg	1
Chloromethane (Methyl chloride)	74-87-3	8260B	ND		31	6.2	ug/kg	1
Cyclohexane	110-82-7	8260B	ND		31	4.2	ug/kg	1
1,2-Dibromo-3-chloropropane (DBCP)	96-12-8	8260B	ND		31	9.4	ug/kg	1
Dibromochloromethane	124-48-1	8260B	ND		31	11	ug/kg	1
1,2-Dibromoethane (EDB)	106-93-4	8260B	ND		31	5.3	ug/kg	1
1,2-Dichlorobenzene	95-50-1	8260B	ND		31	11	ug/kg	1
1,3-Dichlorobenzene	541-73-1	8260B	ND		31	11	ug/kg	1
1,4-Dichlorobenzene	106-46-7	8260B	ND		31	11	ug/kg	1
Dichlorodifluoromethane	75-71-8	8260B	ND		31	10	ug/kg	1
1,1-Dichloroethane	75-34-3	8260B	ND		31	4.6	ug/kg	1
1,2-Dichloroethane	107-06-2	8260B	ND		31	6.2	ug/kg	1
1,1-Dichloroethene	75-35-4	8260B	ND		31	11	ug/kg	1
cis-1,2-Dichloroethene	156-59-2	8260B	ND		31	4.7	ug/kg	1
trans-1,2-Dichloroethene	156-60-5	8260B	ND		31	9.4	ug/kg	1
1,2-Dichloropropane	78-87-5	8260B	ND		31	5.7	ug/kg	1
cis-1,3-Dichloropropene	10061-01-5	8260B	ND		31	4.2	ug/kg	1
trans-1,3-Dichloropropene	10061-02-6	8260B	ND		31	5.1	ug/kg	1
Ethylbenzene	100-41-4	8260B	ND		31	11	ug/kg	1
2-Hexanone	591-78-6	8260B	ND		62	8.1	ug/kg	1
Isopropylbenzene	98-82-8	8260B	ND		31	5.0	ug/kg	1
Methyl acetate	79-20-9	8260B	ND		31	4.2	ug/kg	1
Methyl tertiary butyl ether (MTBE)	1634-04-4	8260B	ND		31	2.5	ug/kg	1
4-Methyl-2-pentanone	108-10-1	8260B	ND		62	9.4	ug/kg	1
Methylcyclohexane	108-87-2	8260B	ND		31	3.8	ug/kg	1
Methylene chloride	75-09-2	8260B	ND		31	16	ug/kg	1
Styrene	100-42-5	8260B	ND		31	6.9	ug/kg	1
1,1,2,2-Tetrachloroethane	79-34-5	8260B	ND		31	2.9	ug/kg	1
Tetrachloroethene	127-18-4	8260B	ND		31	14	ug/kg	1
Toluene	108-88-3	8260B	ND		31	11	ug/kg	1
1,1,2-Trichloro-1,2,2-Trifluoroethane	76-13-1	8260B	ND		31	13	ug/kg	1
1,2,4-Trichlorobenzene	120-82-1	8260B	ND		31	11	ug/kg	1
1,1,1-Trichloroethane	71-55-6	8260B	ND		31	5.3	ug/kg	1
1,1,2-Trichloroethane	79-00-5	8260B	ND		31	4.9	ug/kg	1

PQL = Practical quantitation limit
B = Detected in the method blank
E = Quantitation of compound exceeded the calibration range
ND = Not detected at or above the MDL
J = Estimated result < PQL and ≥ MDL
P = The RPD between two GC columns exceeds 40%
Where applicable, all soil sample analysis are reported on a dry weight basis unless flagged with a "W"
N = Recovery is out of criteria
H = Out of holding time

Volatile Organic Compounds by GC/MS

Client: ARCADIS U.S., Inc.
Laboratory ID: LD09018-028
Description: F39SED01 (040810)
Matrix: Solid
Date Sampled: 04/08/2010 0900
% Solids: 72.2 04/11/2010 1236
Date Received: 04/10/2010

Run	Prep Method	Analytical Method	Dilution	Analysis Date	Analyst	Prep Date	Batch	Sample Wt.(g)
1	5035	8260B	1	04/17/2010 1646	DLB		31760	1.11

Parameter	CAS Number	Analytical Method	Result	Q	PQL	MDL	Units	Run
Trichloroethene	79-01-6	8260B	ND		31	12	ug/kg	1
Trichlorofluoromethane	75-69-4	8260B	ND		31	9.4	ug/kg	1
Vinyl chloride	75-01-4	8260B	ND		31	5.4	ug/kg	1
Xylenes (total)	1330-20-7	8260B	ND		31	18	ug/kg	1

Surrogate	Q	Run 1 % Recovery	Acceptance Limits
1,2-Dichloroethane-d4		81	53-142
Bromofluorobenzene		89	47-138
Toluene-d8		91	68-124

PQL = Practical quantitation limit
B = Detected in the method blank
E = Quantitation of compound exceeded the calibration range
ND = Not detected at or above the MDL
J = Estimated result < PQL and ≥ MDL
P = The RPD between two GC columns exceeds 40%
Where applicable, all soil sample analysis are reported on a dry weight basis unless flagged with a "W"
N = Recovery is out of criteria
H = Out of holding time

Semivolatile Organic Compounds by GC/MS

Client: ARCADIS U.S., Inc.
Laboratory ID: LD09018-028
Description: F39SED01 (040810)
Matrix: Solid
Date Sampled: 04/08/2010 0900
% Solids: 72.2 04/11/2010 1236
Date Received: 04/10/2010

Run	Prep Method	Analytical Method	Dilution	Analysis Date	Analyst	Prep Date	Batch
1	3550C	8270D	1	04/15/2010 0524	JGH	04/13/2010 0000	31355

Parameter	CAS Number	Analytical Method	Result	Q	PQL	MDL	Units	Run
Acenaphthene	83-32-9	8270D	ND		92	15	ug/kg	1
Acenaphthylene	208-96-8	8270D	ND		92	14	ug/kg	1
Acetophenone	98-86-2	8270D	ND		92	25	ug/kg	1
Anthracene	120-12-7	8270D	ND		92	10	ug/kg	1
Atrazine	1912-24-9	8270D	ND		92	23	ug/kg	1
Benzaldehyde	100-52-7	8270D	ND		92	23	ug/kg	1
Benzo(a)anthracene	56-55-3	8270D	ND		92	12	ug/kg	1
Benzo(a)pyrene	50-32-8	8270D	ND		92	13	ug/kg	1
Benzo(b)fluoranthene	205-99-2	8270D	ND		92	13	ug/kg	1
Benzo(g,h,i)perylene	191-24-2	8270D	ND		92	16	ug/kg	1
Benzo(k)fluoranthene	207-08-9	8270D	ND		92	13	ug/kg	1
1,1'-Biphenyl	92-52-4	8270D	ND		92	14	ug/kg	1
4-Bromophenyl phenyl ether	101-55-3	8270D	ND		92	13	ug/kg	1
Butyl benzyl phthalate	85-68-7	8270D	ND		180	60	ug/kg	1
Caprolactam	105-60-2	8270D	ND		92	23	ug/kg	1
Carbazole	86-74-8	8270D	ND		92	20	ug/kg	1
4-Chloro-3-methyl phenol	59-50-7	8270D	ND		92	12	ug/kg	1
4-Chloroaniline	106-47-8	8270D	ND		92	9.3	ug/kg	1
bis(2-Chloroethoxy)methane	111-91-1	8270D	ND		92	14	ug/kg	1
bis(2-Chloroethyl)ether	111-44-4	8270D	ND		92	13	ug/kg	1
bis(2-Chloroisopropyl)ether	108-60-1	8270D	ND		92	15	ug/kg	1
2-Chloronaphthalene	91-58-7	8270D	ND		92	15	ug/kg	1
2-Chlorophenol	95-57-8	8270D	ND		92	13	ug/kg	1
4-Chlorophenyl phenyl ether	7005-72-3	8270D	ND		92	16	ug/kg	1
Chrysene	218-01-9	8270D	ND		92	15	ug/kg	1
Dibenzo(a,h)anthracene	53-70-3	8270D	ND		92	12	ug/kg	1
Dibenzofuran	132-64-9	8270D	ND		92	14	ug/kg	1
3,3'-Dichlorobenzidine	91-94-1	8270D	ND		450	50	ug/kg	1
2,4-Dichlorophenol	120-83-2	8270D	ND		92	14	ug/kg	1
Diethylphthalate	84-66-2	8270D	ND		92	30	ug/kg	1
Dimethyl phthalate	131-11-3	8270D	ND		92	30	ug/kg	1
2,4-Dimethylphenol	105-67-9	8270D	ND		92	17	ug/kg	1
Di-n-butyl phthalate	84-74-2	8270D	ND		92	30	ug/kg	1
4,6-Dinitro-2-methylphenol	534-52-1	8270D	ND		450	180	ug/kg	1
2,4-Dinitrophenol	51-28-5	8270D	ND		450	150	ug/kg	1
2,4-Dinitrotoluene	121-14-2	8270D	ND		180	25	ug/kg	1
2,6-Dinitrotoluene	606-20-2	8270D	ND		180	24	ug/kg	1
Di-n-octylphthalate	117-84-0	8270D	ND		92	44	ug/kg	1
bis(2-Ethylhexyl)phthalate	117-81-7	8270D	ND		92	30	ug/kg	1
Fluoranthene	206-44-0	8270D	ND		92	14	ug/kg	1
Fluorene	86-73-7	8270D	ND		92	12	ug/kg	1
Hexachlorobenzene	118-74-1	8270D	ND		92	20	ug/kg	1
Hexachlorobutadiene	87-68-3	8270D	ND		92	15	ug/kg	1
Hexachlorocyclopentadiene	77-47-4	8270D	ND		450	34	ug/kg	1

PQL = Practical quantitation limit
B = Detected in the method blank
E = Quantitation of compound exceeded the calibration range
ND = Not detected at or above the MDL
J = Estimated result < PQL and ≥ MDL
P = The RPD between two GC columns exceeds 40%
Where applicable, all soil sample analysis are reported on a dry weight basis unless flagged with a "W"
N = Recovery is out of criteria
H = Out of holding time

Semivolatile Organic Compounds by GC/MS

Client: ARCADIS U.S., Inc.
Laboratory ID: LD09018-028
Description: F39SED01 (040810)
Matrix: Solid
Date Sampled: 04/08/2010 0900
% Solids: 72.2 04/11/2010 1236
Date Received: 04/10/2010

Run	Prep Method	Analytical Method	Dilution	Analysis Date	Analyst	Prep Date	Batch
1	3550C	8270D	1	04/15/2010 0524	JGH	04/13/2010 0000	31355

Parameter	CAS Number	Analytical Method	Result	Q	PQL	MDL	Units	Run
Hexachloroethane	67-72-1	8270D	ND		92	12	ug/kg	1
Indeno(1,2,3-c,d)pyrene	193-39-5	8270D	ND		92	13	ug/kg	1
Isophorone	78-59-1	8270D	ND		92	10	ug/kg	1
2-Methylnaphthalene	91-57-6	8270D	ND		92	14	ug/kg	1
2-Methylphenol	95-48-7	8270D	ND		92	8.3	ug/kg	1
3 & 4-Methylphenol	106-44-5	8270D	ND		180	16	ug/kg	1
Naphthalene	91-20-3	8270D	ND		92	14	ug/kg	1
2-Nitroaniline	88-74-4	8270D	ND		180	31	ug/kg	1
3-Nitroaniline	99-09-2	8270D	ND		180	53	ug/kg	1
4-Nitroaniline	100-01-6	8270D	ND		180	26	ug/kg	1
Nitrobenzene	98-95-3	8270D	ND		92	7.4	ug/kg	1
2-Nitrophenol	88-75-5	8270D	ND		180	25	ug/kg	1
4-Nitrophenol	100-02-7	8270D	ND		450	130	ug/kg	1
N-Nitrosodi-n-propylamine	621-64-7	8270D	ND		92	18	ug/kg	1
N-Nitrosodiphenylamine (Diphenylamine)	86-30-6	8270D	ND		92	11	ug/kg	1
Pentachlorophenol	87-86-5	8270D	ND		450	190	ug/kg	1
Phenanthrene	85-01-8	8270D	ND		92	12	ug/kg	1
Phenol	108-95-2	8270D	ND		92	12	ug/kg	1
Pyrene	129-00-0	8270D	ND		92	18	ug/kg	1
2,4,5-Trichlorophenol	95-95-4	8270D	ND		92	13	ug/kg	1
2,4,6-Trichlorophenol	88-06-2	8270D	ND		92	13	ug/kg	1

Surrogate	Q	Run 1 % Recovery	Acceptance Limits
2-Fluorobiphenyl		58	33-102
2-Fluorophenol		49	28-104
Nitrobenzene-d5		51	22-109
Phenol-d5		45	27-103
Terphenyl-d14		77	41-120
2,4,6-Tribromophenol		88	30-117

PQL = Practical quantitation limit
B = Detected in the method blank
E = Quantitation of compound exceeded the calibration range
ND = Not detected at or above the MDL
J = Estimated result < PQL and ≥ MDL
P = The RPD between two GC columns exceeds 40%
Where applicable, all soil sample analysis are reported on a dry weight basis unless flagged with a "W"
N = Recovery is out of criteria
H = Out of holding time

RCRA Metals

Client: ARCADIS U.S., Inc.	Laboratory ID: LD09018-028
Description: F39SED01 (040810)	Matrix: Solid
Date Sampled: 04/08/2010 0900	% Solids: 72.2 04/11/2010 1236
Date Received: 04/10/2010	

Run	Prep Method	Analytical Method	Dilution	Analysis Date	Analyst	Prep Date	Batch
1	3050B	6010C	1	04/14/2010 0226	CDF	04/12/2010 1945	31320
1		7471B	1	04/14/2010 2009	BNW	04/14/2010 1900	31322
2	3050B	6010C	1	04/14/2010 1723	KJC	04/12/2010 1945	31320

Parameter	CAS Number	Analytical Method	Result	Q	PQL	MDL	Units	Run
Arsenic	7440-38-2	6010C	0.57	J	0.63	0.24	mg/kg	1
Barium	7440-39-3	6010C	3.9		1.6	0.11	mg/kg	1
Cadmium	7440-43-9	6010C	0.14	B	0.13	0.013	mg/kg	1
Chromium	7440-47-3	6010C	3.0	B	0.32	0.064	mg/kg	1
Lead	7439-92-1	6010C	3.9		0.63	0.12	mg/kg	1
Mercury	7439-97-6	7471B	ND		0.11	0.0082	mg/kg	1
Selenium	7782-49-2	6010C	0.35	BJ	0.63	0.22	mg/kg	1
Silver	7440-22-4	6010C	ND		0.32	0.053	mg/kg	2

PQL = Practical quantitation limit
ND = Not detected at or above the MDL
Where applicable, all soil sample analysis are reported on a dry weight basis unless flagged with a "W"
B = Detected in the method blank
J = Estimated result < PQL and ≥ MDL
E = Quantitation of compound exceeded the calibration range
P = The RPD between two GC columns exceeds 40%
N = Recovery is out of criteria
H = Out of holding time

Volatile Organic Compounds by GC/MS

Client: ARCADIS U.S., Inc.
Laboratory ID: LD09018-029
Description: F39SED02 (040810)
Matrix: Solid
Date Sampled: 04/08/2010 1315
% Solids: 70.6 04/11/2010 1236
Date Received: 04/10/2010

Run	Prep Method	Analytical Method	Dilution	Analysis Date	Analyst	Prep Date	Batch	Sample Wt.(g)
1	5035	8260B	1	04/17/2010 1709	DLB		31760	3.71

Parameter	CAS Number	Analytical Method	Result	Q	PQL	MDL	Units	Run
Acetone	67-64-1	8260B	ND		38	13	ug/kg	1
Benzene	71-43-2	8260B	ND		9.5	2.1	ug/kg	1
Bromodichloromethane	75-27-4	8260B	ND		9.5	3.2	ug/kg	1
Bromoform	75-25-2	8260B	ND		9.5	1.3	ug/kg	1
Bromomethane (Methyl bromide)	74-83-9	8260B	ND		9.5	3.4	ug/kg	1
2-Butanone (MEK)	78-93-3	8260B	ND		19	4.6	ug/kg	1
Carbon disulfide	75-15-0	8260B	ND		9.5	2.5	ug/kg	1
Carbon tetrachloride	56-23-5	8260B	ND		9.5	3.4	ug/kg	1
Chlorobenzene	108-90-7	8260B	ND		9.5	3.2	ug/kg	1
Chloroethane	75-00-3	8260B	ND		9.5	2.5	ug/kg	1
Chloroform	67-66-3	8260B	ND		9.5	1.6	ug/kg	1
Chloromethane (Methyl chloride)	74-87-3	8260B	ND		9.5	1.9	ug/kg	1
Cyclohexane	110-82-7	8260B	ND		9.5	1.3	ug/kg	1
1,2-Dibromo-3-chloropropane (DBCP)	96-12-8	8260B	ND		9.5	2.9	ug/kg	1
Dibromochloromethane	124-48-1	8260B	ND		9.5	3.2	ug/kg	1
1,2-Dibromoethane (EDB)	106-93-4	8260B	ND		9.5	1.6	ug/kg	1
1,2-Dichlorobenzene	95-50-1	8260B	ND		9.5	3.2	ug/kg	1
1,3-Dichlorobenzene	541-73-1	8260B	ND		9.5	3.2	ug/kg	1
1,4-Dichlorobenzene	106-46-7	8260B	ND		9.5	3.2	ug/kg	1
Dichlorodifluoromethane	75-71-8	8260B	ND		9.5	3.1	ug/kg	1
1,1-Dichloroethane	75-34-3	8260B	ND		9.5	1.4	ug/kg	1
1,2-Dichloroethane	107-06-2	8260B	ND		9.5	1.9	ug/kg	1
1,1-Dichloroethene	75-35-4	8260B	ND		9.5	3.2	ug/kg	1
cis-1,2-Dichloroethene	156-59-2	8260B	ND		9.5	1.5	ug/kg	1
trans-1,2-Dichloroethene	156-60-5	8260B	ND		9.5	2.9	ug/kg	1
1,2-Dichloropropane	78-87-5	8260B	ND		9.5	1.7	ug/kg	1
cis-1,3-Dichloropropene	10061-01-5	8260B	ND		9.5	1.3	ug/kg	1
trans-1,3-Dichloropropene	10061-02-6	8260B	ND		9.5	1.6	ug/kg	1
Ethylbenzene	100-41-4	8260B	ND		9.5	3.2	ug/kg	1
2-Hexanone	591-78-6	8260B	ND		19	2.5	ug/kg	1
Isopropylbenzene	98-82-8	8260B	ND		9.5	1.5	ug/kg	1
Methyl acetate	79-20-9	8260B	ND		9.5	1.3	ug/kg	1
Methyl tertiary butyl ether (MTBE)	1634-04-4	8260B	ND		9.5	0.76	ug/kg	1
4-Methyl-2-pentanone	108-10-1	8260B	ND		19	2.9	ug/kg	1
Methylcyclohexane	108-87-2	8260B	ND		9.5	1.2	ug/kg	1
Methylene chloride	75-09-2	8260B	ND		9.5	5.0	ug/kg	1
Styrene	100-42-5	8260B	ND		9.5	2.1	ug/kg	1
1,1,2,2-Tetrachloroethane	79-34-5	8260B	ND		9.5	0.90	ug/kg	1
Tetrachloroethene	127-18-4	8260B	ND		9.5	4.4	ug/kg	1
Toluene	108-88-3	8260B	ND		9.5	3.2	ug/kg	1
1,1,2-Trichloro-1,2,2-Trifluoroethane	76-13-1	8260B	ND		9.5	4.0	ug/kg	1
1,2,4-Trichlorobenzene	120-82-1	8260B	ND		9.5	3.2	ug/kg	1
1,1,1-Trichloroethane	71-55-6	8260B	ND		9.5	1.6	ug/kg	1
1,1,2-Trichloroethane	79-00-5	8260B	ND		9.5	1.5	ug/kg	1

PQL = Practical quantitation limit
B = Detected in the method blank
E = Quantitation of compound exceeded the calibration range
ND = Not detected at or above the MDL
J = Estimated result < PQL and ≥ MDL
P = The RPD between two GC columns exceeds 40%
Where applicable, all soil sample analysis are reported on a dry weight basis unless flagged with a "W"
N = Recovery is out of criteria
H = Out of holding time

Volatile Organic Compounds by GC/MS

Client: ARCADIS U.S., Inc.
Laboratory ID: LD09018-029
Description: F39SED02 (040810)
Matrix: Solid
Date Sampled: 04/08/2010 1315
% Solids: 70.6 04/11/2010 1236
Date Received: 04/10/2010

Run	Prep Method	Analytical Method	Dilution	Analysis Date	Analyst	Prep Date	Batch	Sample Wt.(g)
1	5035	8260B	1	04/17/2010 1709	DLB		31760	3.71

Parameter	CAS Number	Analytical Method	Result	Q	PQL	MDL	Units	Run
Trichloroethene	79-01-6	8260B	ND		9.5	3.6	ug/kg	1
Trichlorofluoromethane	75-69-4	8260B	ND		9.5	2.9	ug/kg	1
Vinyl chloride	75-01-4	8260B	ND		9.5	1.6	ug/kg	1
Xylenes (total)	1330-20-7	8260B	ND		9.5	5.5	ug/kg	1

Surrogate	Q	Run 1 % Recovery	Acceptance Limits
1,2-Dichloroethane-d4		78	53-142
Bromofluorobenzene		89	47-138
Toluene-d8		92	68-124

PQL = Practical quantitation limit
B = Detected in the method blank
E = Quantitation of compound exceeded the calibration range
ND = Not detected at or above the MDL
J = Estimated result < PQL and ≥ MDL
P = The RPD between two GC columns exceeds 40%
Where applicable, all soil sample analysis are reported on a dry weight basis unless flagged with a "W"
N = Recovery is out of criteria
H = Out of holding time

Semivolatile Organic Compounds by GC/MS

Client: ARCADIS U.S., Inc.
Laboratory ID: LD09018-029
Description: F39SED02 (040810)
Matrix: Solid
Date Sampled: 04/08/2010 1315
% Solids: 70.6 04/11/2010 1236
Date Received: 04/10/2010

Run	Prep Method	Analytical Method	Dilution	Analysis Date	Analyst	Prep Date	Batch
1	3550C	8270D	1	04/15/2010 1458	JGH	04/13/2010 0000	31355

Parameter	CAS Number	Analytical Method	Result	Q	PQL	MDL	Units	Run
Acenaphthene	83-32-9	8270D	ND		93	15	ug/kg	1
Acenaphthylene	208-96-8	8270D	ND		93	14	ug/kg	1
Acetophenone	98-86-2	8270D	ND		93	25	ug/kg	1
Anthracene	120-12-7	8270D	ND		93	10	ug/kg	1
Atrazine	1912-24-9	8270D	ND		93	24	ug/kg	1
Benzaldehyde	100-52-7	8270D	ND		93	24	ug/kg	1
Benzo(a)anthracene	56-55-3	8270D	ND		93	12	ug/kg	1
Benzo(a)pyrene	50-32-8	8270D	ND		93	13	ug/kg	1
Benzo(b)fluoranthene	205-99-2	8270D	ND		93	13	ug/kg	1
Benzo(g,h,i)perylene	191-24-2	8270D	ND		93	16	ug/kg	1
Benzo(k)fluoranthene	207-08-9	8270D	ND		93	13	ug/kg	1
1,1'-Biphenyl	92-52-4	8270D	ND		93	14	ug/kg	1
4-Bromophenyl phenyl ether	101-55-3	8270D	ND		93	14	ug/kg	1
Butyl benzyl phthalate	85-68-7	8270D	ND		180	61	ug/kg	1
Caprolactam	105-60-2	8270D	ND		93	24	ug/kg	1
Carbazole	86-74-8	8270D	ND		93	20	ug/kg	1
4-Chloro-3-methyl phenol	59-50-7	8270D	ND		93	12	ug/kg	1
4-Chloroaniline	106-47-8	8270D	ND		93	9.4	ug/kg	1
bis(2-Chloroethoxy)methane	111-91-1	8270D	ND		93	14	ug/kg	1
bis(2-Chloroethyl)ether	111-44-4	8270D	ND		93	13	ug/kg	1
bis(2-Chloroisopropyl)ether	108-60-1	8270D	ND		93	15	ug/kg	1
2-Chloronaphthalene	91-58-7	8270D	ND		93	15	ug/kg	1
2-Chlorophenol	95-57-8	8270D	ND		93	13	ug/kg	1
4-Chlorophenyl phenyl ether	7005-72-3	8270D	ND		93	16	ug/kg	1
Chrysene	218-01-9	8270D	ND		93	15	ug/kg	1
Dibenzo(a,h)anthracene	53-70-3	8270D	ND		93	13	ug/kg	1
Dibenzofuran	132-64-9	8270D	ND		93	15	ug/kg	1
3,3'-Dichlorobenzidine	91-94-1	8270D	ND		460	50	ug/kg	1
2,4-Dichlorophenol	120-83-2	8270D	ND		93	14	ug/kg	1
Diethylphthalate	84-66-2	8270D	ND		93	31	ug/kg	1
Dimethyl phthalate	131-11-3	8270D	ND		93	31	ug/kg	1
2,4-Dimethylphenol	105-67-9	8270D	ND		93	17	ug/kg	1
Di-n-butyl phthalate	84-74-2	8270D	ND		93	31	ug/kg	1
4,6-Dinitro-2-methylphenol	534-52-1	8270D	ND		460	180	ug/kg	1
2,4-Dinitrophenol	51-28-5	8270D	ND		460	160	ug/kg	1
2,4-Dinitrotoluene	121-14-2	8270D	ND		180	25	ug/kg	1
2,6-Dinitrotoluene	606-20-2	8270D	ND		180	24	ug/kg	1
Di-n-octylphthalate	117-84-0	8270D	ND		93	45	ug/kg	1
bis(2-Ethylhexyl)phthalate	117-81-7	8270D	93		93	31	ug/kg	1
Fluoranthene	206-44-0	8270D	ND		93	15	ug/kg	1
Fluorene	86-73-7	8270D	ND		93	13	ug/kg	1
Hexachlorobenzene	118-74-1	8270D	ND		93	20	ug/kg	1
Hexachlorobutadiene	87-68-3	8270D	ND		93	15	ug/kg	1
Hexachlorocyclopentadiene	77-47-4	8270D	ND		460	34	ug/kg	1

PQL = Practical quantitation limit
B = Detected in the method blank
E = Quantitation of compound exceeded the calibration range
ND = Not detected at or above the MDL
J = Estimated result < PQL and ≥ MDL
P = The RPD between two GC columns exceeds 40%
Where applicable, all soil sample analysis are reported on a dry weight basis unless flagged with a "W"
N = Recovery is out of criteria
H = Out of holding time

Semivolatile Organic Compounds by GC/MS

Client: ARCADIS U.S., Inc.
Laboratory ID: LD09018-029
Description: F39SED02 (040810)
Matrix: Solid
Date Sampled: 04/08/2010 1315
% Solids: 70.6 04/11/2010 1236
Date Received: 04/10/2010

Run	Prep Method	Analytical Method	Dilution	Analysis Date	Analyst	Prep Date	Batch
1	3550C	8270D	1	04/15/2010 1458	JGH	04/13/2010 0000	31355

Parameter	CAS Number	Analytical Method	Result	Q	PQL	MDL	Units	Run
Hexachloroethane	67-72-1	8270D	ND		93	12	ug/kg	1
Indeno(1,2,3-c,d)pyrene	193-39-5	8270D	ND		93	14	ug/kg	1
Isophorone	78-59-1	8270D	ND		93	10	ug/kg	1
2-Methylnaphthalene	91-57-6	8270D	ND		93	14	ug/kg	1
2-Methylphenol	95-48-7	8270D	ND		93	8.4	ug/kg	1
3 & 4-Methylphenol	106-44-5	8270D	160	J	180	17	ug/kg	1
Naphthalene	91-20-3	8270D	ND		93	14	ug/kg	1
2-Nitroaniline	88-74-4	8270D	ND		180	32	ug/kg	1
3-Nitroaniline	99-09-2	8270D	ND		180	54	ug/kg	1
4-Nitroaniline	100-01-6	8270D	ND		180	26	ug/kg	1
Nitrobenzene	98-95-3	8270D	ND		93	7.5	ug/kg	1
2-Nitrophenol	88-75-5	8270D	ND		180	26	ug/kg	1
4-Nitrophenol	100-02-7	8270D	ND		460	130	ug/kg	1
N-Nitrosodi-n-propylamine	621-64-7	8270D	ND		93	18	ug/kg	1
N-Nitrosodiphenylamine (Diphenylamine)	86-30-6	8270D	ND		93	11	ug/kg	1
Pentachlorophenol	87-86-5	8270D	ND		460	190	ug/kg	1
Phenanthrene	85-01-8	8270D	ND		93	12	ug/kg	1
Phenol	108-95-2	8270D	ND		93	13	ug/kg	1
Pyrene	129-00-0	8270D	ND		93	18	ug/kg	1
2,4,5-Trichlorophenol	95-95-4	8270D	ND		93	13	ug/kg	1
2,4,6-Trichlorophenol	88-06-2	8270D	ND		93	14	ug/kg	1

Surrogate	Q	Run 1 % Recovery	Acceptance Limits
2-Fluorobiphenyl		53	33-102
2-Fluorophenol		47	28-104
Nitrobenzene-d5		49	22-109
Phenol-d5		46	27-103
Terphenyl-d14		62	41-120
2,4,6-Tribromophenol		82	30-117

PQL = Practical quantitation limit
B = Detected in the method blank
E = Quantitation of compound exceeded the calibration range
ND = Not detected at or above the MDL
J = Estimated result < PQL and ≥ MDL
P = The RPD between two GC columns exceeds 40%
Where applicable, all soil sample analysis are reported on a dry weight basis unless flagged with a "W"
N = Recovery is out of criteria
H = Out of holding time

RCRA Metals

Client: ARCADIS U.S., Inc.	Laboratory ID: LD09018-029
Description: F39SED02 (040810)	Matrix: Solid
Date Sampled: 04/08/2010 1315	% Solids: 70.6 04/11/2010 1236
Date Received: 04/10/2010	

Run	Prep Method	Analytical Method	Dilution	Analysis Date	Analyst	Prep Date	Batch
1	3050B	6010C	1	04/14/2010 0245	CDF	04/12/2010 1945	31320
1		7471B	1	04/14/2010 2011	BNW	04/14/2010 1900	31322
2	3050B	6010C	1	04/14/2010 1747	KJC	04/12/2010 1945	31320

Parameter	CAS Number	Analytical Method	Result	Q	PQL	MDL	Units	Run
Arsenic	7440-38-2	6010C	0.52	J	0.70	0.26	mg/kg	1
Barium	7440-39-3	6010C	6.9		1.8	0.13	mg/kg	1
Cadmium	7440-43-9	6010C	0.11	BJ	0.14	0.015	mg/kg	1
Chromium	7440-47-3	6010C	1.9	B	0.35	0.071	mg/kg	1
Lead	7439-92-1	6010C	2.6		0.70	0.13	mg/kg	1
Mercury	7439-97-6	7471B	0.0098	J	0.12	0.0082	mg/kg	1
Selenium	7782-49-2	6010C	0.40	BJ	0.70	0.24	mg/kg	1
Silver	7440-22-4	6010C	ND		0.35	0.059	mg/kg	2

PQL = Practical quantitation limit
ND = Not detected at or above the MDL
B = Detected in the method blank
J = Estimated result < PQL and ≥ MDL
E = Quantitation of compound exceeded the calibration range
P = The RPD between two GC columns exceeds 40%
Where applicable, all soil sample analysis are reported on a dry weight basis unless flagged with a "W"
N = Recovery is out of criteria
H = Out of holding time

Volatile Organic Compounds by GC/MS

Client: ARCADIS U.S., Inc.
Laboratory ID: LD09018-030
Description: F39SED03 (040810)
Matrix: Solid
Date Sampled: 04/08/2010 1415
% Solids: 73.3 04/11/2010 1236
Date Received: 04/10/2010

Run	Prep Method	Analytical Method	Dilution	Analysis Date	Analyst	Prep Date	Batch	Sample Wt.(g)
1	5035	8260B	1	04/17/2010 1732	DLB		31760	4.71

Parameter	CAS Number	Analytical Method	Result	Q	PQL	MDL	Units	Run
Acetone	67-64-1	8260B	20	J	29	9.7	ug/kg	1
Benzene	71-43-2	8260B	ND		7.2	1.6	ug/kg	1
Bromodichloromethane	75-27-4	8260B	ND		7.2	2.5	ug/kg	1
Bromoform	75-25-2	8260B	ND		7.2	1.0	ug/kg	1
Bromomethane (Methyl bromide)	74-83-9	8260B	ND		7.2	2.6	ug/kg	1
2-Butanone (MEK)	78-93-3	8260B	ND		14	3.5	ug/kg	1
Carbon disulfide	75-15-0	8260B	ND		7.2	1.9	ug/kg	1
Carbon tetrachloride	56-23-5	8260B	ND		7.2	2.6	ug/kg	1
Chlorobenzene	108-90-7	8260B	ND		7.2	2.5	ug/kg	1
Chloroethane	75-00-3	8260B	ND		7.2	1.9	ug/kg	1
Chloroform	67-66-3	8260B	ND		7.2	1.2	ug/kg	1
Chloromethane (Methyl chloride)	74-87-3	8260B	ND		7.2	1.4	ug/kg	1
Cyclohexane	110-82-7	8260B	ND		7.2	0.98	ug/kg	1
1,2-Dibromo-3-chloropropane (DBCP)	96-12-8	8260B	ND		7.2	2.2	ug/kg	1
Dibromochloromethane	124-48-1	8260B	ND		7.2	2.5	ug/kg	1
1,2-Dibromoethane (EDB)	106-93-4	8260B	ND		7.2	1.2	ug/kg	1
1,2-Dichlorobenzene	95-50-1	8260B	ND		7.2	2.5	ug/kg	1
1,3-Dichlorobenzene	541-73-1	8260B	ND		7.2	2.5	ug/kg	1
1,4-Dichlorobenzene	106-46-7	8260B	ND		7.2	2.5	ug/kg	1
Dichlorodifluoromethane	75-71-8	8260B	ND		7.2	2.3	ug/kg	1
1,1-Dichloroethane	75-34-3	8260B	ND		7.2	1.1	ug/kg	1
1,2-Dichloroethane	107-06-2	8260B	ND		7.2	1.4	ug/kg	1
1,1-Dichloroethene	75-35-4	8260B	ND		7.2	2.5	ug/kg	1
cis-1,2-Dichloroethene	156-59-2	8260B	ND		7.2	1.1	ug/kg	1
trans-1,2-Dichloroethene	156-60-5	8260B	ND		7.2	2.2	ug/kg	1
1,2-Dichloropropane	78-87-5	8260B	ND		7.2	1.3	ug/kg	1
cis-1,3-Dichloropropene	10061-01-5	8260B	ND		7.2	0.98	ug/kg	1
trans-1,3-Dichloropropene	10061-02-6	8260B	ND		7.2	1.2	ug/kg	1
Ethylbenzene	100-41-4	8260B	ND		7.2	2.5	ug/kg	1
2-Hexanone	591-78-6	8260B	ND		14	1.9	ug/kg	1
Isopropylbenzene	98-82-8	8260B	ND		7.2	1.2	ug/kg	1
Methyl acetate	79-20-9	8260B	ND		7.2	0.97	ug/kg	1
Methyl tertiary butyl ether (MTBE)	1634-04-4	8260B	ND		7.2	0.58	ug/kg	1
4-Methyl-2-pentanone	108-10-1	8260B	ND		14	2.2	ug/kg	1
Methylcyclohexane	108-87-2	8260B	ND		7.2	0.88	ug/kg	1
Methylene chloride	75-09-2	8260B	ND		7.2	3.8	ug/kg	1
Styrene	100-42-5	8260B	ND		7.2	1.6	ug/kg	1
1,1,2,2-Tetrachloroethane	79-34-5	8260B	ND		7.2	0.68	ug/kg	1
Tetrachloroethene	127-18-4	8260B	ND		7.2	3.3	ug/kg	1
Toluene	108-88-3	8260B	ND		7.2	2.5	ug/kg	1
1,1,2-Trichloro-1,2,2-Trifluoroethane	76-13-1	8260B	ND		7.2	3.0	ug/kg	1
1,2,4-Trichlorobenzene	120-82-1	8260B	ND		7.2	2.5	ug/kg	1
1,1,1-Trichloroethane	71-55-6	8260B	ND		7.2	1.2	ug/kg	1
1,1,2-Trichloroethane	79-00-5	8260B	ND		7.2	1.1	ug/kg	1

PQL = Practical quantitation limit
B = Detected in the method blank
E = Quantitation of compound exceeded the calibration range
ND = Not detected at or above the MDL
J = Estimated result < PQL and ≥ MDL
P = The RPD between two GC columns exceeds 40%
Where applicable, all soil sample analysis are reported on a dry weight basis unless flagged with a "W"
N = Recovery is out of criteria
H = Out of holding time

Volatile Organic Compounds by GC/MS

Client: ARCADIS U.S., Inc.	Laboratory ID: LD09018-030
Description: F39SED03 (040810)	Matrix: Solid
Date Sampled: 04/08/2010 1415	% Solids: 73.3 04/11/2010 1236
Date Received: 04/10/2010	

Run	Prep Method	Analytical Method	Dilution	Analysis Date	Analyst	Prep Date	Batch	Sample Wt.(g)
1	5035	8260B	1	04/17/2010 1732	DLB		31760	4.71

Parameter	CAS Number	Analytical Method	Result	Q	PQL	MDL	Units	Run
Trichloroethene	79-01-6	8260B	2.9	J	7.2	2.8	ug/kg	1
Trichlorofluoromethane	75-69-4	8260B	ND		7.2	2.2	ug/kg	1
Vinyl chloride	75-01-4	8260B	ND		7.2	1.2	ug/kg	1
Xylenes (total)	1330-20-7	8260B	ND		7.2	4.2	ug/kg	1

Surrogate	Q	Run 1 % Recovery	Acceptance Limits
1,2-Dichloroethane-d4		80	53-142
Bromofluorobenzene		91	47-138
Toluene-d8		93	68-124

PQL = Practical quantitation limit
ND = Not detected at or above the MDL
Where applicable, all soil sample analysis are reported on a dry weight basis unless flagged with a "W"
B = Detected in the method blank
J = Estimated result < PQL and ≥ MDL
E = Quantitation of compound exceeded the calibration range
P = The RPD between two GC columns exceeds 40%
N = Recovery is out of criteria
H = Out of holding time

Semivolatile Organic Compounds by GC/MS

Client: ARCADIS U.S., Inc.
Laboratory ID: LD09018-030
Description: F39SED03 (040810)
Matrix: Solid
Date Sampled: 04/08/2010 1415
% Solids: 73.3 04/11/2010 1236
Date Received: 04/10/2010

Run	Prep Method	Analytical Method	Dilution	Analysis Date	Analyst	Prep Date	Batch
1	3550C	8270D	1	04/15/2010 1301	JGH	04/13/2010 0000	31355

Parameter	CAS Number	Analytical Method	Result	Q	PQL	MDL	Units	Run
Acenaphthene	83-32-9	8270D	ND		89	14	ug/kg	1
Acenaphthylene	208-96-8	8270D	ND		89	14	ug/kg	1
Acetophenone	98-86-2	8270D	ND		89	24	ug/kg	1
Anthracene	120-12-7	8270D	ND		89	9.8	ug/kg	1
Atrazine	1912-24-9	8270D	ND		89	23	ug/kg	1
Benzaldehyde	100-52-7	8270D	ND		89	23	ug/kg	1
Benzo(a)anthracene	56-55-3	8270D	ND		89	12	ug/kg	1
Benzo(a)pyrene	50-32-8	8270D	ND		89	12	ug/kg	1
Benzo(b)fluoranthene	205-99-2	8270D	ND		89	13	ug/kg	1
Benzo(g,h,i)perylene	191-24-2	8270D	ND		89	15	ug/kg	1
Benzo(k)fluoranthene	207-08-9	8270D	ND		89	13	ug/kg	1
1,1'-Biphenyl	92-52-4	8270D	ND		89	13	ug/kg	1
4-Bromophenyl phenyl ether	101-55-3	8270D	ND		89	13	ug/kg	1
Butyl benzyl phthalate	85-68-7	8270D	ND		170	58	ug/kg	1
Caprolactam	105-60-2	8270D	ND		89	23	ug/kg	1
Carbazole	86-74-8	8270D	ND		89	19	ug/kg	1
4-Chloro-3-methyl phenol	59-50-7	8270D	ND		89	11	ug/kg	1
4-Chloroaniline	106-47-8	8270D	ND		89	9.0	ug/kg	1
bis(2-Chloroethoxy)methane	111-91-1	8270D	ND		89	13	ug/kg	1
bis(2-Chloroethyl)ether	111-44-4	8270D	ND		89	12	ug/kg	1
bis(2-Chloroisopropyl)ether	108-60-1	8270D	ND		89	15	ug/kg	1
2-Chloronaphthalene	91-58-7	8270D	ND		89	15	ug/kg	1
2-Chlorophenol	95-57-8	8270D	ND		89	12	ug/kg	1
4-Chlorophenyl phenyl ether	7005-72-3	8270D	ND		89	15	ug/kg	1
Chrysene	218-01-9	8270D	ND		89	15	ug/kg	1
Dibenzo(a,h)anthracene	53-70-3	8270D	ND		89	12	ug/kg	1
Dibenzofuran	132-64-9	8270D	ND		89	14	ug/kg	1
3,3'-Dichlorobenzidine	91-94-1	8270D	ND		440	48	ug/kg	1
2,4-Dichlorophenol	120-83-2	8270D	ND		89	14	ug/kg	1
Diethylphthalate	84-66-2	8270D	ND		89	29	ug/kg	1
Dimethyl phthalate	131-11-3	8270D	ND		89	29	ug/kg	1
2,4-Dimethylphenol	105-67-9	8270D	ND		89	17	ug/kg	1
Di-n-butyl phthalate	84-74-2	8270D	ND		89	29	ug/kg	1
4,6-Dinitro-2-methylphenol	534-52-1	8270D	ND		440	170	ug/kg	1
2,4-Dinitrophenol	51-28-5	8270D	ND		440	150	ug/kg	1
2,4-Dinitrotoluene	121-14-2	8270D	ND		170	24	ug/kg	1
2,6-Dinitrotoluene	606-20-2	8270D	ND		170	23	ug/kg	1
Di-n-octylphthalate	117-84-0	8270D	ND		89	42	ug/kg	1
bis(2-Ethylhexyl)phthalate	117-81-7	8270D	ND		89	29	ug/kg	1
Fluoranthene	206-44-0	8270D	ND		89	14	ug/kg	1
Fluorene	86-73-7	8270D	ND		89	12	ug/kg	1
Hexachlorobenzene	118-74-1	8270D	ND		89	19	ug/kg	1
Hexachlorobutadiene	87-68-3	8270D	ND		89	15	ug/kg	1
Hexachlorocyclopentadiene	77-47-4	8270D	ND		440	33	ug/kg	1

PQL = Practical quantitation limit
B = Detected in the method blank
E = Quantitation of compound exceeded the calibration range
ND = Not detected at or above the MDL
J = Estimated result < PQL and ≥ MDL
P = The RPD between two GC columns exceeds 40%
Where applicable, all soil sample analysis are reported on a dry weight basis unless flagged with a "W"
N = Recovery is out of criteria
H = Out of holding time

Semivolatile Organic Compounds by GC/MS

Client: ARCADIS U.S., Inc.
Laboratory ID: LD09018-030
Description: F39SED03 (040810)
Matrix: Solid
Date Sampled: 04/08/2010 1415
% Solids: 73.3 04/11/2010 1236
Date Received: 04/10/2010

Run	Prep Method	Analytical Method	Dilution	Analysis Date	Analyst	Prep Date	Batch
1	3550C	8270D	1	04/15/2010 1301	JGH	04/13/2010 0000	31355

Parameter	CAS Number	Analytical Method	Result	Q	PQL	MDL	Units	Run
Hexachloroethane	67-72-1	8270D	ND		89	12	ug/kg	1
Indeno(1,2,3-c,d)pyrene	193-39-5	8270D	ND		89	13	ug/kg	1
Isophorone	78-59-1	8270D	ND		89	9.8	ug/kg	1
2-Methylnaphthalene	91-57-6	8270D	ND		89	13	ug/kg	1
2-Methylphenol	95-48-7	8270D	ND		89	8.0	ug/kg	1
3 & 4-Methylphenol	106-44-5	8270D	ND		170	16	ug/kg	1
Naphthalene	91-20-3	8270D	ND		89	14	ug/kg	1
2-Nitroaniline	88-74-4	8270D	ND		170	30	ug/kg	1
3-Nitroaniline	99-09-2	8270D	ND		170	51	ug/kg	1
4-Nitroaniline	100-01-6	8270D	ND		170	25	ug/kg	1
Nitrobenzene	98-95-3	8270D	ND		89	7.1	ug/kg	1
2-Nitrophenol	88-75-5	8270D	ND		170	24	ug/kg	1
4-Nitrophenol	100-02-7	8270D	ND		440	130	ug/kg	1
N-Nitrosodi-n-propylamine	621-64-7	8270D	ND		89	17	ug/kg	1
N-Nitrosodiphenylamine (Diphenylamine)	86-30-6	8270D	ND		89	11	ug/kg	1
Pentachlorophenol	87-86-5	8270D	ND		440	180	ug/kg	1
Phenanthrene	85-01-8	8270D	ND		89	12	ug/kg	1
Phenol	108-95-2	8270D	ND		89	12	ug/kg	1
Pyrene	129-00-0	8270D	ND		89	18	ug/kg	1
2,4,5-Trichlorophenol	95-95-4	8270D	ND		89	12	ug/kg	1
2,4,6-Trichlorophenol	88-06-2	8270D	ND		89	13	ug/kg	1

Surrogate	Q	Run 1 % Recovery	Acceptance Limits
2-Fluorobiphenyl		66	33-102
2-Fluorophenol		63	28-104
Nitrobenzene-d5		63	22-109
Phenol-d5		59	27-103
Terphenyl-d14		75	41-120
2,4,6-Tribromophenol		98	30-117

PQL = Practical quantitation limit
B = Detected in the method blank
E = Quantitation of compound exceeded the calibration range
ND = Not detected at or above the MDL
J = Estimated result < PQL and ≥ MDL
P = The RPD between two GC columns exceeds 40%
Where applicable, all soil sample analysis are reported on a dry weight basis unless flagged with a "W"
N = Recovery is out of criteria
H = Out of holding time

RCRA Metals

Client: ARCADIS U.S., Inc.	Laboratory ID: LD09018-030
Description: F39SED03 (040810)	Matrix: Solid
Date Sampled: 04/08/2010 1415	% Solids: 73.3 04/11/2010 1236
Date Received: 04/10/2010	

Run	Prep Method	Analytical Method	Dilution	Analysis Date	Analyst	Prep Date	Batch
1	3050B	6010C	1	04/14/2010 0255	CDF	04/12/2010 1945	31320
1		7471B	1	04/14/2010 2014	BNW	04/14/2010 1900	31322
2	3050B	6010C	1	04/14/2010 1759	KJC	04/12/2010 1945	31320

Parameter	CAS Number	Analytical Method	Result	Q	PQL	MDL	Units	Run
Arsenic	7440-38-2	6010C	1.0		0.65	0.24	mg/kg	2
Barium	7440-39-3	6010C	5.4		1.7	0.12	mg/kg	1
Cadmium	7440-43-9	6010C	0.096	BJ	0.13	0.014	mg/kg	1
Chromium	7440-47-3	6010C	6.3	B	0.33	0.066	mg/kg	1
Lead	7439-92-1	6010C	9.3		0.65	0.12	mg/kg	1
Mercury	7439-97-6	7471B	0.062	J	0.11	0.0080	mg/kg	1
Selenium	7782-49-2	6010C	0.51	BJ	0.65	0.23	mg/kg	1
Silver	7440-22-4	6010C	ND		0.33	0.055	mg/kg	2

PQL = Practical quantitation limit
ND = Not detected at or above the MDL
B = Detected in the method blank
J = Estimated result < PQL and ≥ MDL
E = Quantitation of compound exceeded the calibration range
P = The RPD between two GC columns exceeds 40%
Where applicable, all soil sample analysis are reported on a dry weight basis unless flagged with a "W"
N = Recovery is out of criteria
H = Out of holding time

Volatile Organic Compounds by GC/MS

Client: ARCADIS U.S., Inc.
Laboratory ID: LD09018-031
Description: F39SED04 (040810)
Matrix: Solid
Date Sampled: 04/08/2010 1515
% Solids: 79.1 04/11/2010 1236
Date Received: 04/10/2010

Run	Prep Method	Analytical Method	Dilution	Analysis Date	Analyst	Prep Date	Batch	Sample Wt.(g)
1	5035	8260B	1	04/17/2010 1756	DLB		31760	4.73

Parameter	CAS Number	Analytical Method	Result	Q	PQL	MDL	Units	Run
Acetone	67-64-1	8260B	47		27	9.0	ug/kg	1
Benzene	71-43-2	8260B	ND		6.7	1.5	ug/kg	1
Bromodichloromethane	75-27-4	8260B	ND		6.7	2.3	ug/kg	1
Bromoform	75-25-2	8260B	ND		6.7	0.94	ug/kg	1
Bromomethane (Methyl bromide)	74-83-9	8260B	ND		6.7	2.4	ug/kg	1
2-Butanone (MEK)	78-93-3	8260B	ND		13	3.2	ug/kg	1
Carbon disulfide	75-15-0	8260B	ND		6.7	1.7	ug/kg	1
Carbon tetrachloride	56-23-5	8260B	ND		6.7	2.4	ug/kg	1
Chlorobenzene	108-90-7	8260B	ND		6.7	2.3	ug/kg	1
Chloroethane	75-00-3	8260B	ND		6.7	1.7	ug/kg	1
Chloroform	67-66-3	8260B	ND		6.7	1.1	ug/kg	1
Chloromethane (Methyl chloride)	74-87-3	8260B	ND		6.7	1.3	ug/kg	1
Cyclohexane	110-82-7	8260B	ND		6.7	0.90	ug/kg	1
1,2-Dibromo-3-chloropropane (DBCP)	96-12-8	8260B	ND		6.7	2.0	ug/kg	1
Dibromochloromethane	124-48-1	8260B	ND		6.7	2.3	ug/kg	1
1,2-Dibromoethane (EDB)	106-93-4	8260B	ND		6.7	1.1	ug/kg	1
1,2-Dichlorobenzene	95-50-1	8260B	ND		6.7	2.3	ug/kg	1
1,3-Dichlorobenzene	541-73-1	8260B	ND		6.7	2.3	ug/kg	1
1,4-Dichlorobenzene	106-46-7	8260B	ND		6.7	2.3	ug/kg	1
Dichlorodifluoromethane	75-71-8	8260B	ND		6.7	2.1	ug/kg	1
1,1-Dichloroethane	75-34-3	8260B	ND		6.7	0.98	ug/kg	1
1,2-Dichloroethane	107-06-2	8260B	ND		6.7	1.3	ug/kg	1
1,1-Dichloroethene	75-35-4	8260B	ND		6.7	2.3	ug/kg	1
cis-1,2-Dichloroethene	156-59-2	8260B	ND		6.7	1.0	ug/kg	1
trans-1,2-Dichloroethene	156-60-5	8260B	ND		6.7	2.0	ug/kg	1
1,2-Dichloropropane	78-87-5	8260B	ND		6.7	1.2	ug/kg	1
cis-1,3-Dichloropropene	10061-01-5	8260B	ND		6.7	0.91	ug/kg	1
trans-1,3-Dichloropropene	10061-02-6	8260B	ND		6.7	1.1	ug/kg	1
Ethylbenzene	100-41-4	8260B	ND		6.7	2.3	ug/kg	1
2-Hexanone	591-78-6	8260B	ND		13	1.7	ug/kg	1
Isopropylbenzene	98-82-8	8260B	ND		6.7	1.1	ug/kg	1
Methyl acetate	79-20-9	8260B	ND		6.7	0.90	ug/kg	1
Methyl tertiary butyl ether (MTBE)	1634-04-4	8260B	ND		6.7	0.53	ug/kg	1
4-Methyl-2-pentanone	108-10-1	8260B	ND		13	2.0	ug/kg	1
Methylcyclohexane	108-87-2	8260B	ND		6.7	0.82	ug/kg	1
Methylene chloride	75-09-2	8260B	ND		6.7	3.5	ug/kg	1
Styrene	100-42-5	8260B	ND		6.7	1.5	ug/kg	1
1,1,2,2-Tetrachloroethane	79-34-5	8260B	ND		6.7	0.63	ug/kg	1
Tetrachloroethene	127-18-4	8260B	11		6.7	3.1	ug/kg	1
Toluene	108-88-3	8260B	ND		6.7	2.3	ug/kg	1
1,1,2-Trichloro-1,2,2-Trifluoroethane	76-13-1	8260B	ND		6.7	2.8	ug/kg	1
1,2,4-Trichlorobenzene	120-82-1	8260B	ND		6.7	2.3	ug/kg	1
1,1,1-Trichloroethane	71-55-6	8260B	ND		6.7	1.1	ug/kg	1
1,1,2-Trichloroethane	79-00-5	8260B	ND		6.7	1.1	ug/kg	1

PQL = Practical quantitation limit
B = Detected in the method blank
E = Quantitation of compound exceeded the calibration range
ND = Not detected at or above the MDL
J = Estimated result < PQL and ≥ MDL
P = The RPD between two GC columns exceeds 40%
Where applicable, all soil sample analysis are reported on a dry weight basis unless flagged with a "W"
N = Recovery is out of criteria
H = Out of holding time

Volatile Organic Compounds by GC/MS

Client: ARCADIS U.S., Inc.
Laboratory ID: LD09018-031
Description: F39SED04 (040810)
Matrix: Solid
Date Sampled: 04/08/2010 1515
% Solids: 79.1 04/11/2010 1236
Date Received: 04/10/2010

Run	Prep Method	Analytical Method	Dilution	Analysis Date	Analyst	Prep Date	Batch	Sample Wt.(g)
1	5035	8260B	1	04/17/2010 1756	DLB		31760	4.73

Parameter	CAS Number	Analytical Method	Result	Q	PQL	MDL	Units	Run
Trichloroethene	79-01-6	8260B	19		6.7	2.5	ug/kg	1
Trichlorofluoromethane	75-69-4	8260B	ND		6.7	2.0	ug/kg	1
Vinyl chloride	75-01-4	8260B	ND		6.7	1.1	ug/kg	1
Xylenes (total)	1330-20-7	8260B	ND		6.7	3.9	ug/kg	1

Surrogate	Q	Run 1 % Recovery	Acceptance Limits
1,2-Dichloroethane-d4		84	53-142
Bromofluorobenzene		89	47-138
Toluene-d8		92	68-124

PQL = Practical quantitation limit
B = Detected in the method blank
E = Quantitation of compound exceeded the calibration range
ND = Not detected at or above the MDL
J = Estimated result < PQL and ≥ MDL
P = The RPD between two GC columns exceeds 40%
Where applicable, all soil sample analysis are reported on a dry weight basis unless flagged with a "W"
N = Recovery is out of criteria
H = Out of holding time

Semivolatile Organic Compounds by GC/MS

Client: ARCADIS U.S., Inc.
Laboratory ID: LD09018-031
Description: F39SED04 (040810)
Matrix: Solid
Date Sampled: 04/08/2010 1515
% Solids: 79.1 04/11/2010 1236
Date Received: 04/10/2010

Run	Prep Method	Analytical Method	Dilution	Analysis Date	Analyst	Prep Date	Batch
1	3550C	8270D	1	04/15/2010 1321	JGH	04/13/2010 0000	31355

Parameter	CAS Number	Analytical Method	Result	Q	PQL	MDL	Units	Run
Acenaphthene	83-32-9	8270D	ND		84	13	ug/kg	1
Acenaphthylene	208-96-8	8270D	ND		84	13	ug/kg	1
Acetophenone	98-86-2	8270D	ND		84	22	ug/kg	1
Anthracene	120-12-7	8270D	ND		84	9.2	ug/kg	1
Atrazine	1912-24-9	8270D	ND		84	21	ug/kg	1
Benzaldehyde	100-52-7	8270D	ND		84	21	ug/kg	1
Benzo(a)anthracene	56-55-3	8270D	ND		84	11	ug/kg	1
Benzo(a)pyrene	50-32-8	8270D	ND		84	12	ug/kg	1
Benzo(b)fluoranthene	205-99-2	8270D	ND		84	12	ug/kg	1
Benzo(g,h,i)perylene	191-24-2	8270D	ND		84	14	ug/kg	1
Benzo(k)fluoranthene	207-08-9	8270D	ND		84	12	ug/kg	1
1,1'-Biphenyl	92-52-4	8270D	ND		84	12	ug/kg	1
4-Bromophenyl phenyl ether	101-55-3	8270D	ND		84	12	ug/kg	1
Butyl benzyl phthalate	85-68-7	8270D	ND		160	55	ug/kg	1
Caprolactam	105-60-2	8270D	ND		84	21	ug/kg	1
Carbazole	86-74-8	8270D	ND		84	18	ug/kg	1
4-Chloro-3-methyl phenol	59-50-7	8270D	ND		84	11	ug/kg	1
4-Chloroaniline	106-47-8	8270D	ND		84	8.4	ug/kg	1
bis(2-Chloroethoxy)methane	111-91-1	8270D	ND		84	13	ug/kg	1
bis(2-Chloroethyl)ether	111-44-4	8270D	ND		84	11	ug/kg	1
bis(2-Chloroisopropyl)ether	108-60-1	8270D	ND		84	14	ug/kg	1
2-Chloronaphthalene	91-58-7	8270D	ND		84	14	ug/kg	1
2-Chlorophenol	95-57-8	8270D	ND		84	11	ug/kg	1
4-Chlorophenyl phenyl ether	7005-72-3	8270D	ND		84	14	ug/kg	1
Chrysene	218-01-9	8270D	ND		84	14	ug/kg	1
Dibenzo(a,h)anthracene	53-70-3	8270D	ND		84	11	ug/kg	1
Dibenzofuran	132-64-9	8270D	ND		84	13	ug/kg	1
3,3'-Dichlorobenzidine	91-94-1	8270D	ND		410	45	ug/kg	1
2,4-Dichlorophenol	120-83-2	8270D	ND		84	13	ug/kg	1
Diethylphthalate	84-66-2	8270D	ND		84	27	ug/kg	1
Dimethyl phthalate	131-11-3	8270D	ND		84	27	ug/kg	1
2,4-Dimethylphenol	105-67-9	8270D	ND		84	16	ug/kg	1
Di-n-butyl phthalate	84-74-2	8270D	ND		84	27	ug/kg	1
4,6-Dinitro-2-methylphenol	534-52-1	8270D	ND		410	160	ug/kg	1
2,4-Dinitrophenol	51-28-5	8270D	ND		410	140	ug/kg	1
2,4-Dinitrotoluene	121-14-2	8270D	ND		160	23	ug/kg	1
2,6-Dinitrotoluene	606-20-2	8270D	ND		160	22	ug/kg	1
Di-n-octylphthalate	117-84-0	8270D	ND		84	40	ug/kg	1
bis(2-Ethylhexyl)phthalate	117-81-7	8270D	ND		84	27	ug/kg	1
Fluoranthene	206-44-0	8270D	ND		84	13	ug/kg	1
Fluorene	86-73-7	8270D	ND		84	11	ug/kg	1
Hexachlorobenzene	118-74-1	8270D	ND		84	18	ug/kg	1
Hexachlorobutadiene	87-68-3	8270D	ND		84	14	ug/kg	1
Hexachlorocyclopentadiene	77-47-4	8270D	ND		410	31	ug/kg	1

PQL = Practical quantitation limit
B = Detected in the method blank
E = Quantitation of compound exceeded the calibration range
ND = Not detected at or above the MDL
J = Estimated result < PQL and ≥ MDL
P = The RPD between two GC columns exceeds 40%
Where applicable, all soil sample analysis are reported on a dry weight basis unless flagged with a "W"
N = Recovery is out of criteria
H = Out of holding time

Semivolatile Organic Compounds by GC/MS

Client: ARCADIS U.S., Inc.
Laboratory ID: LD09018-031
Description: F39SED04 (040810)
Matrix: Solid
Date Sampled: 04/08/2010 1515
% Solids: 79.1 04/11/2010 1236
Date Received: 04/10/2010

Run	Prep Method	Analytical Method	Dilution	Analysis Date	Analyst	Prep Date	Batch
1	3550C	8270D	1	04/15/2010 1321	JGH	04/13/2010 0000	31355

Parameter	CAS Number	Analytical Method	Result	Q	PQL	MDL	Units	Run
Hexachloroethane	67-72-1	8270D	ND		84	11	ug/kg	1
Indeno(1,2,3-c,d)pyrene	193-39-5	8270D	ND		84	12	ug/kg	1
Isophorone	78-59-1	8270D	ND		84	9.2	ug/kg	1
2-Methylnaphthalene	91-57-6	8270D	ND		84	12	ug/kg	1
2-Methylphenol	95-48-7	8270D	ND		84	7.5	ug/kg	1
3 & 4-Methylphenol	106-44-5	8270D	ND		160	15	ug/kg	1
Naphthalene	91-20-3	8270D	ND		84	13	ug/kg	1
2-Nitroaniline	88-74-4	8270D	ND		160	28	ug/kg	1
3-Nitroaniline	99-09-2	8270D	ND		160	48	ug/kg	1
4-Nitroaniline	100-01-6	8270D	ND		160	24	ug/kg	1
Nitrobenzene	98-95-3	8270D	ND		84	6.7	ug/kg	1
2-Nitrophenol	88-75-5	8270D	ND		160	23	ug/kg	1
4-Nitrophenol	100-02-7	8270D	ND		410	120	ug/kg	1
N-Nitrosodi-n-propylamine	621-64-7	8270D	ND		84	16	ug/kg	1
N-Nitrosodiphenylamine (Diphenylamine)	86-30-6	8270D	ND		84	10	ug/kg	1
Pentachlorophenol	87-86-5	8270D	ND		410	170	ug/kg	1
Phenanthrene	85-01-8	8270D	ND		84	11	ug/kg	1
Phenol	108-95-2	8270D	ND		84	11	ug/kg	1
Pyrene	129-00-0	8270D	ND		84	16	ug/kg	1
2,4,5-Trichlorophenol	95-95-4	8270D	ND		84	12	ug/kg	1
2,4,6-Trichlorophenol	88-06-2	8270D	ND		84	12	ug/kg	1

Surrogate	Q	Run 1 % Recovery	Acceptance Limits
2-Fluorobiphenyl		65	33-102
2-Fluorophenol		57	28-104
Nitrobenzene-d5		58	22-109
Phenol-d5		55	27-103
Terphenyl-d14		72	41-120
2,4,6-Tribromophenol		92	30-117

PQL = Practical quantitation limit
B = Detected in the method blank
E = Quantitation of compound exceeded the calibration range
ND = Not detected at or above the MDL
J = Estimated result < PQL and ≥ MDL
P = The RPD between two GC columns exceeds 40%
Where applicable, all soil sample analysis are reported on a dry weight basis unless flagged with a "W"
N = Recovery is out of criteria
H = Out of holding time

RCRA Metals

Client: ARCADIS U.S., Inc.	Laboratory ID: LD09018-031
Description: F39SED04 (040810)	Matrix: Solid
Date Sampled: 04/08/2010 1515	% Solids: 79.1 04/11/2010 1236
Date Received: 04/10/2010	

Run	Prep Method	Analytical Method	Dilution	Analysis Date	Analyst	Prep Date	Batch
1	3050B	6010C	1	04/14/2010 0310	CDF	04/12/2010 1945	31320
1		7471B	1	04/14/2010 2016	BNW	04/14/2010 1900	31322
2	3050B	6010C	1	04/14/2010 1817	KJC	04/12/2010 1945	31320

Parameter	CAS Number	Analytical Method	Result	Q	PQL	MDL	Units	Run
Arsenic	7440-38-2	6010C	0.50	J	0.59	0.22	mg/kg	1
Barium	7440-39-3	6010C	7.5		1.5	0.11	mg/kg	1
Cadmium	7440-43-9	6010C	0.053	BJ	0.12	0.012	mg/kg	1
Chromium	7440-47-3	6010C	1.4	B	0.30	0.060	mg/kg	1
Lead	7439-92-1	6010C	1.9		0.59	0.11	mg/kg	1
Mercury	7439-97-6	7471B	ND		0.095	0.0067	mg/kg	1
Selenium	7782-49-2	6010C	0.26	BJ	0.59	0.21	mg/kg	1
Silver	7440-22-4	6010C	ND		0.30	0.050	mg/kg	2

PQL = Practical quantitation limit
ND = Not detected at or above the MDL
Where applicable, all soil sample analysis are reported on a dry weight basis unless flagged with a "W"
B = Detected in the method blank
J = Estimated result < PQL and ≥ MDL
E = Quantitation of compound exceeded the calibration range
P = The RPD between two GC columns exceeds 40%
N = Recovery is out of criteria
H = Out of holding time

Volatile Organic Compounds by GC/MS

Client: ARCADIS U.S., Inc.	Laboratory ID: LD09018-032
Description: F39SED05 (040810)	Matrix: Solid
Date Sampled: 04/08/2010 1615	% Solids: 80.5 04/11/2010 1236
Date Received: 04/10/2010	

Run	Prep Method	Analytical Method	Dilution	Analysis Date	Analyst	Prep Date	Batch	Sample Wt.(g)
1	5035	8260B	1	04/17/2010 1819	DLB		31760	4.29

Parameter	CAS Number	Analytical Method	Result	Q	PQL	MDL	Units	Run
Acetone	67-64-1	8260B	86		29	9.7	ug/kg	1
Benzene	71-43-2	8260B	ND		7.2	1.6	ug/kg	1
Bromodichloromethane	75-27-4	8260B	ND		7.2	2.5	ug/kg	1
Bromoform	75-25-2	8260B	ND		7.2	1.0	ug/kg	1
Bromomethane (Methyl bromide)	74-83-9	8260B	ND		7.2	2.6	ug/kg	1
2-Butanone (MEK)	78-93-3	8260B	ND		14	3.5	ug/kg	1
Carbon disulfide	75-15-0	8260B	ND		7.2	1.9	ug/kg	1
Carbon tetrachloride	56-23-5	8260B	ND		7.2	2.6	ug/kg	1
Chlorobenzene	108-90-7	8260B	ND		7.2	2.5	ug/kg	1
Chloroethane	75-00-3	8260B	ND		7.2	1.9	ug/kg	1
Chloroform	67-66-3	8260B	ND		7.2	1.2	ug/kg	1
Chloromethane (Methyl chloride)	74-87-3	8260B	ND		7.2	1.4	ug/kg	1
Cyclohexane	110-82-7	8260B	ND		7.2	0.98	ug/kg	1
1,2-Dibromo-3-chloropropane (DBCP)	96-12-8	8260B	ND		7.2	2.2	ug/kg	1
Dibromochloromethane	124-48-1	8260B	ND		7.2	2.5	ug/kg	1
1,2-Dibromoethane (EDB)	106-93-4	8260B	ND		7.2	1.2	ug/kg	1
1,2-Dichlorobenzene	95-50-1	8260B	ND		7.2	2.5	ug/kg	1
1,3-Dichlorobenzene	541-73-1	8260B	ND		7.2	2.5	ug/kg	1
1,4-Dichlorobenzene	106-46-7	8260B	ND		7.2	2.5	ug/kg	1
Dichlorodifluoromethane	75-71-8	8260B	ND		7.2	2.3	ug/kg	1
1,1-Dichloroethane	75-34-3	8260B	ND		7.2	1.1	ug/kg	1
1,2-Dichloroethane	107-06-2	8260B	ND		7.2	1.4	ug/kg	1
1,1-Dichloroethene	75-35-4	8260B	ND		7.2	2.5	ug/kg	1
cis-1,2-Dichloroethene	156-59-2	8260B	3.0	J	7.2	1.1	ug/kg	1
trans-1,2-Dichloroethene	156-60-5	8260B	ND		7.2	2.2	ug/kg	1
1,2-Dichloropropane	78-87-5	8260B	ND		7.2	1.3	ug/kg	1
cis-1,3-Dichloropropene	10061-01-5	8260B	ND		7.2	0.98	ug/kg	1
trans-1,3-Dichloropropene	10061-02-6	8260B	ND		7.2	1.2	ug/kg	1
Ethylbenzene	100-41-4	8260B	ND		7.2	2.5	ug/kg	1
2-Hexanone	591-78-6	8260B	ND		14	1.9	ug/kg	1
Isopropylbenzene	98-82-8	8260B	ND		7.2	1.2	ug/kg	1
Methyl acetate	79-20-9	8260B	ND		7.2	0.97	ug/kg	1
Methyl tertiary butyl ether (MTBE)	1634-04-4	8260B	ND		7.2	0.58	ug/kg	1
4-Methyl-2-pentanone	108-10-1	8260B	ND		14	2.2	ug/kg	1
Methylcyclohexane	108-87-2	8260B	ND		7.2	0.88	ug/kg	1
Methylene chloride	75-09-2	8260B	ND		7.2	3.8	ug/kg	1
Styrene	100-42-5	8260B	ND		7.2	1.6	ug/kg	1
1,1,2,2-Tetrachloroethane	79-34-5	8260B	ND		7.2	0.68	ug/kg	1
Tetrachloroethene	127-18-4	8260B	19		7.2	3.3	ug/kg	1
Toluene	108-88-3	8260B	ND		7.2	2.5	ug/kg	1
1,1,2-Trichloro-1,2,2-Trifluoroethane	76-13-1	8260B	ND		7.2	3.0	ug/kg	1
1,2,4-Trichlorobenzene	120-82-1	8260B	ND		7.2	2.5	ug/kg	1
1,1,1-Trichloroethane	71-55-6	8260B	ND		7.2	1.2	ug/kg	1
1,1,2-Trichloroethane	79-00-5	8260B	ND		7.2	1.1	ug/kg	1

PQL = Practical quantitation limit
ND = Not detected at or above the MDL
B = Detected in the method blank
J = Estimated result < PQL and ≥ MDL
E = Quantitation of compound exceeded the calibration range
P = The RPD between two GC columns exceeds 40%
Where applicable, all soil sample analysis are reported on a dry weight basis unless flagged with a "W"
N = Recovery is out of criteria
H = Out of holding time

Volatile Organic Compounds by GC/MS

Client: ARCADIS U.S., Inc.
Laboratory ID: LD09018-032
Description: F39SED05 (040810)
Matrix: Solid
Date Sampled: 04/08/2010 1615
% Solids: 80.5 04/11/2010 1236
Date Received: 04/10/2010

Run	Prep Method	Analytical Method	Dilution	Analysis Date	Analyst	Prep Date	Batch	Sample Wt.(g)
1	5035	8260B	1	04/17/2010 1819	DLB		31760	4.29

Parameter	CAS Number	Analytical Method	Result	Q	PQL	MDL	Units	Run
Trichloroethene	79-01-6	8260B	38		7.2	2.8	ug/kg	1
Trichlorofluoromethane	75-69-4	8260B	ND		7.2	2.2	ug/kg	1
Vinyl chloride	75-01-4	8260B	ND		7.2	1.2	ug/kg	1
Xylenes (total)	1330-20-7	8260B	ND		7.2	4.2	ug/kg	1

Surrogate	Q	Run 1 % Recovery	Acceptance Limits
1,2-Dichloroethane-d4		85	53-142
Bromofluorobenzene		90	47-138
Toluene-d8		91	68-124

PQL = Practical quantitation limit
B = Detected in the method blank
E = Quantitation of compound exceeded the calibration range
ND = Not detected at or above the MDL
J = Estimated result < PQL and ≥ MDL
P = The RPD between two GC columns exceeds 40%
Where applicable, all soil sample analysis are reported on a dry weight basis unless flagged with a "W"
N = Recovery is out of criteria
H = Out of holding time

Semivolatile Organic Compounds by GC/MS

Client: ARCADIS U.S., Inc.
Laboratory ID: LD09018-032
Description: F39SED05 (040810)
Matrix: Solid
Date Sampled: 04/08/2010 1615
% Solids: 80.5 04/11/2010 1236
Date Received: 04/10/2010

Run	Prep Method	Analytical Method	Dilution	Analysis Date	Analyst	Prep Date	Batch
1	3550C	8270D	1	04/15/2010 1340	JGH	04/13/2010 0000	31355

Parameter	CAS Number	Analytical Method	Result	Q	PQL	MDL	Units	Run
Acenaphthene	83-32-9	8270D	ND		83	13	ug/kg	1
Acenaphthylene	208-96-8	8270D	ND		83	13	ug/kg	1
Acetophenone	98-86-2	8270D	ND		83	22	ug/kg	1
Anthracene	120-12-7	8270D	ND		83	9.1	ug/kg	1
Atrazine	1912-24-9	8270D	ND		83	21	ug/kg	1
Benzaldehyde	100-52-7	8270D	ND		83	21	ug/kg	1
Benzo(a)anthracene	56-55-3	8270D	ND		83	11	ug/kg	1
Benzo(a)pyrene	50-32-8	8270D	ND		83	11	ug/kg	1
Benzo(b)fluoranthene	205-99-2	8270D	ND		83	12	ug/kg	1
Benzo(g,h,i)perylene	191-24-2	8270D	ND		83	14	ug/kg	1
Benzo(k)fluoranthene	207-08-9	8270D	ND		83	12	ug/kg	1
1,1'-Biphenyl	92-52-4	8270D	ND		83	12	ug/kg	1
4-Bromophenyl phenyl ether	101-55-3	8270D	ND		83	12	ug/kg	1
Butyl benzyl phthalate	85-68-7	8270D	ND		160	54	ug/kg	1
Caprolactam	105-60-2	8270D	ND		83	21	ug/kg	1
Carbazole	86-74-8	8270D	ND		83	18	ug/kg	1
4-Chloro-3-methyl phenol	59-50-7	8270D	ND		83	10	ug/kg	1
4-Chloroaniline	106-47-8	8270D	ND		83	8.4	ug/kg	1
bis(2-Chloroethoxy)methane	111-91-1	8270D	ND		83	12	ug/kg	1
bis(2-Chloroethyl)ether	111-44-4	8270D	ND		83	11	ug/kg	1
bis(2-Chloroisopropyl)ether	108-60-1	8270D	ND		83	14	ug/kg	1
2-Chloronaphthalene	91-58-7	8270D	ND		83	14	ug/kg	1
2-Chlorophenol	95-57-8	8270D	ND		83	11	ug/kg	1
4-Chlorophenyl phenyl ether	7005-72-3	8270D	ND		83	14	ug/kg	1
Chrysene	218-01-9	8270D	ND		83	14	ug/kg	1
Dibenzo(a,h)anthracene	53-70-3	8270D	ND		83	11	ug/kg	1
Dibenzofuran	132-64-9	8270D	ND		83	13	ug/kg	1
3,3'-Dichlorobenzidine	91-94-1	8270D	ND		410	45	ug/kg	1
2,4-Dichlorophenol	120-83-2	8270D	ND		83	13	ug/kg	1
Diethylphthalate	84-66-2	8270D	ND		83	27	ug/kg	1
Dimethyl phthalate	131-11-3	8270D	ND		83	27	ug/kg	1
2,4-Dimethylphenol	105-67-9	8270D	ND		83	15	ug/kg	1
Di-n-butyl phthalate	84-74-2	8270D	ND		83	27	ug/kg	1
4,6-Dinitro-2-methylphenol	534-52-1	8270D	ND		410	160	ug/kg	1
2,4-Dinitrophenol	51-28-5	8270D	ND		410	140	ug/kg	1
2,4-Dinitrotoluene	121-14-2	8270D	ND		160	22	ug/kg	1
2,6-Dinitrotoluene	606-20-2	8270D	ND		160	21	ug/kg	1
Di-n-octylphthalate	117-84-0	8270D	ND		83	39	ug/kg	1
bis(2-Ethylhexyl)phthalate	117-81-7	8270D	ND		83	27	ug/kg	1
Fluoranthene	206-44-0	8270D	ND		83	13	ug/kg	1
Fluorene	86-73-7	8270D	ND		83	11	ug/kg	1
Hexachlorobenzene	118-74-1	8270D	ND		83	18	ug/kg	1
Hexachlorobutadiene	87-68-3	8270D	ND		83	13	ug/kg	1
Hexachlorocyclopentadiene	77-47-4	8270D	ND		410	30	ug/kg	1

PQL = Practical quantitation limit
B = Detected in the method blank
E = Quantitation of compound exceeded the calibration range
ND = Not detected at or above the MDL
J = Estimated result < PQL and ≥ MDL
P = The RPD between two GC columns exceeds 40%
Where applicable, all soil sample analysis are reported on a dry weight basis unless flagged with a "W"
N = Recovery is out of criteria
H = Out of holding time

Semivolatile Organic Compounds by GC/MS

Client: ARCADIS U.S., Inc.
Laboratory ID: LD09018-032
Description: F39SED05 (040810)
Matrix: Solid
Date Sampled: 04/08/2010 1615
% Solids: 80.5 04/11/2010 1236
Date Received: 04/10/2010

Run	Prep Method	Analytical Method	Dilution	Analysis Date	Analyst	Prep Date	Batch
1	3550C	8270D	1	04/15/2010 1340	JGH	04/13/2010 0000	31355

Parameter	CAS Number	Analytical Method	Result	Q	PQL	MDL	Units	Run
Hexachloroethane	67-72-1	8270D	ND		83	11	ug/kg	1
Indeno(1,2,3-c,d)pyrene	193-39-5	8270D	ND		83	12	ug/kg	1
Isophorone	78-59-1	8270D	ND		83	9.1	ug/kg	1
2-Methylnaphthalene	91-57-6	8270D	ND		83	12	ug/kg	1
2-Methylphenol	95-48-7	8270D	ND		83	7.4	ug/kg	1
3 & 4-Methylphenol	106-44-5	8270D	ND		160	15	ug/kg	1
Naphthalene	91-20-3	8270D	ND		83	13	ug/kg	1
2-Nitroaniline	88-74-4	8270D	ND		160	28	ug/kg	1
3-Nitroaniline	99-09-2	8270D	ND		160	48	ug/kg	1
4-Nitroaniline	100-01-6	8270D	ND		160	23	ug/kg	1
Nitrobenzene	98-95-3	8270D	ND		83	6.6	ug/kg	1
2-Nitrophenol	88-75-5	8270D	ND		160	23	ug/kg	1
4-Nitrophenol	100-02-7	8270D	ND		410	120	ug/kg	1
N-Nitrosodi-n-propylamine	621-64-7	8270D	ND		83	16	ug/kg	1
N-Nitrosodiphenylamine (Diphenylamine)	86-30-6	8270D	ND		83	10	ug/kg	1
Pentachlorophenol	87-86-5	8270D	ND		410	170	ug/kg	1
Phenanthrene	85-01-8	8270D	ND		83	11	ug/kg	1
Phenol	108-95-2	8270D	ND		83	11	ug/kg	1
Pyrene	129-00-0	8270D	ND		83	16	ug/kg	1
2,4,5-Trichlorophenol	95-95-4	8270D	ND		83	12	ug/kg	1
2,4,6-Trichlorophenol	88-06-2	8270D	ND		83	12	ug/kg	1

Surrogate	Q	Run 1 % Recovery	Acceptance Limits
2-Fluorobiphenyl		64	33-102
2-Fluorophenol		64	28-104
Nitrobenzene-d5		66	22-109
Phenol-d5		61	27-103
Terphenyl-d14		76	41-120
2,4,6-Tribromophenol		96	30-117

PQL = Practical quantitation limit
B = Detected in the method blank
E = Quantitation of compound exceeded the calibration range
ND = Not detected at or above the MDL
J = Estimated result < PQL and ≥ MDL
P = The RPD between two GC columns exceeds 40%
Where applicable, all soil sample analysis are reported on a dry weight basis unless flagged with a "W"
N = Recovery is out of criteria
H = Out of holding time

RCRA Metals

Client: ARCADIS U.S., Inc.	Laboratory ID: LD09018-032
Description: F39SED05 (040810)	Matrix: Solid
Date Sampled: 04/08/2010 1615	% Solids: 80.5 04/11/2010 1236
Date Received: 04/10/2010	

Run	Prep Method	Analytical Method	Dilution	Analysis Date	Analyst	Prep Date	Batch
1	3050B	6010C	1	04/14/2010 0314	CDF	04/12/2010 1945	31320
1		7471B	1	04/14/2010 2018	BNW	04/14/2010 1900	31322
2	3050B	6010C	1	04/14/2010 1823	KJC	04/12/2010 1945	31320

Parameter	CAS Number	Analytical Method	Result	Q	PQL	MDL	Units	Run
Arsenic	7440-38-2	6010C	0.81		0.62	0.23	mg/kg	1
Barium	7440-39-3	6010C	0.80	J	1.6	0.11	mg/kg	1
Cadmium	7440-43-9	6010C	0.033	BJ	0.12	0.013	mg/kg	1
Chromium	7440-47-3	6010C	1.3	B	0.31	0.063	mg/kg	1
Lead	7439-92-1	6010C	0.64		0.62	0.11	mg/kg	1
Mercury	7439-97-6	7471B	ND		0.098	0.0070	mg/kg	1
Selenium	7782-49-2	6010C	0.21	BJ	0.62	0.21	mg/kg	1
Silver	7440-22-4	6010C	ND		0.31	0.052	mg/kg	2

PQL = Practical quantitation limit
B = Detected in the method blank
E = Quantitation of compound exceeded the calibration range
ND = Not detected at or above the MDL
J = Estimated result < PQL and ≥ MDL
P = The RPD between two GC columns exceeds 40%
Where applicable, all soil sample analysis are reported on a dry weight basis unless flagged with a "W"
N = Recovery is out of criteria
H = Out of holding time

Volatile Organic Compounds by GC/MS

Client: ARCADIS U.S., Inc.
Laboratory ID: LD09018-033
Description: F39SED06 (040810)
Matrix: Solid
Date Sampled: 04/08/2010 1645
% Solids: 73.9 04/11/2010 1236
Date Received: 04/10/2010

Run	Prep Method	Analytical Method	Dilution	Analysis Date	Analyst	Prep Date	Batch	Sample Wt.(g)
2	5035	8260B	1	04/20/2010 0343	DLB		31830	6.37

Parameter	CAS Number	Analytical Method	Result	Q	PQL	MDL	Units	Run
Acetone	67-64-1	8260B	35		21	7.1	ug/kg	2
Benzene	71-43-2	8260B	ND		5.3	1.2	ug/kg	2
Bromodichloromethane	75-27-4	8260B	ND		5.3	1.8	ug/kg	2
Bromoform	75-25-2	8260B	ND		5.3	0.74	ug/kg	2
Bromomethane (Methyl bromide)	74-83-9	8260B	ND		5.3	1.9	ug/kg	2
2-Butanone (MEK)	78-93-3	8260B	ND		11	2.5	ug/kg	2
Carbon disulfide	75-15-0	8260B	ND		5.3	1.4	ug/kg	2
Carbon tetrachloride	56-23-5	8260B	ND		5.3	1.9	ug/kg	2
Chlorobenzene	108-90-7	8260B	ND		5.3	1.8	ug/kg	2
Chloroethane	75-00-3	8260B	ND		5.3	1.4	ug/kg	2
Chloroform	67-66-3	8260B	ND		5.3	0.88	ug/kg	2
Chloromethane (Methyl chloride)	74-87-3	8260B	ND		5.3	1.1	ug/kg	2
Cyclohexane	110-82-7	8260B	ND		5.3	0.72	ug/kg	2
1,2-Dibromo-3-chloropropane (DBCP)	96-12-8	8260B	ND		5.3	1.6	ug/kg	2
Dibromochloromethane	124-48-1	8260B	ND		5.3	1.8	ug/kg	2
1,2-Dibromoethane (EDB)	106-93-4	8260B	ND		5.3	0.90	ug/kg	2
1,2-Dichlorobenzene	95-50-1	8260B	ND		5.3	1.8	ug/kg	2
1,3-Dichlorobenzene	541-73-1	8260B	ND		5.3	1.8	ug/kg	2
1,4-Dichlorobenzene	106-46-7	8260B	ND		5.3	1.8	ug/kg	2
Dichlorodifluoromethane	75-71-8	8260B	ND		5.3	1.7	ug/kg	2
1,1-Dichloroethane	75-34-3	8260B	ND		5.3	0.78	ug/kg	2
1,2-Dichloroethane	107-06-2	8260B	ND		5.3	1.1	ug/kg	2
1,1-Dichloroethene	75-35-4	8260B	ND		5.3	1.8	ug/kg	2
cis-1,2-Dichloroethene	156-59-2	8260B	2.0	J	5.3	0.81	ug/kg	2
trans-1,2-Dichloroethene	156-60-5	8260B	ND		5.3	1.6	ug/kg	2
1,2-Dichloropropane	78-87-5	8260B	ND		5.3	0.97	ug/kg	2
cis-1,3-Dichloropropene	10061-01-5	8260B	ND		5.3	0.72	ug/kg	2
trans-1,3-Dichloropropene	10061-02-6	8260B	ND		5.3	0.87	ug/kg	2
Ethylbenzene	100-41-4	8260B	ND		5.3	1.8	ug/kg	2
2-Hexanone	591-78-6	8260B	ND		11	1.4	ug/kg	2
Isopropylbenzene	98-82-8	8260B	ND		5.3	0.85	ug/kg	2
Methyl acetate	79-20-9	8260B	ND		5.3	0.71	ug/kg	2
Methyl tertiary butyl ether (MTBE)	1634-04-4	8260B	ND		5.3	0.42	ug/kg	2
4-Methyl-2-pentanone	108-10-1	8260B	ND		11	1.6	ug/kg	2
Methylcyclohexane	108-87-2	8260B	ND		5.3	0.65	ug/kg	2
Methylene chloride	75-09-2	8260B	ND		5.3	2.8	ug/kg	2
Styrene	100-42-5	8260B	ND		5.3	1.2	ug/kg	2
1,1,2,2-Tetrachloroethane	79-34-5	8260B	ND		5.3	0.50	ug/kg	2
Tetrachloroethene	127-18-4	8260B	ND		5.3	2.4	ug/kg	2
Toluene	108-88-3	8260B	ND		5.3	1.8	ug/kg	2
1,1,2-Trichloro-1,2,2-Trifluoroethane	76-13-1	8260B	ND		5.3	2.2	ug/kg	2
1,2,4-Trichlorobenzene	120-82-1	8260B	ND		5.3	1.8	ug/kg	2
1,1,1-Trichloroethane	71-55-6	8260B	ND		5.3	0.90	ug/kg	2
1,1,2-Trichloroethane	79-00-5	8260B	ND		5.3	0.84	ug/kg	2

PQL = Practical quantitation limit
B = Detected in the method blank
E = Quantitation of compound exceeded the calibration range
ND = Not detected at or above the MDL
J = Estimated result < PQL and ≥ MDL
P = The RPD between two GC columns exceeds 40%
Where applicable, all soil sample analysis are reported on a dry weight basis unless flagged with a "W"
N = Recovery is out of criteria
H = Out of holding time

Volatile Organic Compounds by GC/MS

Client: ARCADIS U.S., Inc.
Laboratory ID: LD09018-033
Description: F39SED06 (040810)
Matrix: Solid
Date Sampled: 04/08/2010 1645
% Solids: 73.9 04/11/2010 1236
Date Received: 04/10/2010

Run	Prep Method	Analytical Method	Dilution	Analysis Date	Analyst	Prep Date	Batch	Sample Wt.(g)
2	5035	8260B	1	04/20/2010 0343	DLB		31830	6.37

Parameter	CAS Number	Analytical Method	Result	Q	PQL	MDL	Units	Run
Trichloroethene	79-01-6	8260B	17		5.3	2.0	ug/kg	2
Trichlorofluoromethane	75-69-4	8260B	ND		5.3	1.6	ug/kg	2
Vinyl chloride	75-01-4	8260B	ND		5.3	0.91	ug/kg	2
Xylenes (total)	1330-20-7	8260B	ND		5.3	3.1	ug/kg	2

Surrogate	Q	Run 2 % Recovery	Acceptance Limits
1,2-Dichloroethane-d4		86	53-142
Bromofluorobenzene		92	47-138
Toluene-d8		85	68-124

PQL = Practical quantitation limit
B = Detected in the method blank
E = Quantitation of compound exceeded the calibration range
ND = Not detected at or above the MDL
J = Estimated result < PQL and ≥ MDL
P = The RPD between two GC columns exceeds 40%
Where applicable, all soil sample analysis are reported on a dry weight basis unless flagged with a "W"
N = Recovery is out of criteria
H = Out of holding time

Semivolatile Organic Compounds by GC/MS

Client: ARCADIS U.S., Inc.
Laboratory ID: LD09018-033
Description: F39SED06 (040810)
Matrix: Solid
Date Sampled: 04/08/2010 1645
% Solids: 73.9 04/11/2010 1236
Date Received: 04/10/2010

Run	Prep Method	Analytical Method	Dilution	Analysis Date	Analyst	Prep Date	Batch
1	3550C	8270D	1	04/15/2010 1400	JGH	04/13/2010 0000	31355

Parameter	CAS Number	Analytical Method	Result	Q	PQL	MDL	Units	Run
Acenaphthene	83-32-9	8270D	ND		89	14	ug/kg	1
Acenaphthylene	208-96-8	8270D	ND		89	14	ug/kg	1
Acetophenone	98-86-2	8270D	ND		89	24	ug/kg	1
Anthracene	120-12-7	8270D	ND		89	9.9	ug/kg	1
Atrazine	1912-24-9	8270D	ND		89	23	ug/kg	1
Benzaldehyde	100-52-7	8270D	ND		89	23	ug/kg	1
Benzo(a)anthracene	56-55-3	8270D	ND		89	12	ug/kg	1
Benzo(a)pyrene	50-32-8	8270D	ND		89	12	ug/kg	1
Benzo(b)fluoranthene	205-99-2	8270D	ND		89	13	ug/kg	1
Benzo(g,h,i)perylene	191-24-2	8270D	ND		89	15	ug/kg	1
Benzo(k)fluoranthene	207-08-9	8270D	ND		89	13	ug/kg	1
1,1'-Biphenyl	92-52-4	8270D	ND		89	13	ug/kg	1
4-Bromophenyl phenyl ether	101-55-3	8270D	ND		89	13	ug/kg	1
Butyl benzyl phthalate	85-68-7	8270D	ND		170	59	ug/kg	1
Caprolactam	105-60-2	8270D	ND		89	23	ug/kg	1
Carbazole	86-74-8	8270D	ND		89	19	ug/kg	1
4-Chloro-3-methyl phenol	59-50-7	8270D	ND		89	11	ug/kg	1
4-Chloroaniline	106-47-8	8270D	ND		89	9.0	ug/kg	1
bis(2-Chloroethoxy)methane	111-91-1	8270D	ND		89	14	ug/kg	1
bis(2-Chloroethyl)ether	111-44-4	8270D	ND		89	12	ug/kg	1
bis(2-Chloroisopropyl)ether	108-60-1	8270D	ND		89	15	ug/kg	1
2-Chloronaphthalene	91-58-7	8270D	ND		89	15	ug/kg	1
2-Chlorophenol	95-57-8	8270D	ND		89	12	ug/kg	1
4-Chlorophenyl phenyl ether	7005-72-3	8270D	ND		89	15	ug/kg	1
Chrysene	218-01-9	8270D	ND		89	15	ug/kg	1
Dibenzo(a,h)anthracene	53-70-3	8270D	ND		89	12	ug/kg	1
Dibenzofuran	132-64-9	8270D	ND		89	14	ug/kg	1
3,3'-Dichlorobenzidine	91-94-1	8270D	ND		440	48	ug/kg	1
2,4-Dichlorophenol	120-83-2	8270D	ND		89	14	ug/kg	1
Diethylphthalate	84-66-2	8270D	ND		89	29	ug/kg	1
Dimethyl phthalate	131-11-3	8270D	ND		89	29	ug/kg	1
2,4-Dimethylphenol	105-67-9	8270D	ND		89	17	ug/kg	1
Di-n-butyl phthalate	84-74-2	8270D	ND		89	29	ug/kg	1
4,6-Dinitro-2-methylphenol	534-52-1	8270D	ND		440	170	ug/kg	1
2,4-Dinitrophenol	51-28-5	8270D	ND		440	150	ug/kg	1
2,4-Dinitrotoluene	121-14-2	8270D	ND		170	24	ug/kg	1
2,6-Dinitrotoluene	606-20-2	8270D	ND		170	23	ug/kg	1
Di-n-octylphthalate	117-84-0	8270D	ND		89	43	ug/kg	1
bis(2-Ethylhexyl)phthalate	117-81-7	8270D	ND		89	29	ug/kg	1
Fluoranthene	206-44-0	8270D	ND		89	14	ug/kg	1
Fluorene	86-73-7	8270D	ND		89	12	ug/kg	1
Hexachlorobenzene	118-74-1	8270D	ND		89	20	ug/kg	1
Hexachlorobutadiene	87-68-3	8270D	ND		89	15	ug/kg	1
Hexachlorocyclopentadiene	77-47-4	8270D	ND		440	33	ug/kg	1

PQL = Practical quantitation limit
B = Detected in the method blank
E = Quantitation of compound exceeded the calibration range
ND = Not detected at or above the MDL
J = Estimated result < PQL and ≥ MDL
P = The RPD between two GC columns exceeds 40%
Where applicable, all soil sample analysis are reported on a dry weight basis unless flagged with a "W"
N = Recovery is out of criteria
H = Out of holding time

Semivolatile Organic Compounds by GC/MS

Client: ARCADIS U.S., Inc.
Laboratory ID: LD09018-033
Description: F39SED06 (040810)
Matrix: Solid
Date Sampled: 04/08/2010 1645
% Solids: 73.9 04/11/2010 1236
Date Received: 04/10/2010

Run	Prep Method	Analytical Method	Dilution	Analysis Date	Analyst	Prep Date	Batch
1	3550C	8270D	1	04/15/2010 1400	JGH	04/13/2010 0000	31355

Parameter	CAS Number	Analytical Method	Result	Q	PQL	MDL	Units	Run
Hexachloroethane	67-72-1	8270D	ND		89	12	ug/kg	1
Indeno(1,2,3-c,d)pyrene	193-39-5	8270D	ND		89	13	ug/kg	1
Isophorone	78-59-1	8270D	ND		89	9.8	ug/kg	1
2-Methylnaphthalene	91-57-6	8270D	ND		89	13	ug/kg	1
2-Methylphenol	95-48-7	8270D	ND		89	8.1	ug/kg	1
3 & 4-Methylphenol	106-44-5	8270D	ND		170	16	ug/kg	1
Naphthalene	91-20-3	8270D	ND		89	14	ug/kg	1
2-Nitroaniline	88-74-4	8270D	ND		170	30	ug/kg	1
3-Nitroaniline	99-09-2	8270D	ND		170	52	ug/kg	1
4-Nitroaniline	100-01-6	8270D	ND		170	25	ug/kg	1
Nitrobenzene	98-95-3	8270D	ND		89	7.2	ug/kg	1
2-Nitrophenol	88-75-5	8270D	ND		170	25	ug/kg	1
4-Nitrophenol	100-02-7	8270D	ND		440	130	ug/kg	1
N-Nitrosodi-n-propylamine	621-64-7	8270D	ND		89	17	ug/kg	1
N-Nitrosodiphenylamine (Diphenylamine)	86-30-6	8270D	ND		89	11	ug/kg	1
Pentachlorophenol	87-86-5	8270D	ND		440	180	ug/kg	1
Phenanthrene	85-01-8	8270D	ND		89	12	ug/kg	1
Phenol	108-95-2	8270D	ND		89	12	ug/kg	1
Pyrene	129-00-0	8270D	ND		89	18	ug/kg	1
2,4,5-Trichlorophenol	95-95-4	8270D	ND		89	12	ug/kg	1
2,4,6-Trichlorophenol	88-06-2	8270D	ND		89	13	ug/kg	1

Surrogate	Q	Run 1 % Recovery	Acceptance Limits
2-Fluorobiphenyl		66	33-102
2-Fluorophenol		56	28-104
Nitrobenzene-d5		57	22-109
Phenol-d5		54	27-103
Terphenyl-d14		77	41-120
2,4,6-Tribromophenol		103	30-117

PQL = Practical quantitation limit
B = Detected in the method blank
E = Quantitation of compound exceeded the calibration range
ND = Not detected at or above the MDL
J = Estimated result < PQL and ≥ MDL
P = The RPD between two GC columns exceeds 40%
Where applicable, all soil sample analysis are reported on a dry weight basis unless flagged with a "W"
N = Recovery is out of criteria
H = Out of holding time

RCRA Metals

Client: ARCADIS U.S., Inc.	Laboratory ID: LD09018-033
Description: F39SED06 (040810)	Matrix: Solid
Date Sampled: 04/08/2010 1645	% Solids: 73.9 04/11/2010 1236
Date Received: 04/10/2010	

Run	Prep Method	Analytical Method	Dilution	Analysis Date	Analyst	Prep Date	Batch
1	3050B	6010C	1	04/14/2010 0319	CDF	04/12/2010 1945	31320
1		7471B	1	04/14/2010 2019	BNW	04/14/2010 1900	31322
2	3050B	6010C	1	04/14/2010 1829	KJC	04/12/2010 1945	31320

Parameter	CAS Number	Analytical Method	Result	Q	PQL	MDL	Units	Run
Arsenic	7440-38-2	6010C	3.7		0.68	0.25	mg/kg	1
Barium	7440-39-3	6010C	1.6	J	1.8	0.12	mg/kg	1
Cadmium	7440-43-9	6010C	0.11	BJ	0.14	0.014	mg/kg	1
Chromium	7440-47-3	6010C	1.3	B	0.34	0.069	mg/kg	1
Lead	7439-92-1	6010C	1.5		0.68	0.13	mg/kg	1
Mercury	7439-97-6	7471B	ND		0.11	0.0079	mg/kg	1
Selenium	7782-49-2	6010C	0.33	BJ	0.68	0.24	mg/kg	1
Silver	7440-22-4	6010C	ND		0.34	0.057	mg/kg	2

PQL = Practical quantitation limit
ND = Not detected at or above the MDL
Where applicable, all soil sample analysis are reported on a dry weight basis unless flagged with a "W"
B = Detected in the method blank
J = Estimated result < PQL and ≥ MDL
E = Quantitation of compound exceeded the calibration range
P = The RPD between two GC columns exceeds 40%
N = Recovery is out of criteria
H = Out of holding time

Volatile Organic Compounds by GC/MS

Client: ARCADIS U.S., Inc.
Laboratory ID: LD09018-034
Description: F39SED07 (040810)
Matrix: Solid
Date Sampled: 04/08/2010 1715
% Solids: 78.7 04/11/2010 1236
Date Received: 04/10/2010

Run	Prep Method	Analytical Method	Dilution	Analysis Date	Analyst	Prep Date	Batch	Sample Wt.(g)
1	5035	8260B	1	04/17/2010 1905	DLB		31760	6.66

Parameter	CAS Number	Analytical Method	Result	Q	PQL	MDL	Units	Run
Acetone	67-64-1	8260B	130		19	6.4	ug/kg	1
Benzene	71-43-2	8260B	ND		4.8	1.0	ug/kg	1
Bromodichloromethane	75-27-4	8260B	ND		4.8	1.6	ug/kg	1
Bromoform	75-25-2	8260B	ND		4.8	0.67	ug/kg	1
Bromomethane (Methyl bromide)	74-83-9	8260B	ND		4.8	1.7	ug/kg	1
2-Butanone (MEK)	78-93-3	8260B	ND		9.5	2.3	ug/kg	1
Carbon disulfide	75-15-0	8260B	ND		4.8	1.2	ug/kg	1
Carbon tetrachloride	56-23-5	8260B	ND		4.8	1.7	ug/kg	1
Chlorobenzene	108-90-7	8260B	ND		4.8	1.6	ug/kg	1
Chloroethane	75-00-3	8260B	ND		4.8	1.2	ug/kg	1
Chloroform	67-66-3	8260B	ND		4.8	0.79	ug/kg	1
Chloromethane (Methyl chloride)	74-87-3	8260B	ND		4.8	0.95	ug/kg	1
Cyclohexane	110-82-7	8260B	ND		4.8	0.64	ug/kg	1
1,2-Dibromo-3-chloropropane (DBCP)	96-12-8	8260B	ND		4.8	1.4	ug/kg	1
Dibromochloromethane	124-48-1	8260B	ND		4.8	1.6	ug/kg	1
1,2-Dibromoethane (EDB)	106-93-4	8260B	ND		4.8	0.81	ug/kg	1
1,2-Dichlorobenzene	95-50-1	8260B	ND		4.8	1.6	ug/kg	1
1,3-Dichlorobenzene	541-73-1	8260B	ND		4.8	1.6	ug/kg	1
1,4-Dichlorobenzene	106-46-7	8260B	ND		4.8	1.6	ug/kg	1
Dichlorodifluoromethane	75-71-8	8260B	ND		4.8	1.5	ug/kg	1
1,1-Dichloroethane	75-34-3	8260B	ND		4.8	0.70	ug/kg	1
1,2-Dichloroethane	107-06-2	8260B	ND		4.8	0.95	ug/kg	1
1,1-Dichloroethene	75-35-4	8260B	ND		4.8	1.6	ug/kg	1
cis-1,2-Dichloroethene	156-59-2	8260B	1.5	J	4.8	0.72	ug/kg	1
trans-1,2-Dichloroethene	156-60-5	8260B	ND		4.8	1.4	ug/kg	1
1,2-Dichloropropane	78-87-5	8260B	ND		4.8	0.87	ug/kg	1
cis-1,3-Dichloropropene	10061-01-5	8260B	ND		4.8	0.65	ug/kg	1
trans-1,3-Dichloropropene	10061-02-6	8260B	ND		4.8	0.78	ug/kg	1
Ethylbenzene	100-41-4	8260B	ND		4.8	1.6	ug/kg	1
2-Hexanone	591-78-6	8260B	ND		9.5	1.2	ug/kg	1
Isopropylbenzene	98-82-8	8260B	ND		4.8	0.76	ug/kg	1
Methyl acetate	79-20-9	8260B	ND		4.8	0.64	ug/kg	1
Methyl tertiary butyl ether (MTBE)	1634-04-4	8260B	ND		4.8	0.38	ug/kg	1
4-Methyl-2-pentanone	108-10-1	8260B	ND		9.5	1.4	ug/kg	1
Methylcyclohexane	108-87-2	8260B	ND		4.8	0.58	ug/kg	1
Methylene chloride	75-09-2	8260B	ND		4.8	2.5	ug/kg	1
Styrene	100-42-5	8260B	ND		4.8	1.0	ug/kg	1
1,1,2,2-Tetrachloroethane	79-34-5	8260B	ND		4.8	0.45	ug/kg	1
Tetrachloroethene	127-18-4	8260B	ND		4.8	2.2	ug/kg	1
Toluene	108-88-3	8260B	ND		4.8	1.6	ug/kg	1
1,1,2-Trichloro-1,2,2-Trifluoroethane	76-13-1	8260B	ND		4.8	2.0	ug/kg	1
1,2,4-Trichlorobenzene	120-82-1	8260B	ND		4.8	1.6	ug/kg	1
1,1,1-Trichloroethane	71-55-6	8260B	ND		4.8	0.81	ug/kg	1
1,1,2-Trichloroethane	79-00-5	8260B	ND		4.8	0.75	ug/kg	1

PQL = Practical quantitation limit
B = Detected in the method blank
E = Quantitation of compound exceeded the calibration range
ND = Not detected at or above the MDL
J = Estimated result < PQL and ≥ MDL
P = The RPD between two GC columns exceeds 40%
Where applicable, all soil sample analysis are reported on a dry weight basis unless flagged with a "W"
N = Recovery is out of criteria
H = Out of holding time

Volatile Organic Compounds by GC/MS

Client: ARCADIS U.S., Inc.
Laboratory ID: LD09018-034
Description: F39SED07 (040810)
Matrix: Solid
Date Sampled: 04/08/2010 1715
% Solids: 78.7 04/11/2010 1236
Date Received: 04/10/2010

Run	Prep Method	Analytical Method	Dilution	Analysis Date	Analyst	Prep Date	Batch	Sample Wt.(g)
1	5035	8260B	1	04/17/2010 1905	DLB		31760	6.66

Parameter	CAS Number	Analytical Method	Result	Q	PQL	MDL	Units	Run
Trichloroethene	79-01-6	8260B	12		4.8	1.8	ug/kg	1
Trichlorofluoromethane	75-69-4	8260B	ND		4.8	1.4	ug/kg	1
Vinyl chloride	75-01-4	8260B	ND		4.8	0.82	ug/kg	1
Xylenes (total)	1330-20-7	8260B	ND		4.8	2.8	ug/kg	1

Surrogate	Q	Run 1 % Recovery	Acceptance Limits
1,2-Dichloroethane-d4		93	53-142
Bromofluorobenzene		94	47-138
Toluene-d8		97	68-124

PQL = Practical quantitation limit
B = Detected in the method blank
E = Quantitation of compound exceeded the calibration range
ND = Not detected at or above the MDL
J = Estimated result < PQL and ≥ MDL
P = The RPD between two GC columns exceeds 40%
Where applicable, all soil sample analysis are reported on a dry weight basis unless flagged with a "W"
N = Recovery is out of criteria
H = Out of holding time

Semivolatile Organic Compounds by GC/MS

Client: ARCADIS U.S., Inc.
Laboratory ID: LD09018-034
Description: F39SED07 (040810)
Matrix: Solid
Date Sampled: 04/08/2010 1715
% Solids: 78.7 04/11/2010 1236
Date Received: 04/10/2010

Run	Prep Method	Analytical Method	Dilution	Analysis Date	Analyst	Prep Date	Batch
1	3550C	8270D	1	04/15/2010 1419	JGH	04/13/2010 0000	31355

Parameter	CAS Number	Analytical Method	Result	Q	PQL	MDL	Units	Run
Acenaphthene	83-32-9	8270D	ND		85	14	ug/kg	1
Acenaphthylene	208-96-8	8270D	ND		85	13	ug/kg	1
Acetophenone	98-86-2	8270D	ND		85	23	ug/kg	1
Anthracene	120-12-7	8270D	ND		85	9.3	ug/kg	1
Atrazine	1912-24-9	8270D	ND		85	22	ug/kg	1
Benzaldehyde	100-52-7	8270D	ND		85	22	ug/kg	1
Benzo(a)anthracene	56-55-3	8270D	ND		85	11	ug/kg	1
Benzo(a)pyrene	50-32-8	8270D	ND		85	12	ug/kg	1
Benzo(b)fluoranthene	205-99-2	8270D	ND		85	12	ug/kg	1
Benzo(g,h,i)perylene	191-24-2	8270D	ND		85	15	ug/kg	1
Benzo(k)fluoranthene	207-08-9	8270D	ND		85	12	ug/kg	1
1,1'-Biphenyl	92-52-4	8270D	ND		85	13	ug/kg	1
4-Bromophenyl phenyl ether	101-55-3	8270D	ND		85	12	ug/kg	1
Butyl benzyl phthalate	85-68-7	8270D	ND		160	56	ug/kg	1
Caprolactam	105-60-2	8270D	ND		85	22	ug/kg	1
Carbazole	86-74-8	8270D	ND		85	18	ug/kg	1
4-Chloro-3-methyl phenol	59-50-7	8270D	ND		85	11	ug/kg	1
4-Chloroaniline	106-47-8	8270D	ND		85	8.6	ug/kg	1
bis(2-Chloroethoxy)methane	111-91-1	8270D	ND		85	13	ug/kg	1
bis(2-Chloroethyl)ether	111-44-4	8270D	ND		85	12	ug/kg	1
bis(2-Chloroisopropyl)ether	108-60-1	8270D	ND		85	14	ug/kg	1
2-Chloronaphthalene	91-58-7	8270D	ND		85	14	ug/kg	1
2-Chlorophenol	95-57-8	8270D	ND		85	12	ug/kg	1
4-Chlorophenyl phenyl ether	7005-72-3	8270D	ND		85	14	ug/kg	1
Chrysene	218-01-9	8270D	ND		85	14	ug/kg	1
Dibenzo(a,h)anthracene	53-70-3	8270D	ND		85	11	ug/kg	1
Dibenzofuran	132-64-9	8270D	ND		85	13	ug/kg	1
3,3'-Dichlorobenzidine	91-94-1	8270D	ND		420	46	ug/kg	1
2,4-Dichlorophenol	120-83-2	8270D	ND		85	13	ug/kg	1
Diethylphthalate	84-66-2	8270D	ND		85	28	ug/kg	1
Dimethyl phthalate	131-11-3	8270D	ND		85	28	ug/kg	1
2,4-Dimethylphenol	105-67-9	8270D	ND		85	16	ug/kg	1
Di-n-butyl phthalate	84-74-2	8270D	ND		85	28	ug/kg	1
4,6-Dinitro-2-methylphenol	534-52-1	8270D	ND		420	160	ug/kg	1
2,4-Dinitrophenol	51-28-5	8270D	ND		420	140	ug/kg	1
2,4-Dinitrotoluene	121-14-2	8270D	ND		160	23	ug/kg	1
2,6-Dinitrotoluene	606-20-2	8270D	ND		160	22	ug/kg	1
Di-n-octylphthalate	117-84-0	8270D	ND		85	41	ug/kg	1
bis(2-Ethylhexyl)phthalate	117-81-7	8270D	ND		85	28	ug/kg	1
Fluoranthene	206-44-0	8270D	ND		85	13	ug/kg	1
Fluorene	86-73-7	8270D	ND		85	11	ug/kg	1
Hexachlorobenzene	118-74-1	8270D	ND		85	19	ug/kg	1
Hexachlorobutadiene	87-68-3	8270D	ND		85	14	ug/kg	1
Hexachlorocyclopentadiene	77-47-4	8270D	ND		420	31	ug/kg	1

PQL = Practical quantitation limit
B = Detected in the method blank
E = Quantitation of compound exceeded the calibration range
ND = Not detected at or above the MDL
J = Estimated result < PQL and ≥ MDL
P = The RPD between two GC columns exceeds 40%
Where applicable, all soil sample analysis are reported on a dry weight basis unless flagged with a "W"
N = Recovery is out of criteria
H = Out of holding time

Semivolatile Organic Compounds by GC/MS

Client: ARCADIS U.S., Inc.
Laboratory ID: LD09018-034
Description: F39SED07 (040810)
Matrix: Solid
Date Sampled: 04/08/2010 1715
% Solids: 78.7 04/11/2010 1236
Date Received: 04/10/2010

Run	Prep Method	Analytical Method	Dilution	Analysis Date	Analyst	Prep Date	Batch
1	3550C	8270D	1	04/15/2010 1419	JGH	04/13/2010 0000	31355

Parameter	CAS Number	Analytical Method	Result	Q	PQL	MDL	Units	Run
Hexachloroethane	67-72-1	8270D	ND		85	11	ug/kg	1
Indeno(1,2,3-c,d)pyrene	193-39-5	8270D	ND		85	12	ug/kg	1
Isophorone	78-59-1	8270D	ND		85	9.3	ug/kg	1
2-Methylnaphthalene	91-57-6	8270D	ND		85	13	ug/kg	1
2-Methylphenol	95-48-7	8270D	ND		85	7.6	ug/kg	1
3 & 4-Methylphenol	106-44-5	8270D	ND		160	15	ug/kg	1
Naphthalene	91-20-3	8270D	ND		85	13	ug/kg	1
2-Nitroaniline	88-74-4	8270D	ND		160	29	ug/kg	1
3-Nitroaniline	99-09-2	8270D	ND		160	49	ug/kg	1
4-Nitroaniline	100-01-6	8270D	ND		160	24	ug/kg	1
Nitrobenzene	98-95-3	8270D	ND		85	6.8	ug/kg	1
2-Nitrophenol	88-75-5	8270D	ND		160	23	ug/kg	1
4-Nitrophenol	100-02-7	8270D	ND		420	120	ug/kg	1
N-Nitrosodi-n-propylamine	621-64-7	8270D	ND		85	16	ug/kg	1
N-Nitrosodiphenylamine (Diphenylamine)	86-30-6	8270D	ND		85	10	ug/kg	1
Pentachlorophenol	87-86-5	8270D	ND		420	170	ug/kg	1
Phenanthrene	85-01-8	8270D	ND		85	11	ug/kg	1
Phenol	108-95-2	8270D	ND		85	11	ug/kg	1
Pyrene	129-00-0	8270D	ND		85	17	ug/kg	1
2,4,5-Trichlorophenol	95-95-4	8270D	ND		85	12	ug/kg	1
2,4,6-Trichlorophenol	88-06-2	8270D	ND		85	12	ug/kg	1

Surrogate	Q	Run 1 % Recovery	Acceptance Limits
2-Fluorobiphenyl		65	33-102
2-Fluorophenol		64	28-104
Nitrobenzene-d5		66	22-109
Phenol-d5		60	27-103
Terphenyl-d14		73	41-120
2,4,6-Tribromophenol		88	30-117

PQL = Practical quantitation limit
B = Detected in the method blank
E = Quantitation of compound exceeded the calibration range
ND = Not detected at or above the MDL
J = Estimated result < PQL and ≥ MDL
P = The RPD between two GC columns exceeds 40%
Where applicable, all soil sample analysis are reported on a dry weight basis unless flagged with a "W"
N = Recovery is out of criteria
H = Out of holding time

RCRA Metals

Client: ARCADIS U.S., Inc.	Laboratory ID: LD09018-034
Description: F39SED07 (040810)	Matrix: Solid
Date Sampled: 04/08/2010 1715	% Solids: 78.7 04/11/2010 1236
Date Received: 04/10/2010	

Run	Prep Method	Analytical Method	Dilution	Analysis Date	Analyst	Prep Date	Batch
1	3050B	6010C	1	04/14/2010 0324	CDF	04/12/2010 1945	31320
1		7471B	1	04/14/2010 2022	BNW	04/14/2010 1900	31322
2	3050B	6010C	1	04/14/2010 1834	KJC	04/12/2010 1945	31320

Parameter	CAS Number	Analytical Method	Result	Q	PQL	MDL	Units	Run
Arsenic	7440-38-2	6010C	2.9		0.60	0.23	mg/kg	1
Barium	7440-39-3	6010C	0.90	J	1.6	0.11	mg/kg	1
Cadmium	7440-43-9	6010C	0.087	BJ	0.12	0.013	mg/kg	1
Chromium	7440-47-3	6010C	0.85	B	0.30	0.061	mg/kg	1
Lead	7439-92-1	6010C	1.5		0.60	0.11	mg/kg	1
Mercury	7439-97-6	7471B	ND		0.10	0.0073	mg/kg	1
Selenium	7782-49-2	6010C	ND		0.60	0.21	mg/kg	1
Silver	7440-22-4	6010C	ND		0.30	0.050	mg/kg	2

PQL = Practical quantitation limit
ND = Not detected at or above the MDL
B = Detected in the method blank
J = Estimated result < PQL and ≥ MDL
E = Quantitation of compound exceeded the calibration range
P = The RPD between two GC columns exceeds 40%
Where applicable, all soil sample analysis are reported on a dry weight basis unless flagged with a "W"
N = Recovery is out of criteria
H = Out of holding time

Volatile Organic Compounds by GC/MS

Client: ARCADIS U.S., Inc.
Laboratory ID: LD09018-035
Description: F39SED08 (040810)
Matrix: Solid
Date Sampled: 04/08/2010 1745
% Solids: 61.3 04/11/2010 1236
Date Received: 04/10/2010

Run	Prep Method	Analytical Method	Dilution	Analysis Date	Analyst	Prep Date	Batch	Sample Wt.(g)
1	5035	8260B	1	04/17/2010 1928	DLB		31760	8.22

Parameter	CAS Number	Analytical Method	Result	Q	PQL	MDL	Units	Run
Acetone	67-64-1	8260B	94		20	6.6	ug/kg	1
Benzene	71-43-2	8260B	ND		5.0	1.1	ug/kg	1
Bromodichloromethane	75-27-4	8260B	ND		5.0	1.7	ug/kg	1
Bromoform	75-25-2	8260B	ND		5.0	0.69	ug/kg	1
Bromomethane (Methyl bromide)	74-83-9	8260B	ND		5.0	1.8	ug/kg	1
2-Butanone (MEK)	78-93-3	8260B	ND		9.9	2.4	ug/kg	1
Carbon disulfide	75-15-0	8260B	ND		5.0	1.3	ug/kg	1
Carbon tetrachloride	56-23-5	8260B	ND		5.0	1.8	ug/kg	1
Chlorobenzene	108-90-7	8260B	ND		5.0	1.7	ug/kg	1
Chloroethane	75-00-3	8260B	ND		5.0	1.3	ug/kg	1
Chloroform	67-66-3	8260B	ND		5.0	0.82	ug/kg	1
Chloromethane (Methyl chloride)	74-87-3	8260B	ND		5.0	0.99	ug/kg	1
Cyclohexane	110-82-7	8260B	ND		5.0	0.67	ug/kg	1
1,2-Dibromo-3-chloropropane (DBCP)	96-12-8	8260B	ND		5.0	1.5	ug/kg	1
Dibromochloromethane	124-48-1	8260B	ND		5.0	1.7	ug/kg	1
1,2-Dibromoethane (EDB)	106-93-4	8260B	ND		5.0	0.84	ug/kg	1
1,2-Dichlorobenzene	95-50-1	8260B	ND		5.0	1.7	ug/kg	1
1,3-Dichlorobenzene	541-73-1	8260B	ND		5.0	1.7	ug/kg	1
1,4-Dichlorobenzene	106-46-7	8260B	ND		5.0	1.7	ug/kg	1
Dichlorodifluoromethane	75-71-8	8260B	ND		5.0	1.6	ug/kg	1
1,1-Dichloroethane	75-34-3	8260B	ND		5.0	0.72	ug/kg	1
1,2-Dichloroethane	107-06-2	8260B	ND		5.0	0.99	ug/kg	1
1,1-Dichloroethene	75-35-4	8260B	ND		5.0	1.7	ug/kg	1
cis-1,2-Dichloroethene	156-59-2	8260B	ND		5.0	0.75	ug/kg	1
trans-1,2-Dichloroethene	156-60-5	8260B	ND		5.0	1.5	ug/kg	1
1,2-Dichloropropane	78-87-5	8260B	ND		5.0	0.90	ug/kg	1
cis-1,3-Dichloropropene	10061-01-5	8260B	ND		5.0	0.67	ug/kg	1
trans-1,3-Dichloropropene	10061-02-6	8260B	ND		5.0	0.81	ug/kg	1
Ethylbenzene	100-41-4	8260B	ND		5.0	1.7	ug/kg	1
2-Hexanone	591-78-6	8260B	ND		9.9	1.3	ug/kg	1
Isopropylbenzene	98-82-8	8260B	ND		5.0	0.79	ug/kg	1
Methyl acetate	79-20-9	8260B	ND		5.0	0.66	ug/kg	1
Methyl tertiary butyl ether (MTBE)	1634-04-4	8260B	ND		5.0	0.40	ug/kg	1
4-Methyl-2-pentanone	108-10-1	8260B	ND		9.9	1.5	ug/kg	1
Methylcyclohexane	108-87-2	8260B	ND		5.0	0.60	ug/kg	1
Methylene chloride	75-09-2	8260B	ND		5.0	2.6	ug/kg	1
Styrene	100-42-5	8260B	ND		5.0	1.1	ug/kg	1
1,1,2,2-Tetrachloroethane	79-34-5	8260B	ND		5.0	0.47	ug/kg	1
Tetrachloroethene	127-18-4	8260B	ND		5.0	2.3	ug/kg	1
Toluene	108-88-3	8260B	ND		5.0	1.7	ug/kg	1
1,1,2-Trichloro-1,2,2-Trifluoroethane	76-13-1	8260B	ND		5.0	2.1	ug/kg	1
1,2,4-Trichlorobenzene	120-82-1	8260B	ND		5.0	1.7	ug/kg	1
1,1,1-Trichloroethane	71-55-6	8260B	ND		5.0	0.84	ug/kg	1
1,1,2-Trichloroethane	79-00-5	8260B	ND		5.0	0.78	ug/kg	1

PQL = Practical quantitation limit
B = Detected in the method blank
E = Quantitation of compound exceeded the calibration range
ND = Not detected at or above the MDL
J = Estimated result < PQL and ≥ MDL
P = The RPD between two GC columns exceeds 40%
Where applicable, all soil sample analysis are reported on a dry weight basis unless flagged with a "W"
N = Recovery is out of criteria
H = Out of holding time

Volatile Organic Compounds by GC/MS

Client: ARCADIS U.S., Inc.	Laboratory ID: LD09018-035
Description: F39SED08 (040810)	Matrix: Solid
Date Sampled: 04/08/2010 1745	% Solids: 61.3 04/11/2010 1236
Date Received: 04/10/2010	

Run	Prep Method	Analytical Method	Dilution	Analysis Date	Analyst	Prep Date	Batch	Sample Wt.(g)
1	5035	8260B	1	04/17/2010 1928	DLB		31760	8.22

Parameter	CAS Number	Analytical Method	Result	Q	PQL	MDL	Units	Run
Trichloroethene	79-01-6	8260B	ND		5.0	1.9	ug/kg	1
Trichlorofluoromethane	75-69-4	8260B	ND		5.0	1.5	ug/kg	1
Vinyl chloride	75-01-4	8260B	ND		5.0	0.85	ug/kg	1
Xylenes (total)	1330-20-7	8260B	ND		5.0	2.9	ug/kg	1

Surrogate	Q	Run 1 % Recovery	Acceptance Limits
1,2-Dichloroethane-d4		90	53-142
Bromofluorobenzene		74	47-138
Toluene-d8		88	68-124

PQL = Practical quantitation limit
ND = Not detected at or above the MDL
Where applicable, all soil sample analysis are reported on a dry weight basis unless flagged with a "W"
B = Detected in the method blank
J = Estimated result < PQL and ≥ MDL
E = Quantitation of compound exceeded the calibration range
P = The RPD between two GC columns exceeds 40%
N = Recovery is out of criteria
H = Out of holding time

Semivolatile Organic Compounds by GC/MS

Client: ARCADIS U.S., Inc.
Laboratory ID: LD09018-035
Description: F39SED08 (040810)
Matrix: Solid
Date Sampled: 04/08/2010 1745
% Solids: 61.3 04/11/2010 1236
Date Received: 04/10/2010

Run	Prep Method	Analytical Method	Dilution	Analysis Date	Analyst	Prep Date	Batch
1	3550C	8270D	1	04/15/2010 1438	JGH	04/13/2010 0000	31355
2	3550C	8270D	1	04/21/2010 2324	JGH	04/13/2010 0000	31355

Parameter	CAS Number	Analytical Method	Result	Q	PQL	MDL	Units	Run
Acenaphthene	83-32-9	8270D	ND		110	17	ug/kg	1
Acenaphthylene	208-96-8	8270D	ND		110	17	ug/kg	1
Acetophenone	98-86-2	8270D	ND		110	29	ug/kg	1
Anthracene	120-12-7	8270D	ND		110	12	ug/kg	1
Atrazine	1912-24-9	8270D	ND		110	27	ug/kg	1
Benzaldehyde	100-52-7	8270D	610		110	27	ug/kg	2
Benzo(a)anthracene	56-55-3	8270D	ND		110	14	ug/kg	1
Benzo(a)pyrene	50-32-8	8270D	ND		110	15	ug/kg	1
Benzo(b)fluoranthene	205-99-2	8270D	140		110	15	ug/kg	1
Benzo(g,h,i)perylene	191-24-2	8270D	ND		110	19	ug/kg	1
Benzo(k)fluoranthene	207-08-9	8270D	ND		110	15	ug/kg	1
1,1'-Biphenyl	92-52-4	8270D	ND		110	16	ug/kg	1
4-Bromophenyl phenyl ether	101-55-3	8270D	ND		110	16	ug/kg	1
Butyl benzyl phthalate	85-68-7	8270D	ND		210	71	ug/kg	1
Caprolactam	105-60-2	8270D	ND		110	27	ug/kg	1
Carbazole	86-74-8	8270D	ND		110	23	ug/kg	1
4-Chloro-3-methyl phenol	59-50-7	8270D	ND		110	14	ug/kg	1
4-Chloroaniline	106-47-8	8270D	ND		110	11	ug/kg	1
bis(2-Chloroethoxy)methane	111-91-1	8270D	ND		110	16	ug/kg	1
bis(2-Chloroethyl)ether	111-44-4	8270D	ND		110	15	ug/kg	1
bis(2-Chloroisopropyl)ether	108-60-1	8270D	ND		110	18	ug/kg	1
2-Chloronaphthalene	91-58-7	8270D	ND		110	18	ug/kg	1
2-Chlorophenol	95-57-8	8270D	ND		110	15	ug/kg	1
4-Chlorophenyl phenyl ether	7005-72-3	8270D	ND		110	18	ug/kg	1
Chrysene	218-01-9	8270D	ND		110	18	ug/kg	1
Dibenzo(a,h)anthracene	53-70-3	8270D	ND		110	15	ug/kg	1
Dibenzofuran	132-64-9	8270D	ND		110	17	ug/kg	1
3,3'-Dichlorobenzidine	91-94-1	8270D	ND		530	58	ug/kg	1
2,4-Dichlorophenol	120-83-2	8270D	ND		110	17	ug/kg	1
Diethylphthalate	84-66-2	8270D	ND		110	35	ug/kg	1
Dimethyl phthalate	131-11-3	8270D	ND		110	35	ug/kg	1
2,4-Dimethylphenol	105-67-9	8270D	ND		110	20	ug/kg	1
Di-n-butyl phthalate	84-74-2	8270D	ND		110	35	ug/kg	1
4,6-Dinitro-2-methylphenol	534-52-1	8270D	ND		530	210	ug/kg	1
2,4-Dinitrophenol	51-28-5	8270D	ND		530	180	ug/kg	1
2,4-Dinitrotoluene	121-14-2	8270D	ND		210	29	ug/kg	1
2,6-Dinitrotoluene	606-20-2	8270D	ND		210	28	ug/kg	1
Di-n-octylphthalate	117-84-0	8270D	ND		110	51	ug/kg	1
bis(2-Ethylhexyl)phthalate	117-81-7	8270D	ND		110	35	ug/kg	1
Fluoranthene	206-44-0	8270D	ND		110	17	ug/kg	1
Fluorene	86-73-7	8270D	ND		110	14	ug/kg	1
Hexachlorobenzene	118-74-1	8270D	ND		110	24	ug/kg	1
Hexachlorobutadiene	87-68-3	8270D	ND		110	18	ug/kg	1

PQL = Practical quantitation limit
B = Detected in the method blank
E = Quantitation of compound exceeded the calibration range
ND = Not detected at or above the MDL
J = Estimated result < PQL and ≥ MDL
P = The RPD between two GC columns exceeds 40%
Where applicable, all soil sample analysis are reported on a dry weight basis unless flagged with a "W"
N = Recovery is out of criteria
H = Out of holding time

Semivolatile Organic Compounds by GC/MS

Client: ARCADIS U.S., Inc.
Laboratory ID: LD09018-035
Description: F39SED08 (040810)
Matrix: Solid
Date Sampled: 04/08/2010 1745
% Solids: 61.3 04/11/2010 1236
Date Received: 04/10/2010

Run	Prep Method	Analytical Method	Dilution	Analysis Date	Analyst	Prep Date	Batch
1	3550C	8270D	1	04/15/2010 1438	JGH	04/13/2010 0000	31355
2	3550C	8270D	1	04/21/2010 2324	JGH	04/13/2010 0000	31355

Parameter	CAS Number	Analytical Method	Result	Q	PQL	MDL	Units	Run
Hexachlorocyclopentadiene	77-47-4	8270D	ND		530	39	ug/kg	1
Hexachloroethane	67-72-1	8270D	ND		110	14	ug/kg	1
Indeno(1,2,3-c,d)pyrene	193-39-5	8270D	ND		110	16	ug/kg	1
Isophorone	78-59-1	8270D	ND		110	12	ug/kg	1
2-Methylnaphthalene	91-57-6	8270D	140		110	16	ug/kg	1
2-Methylphenol	95-48-7	8270D	ND		110	9.7	ug/kg	1
3 & 4-Methylphenol	106-44-5	8270D	ND		210	19	ug/kg	1
Naphthalene	91-20-3	8270D	ND		110	16	ug/kg	1
2-Nitroaniline	88-74-4	8270D	ND		210	37	ug/kg	1
3-Nitroaniline	99-09-2	8270D	ND		210	62	ug/kg	1
4-Nitroaniline	100-01-6	8270D	ND		210	31	ug/kg	1
Nitrobenzene	98-95-3	8270D	ND		110	8.6	ug/kg	1
2-Nitrophenol	88-75-5	8270D	ND		210	30	ug/kg	1
4-Nitrophenol	100-02-7	8270D	ND		530	150	ug/kg	1
N-Nitrosodi-n-propylamine	621-64-7	8270D	ND		110	21	ug/kg	1
N-Nitrosodiphenylamine (Diphenylamine)	86-30-6	8270D	ND		110	13	ug/kg	1
Pentachlorophenol	87-86-5	8270D	ND		530	220	ug/kg	1
Phenanthrene	85-01-8	8270D	140		110	14	ug/kg	1
Phenol	108-95-2	8270D	ND		110	15	ug/kg	1
Pyrene	129-00-0	8270D	ND		110	21	ug/kg	1
2,4,5-Trichlorophenol	95-95-4	8270D	ND		110	15	ug/kg	1
2,4,6-Trichlorophenol	88-06-2	8270D	ND		110	16	ug/kg	1

Surrogate	Q	Run 1 % Recovery	Acceptance Limits	Q	Run 2 % Recovery	Acceptance Limits
2-Fluorobiphenyl		68	33-102		78	33-102
2-Fluorophenol		60	28-104		70	28-104
Nitrobenzene-d5		62	22-109		70	22-109
Phenol-d5		59	27-103		77	27-103
Terphenyl-d14		68	41-120		72	41-120
2,4,6-Tribromophenol		95	30-117		73	30-117

PQL = Practical quantitation limit
B = Detected in the method blank
E = Quantitation of compound exceeded the calibration range
ND = Not detected at or above the MDL
J = Estimated result < PQL and ≥ MDL
P = The RPD between two GC columns exceeds 40%
Where applicable, all soil sample analysis are reported on a dry weight basis unless flagged with a "W"
N = Recovery is out of criteria
H = Out of holding time

RCRA Metals

Client: ARCADIS U.S., Inc.	Laboratory ID: LD09018-035
Description: F39SED08 (040810)	Matrix: Solid
Date Sampled: 04/08/2010 1745	% Solids: 61.3 04/11/2010 1236
Date Received: 04/10/2010	

Run	Prep Method	Analytical Method	Dilution	Analysis Date	Analyst	Prep Date	Batch
1	3050B	6010C	1	04/14/2010 0329	CDF	04/12/2010 1945	31320
1		7471B	1	04/14/2010 2029	BNW	04/14/2010 1900	31322
2	3050B	6010C	1	04/14/2010 1840	KJC	04/12/2010 1945	31320

Parameter	CAS Number	Analytical Method	Result	Q	PQL	MDL	Units	Run
Arsenic	7440-38-2	6010C	17		0.82	0.31	mg/kg	1
Barium	7440-39-3	6010C	16		2.1	0.15	mg/kg	1
Cadmium	7440-43-9	6010C	0.60	B	0.16	0.017	mg/kg	1
Chromium	7440-47-3	6010C	4.6	B	0.41	0.083	mg/kg	1
Lead	7439-92-1	6010C	5.1		0.82	0.15	mg/kg	1
Mercury	7439-97-6	7471B	0.030	J	0.13	0.0093	mg/kg	1
Selenium	7782-49-2	6010C	1.0	B	0.82	0.28	mg/kg	1
Silver	7440-22-4	6010C	ND		0.41	0.068	mg/kg	2

PQL = Practical quantitation limit
ND = Not detected at or above the MDL
B = Detected in the method blank
J = Estimated result < PQL and ≥ MDL
E = Quantitation of compound exceeded the calibration range
P = The RPD between two GC columns exceeds 40%
N = Recovery is out of criteria
H = Out of holding time
Where applicable, all soil sample analysis are reported on a dry weight basis unless flagged with a "W"

QC Summary

Volatile Organic Compounds by GC/MS - MB

Sample ID: LQ31466-001
Batch: 31466
Analytical Method: 8260B

Matrix: Aqueous
Prep Method: 5030B

Parameter	Result	Q	Dil	PQL	MDL	Units	Analysis Date
Acetone	ND		1	10	0.061	ug/L	04/14/2010 0309
Benzene	ND		1	0.50	0.027	ug/L	04/14/2010 0309
Bromodichloromethane	ND		1	0.50	0.17	ug/L	04/14/2010 0309
Bromoform	ND		1	0.50	0.010	ug/L	04/14/2010 0309
Bromomethane (Methyl bromide)	ND		1	0.50	0.20	ug/L	04/14/2010 0309
2-Butanone (MEK)	ND		1	10	2.0	ug/L	04/14/2010 0309
Carbon disulfide	ND		1	0.50	0.097	ug/L	04/14/2010 0309
Carbon tetrachloride	ND		1	0.50	0.085	ug/L	04/14/2010 0309
Chlorobenzene	ND		1	0.50	0.17	ug/L	04/14/2010 0309
Chloroethane	ND		1	0.50	0.17	ug/L	04/14/2010 0309
Chloroform	ND		1	0.50	0.17	ug/L	04/14/2010 0309
Chloromethane (Methyl chloride)	ND		1	0.50	0.17	ug/L	04/14/2010 0309
Cyclohexane	ND		1	0.50	0.30	ug/L	04/14/2010 0309
1,2-Dibromo-3-chloropropane (DBCP)	ND		1	0.50	0.069	ug/L	04/14/2010 0309
Dibromochloromethane	ND		1	0.50	0.17	ug/L	04/14/2010 0309
1,2-Dibromoethane (EDB)	ND		1	0.50	0.061	ug/L	04/14/2010 0309
1,4-Dichlorobenzene	ND		1	0.50	0.17	ug/L	04/14/2010 0309
1,2-Dichlorobenzene	ND		1	0.50	0.17	ug/L	04/14/2010 0309
1,3-Dichlorobenzene	ND		1	0.50	0.17	ug/L	04/14/2010 0309
Dichlorodifluoromethane	ND		1	0.50	0.071	ug/L	04/14/2010 0309
1,2-Dichloroethane	ND		1	0.50	0.023	ug/L	04/14/2010 0309
1,1-Dichloroethane	ND		1	0.50	0.054	ug/L	04/14/2010 0309
cis-1,2-Dichloroethene	ND		1	0.50	0.087	ug/L	04/14/2010 0309
1,1-Dichloroethene	ND		1	0.50	0.094	ug/L	04/14/2010 0309
trans-1,2-Dichloroethene	ND		1	0.50	0.079	ug/L	04/14/2010 0309
1,2-Dichloropropane	ND		1	0.50	0.081	ug/L	04/14/2010 0309
cis-1,3-Dichloropropene	ND		1	0.50	0.090	ug/L	04/14/2010 0309
trans-1,3-Dichloropropene	ND		1	0.50	0.18	ug/L	04/14/2010 0309
Ethylbenzene	ND		1	0.50	0.17	ug/L	04/14/2010 0309
2-Hexanone	ND		1	10	0.27	ug/L	04/14/2010 0309
Isopropylbenzene	ND		1	0.50	0.029	ug/L	04/14/2010 0309
Methyl acetate	ND		1	1.0	0.30	ug/L	04/14/2010 0309
Methyl tertiary butyl ether (MTBE)	ND		1	0.50	0.019	ug/L	04/14/2010 0309
4-Methyl-2-pentanone	ND		1	10	0.31	ug/L	04/14/2010 0309
Methylcyclohexane	ND		1	5.0	0.95	ug/L	04/14/2010 0309
Methylene chloride	0.24	J	1	0.50	0.17	ug/L	04/14/2010 0309
Styrene	ND		1	0.50	0.015	ug/L	04/14/2010 0309
1,1,2,2-Tetrachloroethane	ND		1	0.50	0.013	ug/L	04/14/2010 0309
Tetrachloroethene	ND		1	0.50	0.014	ug/L	04/14/2010 0309
Toluene	ND		1	0.50	0.17	ug/L	04/14/2010 0309
1,1,2-Trichloro-1,2,2-Trifluoroethane	ND		1	0.50	0.30	ug/L	04/14/2010 0309
1,2,4-Trichlorobenzene	ND		1	0.50	0.17	ug/L	04/14/2010 0309
1,1,2-Trichloroethane	ND		1	0.50	0.031	ug/L	04/14/2010 0309
1,1,1-Trichloroethane	ND		1	0.50	0.029	ug/L	04/14/2010 0309

PQL = Practical quantitation limit
ND = Not detected at or above the MDL
P = The RPD between two GC columns exceeds 40%
J = Estimated result < PQL and ≥ MDL
N - Recovery is out of criteria
+ - RPD is out of criteria

Where applicable, all soil sample analysis are reported on a dry weight basis unless flagged with a "W"

Note: Calculations are performed before rounding to avoid round-off errors in calculated results

Volatile Organic Compounds by GC/MS - MB

Sample ID: LQ31466-001
Batch: 31466
Analytical Method: 8260B

Matrix: Aqueous
Prep Method: 5030B

Parameter	Result	Q	Dil	PQL	MDL	Units	Analysis Date
Trichloroethene	ND		1	0.50	0.024	ug/L	04/14/2010 0309
Trichlorofluoromethane	ND		1	0.50	0.051	ug/L	04/14/2010 0309
Vinyl chloride	ND		1	0.50	0.065	ug/L	04/14/2010 0309
Xylenes (total)	ND		1	0.50	0.17	ug/L	04/14/2010 0309

Surrogate	Q	% Rec	Acceptance Limit
Bromofluorobenzene		92	70-130
1,2-Dichloroethane-d4		103	70-130
Toluene-d8		106	70-130

PQL = Practical quantitation limit
ND = Not detected at or above the MDL
P = The RPD between two GC columns exceeds 40%
J = Estimated result < PQL and ≥ MDL
N - Recovery is out of criteria
+ - RPD is out of criteria

Where applicable, all soil sample analysis are reported on a dry weight basis unless flagged with a "W"

Note: Calculations are performed before rounding to avoid round-off errors in calculated results

Volatile Organic Compounds by GC/MS - LCS

Sample ID: LQ31466-002
Batch: 31466
Analytical Method: 8260B

Matrix: Aqueous
Prep Method: 5030B

Parameter	Spike Amount (ug/L)	Result (ug/L)	Q	Dil	% Rec	% Rec Limit	Analysis Date
Acetone	100	97		1	97	46-153	04/14/2010 0140
Benzene	50	53		1	106	70-130	04/14/2010 0140
Bromodichloromethane	50	50		1	99	70-130	04/14/2010 0140
Bromoform	50	45		1	90	70-130	04/14/2010 0140
Bromomethane (Methyl bromide)	50	50		1	99	60-140	04/14/2010 0140
2-Butanone (MEK)	100	94		1	94	60-140	04/14/2010 0140
Carbon disulfide	50	61		1	121	60-140	04/14/2010 0140
Carbon tetrachloride	50	56		1	111	70-130	04/14/2010 0140
Chlorobenzene	50	51		1	102	70-130	04/14/2010 0140
Chloroethane	50	49		1	99	42-163	04/14/2010 0140
Chloroform	50	54		1	107	70-130	04/14/2010 0140
Chloromethane (Methyl chloride)	50	41		1	82	20-158	04/14/2010 0140
Cyclohexane	50	54		1	109	70-130	04/14/2010 0140
1,2-Dibromo-3-chloropropane (DBCP)	50	45		1	91	70-130	04/14/2010 0140
Dibromochloromethane	50	47		1	93	70-130	04/14/2010 0140
1,2-Dibromoethane (EDB)	50	49		1	97	70-130	04/14/2010 0140
1,4-Dichlorobenzene	50	52		1	103	70-130	04/14/2010 0140
1,2-Dichlorobenzene	50	52		1	104	70-130	04/14/2010 0140
1,3-Dichlorobenzene	50	52		1	104	70-130	04/14/2010 0140
Dichlorodifluoromethane	50	53		1	106	60-140	04/14/2010 0140
1,2-Dichloroethane	50	52		1	105	70-130	04/14/2010 0140
1,1-Dichloroethane	50	53		1	107	70-130	04/14/2010 0140
cis-1,2-Dichloroethene	50	53		1	106	70-130	04/14/2010 0140
1,1-Dichloroethene	50	53		1	106	70-130	04/14/2010 0140
trans-1,2-Dichloroethene	50	53		1	107	70-130	04/14/2010 0140
1,2-Dichloropropane	50	54		1	107	70-130	04/14/2010 0140
cis-1,3-Dichloropropene	50	49		1	98	70-130	04/14/2010 0140
trans-1,3-Dichloropropene	50	46		1	93	70-130	04/14/2010 0140
Ethylbenzene	50	52		1	105	70-130	04/14/2010 0140
2-Hexanone	100	94		1	94	60-140	04/14/2010 0140
Isopropylbenzene	50	58		1	117	70-130	04/14/2010 0140
Methyl acetate	50	52		1	103	15-128	04/14/2010 0140
Methyl tertiary butyl ether (MTBE)	50	55		1	109	70-130	04/14/2010 0140
4-Methyl-2-pentanone	100	97		1	97	60-140	04/14/2010 0140
Methylcyclohexane	50	54		1	109	70-130	04/14/2010 0140
Methylene chloride	50	50		1	99	70-130	04/14/2010 0140
Styrene	50	47		1	93	70-130	04/14/2010 0140
1,1,2,2-Tetrachloroethane	50	57		1	114	70-130	04/14/2010 0140
Tetrachloroethene	50	49		1	98	70-130	04/14/2010 0140
Toluene	50	54		1	108	70-130	04/14/2010 0140
1,1,2-Trichloro-1,2,2-Trifluoroethane	50	47		1	93	70-130	04/14/2010 0140
1,2,4-Trichlorobenzene	50	54		1	107	70-130	04/14/2010 0140
1,1,2-Trichloroethane	50	50		1	100	70-130	04/14/2010 0140
1,1,1-Trichloroethane	50	56		1	112	70-130	04/14/2010 0140

PQL = Practical quantitation limit
ND = Not detected at or above the MDL
P = The RPD between two GC columns exceeds 40%
J = Estimated result < PQL and ≥ MDL
N - Recovery is out of criteria
+ - RPD is out of criteria

Where applicable, all soil sample analysis are reported on a dry weight basis unless flagged with a "W"

Note: Calculations are performed before rounding to avoid round-off errors in calculated results

Volatile Organic Compounds by GC/MS - LCS

Sample ID: LQ31466-002
Batch: 31466
Analytical Method: 8260B

Matrix: Aqueous
Prep Method: 5030B

Parameter	Spike Amount (ug/L)	Result (ug/L)	Q	Dil	% Rec	% Rec Limit	Analysis Date
Trichloroethene	50	51		1	102	70-130	04/14/2010 0140
Trichlorofluoromethane	50	51		1	102	60-140	04/14/2010 0140
Vinyl chloride	50	49		1	97	60-140	04/14/2010 0140
Xylenes (total)	100	100		1	101	70-130	04/14/2010 0140

Surrogate	Q	% Rec	Acceptance Limit
Bromofluorobenzene		98	70-130
1,2-Dichloroethane-d4		100	70-130
Toluene-d8		107	70-130

PQL = Practical quantitation limit
ND = Not detected at or above the MDL
P = The RPD between two GC columns exceeds 40%
J = Estimated result < PQL and ≥ MDL
N - Recovery is out of criteria
+ - RPD is out of criteria

Where applicable, all soil sample analysis are reported on a dry weight basis unless flagged with a "W"

Note: Calculations are performed before rounding to avoid round-off errors in calculated results

Volatile Organic Compounds by GC/MS - LCSD

Sample ID: LQ31466-003
Batch: 31466
Analytical Method: 8260B

Matrix: Aqueous
Prep Method: 5030B

Parameter	Spike Amount (ug/L)	Result (ug/L)	Q	Dil	% Rec	% RPD	% Rec Limit	% RPD Limit	Analysis Date
Acetone	100	93		1	93	4.0	46-153	20	04/14/2010 0202
Benzene	50	54		1	107	1.3	70-130	20	04/14/2010 0202
Bromodichloromethane	50	50		1	99	0.15	70-130	20	04/14/2010 0202
Bromoform	50	46		1	91	1.3	70-130	20	04/14/2010 0202
Bromomethane (Methyl bromide)	50	51		1	101	1.8	60-140	20	04/14/2010 0202
2-Butanone (MEK)	100	92		1	92	2.0	60-140	20	04/14/2010 0202
Carbon disulfide	50	61		1	123	1.3	60-140	20	04/14/2010 0202
Carbon tetrachloride	50	57		1	113	2.2	70-130	20	04/14/2010 0202
Chlorobenzene	50	52		1	104	2.6	70-130	20	04/14/2010 0202
Chloroethane	50	52		1	103	4.5	42-163	20	04/14/2010 0202
Chloroform	50	53		1	105	1.5	70-130	20	04/14/2010 0202
Chloromethane (Methyl chloride)	50	42		1	84	1.7	20-158	20	04/14/2010 0202
Cyclohexane	50	55		1	111	1.8	70-130	20	04/14/2010 0202
1,2-Dibromo-3-chloropropane (DBCP)	50	45		1	91	0.099	70-130	20	04/14/2010 0202
Dibromochloromethane	50	48		1	96	2.5	70-130	20	04/14/2010 0202
1,2-Dibromoethane (EDB)	50	50		1	99	2.2	70-130	20	04/14/2010 0202
1,4-Dichlorobenzene	50	52		1	104	1.3	70-130	20	04/14/2010 0202
1,2-Dichlorobenzene	50	52		1	105	0.54	70-130	20	04/14/2010 0202
1,3-Dichlorobenzene	50	53		1	106	1.7	70-130	20	04/14/2010 0202
Dichlorodifluoromethane	50	55		1	109	3.2	60-140	20	04/14/2010 0202
1,2-Dichloroethane	50	51		1	102	2.4	70-130	20	04/14/2010 0202
1,1-Dichloroethane	50	53		1	106	0.79	70-130	20	04/14/2010 0202
cis-1,2-Dichloroethene	50	52		1	104	1.7	70-130	20	04/14/2010 0202
1,1-Dichloroethene	50	55		1	110	3.1	70-130	20	04/14/2010 0202
trans-1,2-Dichloroethene	50	53		1	106	0.53	70-130	20	04/14/2010 0202
1,2-Dichloropropane	50	55		1	110	2.1	70-130	20	04/14/2010 0202
cis-1,3-Dichloropropene	50	50		1	101	2.6	70-130	20	04/14/2010 0202
trans-1,3-Dichloropropene	50	48		1	95	2.7	70-130	20	04/14/2010 0202
Ethylbenzene	50	54		1	109	3.7	70-130	20	04/14/2010 0202
2-Hexanone	100	97		1	97	3.4	60-140	20	04/14/2010 0202
Isopropylbenzene	50	59		1	119	1.4	70-130	20	04/14/2010 0202
Methyl acetate	50	51		1	102	1.1	15-128	20	04/14/2010 0202
Methyl tertiary butyl ether (MTBE)	50	53		1	107	2.4	70-130	20	04/14/2010 0202
4-Methyl-2-pentanone	100	97		1	97	0.24	60-140	20	04/14/2010 0202
Methylcyclohexane	50	57		1	115	5.3	70-130	20	04/14/2010 0202
Methylene chloride	50	49		1	97	1.8	70-130	20	04/14/2010 0202
Styrene	50	49		1	97	4.6	70-130	20	04/14/2010 0202
1,1,2,2-Tetrachloroethane	50	57		1	113	0.64	70-130	20	04/14/2010 0202
Tetrachloroethene	50	51		1	103	4.6	70-130	20	04/14/2010 0202
Toluene	50	56		1	112	2.9	70-130	20	04/14/2010 0202
1,1,2-Trichloro-1,2,2-Trifluoroethane	50	47		1	95	1.4	70-130	20	04/14/2010 0202
1,2,4-Trichlorobenzene	50	53		1	107	0.20	70-130	20	04/14/2010 0202
1,1,2-Trichloroethane	50	51		1	102	1.3	70-130	20	04/14/2010 0202
1,1,1-Trichloroethane	50	56		1	113	0.90	70-130	20	04/14/2010 0202

PQL = Practical quantitation limit
ND = Not detected at or above the MDL
P = The RPD between two GC columns exceeds 40%
J = Estimated result < PQL and ≥ MDL
N - Recovery is out of criteria
+ - RPD is out of criteria

Where applicable, all soil sample analysis are reported on a dry weight basis unless flagged with a "W"

Note: Calculations are performed before rounding to avoid round-off errors in calculated results

Volatile Organic Compounds by GC/MS - LCSD

Sample ID: LQ31466-003
Batch: 31466
Analytical Method: 8260B

Matrix: Aqueous
Prep Method: 5030B

Parameter	Spike Amount (ug/L)	Result (ug/L)	Q	Dil	% Rec	% RPD	% Rec Limit	% RPD Limit	Analysis Date
Trichloroethene	50	53		1	106	3.3	70-130	20	04/14/2010 0202
Trichlorofluoromethane	50	52		1	104	1.8	60-140	20	04/14/2010 0202
Vinyl chloride	50	49		1	99	1.8	60-140	20	04/14/2010 0202
Xylenes (total)	100	100		1	104	3.0	70-130	20	04/14/2010 0202

Surrogate	Q	% Rec	Acceptance Limit
Bromofluorobenzene		98	70-130
1,2-Dichloroethane-d4		98	70-130
Toluene-d8		107	70-130

PQL = Practical quantitation limit
ND = Not detected at or above the MDL
P = The RPD between two GC columns exceeds 40%
J = Estimated result < PQL and ≥ MDL
N - Recovery is out of criteria
+ - RPD is out of criteria

Where applicable, all soil sample analysis are reported on a dry weight basis unless flagged with a "W"

Note: Calculations are performed before rounding to avoid round-off errors in calculated results

Volatile Organic Compounds by GC/MS - MB

Sample ID: LQ31526-001
Batch: 31526
Analytical Method: 8260B

Matrix: Aqueous
Prep Method: 5030B

Parameter	Result	Q	Dil	PQL	MDL	Units	Analysis Date
Acetone	ND		1	10	0.061	ug/L	04/14/2010 1347
Benzene	ND		1	0.50	0.027	ug/L	04/14/2010 1347
Bromodichloromethane	ND		1	0.50	0.17	ug/L	04/14/2010 1347
Bromoform	ND		1	0.50	0.010	ug/L	04/14/2010 1347
Bromomethane (Methyl bromide)	ND		1	0.50	0.20	ug/L	04/14/2010 1347
2-Butanone (MEK)	ND		1	10	2.0	ug/L	04/14/2010 1347
Carbon disulfide	ND		1	0.50	0.097	ug/L	04/14/2010 1347
Carbon tetrachloride	ND		1	0.50	0.085	ug/L	04/14/2010 1347
Chlorobenzene	ND		1	0.50	0.17	ug/L	04/14/2010 1347
Chloroethane	ND		1	0.50	0.17	ug/L	04/14/2010 1347
Chloroform	ND		1	0.50	0.17	ug/L	04/14/2010 1347
Chloromethane (Methyl chloride)	ND		1	0.50	0.17	ug/L	04/14/2010 1347
Cyclohexane	ND		1	0.50	0.30	ug/L	04/14/2010 1347
1,2-Dibromo-3-chloropropane (DBCP)	ND		1	0.50	0.069	ug/L	04/14/2010 1347
Dibromochloromethane	ND		1	0.50	0.17	ug/L	04/14/2010 1347
1,2-Dibromoethane (EDB)	ND		1	0.50	0.061	ug/L	04/14/2010 1347
1,2-Dichlorobenzene	ND		1	0.50	0.17	ug/L	04/14/2010 1347
1,4-Dichlorobenzene	ND		1	0.50	0.17	ug/L	04/14/2010 1347
1,3-Dichlorobenzene	ND		1	0.50	0.17	ug/L	04/14/2010 1347
Dichlorodifluoromethane	ND		1	0.50	0.071	ug/L	04/14/2010 1347
1,1-Dichloroethane	ND		1	0.50	0.054	ug/L	04/14/2010 1347
1,2-Dichloroethane	ND		1	0.50	0.023	ug/L	04/14/2010 1347
1,1-Dichloroethene	ND		1	0.50	0.094	ug/L	04/14/2010 1347
trans-1,2-Dichloroethene	ND		1	0.50	0.079	ug/L	04/14/2010 1347
cis-1,2-Dichloroethene	ND		1	0.50	0.087	ug/L	04/14/2010 1347
1,2-Dichloropropane	ND		1	0.50	0.081	ug/L	04/14/2010 1347
trans-1,3-Dichloropropene	ND		1	0.50	0.18	ug/L	04/14/2010 1347
cis-1,3-Dichloropropene	ND		1	0.50	0.090	ug/L	04/14/2010 1347
Ethylbenzene	ND		1	0.50	0.17	ug/L	04/14/2010 1347
2-Hexanone	ND		1	10	0.27	ug/L	04/14/2010 1347
Isopropylbenzene	ND		1	0.50	0.029	ug/L	04/14/2010 1347
Methyl acetate	ND		1	1.0	0.30	ug/L	04/14/2010 1347
Methyl tertiary butyl ether (MTBE)	ND		1	0.50	0.019	ug/L	04/14/2010 1347
4-Methyl-2-pentanone	ND		1	10	0.31	ug/L	04/14/2010 1347
Methylcyclohexane	ND		1	5.0	0.95	ug/L	04/14/2010 1347
Methylene chloride	0.28	J	1	0.50	0.17	ug/L	04/14/2010 1347
Styrene	ND		1	0.50	0.015	ug/L	04/14/2010 1347
1,1,2,2-Tetrachloroethane	ND		1	0.50	0.013	ug/L	04/14/2010 1347
Tetrachloroethene	ND		1	0.50	0.014	ug/L	04/14/2010 1347
Toluene	ND		1	0.50	0.17	ug/L	04/14/2010 1347
1,1,2-Trichloro-1,2,2-Trifluoroethane	ND		1	0.50	0.30	ug/L	04/14/2010 1347
1,2,4-Trichlorobenzene	ND		1	0.50	0.17	ug/L	04/14/2010 1347
1,1,1-Trichloroethane	ND		1	0.50	0.029	ug/L	04/14/2010 1347
1,1,2-Trichloroethane	ND		1	0.50	0.031	ug/L	04/14/2010 1347

PQL = Practical quantitation limit
ND = Not detected at or above the MDL
P = The RPD between two GC columns exceeds 40%
J = Estimated result < PQL and ≥ MDL
N - Recovery is out of criteria
+ - RPD is out of criteria

Where applicable, all soil sample analysis are reported on a dry weight basis unless flagged with a "W"

Note: Calculations are performed before rounding to avoid round-off errors in calculated results

Volatile Organic Compounds by GC/MS - MB

Sample ID: LQ31526-001
Batch: 31526
Analytical Method: 8260B

Matrix: Aqueous
Prep Method: 5030B

Parameter	Result	Q	Dil	PQL	MDL	Units	Analysis Date
Trichloroethene	ND		1	0.50	0.024	ug/L	04/14/2010 1347
Trichlorofluoromethane	ND		1	0.50	0.051	ug/L	04/14/2010 1347
Vinyl chloride	ND		1	0.50	0.065	ug/L	04/14/2010 1347
Xylenes (total)	ND		1	0.50	0.17	ug/L	04/14/2010 1347

Surrogate	Q	% Rec	Acceptance Limit
Bromofluorobenzene		94	70-130
1,2-Dichloroethane-d4		101	70-130
Toluene-d8		105	70-130

PQL = Practical quantitation limit
ND = Not detected at or above the MDL
P = The RPD between two GC columns exceeds 40%
J = Estimated result < PQL and ≥ MDL
N - Recovery is out of criteria
+ - RPD is out of criteria

Where applicable, all soil sample analysis are reported on a dry weight basis unless flagged with a "W"

Note: Calculations are performed before rounding to avoid round-off errors in calculated results

Volatile Organic Compounds by GC/MS - LCS

Sample ID: LQ31526-002
Batch: 31526
Analytical Method: 8260B

Matrix: Aqueous
Prep Method: 5030B

Parameter	Spike Amount (ug/L)	Result (ug/L)	Q	Dil	% Rec	% Rec Limit	Analysis Date
Acetone	40	39		1	98	46-153	04/14/2010 1221
Benzene	20	21		1	107	70-130	04/14/2010 1221
Bromodichloromethane	20	20		1	102	70-130	04/14/2010 1221
Bromoform	20	24		1	120	70-130	04/14/2010 1221
Bromomethane (Methyl bromide)	20	21		1	103	60-140	04/14/2010 1221
2-Butanone (MEK)	40	36		1	89	60-140	04/14/2010 1221
Carbon disulfide	20	25		1	125	60-140	04/14/2010 1221
Carbon tetrachloride	20	22		1	112	70-130	04/14/2010 1221
Chlorobenzene	20	21		1	103	70-130	04/14/2010 1221
Chloroethane	20	19		1	96	42-163	04/14/2010 1221
Chloroform	20	21		1	107	70-130	04/14/2010 1221
Chloromethane (Methyl chloride)	20	16		1	81	20-158	04/14/2010 1221
Cyclohexane	20	22		1	112	70-130	04/14/2010 1221
1,2-Dibromo-3-chloropropane (DBCP)	20	21		1	105	70-130	04/14/2010 1221
Dibromochloromethane	20	20		1	101	70-130	04/14/2010 1221
1,2-Dibromoethane (EDB)	20	20		1	99	70-130	04/14/2010 1221
1,2-Dichlorobenzene	20	21		1	104	70-130	04/14/2010 1221
1,4-Dichlorobenzene	20	21		1	104	70-130	04/14/2010 1221
1,3-Dichlorobenzene	20	21		1	105	70-130	04/14/2010 1221
Dichlorodifluoromethane	20	22		1	110	60-140	04/14/2010 1221
1,1-Dichloroethane	20	21		1	107	70-130	04/14/2010 1221
1,2-Dichloroethane	20	20		1	101	70-130	04/14/2010 1221
1,1-Dichloroethene	20	22		1	108	70-130	04/14/2010 1221
trans-1,2-Dichloroethene	20	22		1	108	70-130	04/14/2010 1221
cis-1,2-Dichloroethene	20	21		1	104	70-130	04/14/2010 1221
1,2-Dichloropropane	20	21		1	107	70-130	04/14/2010 1221
trans-1,3-Dichloropropene	20	20		1	98	70-130	04/14/2010 1221
cis-1,3-Dichloropropene	20	21		1	103	70-130	04/14/2010 1221
Ethylbenzene	20	21		1	104	70-130	04/14/2010 1221
2-Hexanone	40	36		1	89	60-140	04/14/2010 1221
Isopropylbenzene	20	23		1	116	70-130	04/14/2010 1221
Methyl acetate	20	21		1	104	15-128	04/14/2010 1221
Methyl tertiary butyl ether (MTBE)	20	21		1	106	70-130	04/14/2010 1221
4-Methyl-2-pentanone	40	36		1	91	60-140	04/14/2010 1221
Methylcyclohexane	20	23		1	113	70-130	04/14/2010 1221
Methylene chloride	20	20		1	101	70-130	04/14/2010 1221
Styrene	20	18		1	92	70-130	04/14/2010 1221
1,1,2,2-Tetrachloroethane	20	22		1	112	70-130	04/14/2010 1221
Tetrachloroethene	20	21		1	104	70-130	04/14/2010 1221
Toluene	20	22		1	109	70-130	04/14/2010 1221
1,1,2-Trichloro-1,2,2-Trifluoroethane	20	20		1	100	70-130	04/14/2010 1221
1,2,4-Trichlorobenzene	20	22		1	111	70-130	04/14/2010 1221
1,1,1-Trichloroethane	20	23		1	113	70-130	04/14/2010 1221
1,1,2-Trichloroethane	20	20		1	101	70-130	04/14/2010 1221

PQL = Practical quantitation limit
ND = Not detected at or above the MDL
P = The RPD between two GC columns exceeds 40%
J = Estimated result < PQL and ≥ MDL
N - Recovery is out of criteria
+ - RPD is out of criteria

Where applicable, all soil sample analysis are reported on a dry weight basis unless flagged with a "W"

Note: Calculations are performed before rounding to avoid round-off errors in calculated results

Volatile Organic Compounds by GC/MS - LCS

Sample ID: LQ31526-002
Batch: 31526
Analytical Method: 8260B

Matrix: Aqueous
Prep Method: 5030B

Parameter	Spike Amount (ug/L)	Result (ug/L)	Q	Dil	% Rec	% Rec Limit	Analysis Date
Trichloroethene	20	21		1	105	70-130	04/14/2010 1221
Trichlorofluoromethane	20	21		1	105	60-140	04/14/2010 1221
Vinyl chloride	20	20		1	99	60-140	04/14/2010 1221
Xylenes (total)	40	39		1	98	70-130	04/14/2010 1221

Surrogate	Q	% Rec	Acceptance Limit
Bromofluorobenzene		95	70-130
1,2-Dichloroethane-d4		98	70-130
Toluene-d8		105	70-130

PQL = Practical quantitation limit
ND = Not detected at or above the MDL
P = The RPD between two GC columns exceeds 40%
J = Estimated result < PQL and ≥ MDL
N - Recovery is out of criteria
+ - RPD is out of criteria

Where applicable, all soil sample analysis are reported on a dry weight basis unless flagged with a "W"

Note: Calculations are performed before rounding to avoid round-off errors in calculated results

Volatile Organic Compounds by GC/MS - LCSD

Sample ID: LQ31526-003
Batch: 31526
Analytical Method: 8260B

Matrix: Aqueous
Prep Method: 5030B

Parameter	Spike Amount (ug/L)	Result (ug/L)	Q	Dil	% Rec	% RPD	% Rec Limit	% RPD Limit	Analysis Date
Acetone	40	38		1	94	3.4	46-153	20	04/14/2010 1242
Benzene	20	21		1	106	1.4	70-130	20	04/14/2010 1242
Bromodichloromethane	20	20		1	101	0.81	70-130	20	04/14/2010 1242
Bromoform	20	24		1	120	0.029	70-130	20	04/14/2010 1242
Bromomethane (Methyl bromide)	20	15	+	1	73	34	60-140	20	04/14/2010 1242
2-Butanone (MEK)	40	34		1	86	3.1	60-140	20	04/14/2010 1242
Carbon disulfide	20	24		1	122	2.7	60-140	20	04/14/2010 1242
Carbon tetrachloride	20	22		1	109	2.6	70-130	20	04/14/2010 1242
Chlorobenzene	20	21		1	103	0.39	70-130	20	04/14/2010 1242
Chloroethane	20	16		1	81	17	42-163	20	04/14/2010 1242
Chloroform	20	21		1	106	1.1	70-130	20	04/14/2010 1242
Chloromethane (Methyl chloride)	20	16		1	82	0.83	20-158	20	04/14/2010 1242
Cyclohexane	20	22		1	110	1.8	70-130	20	04/14/2010 1242
1,2-Dibromo-3-chloropropane (DBCP)	20	19		1	96	9.0	70-130	20	04/14/2010 1242
Dibromochloromethane	20	20		1	101	0.21	70-130	20	04/14/2010 1242
1,2-Dibromoethane (EDB)	20	20		1	100	1.6	70-130	20	04/14/2010 1242
1,2-Dichlorobenzene	20	20		1	101	2.9	70-130	20	04/14/2010 1242
1,4-Dichlorobenzene	20	21		1	103	1.4	70-130	20	04/14/2010 1242
1,3-Dichlorobenzene	20	21		1	104	0.83	70-130	20	04/14/2010 1242
Dichlorodifluoromethane	20	22		1	108	1.4	60-140	20	04/14/2010 1242
1,1-Dichloroethane	20	21		1	106	1.6	70-130	20	04/14/2010 1242
1,2-Dichloroethane	20	20		1	100	1.1	70-130	20	04/14/2010 1242
1,1-Dichloroethene	20	22		1	109	0.52	70-130	20	04/14/2010 1242
trans-1,2-Dichloroethene	20	21		1	105	2.6	70-130	20	04/14/2010 1242
cis-1,2-Dichloroethene	20	21		1	104	0.48	70-130	20	04/14/2010 1242
1,2-Dichloropropane	20	21		1	106	1.5	70-130	20	04/14/2010 1242
trans-1,3-Dichloropropene	20	19		1	97	1.1	70-130	20	04/14/2010 1242
cis-1,3-Dichloropropene	20	20		1	102	1.1	70-130	20	04/14/2010 1242
Ethylbenzene	20	21		1	105	1.1	70-130	20	04/14/2010 1242
2-Hexanone	40	35		1	88	1.3	60-140	20	04/14/2010 1242
Isopropylbenzene	20	23		1	114	2.5	70-130	20	04/14/2010 1242
Methyl acetate	20	20		1	100	3.4	15-128	20	04/14/2010 1242
Methyl tertiary butyl ether (MTBE)	20	21		1	104	1.8	70-130	20	04/14/2010 1242
4-Methyl-2-pentanone	40	36		1	89	1.4	60-140	20	04/14/2010 1242
Methylcyclohexane	20	22		1	110	2.4	70-130	20	04/14/2010 1242
Methylene chloride	20	20		1	99	1.4	70-130	20	04/14/2010 1242
Styrene	20	19		1	94	1.9	70-130	20	04/14/2010 1242
1,1,2,2-Tetrachloroethane	20	22		1	108	4.2	70-130	20	04/14/2010 1242
Tetrachloroethene	20	20		1	101	2.4	70-130	20	04/14/2010 1242
Toluene	20	22		1	108	0.50	70-130	20	04/14/2010 1242
1,1,2-Trichloro-1,2,2-Trifluoroethane	20	20		1	98	2.4	70-130	20	04/14/2010 1242
1,2,4-Trichlorobenzene	20	20		1	102	8.5	70-130	20	04/14/2010 1242
1,1,1-Trichloroethane	20	22		1	111	1.8	70-130	20	04/14/2010 1242
1,1,2-Trichloroethane	20	20		1	101	0.0050	70-130	20	04/14/2010 1242

PQL = Practical quantitation limit
ND = Not detected at or above the MDL
P = The RPD between two GC columns exceeds 40%
J = Estimated result < PQL and ≥ MDL
N - Recovery is out of criteria
+ - RPD is out of criteria

Where applicable, all soil sample analysis are reported on a dry weight basis unless flagged with a "W"

Note: Calculations are performed before rounding to avoid round-off errors in calculated results

Volatile Organic Compounds by GC/MS - LCSD

Sample ID: LQ31526-003
Batch: 31526
Analytical Method: 8260B

Matrix: Aqueous
Prep Method: 5030B

Parameter	Spike Amount (ug/L)	Result (ug/L)	Q	Dil	% Rec	% RPD	% Rec Limit	% RPD Limit	Analysis Date
Trichloroethene	20	21		1	104	1.1	70-130	20	04/14/2010 1242
Trichlorofluoromethane	20	20		1	100	5.5	60-140	20	04/14/2010 1242
Vinyl chloride	20	20		1	101	1.6	60-140	20	04/14/2010 1242
Xylenes (total)	40	38		1	96	1.5	70-130	20	04/14/2010 1242

Surrogate	Q	% Rec	Acceptance Limit
Bromofluorobenzene		99	70-130
1,2-Dichloroethane-d4		97	70-130
Toluene-d8		106	70-130

PQL = Practical quantitation limit
ND = Not detected at or above the MDL
P = The RPD between two GC columns exceeds 40%
J = Estimated result < PQL and ≥ MDL
N - Recovery is out of criteria
+ - RPD is out of criteria

Where applicable, all soil sample analysis are reported on a dry weight basis unless flagged with a "W"

Note: Calculations are performed before rounding to avoid round-off errors in calculated results

Volatile Organic Compounds by GC/MS - MB

Sample ID: LQ31760-001
Batch: 31760
Analytical Method: 8260B

Matrix: Solid
Prep Method: 5035

Parameter	Result	Q	Dil	PQL	MDL	Units	Analysis Date
Acetone	ND		1	20	6.7	ug/kg	04/17/2010 1353
Benzene	ND		1	5.0	1.1	ug/kg	04/17/2010 1353
Bromodichloromethane	ND		1	5.0	1.7	ug/kg	04/17/2010 1353
Bromoform	ND		1	5.0	0.70	ug/kg	04/17/2010 1353
Bromomethane (Methyl bromide)	ND		1	5.0	1.8	ug/kg	04/17/2010 1353
2-Butanone (MEK)	ND		1	10	2.4	ug/kg	04/17/2010 1353
Carbon disulfide	ND		1	5.0	1.3	ug/kg	04/17/2010 1353
Carbon tetrachloride	ND		1	5.0	1.8	ug/kg	04/17/2010 1353
Chlorobenzene	ND		1	5.0	1.7	ug/kg	04/17/2010 1353
Chloroethane	ND		1	5.0	1.3	ug/kg	04/17/2010 1353
Chloroform	ND		1	5.0	0.83	ug/kg	04/17/2010 1353
Chloromethane (Methyl chloride)	ND		1	5.0	1.0	ug/kg	04/17/2010 1353
Cyclohexane	ND		1	5.0	0.67	ug/kg	04/17/2010 1353
1,2-Dibromo-3-chloropropane (DBCP)	ND		1	5.0	1.5	ug/kg	04/17/2010 1353
Dibromochloromethane	ND		1	5.0	1.7	ug/kg	04/17/2010 1353
1,2-Dibromoethane (EDB)	ND		1	5.0	0.85	ug/kg	04/17/2010 1353
1,4-Dichlorobenzene	ND		1	5.0	1.7	ug/kg	04/17/2010 1353
1,2-Dichlorobenzene	ND		1	5.0	1.7	ug/kg	04/17/2010 1353
1,3-Dichlorobenzene	ND		1	5.0	1.7	ug/kg	04/17/2010 1353
Dichlorodifluoromethane	ND		1	5.0	1.6	ug/kg	04/17/2010 1353
1,1-Dichloroethane	ND		1	5.0	0.73	ug/kg	04/17/2010 1353
1,2-Dichloroethane	ND		1	5.0	1.0	ug/kg	04/17/2010 1353
trans-1,2-Dichloroethene	ND		1	5.0	1.5	ug/kg	04/17/2010 1353
1,1-Dichloroethene	ND		1	5.0	1.7	ug/kg	04/17/2010 1353
cis-1,2-Dichloroethene	ND		1	5.0	0.76	ug/kg	04/17/2010 1353
1,2-Dichloropropane	ND		1	5.0	0.91	ug/kg	04/17/2010 1353
trans-1,3-Dichloropropene	ND		1	5.0	0.82	ug/kg	04/17/2010 1353
cis-1,3-Dichloropropene	ND		1	5.0	0.68	ug/kg	04/17/2010 1353
Ethylbenzene	ND		1	5.0	1.7	ug/kg	04/17/2010 1353
2-Hexanone	2.8	J	1	10	1.3	ug/kg	04/17/2010 1353
Isopropylbenzene	ND		1	5.0	0.80	ug/kg	04/17/2010 1353
Methyl acetate	ND		1	5.0	0.67	ug/kg	04/17/2010 1353
Methyl tertiary butyl ether (MTBE)	ND		1	5.0	0.40	ug/kg	04/17/2010 1353
4-Methyl-2-pentanone	ND		1	10	1.5	ug/kg	04/17/2010 1353
Methylcyclohexane	ND		1	5.0	0.61	ug/kg	04/17/2010 1353
Methylene chloride	ND		1	5.0	2.6	ug/kg	04/17/2010 1353
Styrene	ND		1	5.0	1.1	ug/kg	04/17/2010 1353
1,1,2,2-Tetrachloroethane	ND		1	5.0	0.47	ug/kg	04/17/2010 1353
Tetrachloroethene	ND		1	5.0	2.3	ug/kg	04/17/2010 1353
Toluene	ND		1	5.0	1.7	ug/kg	04/17/2010 1353
1,1,2-Trichloro-1,2,2-Trifluoroethane	ND		1	5.0	2.1	ug/kg	04/17/2010 1353
1,2,4-Trichlorobenzene	ND		1	5.0	1.7	ug/kg	04/17/2010 1353
1,1,1-Trichloroethane	ND		1	5.0	0.85	ug/kg	04/17/2010 1353
1,1,2-Trichloroethane	ND		1	5.0	0.79	ug/kg	04/17/2010 1353

PQL = Practical quantitation limit
ND = Not detected at or above the MDL
P = The RPD between two GC columns exceeds 40%
J = Estimated result < PQL and ≥ MDL
N - Recovery is out of criteria
+ - RPD is out of criteria

Where applicable, all soil sample analysis are reported on a dry weight basis unless flagged with a "W"

Note: Calculations are performed before rounding to avoid round-off errors in calculated results

Volatile Organic Compounds by GC/MS - MB

Sample ID: LQ31760-001
Batch: 31760
Analytical Method: 8260B

Matrix: Solid
Prep Method: 5035

Parameter	Result	Q	Dil	PQL	MDL	Units	Analysis Date
Trichloroethene	ND		1	5.0	1.9	ug/kg	04/17/2010 1353
Trichlorofluoromethane	ND		1	5.0	1.5	ug/kg	04/17/2010 1353
Vinyl chloride	ND		1	5.0	0.86	ug/kg	04/17/2010 1353
Xylenes (total)	ND		1	5.0	2.9	ug/kg	04/17/2010 1353

Surrogate	Q	% Rec	Acceptance Limit
Bromofluorobenzene		98	47-138
1,2-Dichloroethane-d4		100	53-142
Toluene-d8		100	68-124

PQL = Practical quantitation limit
ND = Not detected at or above the MDL
P = The RPD between two GC columns exceeds 40%
J = Estimated result < PQL and ≥ MDL
N - Recovery is out of criteria
+ - RPD is out of criteria

Where applicable, all soil sample analysis are reported on a dry weight basis unless flagged with a "W"

Note: Calculations are performed before rounding to avoid round-off errors in calculated results

Volatile Organic Compounds by GC/MS - LCS

Sample ID: LQ31760-002
Batch: 31760
Analytical Method: 8260B

Matrix: Solid
Prep Method: 5035

Parameter	Spike Amount (ug/kg)	Result (ug/kg)	Q	Dil	% Rec	% Rec Limit	Analysis Date
Acetone	100	130		1	133	42-149	04/17/2010 1200
Benzene	50	46		1	92	69-123	04/17/2010 1200
Bromodichloromethane	50	47		1	94	69-121	04/17/2010 1200
Bromoform	50	43		1	85	61-119	04/17/2010 1200
Bromomethane (Methyl bromide)	50	39		1	79	35-144	04/17/2010 1200
2-Butanone (MEK)	100	98		1	98	57-148	04/17/2010 1200
Carbon disulfide	50	45		1	89	58-122	04/17/2010 1200
Carbon tetrachloride	50	45		1	90	58-136	04/17/2010 1200
Chlorobenzene	50	45		1	90	59-129	04/17/2010 1200
Chloroethane	50	40		1	80	50-132	04/17/2010 1200
Chloroform	50	47		1	94	71-125	04/17/2010 1200
Chloromethane (Methyl chloride)	50	47		1	95	34-134	04/17/2010 1200
Cyclohexane	50	44		1	88	53-139	04/17/2010 1200
1,2-Dibromo-3-chloropropane (DBCP)	50	41		1	83	55-125	04/17/2010 1200
Dibromochloromethane	50	46		1	92	66-119	04/17/2010 1200
1,2-Dibromoethane (EDB)	50	46		1	92	74-124	04/17/2010 1200
1,4-Dichlorobenzene	50	43		1	86	52-133	04/17/2010 1200
1,2-Dichlorobenzene	50	42		1	85	57-131	04/17/2010 1200
1,3-Dichlorobenzene	50	44		1	87	51-134	04/17/2010 1200
Dichlorodifluoromethane	50	37		1	74	10-157	04/17/2010 1200
1,1-Dichloroethane	50	47		1	94	71-127	04/17/2010 1200
1,2-Dichloroethane	50	47		1	94	67-129	04/17/2010 1200
trans-1,2-Dichloroethene	50	45		1	91	68-131	04/17/2010 1200
1,1-Dichloroethene	50	45		1	89	69-138	04/17/2010 1200
cis-1,2-Dichloroethene	50	46		1	91	70-122	04/17/2010 1200
1,2-Dichloropropane	50	46		1	93	72-124	04/17/2010 1200
trans-1,3-Dichloropropene	50	46		1	92	70-124	04/17/2010 1200
cis-1,3-Dichloropropene	50	48		1	95	70-126	04/17/2010 1200
Ethylbenzene	50	45		1	90	59-128	04/17/2010 1200
2-Hexanone	100	93		1	93	54-137	04/17/2010 1200
Isopropylbenzene	50	43		1	86	50-136	04/17/2010 1200
Methyl acetate	50	47		1	94	59-137	04/17/2010 1200
Methyl tertiary butyl ether (MTBE)	50	44		1	88	72-122	04/17/2010 1200
4-Methyl-2-pentanone	100	83		1	83	60-134	04/17/2010 1200
Methylcyclohexane	50	43		1	86	41-144	04/17/2010 1200
Methylene chloride	50	44		1	88	77-129	04/17/2010 1200
Styrene	50	46		1	91	54-136	04/17/2010 1200
1,1,2,2-Tetrachloroethane	50	42		1	83	69-132	04/17/2010 1200
Tetrachloroethene	50	44		1	89	70-130	04/17/2010 1200
Toluene	50	46		1	93	61-129	04/17/2010 1200
1,1,2-Trichloro-1,2,2-Trifluoroethane	50	35		1	70	49-136	04/17/2010 1200
1,2,4-Trichlorobenzene	50	37		1	74	34-145	04/17/2010 1200
1,1,1-Trichloroethane	50	45		1	90	63-128	04/17/2010 1200
1,1,2-Trichloroethane	50	43		1	87	55-128	04/17/2010 1200

PQL = Practical quantitation limit
ND = Not detected at or above the MDL
P = The RPD between two GC columns exceeds 40%
J = Estimated result < PQL and ≥ MDL
N - Recovery is out of criteria
+ - RPD is out of criteria

Where applicable, all soil sample analysis are reported on a dry weight basis unless flagged with a "W"

Note: Calculations are performed before rounding to avoid round-off errors in calculated results

Volatile Organic Compounds by GC/MS - LCS

Sample ID: LQ31760-002
Batch: 31760
Analytical Method: 8260B

Matrix: Solid
Prep Method: 5035

Parameter	Spike Amount (ug/kg)	Result (ug/kg)	Q	Dil	% Rec	% Rec Limit	Analysis Date
Trichloroethene	50	46		1	92	62-126	04/17/2010 1200
Trichlorofluoromethane	50	46		1	91	45-138	04/17/2010 1200
Vinyl chloride	50	45		1	90	42-132	04/17/2010 1200
Xylenes (total)	100	89		1	89	58-128	04/17/2010 1200

Surrogate	Q	% Rec	Acceptance Limit
Bromofluorobenzene		91	47-138
1,2-Dichloroethane-d4		84	53-142
Toluene-d8		92	68-124

PQL = Practical quantitation limit
ND = Not detected at or above the MDL
P = The RPD between two GC columns exceeds 40%
J = Estimated result < PQL and ≥ MDL
N - Recovery is out of criteria
+ - RPD is out of criteria

Where applicable, all soil sample analysis are reported on a dry weight basis unless flagged with a "W"

Note: Calculations are performed before rounding to avoid round-off errors in calculated results

Volatile Organic Compounds by GC/MS - LCSD

Sample ID: LQ31760-003
Batch: 31760
Analytical Method: 8260B

Matrix: Solid
Prep Method: 5035

Parameter	Spike Amount (ug/kg)	Result (ug/kg)	Q	Dil	% Rec	% RPD	% Rec Limit	% RPD Limit	Analysis Date
Acetone	100	120		1	121	10	42-149	20	04/17/2010 1223
Benzene	50	46		1	92	0.21	69-123	20	04/17/2010 1223
Bromodichloromethane	50	47		1	93	0.92	69-121	20	04/17/2010 1223
Bromoform	50	41		1	83	3.3	61-119	20	04/17/2010 1223
Bromomethane (Methyl bromide)	50	43		1	86	8.9	35-144	20	04/17/2010 1223
2-Butanone (MEK)	100	92		1	92	6.6	57-148	20	04/17/2010 1223
Carbon disulfide	50	46		1	92	3.4	58-122	20	04/17/2010 1223
Carbon tetrachloride	50	47		1	94	5.1	58-136	20	04/17/2010 1223
Chlorobenzene	50	44		1	87	3.2	59-129	20	04/17/2010 1223
Chloroethane	50	47		1	93	15	50-132	20	04/17/2010 1223
Chloroform	50	46		1	93	0.94	71-125	20	04/17/2010 1223
Chloromethane (Methyl chloride)	50	51		1	103	7.8	34-134	20	04/17/2010 1223
Cyclohexane	50	44		1	89	1.0	53-139	20	04/17/2010 1223
1,2-Dibromo-3-chloropropane (DBCP)	50	44		1	88	6.3	55-125	20	04/17/2010 1223
Dibromochloromethane	50	44		1	88	4.4	66-119	20	04/17/2010 1223
1,2-Dibromoethane (EDB)	50	43		1	85	7.2	74-124	20	04/17/2010 1223
1,4-Dichlorobenzene	50	41		1	82	4.9	52-133	20	04/17/2010 1223
1,2-Dichlorobenzene	50	42		1	83	1.5	57-131	20	04/17/2010 1223
1,3-Dichlorobenzene	50	41		1	82	6.2	51-134	20	04/17/2010 1223
Dichlorodifluoromethane	50	40		1	81	9.3	10-157	20	04/17/2010 1223
1,1-Dichloroethane	50	46		1	93	1.6	71-127	20	04/17/2010 1223
1,2-Dichloroethane	50	45		1	90	3.8	67-129	20	04/17/2010 1223
trans-1,2-Dichloroethene	50	46		1	92	1.4	68-131	20	04/17/2010 1223
1,1-Dichloroethene	50	45		1	91	1.6	69-138	20	04/17/2010 1223
cis-1,2-Dichloroethene	50	46		1	93	1.6	70-122	20	04/17/2010 1223
1,2-Dichloropropane	50	45		1	90	2.7	72-124	20	04/17/2010 1223
trans-1,3-Dichloropropene	50	44		1	89	3.6	70-124	20	04/17/2010 1223
cis-1,3-Dichloropropene	50	46		1	91	4.5	70-126	20	04/17/2010 1223
Ethylbenzene	50	44		1	87	2.4	59-128	20	04/17/2010 1223
2-Hexanone	100	85		1	85	8.7	54-137	20	04/17/2010 1223
Isopropylbenzene	50	42		1	84	2.5	50-136	20	04/17/2010 1223
Methyl acetate	50	43		1	86	9.0	59-137	20	04/17/2010 1223
Methyl tertiary butyl ether (MTBE)	50	44		1	89	1.2	72-122	20	04/17/2010 1223
4-Methyl-2-pentanone	100	80		1	80	3.0	60-134	20	04/17/2010 1223
Methylcyclohexane	50	45		1	89	3.5	41-144	20	04/17/2010 1223
Methylene chloride	50	44		1	88	0.78	77-129	20	04/17/2010 1223
Styrene	50	44		1	89	3.1	54-136	20	04/17/2010 1223
1,1,2,2-Tetrachloroethane	50	40		1	79	4.9	69-132	20	04/17/2010 1223
Tetrachloroethene	50	44		1	87	1.4	70-130	20	04/17/2010 1223
Toluene	50	45		1	90	3.3	61-129	20	04/17/2010 1223
1,1,2-Trichloro-1,2,2-Trifluoroethane	50	38		1	75	6.9	49-136	20	04/17/2010 1223
1,2,4-Trichlorobenzene	50	43		1	85	14	34-145	20	04/17/2010 1223
1,1,1-Trichloroethane	50	47		1	94	4.1	63-128	20	04/17/2010 1223
1,1,2-Trichloroethane	50	42		1	85	2.4	55-128	20	04/17/2010 1223

PQL = Practical quantitation limit
ND = Not detected at or above the MDL
P = The RPD between two GC columns exceeds 40%
J = Estimated result < PQL and ≥ MDL
N - Recovery is out of criteria
+ - RPD is out of criteria

Where applicable, all soil sample analysis are reported on a dry weight basis unless flagged with a "W"

Note: Calculations are performed before rounding to avoid round-off errors in calculated results

Volatile Organic Compounds by GC/MS - LCSD

Sample ID: LQ31760-003
Batch: 31760
Analytical Method: 8260B

Matrix: Solid
Prep Method: 5035

Parameter	Spike Amount (ug/kg)	Result (ug/kg)	Q	Dil	% Rec	% RPD	% Rec Limit	% RPD Limit	Analysis Date
Trichloroethene	50	46		1	91	0.77	62-126	20	04/17/2010 1223
Trichlorofluoromethane	50	47		1	95	3.9	45-138	20	04/17/2010 1223
Vinyl chloride	50	51		1	102	12	42-132	20	04/17/2010 1223
Xylenes (total)	100	87		1	87	2.5	58-128	20	04/17/2010 1223

Surrogate	Q	% Rec	Acceptance Limit
Bromofluorobenzene		86	47-138
1,2-Dichloroethane-d4		80	53-142
Toluene-d8		86	68-124

PQL = Practical quantitation limit
ND = Not detected at or above the MDL
P = The RPD between two GC columns exceeds 40%
J = Estimated result < PQL and ≥ MDL
N - Recovery is out of criteria
+ - RPD is out of criteria

Where applicable, all soil sample analysis are reported on a dry weight basis unless flagged with a "W"

Note: Calculations are performed before rounding to avoid round-off errors in calculated results

Volatile Organic Compounds by GC/MS - MB

Sample ID: LQ31830-001
Batch: 31830
Analytical Method: 8260B

Matrix: Solid
Prep Method: 5035

Parameter	Result	Q	Dil	PQL	MDL	Units	Analysis Date
Acetone	ND		1	20	6.7	ug/kg	04/20/2010 0320
Benzene	ND		1	5.0	1.1	ug/kg	04/20/2010 0320
Bromodichloromethane	ND		1	5.0	1.7	ug/kg	04/20/2010 0320
Bromoform	ND		1	5.0	0.70	ug/kg	04/20/2010 0320
Bromomethane (Methyl bromide)	ND		1	5.0	1.8	ug/kg	04/20/2010 0320
2-Butanone (MEK)	ND		1	10	2.4	ug/kg	04/20/2010 0320
Carbon disulfide	ND		1	5.0	1.3	ug/kg	04/20/2010 0320
Carbon tetrachloride	ND		1	5.0	1.8	ug/kg	04/20/2010 0320
Chlorobenzene	ND		1	5.0	1.7	ug/kg	04/20/2010 0320
Chloroethane	ND		1	5.0	1.3	ug/kg	04/20/2010 0320
Chloroform	ND		1	5.0	0.83	ug/kg	04/20/2010 0320
Chloromethane (Methyl chloride)	ND		1	5.0	1.0	ug/kg	04/20/2010 0320
Cyclohexane	ND		1	5.0	0.67	ug/kg	04/20/2010 0320
1,2-Dibromo-3-chloropropane (DBCP)	ND		1	5.0	1.5	ug/kg	04/20/2010 0320
Dibromochloromethane	ND		1	5.0	1.7	ug/kg	04/20/2010 0320
1,2-Dibromoethane (EDB)	ND		1	5.0	0.85	ug/kg	04/20/2010 0320
1,4-Dichlorobenzene	ND		1	5.0	1.7	ug/kg	04/20/2010 0320
1,2-Dichlorobenzene	ND		1	5.0	1.7	ug/kg	04/20/2010 0320
1,3-Dichlorobenzene	ND		1	5.0	1.7	ug/kg	04/20/2010 0320
Dichlorodifluoromethane	ND		1	5.0	1.6	ug/kg	04/20/2010 0320
1,1-Dichloroethane	ND		1	5.0	0.73	ug/kg	04/20/2010 0320
1,2-Dichloroethane	ND		1	5.0	1.0	ug/kg	04/20/2010 0320
trans-1,2-Dichloroethene	ND		1	5.0	1.5	ug/kg	04/20/2010 0320
1,1-Dichloroethene	ND		1	5.0	1.7	ug/kg	04/20/2010 0320
cis-1,2-Dichloroethene	ND		1	5.0	0.76	ug/kg	04/20/2010 0320
1,2-Dichloropropane	ND		1	5.0	0.91	ug/kg	04/20/2010 0320
cis-1,3-Dichloropropene	ND		1	5.0	0.68	ug/kg	04/20/2010 0320
trans-1,3-Dichloropropene	ND		1	5.0	0.82	ug/kg	04/20/2010 0320
Ethylbenzene	ND		1	5.0	1.7	ug/kg	04/20/2010 0320
2-Hexanone	ND		1	10	1.3	ug/kg	04/20/2010 0320
Isopropylbenzene	ND		1	5.0	0.80	ug/kg	04/20/2010 0320
Methyl acetate	ND		1	5.0	0.67	ug/kg	04/20/2010 0320
Methyl tertiary butyl ether (MTBE)	ND		1	5.0	0.40	ug/kg	04/20/2010 0320
4-Methyl-2-pentanone	ND		1	10	1.5	ug/kg	04/20/2010 0320
Methylcyclohexane	ND		1	5.0	0.61	ug/kg	04/20/2010 0320
Methylene chloride	ND		1	5.0	2.6	ug/kg	04/20/2010 0320
Styrene	ND		1	5.0	1.1	ug/kg	04/20/2010 0320
1,1,2,2-Tetrachloroethane	ND		1	5.0	0.47	ug/kg	04/20/2010 0320
Tetrachloroethene	ND		1	5.0	2.3	ug/kg	04/20/2010 0320
Toluene	ND		1	5.0	1.7	ug/kg	04/20/2010 0320
1,1,2-Trichloro-1,2,2-Trifluoroethane	ND		1	5.0	2.1	ug/kg	04/20/2010 0320
1,2,4-Trichlorobenzene	ND		1	5.0	1.7	ug/kg	04/20/2010 0320
1,1,2-Trichloroethane	ND		1	5.0	0.79	ug/kg	04/20/2010 0320
1,1,1-Trichloroethane	ND		1	5.0	0.85	ug/kg	04/20/2010 0320

PQL = Practical quantitation limit
ND = Not detected at or above the MDL
P = The RPD between two GC columns exceeds 40%
J = Estimated result < PQL and ≥ MDL
N - Recovery is out of criteria
+ - RPD is out of criteria

Where applicable, all soil sample analysis are reported on a dry weight basis unless flagged with a "W"

Note: Calculations are performed before rounding to avoid round-off errors in calculated results

Volatile Organic Compounds by GC/MS - MB

Sample ID: LQ31830-001
Batch: 31830
Analytical Method: 8260B

Matrix: Solid
Prep Method: 5035

Parameter	Result	Q	Dil	PQL	MDL	Units	Analysis Date
Trichloroethene	ND		1	5.0	1.9	ug/kg	04/20/2010 0320
Trichlorofluoromethane	ND		1	5.0	1.5	ug/kg	04/20/2010 0320
Vinyl chloride	ND		1	5.0	0.86	ug/kg	04/20/2010 0320
Xylenes (total)	ND		1	5.0	2.9	ug/kg	04/20/2010 0320

Surrogate	Q	% Rec	Acceptance Limit
Bromofluorobenzene		98	47-138
1,2-Dichloroethane-d4		87	53-142
Toluene-d8		86	68-124

PQL = Practical quantitation limit
ND = Not detected at or above the MDL
P = The RPD between two GC columns exceeds 40%
J = Estimated result < PQL and ≥ MDL
N - Recovery is out of criteria
+ - RPD is out of criteria

Where applicable, all soil sample analysis are reported on a dry weight basis unless flagged with a "W"

Note: Calculations are performed before rounding to avoid round-off errors in calculated results

Volatile Organic Compounds by GC/MS - LCS

Sample ID: LQ31830-002
Batch: 31830
Analytical Method: 8260B

Matrix: Solid
Prep Method: 5035

Parameter	Spike Amount (ug/kg)	Result (ug/kg)	Q	Dil	% Rec	% Rec Limit	Analysis Date
Acetone	100	150		1	147	42-149	04/20/2010 0107
Benzene	50	52		1	105	69-123	04/20/2010 0107
Bromodichloromethane	50	54		1	109	69-121	04/20/2010 0107
Bromoform	50	50		1	100	61-119	04/20/2010 0107
Bromomethane (Methyl bromide)	50	47		1	94	35-144	04/20/2010 0107
2-Butanone (MEK)	100	130		1	126	57-148	04/20/2010 0107
Carbon disulfide	50	46		1	93	58-122	04/20/2010 0107
Carbon tetrachloride	50	47		1	95	58-136	04/20/2010 0107
Chlorobenzene	50	55		1	109	59-129	04/20/2010 0107
Chloroethane	50	43		1	87	50-132	04/20/2010 0107
Chloroform	50	52		1	105	71-125	04/20/2010 0107
Chloromethane (Methyl chloride)	50	55		1	111	34-134	04/20/2010 0107
Cyclohexane	50	47		1	94	53-139	04/20/2010 0107
1,2-Dibromo-3-chloropropane (DBCP)	50	50		1	100	55-125	04/20/2010 0107
Dibromochloromethane	50	56		1	113	66-119	04/20/2010 0107
1,2-Dibromoethane (EDB)	50	57		1	113	74-124	04/20/2010 0107
1,4-Dichlorobenzene	50	55		1	111	52-133	04/20/2010 0107
1,2-Dichlorobenzene	50	54		1	108	57-131	04/20/2010 0107
1,3-Dichlorobenzene	50	55		1	111	51-134	04/20/2010 0107
Dichlorodifluoromethane	50	47		1	93	10-157	04/20/2010 0107
1,1-Dichloroethane	50	52		1	104	71-127	04/20/2010 0107
1,2-Dichloroethane	50	55		1	111	67-129	04/20/2010 0107
trans-1,2-Dichloroethene	50	51		1	102	68-131	04/20/2010 0107
1,1-Dichloroethene	50	49		1	98	69-138	04/20/2010 0107
cis-1,2-Dichloroethene	50	53		1	105	70-122	04/20/2010 0107
1,2-Dichloropropane	50	54		1	109	72-124	04/20/2010 0107
cis-1,3-Dichloropropene	50	56		1	113	70-126	04/20/2010 0107
trans-1,3-Dichloropropene	50	57		1	114	70-124	04/20/2010 0107
Ethylbenzene	50	53		1	106	59-128	04/20/2010 0107
2-Hexanone	100	120		1	124	54-137	04/20/2010 0107
Isopropylbenzene	50	54		1	108	50-136	04/20/2010 0107
Methyl acetate	50	54		1	109	59-137	04/20/2010 0107
Methyl tertiary butyl ether (MTBE)	50	53		1	105	72-122	04/20/2010 0107
4-Methyl-2-pentanone	100	110		1	105	60-134	04/20/2010 0107
Methylcyclohexane	50	47		1	95	41-144	04/20/2010 0107
Methylene chloride	50	52		1	104	77-129	04/20/2010 0107
Styrene	50	55		1	110	54-136	04/20/2010 0107
1,1,2,2-Tetrachloroethane	50	58		1	115	69-132	04/20/2010 0107
Tetrachloroethene	50	52		1	103	70-130	04/20/2010 0107
Toluene	50	52		1	105	61-129	04/20/2010 0107
1,1,2-Trichloro-1,2,2-Trifluoroethane	50	42		1	83	49-136	04/20/2010 0107
1,2,4-Trichlorobenzene	50	47		1	94	34-145	04/20/2010 0107
1,1,2-Trichloroethane	50	56		1	111	55-128	04/20/2010 0107
1,1,1-Trichloroethane	50	48		1	95	63-128	04/20/2010 0107

PQL = Practical quantitation limit
ND = Not detected at or above the MDL
P = The RPD between two GC columns exceeds 40%
J = Estimated result < PQL and ≥ MDL
N - Recovery is out of criteria
+ - RPD is out of criteria

Where applicable, all soil sample analysis are reported on a dry weight basis unless flagged with a "W"

Note: Calculations are performed before rounding to avoid round-off errors in calculated results

Volatile Organic Compounds by GC/MS - LCS

Sample ID: LQ31830-002
Batch: 31830
Analytical Method: 8260B

Matrix: Solid
Prep Method: 5035

Parameter	Spike Amount (ug/kg)	Result (ug/kg)	Q	Dil	% Rec	% Rec Limit	Analysis Date
Trichloroethene	50	51		1	103	62-126	04/20/2010 0107
Trichlorofluoromethane	50	49		1	99	45-138	04/20/2010 0107
Vinyl chloride	50	52		1	104	42-132	04/20/2010 0107
Xylenes (total)	100	110		1	106	58-128	04/20/2010 0107

Surrogate	Q	% Rec	Acceptance Limit
Bromofluorobenzene		100	47-138
1,2-Dichloroethane-d4		88	53-142
Toluene-d8		99	68-124

PQL = Practical quantitation limit
ND = Not detected at or above the MDL
P = The RPD between two GC columns exceeds 40%
J = Estimated result < PQL and ≥ MDL
N - Recovery is out of criteria
+ - RPD is out of criteria

Where applicable, all soil sample analysis are reported on a dry weight basis unless flagged with a "W"

Note: Calculations are performed before rounding to avoid round-off errors in calculated results

Volatile Organic Compounds by GC/MS - LCSD

Sample ID: LQ31830-003
Batch: 31830
Analytical Method: 8260B

Matrix: Solid
Prep Method: 5035

Parameter	Spike Amount (ug/kg)	Result (ug/kg)	Q	Dil	% Rec	% RPD	% Rec Limit	% RPD Limit	Analysis Date
Acetone	100	150		1	146	0.82	42-149	20	04/20/2010 0130
Benzene	50	51		1	101	3.0	69-123	20	04/20/2010 0130
Bromodichloromethane	50	52		1	103	5.3	69-121	20	04/20/2010 0130
Bromoform	50	52		1	104	4.5	61-119	20	04/20/2010 0130
Bromomethane (Methyl bromide)	50	47		1	94	0.26	35-144	20	04/20/2010 0130
2-Butanone (MEK)	100	120		1	117	7.6	57-148	20	04/20/2010 0130
Carbon disulfide	50	46		1	92	0.66	58-122	20	04/20/2010 0130
Carbon tetrachloride	50	47		1	95	0.0042	58-136	20	04/20/2010 0130
Chlorobenzene	50	52		1	105	4.3	59-129	20	04/20/2010 0130
Chloroethane	50	47		1	95	8.7	50-132	20	04/20/2010 0130
Chloroform	50	49		1	97	7.4	71-125	20	04/20/2010 0130
Chloromethane (Methyl chloride)	50	54		1	108	2.0	34-134	20	04/20/2010 0130
Cyclohexane	50	47		1	95	1.3	53-139	20	04/20/2010 0130
1,2-Dibromo-3-chloropropane (DBCP)	50	59		1	117	16	55-125	20	04/20/2010 0130
Dibromochloromethane	50	55		1	111	1.7	66-119	20	04/20/2010 0130
1,2-Dibromoethane (EDB)	50	57		1	114	0.60	74-124	20	04/20/2010 0130
1,4-Dichlorobenzene	50	54		1	107	3.2	52-133	20	04/20/2010 0130
1,2-Dichlorobenzene	50	53		1	106	1.8	57-131	20	04/20/2010 0130
1,3-Dichlorobenzene	50	52		1	104	6.1	51-134	20	04/20/2010 0130
Dichlorodifluoromethane	50	49		1	99	6.0	10-157	20	04/20/2010 0130
1,1-Dichloroethane	50	48		1	96	7.7	71-127	20	04/20/2010 0130
1,2-Dichloroethane	50	50		1	101	9.4	67-129	20	04/20/2010 0130
trans-1,2-Dichloroethene	50	48		1	95	7.2	68-131	20	04/20/2010 0130
1,1-Dichloroethene	50	47		1	94	3.5	69-138	20	04/20/2010 0130
cis-1,2-Dichloroethene	50	48		1	96	9.2	70-122	20	04/20/2010 0130
1,2-Dichloropropane	50	51		1	102	6.4	72-124	20	04/20/2010 0130
cis-1,3-Dichloropropene	50	53		1	105	7.2	70-126	20	04/20/2010 0130
trans-1,3-Dichloropropene	50	55		1	110	3.8	70-124	20	04/20/2010 0130
Ethylbenzene	50	52		1	103	2.8	59-128	20	04/20/2010 0130
2-Hexanone	100	120		1	122	1.9	54-137	20	04/20/2010 0130
Isopropylbenzene	50	53		1	105	2.5	50-136	20	04/20/2010 0130
Methyl acetate	50	55		1	110	1.0	59-137	20	04/20/2010 0130
Methyl tertiary butyl ether (MTBE)	50	50		1	100	4.9	72-122	20	04/20/2010 0130
4-Methyl-2-pentanone	100	110		1	105	0.035	60-134	20	04/20/2010 0130
Methylcyclohexane	50	48		1	97	2.2	41-144	20	04/20/2010 0130
Methylene chloride	50	47		1	95	8.9	77-129	20	04/20/2010 0130
Styrene	50	53		1	107	3.1	54-136	20	04/20/2010 0130
1,1,2,2-Tetrachloroethane	50	57		1	113	1.5	69-132	20	04/20/2010 0130
Tetrachloroethene	50	52		1	103	0.17	70-130	20	04/20/2010 0130
Toluene	50	50		1	100	4.3	61-129	20	04/20/2010 0130
1,1,2-Trichloro-1,2,2-Trifluoroethane	50	43		1	86	3.3	49-136	20	04/20/2010 0130
1,2,4-Trichlorobenzene	50	53		1	106	12	34-145	20	04/20/2010 0130
1,1,2-Trichloroethane	50	55		1	110	0.63	55-128	20	04/20/2010 0130
1,1,1-Trichloroethane	50	47		1	94	1.0	63-128	20	04/20/2010 0130

PQL = Practical quantitation limit
ND = Not detected at or above the MDL
P = The RPD between two GC columns exceeds 40%
J = Estimated result < PQL and ≥ MDL
N - Recovery is out of criteria
+ - RPD is out of criteria

Where applicable, all soil sample analysis are reported on a dry weight basis unless flagged with a "W"

Note: Calculations are performed before rounding to avoid round-off errors in calculated results

Volatile Organic Compounds by GC/MS - LCSD

Sample ID: LQ31830-003
Batch: 31830
Analytical Method: 8260B

Matrix: Solid
Prep Method: 5035

Parameter	Spike Amount (ug/kg)	Result (ug/kg)	Q	Dil	% Rec	% RPD	% Rec Limit	% RPD Limit	Analysis Date
Trichloroethene	50	49		1	98	4.8	62-126	20	04/20/2010 0130
Trichlorofluoromethane	50	50		1	100	1.2	45-138	20	04/20/2010 0130
Vinyl chloride	50	54		1	107	3.2	42-132	20	04/20/2010 0130
Xylenes (total)	100	110		1	105	1.0	58-128	20	04/20/2010 0130

Surrogate	Q	% Rec	Acceptance Limit
Bromofluorobenzene		93	47-138
1,2-Dichloroethane-d4		82	53-142
Toluene-d8		87	68-124

PQL = Practical quantitation limit
ND = Not detected at or above the MDL
P = The RPD between two GC columns exceeds 40%
J = Estimated result < PQL and ≥ MDL
N - Recovery is out of criteria
+ - RPD is out of criteria

Where applicable, all soil sample analysis are reported on a dry weight basis unless flagged with a "W"

Note: Calculations are performed before rounding to avoid round-off errors in calculated results

Semivolatile Organic Compounds by GC/MS - MB

Sample ID: LQ31258-001
Batch: 31258
Analytical Method: 8270D

Matrix: Aqueous
Prep Method: 3520C
Prep Date: 04/11/2010 1745

Parameter	Result	Q	Dil	PQL	MDL	Units	Analysis Date
1,1'-Biphenyl	ND		1	1.0	0.20	ug/L	04/13/2010 2141
2,4,5-Trichlorophenol	ND		1	1.0	0.18	ug/L	04/13/2010 2141
2,4,6-Trichlorophenol	ND		1	1.0	0.22	ug/L	04/13/2010 2141
2,4-Dichlorophenol	ND		1	1.0	0.15	ug/L	04/13/2010 2141
2,4-Dimethylphenol	ND		1	1.0	0.31	ug/L	04/13/2010 2141
2,4-Dinitrophenol	ND		1	5.0	0.25	ug/L	04/13/2010 2141
2,4-Dinitrotoluene	ND		1	2.0	0.45	ug/L	04/13/2010 2141
2,6-Dinitrotoluene	ND		1	2.0	0.40	ug/L	04/13/2010 2141
2-Chloronaphthalene	ND		1	1.0	0.12	ug/L	04/13/2010 2141
2-Chlorophenol	ND		1	1.0	0.13	ug/L	04/13/2010 2141
2-Methylnaphthalene	ND		1	1.0	0.080	ug/L	04/13/2010 2141
2-Methylphenol	ND		1	1.0	0.17	ug/L	04/13/2010 2141
2-Nitroaniline	ND		1	2.0	0.55	ug/L	04/13/2010 2141
2-Nitrophenol	ND		1	2.0	0.27	ug/L	04/13/2010 2141
3 & 4-Methylphenol	ND		1	2.0	0.57	ug/L	04/13/2010 2141
3,3'-Dichlorobenzidine	ND		1	5.0	0.81	ug/L	04/13/2010 2141
3-Nitroaniline	ND		1	2.0	0.77	ug/L	04/13/2010 2141
4,6-Dinitro-2-methylphenol	ND		1	5.0	1.5	ug/L	04/13/2010 2141
4-Bromophenyl phenyl ether	ND		1	1.0	0.12	ug/L	04/13/2010 2141
4-Chloro-3-methyl phenol	ND		1	1.0	0.22	ug/L	04/13/2010 2141
4-Chloroaniline	ND		1	1.0	0.13	ug/L	04/13/2010 2141
4-Chlorophenyl phenyl ether	ND		1	1.0	0.11	ug/L	04/13/2010 2141
4-Nitroaniline	ND		1	2.0	0.39	ug/L	04/13/2010 2141
4-Nitrophenol	ND		1	5.0	0.64	ug/L	04/13/2010 2141
Acenaphthene	ND		1	1.0	0.090	ug/L	04/13/2010 2141
Acenaphthylene	ND		1	1.0	0.16	ug/L	04/13/2010 2141
Acetophenone	ND		1	1.0	0.32	ug/L	04/13/2010 2141
Anthracene	ND		1	1.0	0.13	ug/L	04/13/2010 2141
Atrazine	ND		1	1.0	0.20	ug/L	04/13/2010 2141
Benzaldehyde	ND		1	5.0	1.0	ug/L	04/13/2010 2141
Benzo(a)anthracene	ND		1	1.0	0.15	ug/L	04/13/2010 2141
Benzo(a)pyrene	ND		1	1.0	0.16	ug/L	04/13/2010 2141
Benzo(b)fluoranthene	ND		1	1.0	0.20	ug/L	04/13/2010 2141
Benzo(g,h,i)perylene	ND		1	1.0	0.23	ug/L	04/13/2010 2141
Benzo(k)fluoranthene	ND		1	1.0	0.12	ug/L	04/13/2010 2141
bis(2-Chloroethoxy)methane	ND		1	1.0	0.13	ug/L	04/13/2010 2141
bis(2-Chloroethyl)ether	ND		1	1.0	0.13	ug/L	04/13/2010 2141
bis(2-Chloroisopropyl)ether	ND		1	1.0	0.080	ug/L	04/13/2010 2141
bis(2-Ethylhexyl)phthalate	ND		1	5.0	1.7	ug/L	04/13/2010 2141
Butyl benzyl phthalate	ND		1	5.0	1.7	ug/L	04/13/2010 2141
Caprolactam	ND		1	5.0	1.2	ug/L	04/13/2010 2141
Carbazole	ND		1	1.0	0.25	ug/L	04/13/2010 2141
Chrysene	ND		1	1.0	0.12	ug/L	04/13/2010 2141
Di-n-butyl phthalate	ND		1	5.0	1.7	ug/L	04/13/2010 2141

PQL = Practical quantitation limit
ND = Not detected at or above the MDL
P = The RPD between two GC columns exceeds 40%
J = Estimated result < PQL and ≥ MDL
N - Recovery is out of criteria
+ - RPD is out of criteria

Where applicable, all soil sample analysis are reported on a dry weight basis unless flagged with a "W"

Note: Calculations are performed before rounding to avoid round-off errors in calculated results

Semivolatile Organic Compounds by GC/MS - MB

Sample ID: LQ31258-001
Batch: 31258
Analytical Method: 8270D

Matrix: Aqueous
Prep Method: 3520C
Prep Date: 04/11/2010 1745

Parameter	Result	Q	Dil	PQL	MDL	Units	Analysis Date
Di-n-octylphthalate	ND		1	5.0	1.7	ug/L	04/13/2010 2141
Dibenzo(a,h)anthracene	ND		1	1.0	0.13	ug/L	04/13/2010 2141
Dibenzofuran	ND		1	1.0	0.16	ug/L	04/13/2010 2141
Diethylphthalate	ND		1	5.0	1.7	ug/L	04/13/2010 2141
Dimethyl phthalate	ND		1	5.0	1.7	ug/L	04/13/2010 2141
Fluoranthene	ND		1	1.0	0.21	ug/L	04/13/2010 2141
Fluorene	ND		1	1.0	0.10	ug/L	04/13/2010 2141
Hexachlorobenzene	ND		1	1.0	0.21	ug/L	04/13/2010 2141
Hexachlorobutadiene	ND		1	1.0	0.090	ug/L	04/13/2010 2141
Hexachlorocyclopentadiene	ND		1	5.0	0.23	ug/L	04/13/2010 2141
Hexachloroethane	ND		1	1.0	0.11	ug/L	04/13/2010 2141
Indeno(1,2,3-c,d)pyrene	ND		1	1.0	0.23	ug/L	04/13/2010 2141
Isophorone	ND		1	1.0	0.080	ug/L	04/13/2010 2141
N-Nitrosodi-n-propylamine	ND		1	1.0	0.080	ug/L	04/13/2010 2141
N-Nitrosodiphenylamine (Diphenylamine)	ND		1	1.0	0.38	ug/L	04/13/2010 2141
Naphthalene	ND		1	1.0	0.070	ug/L	04/13/2010 2141
Nitrobenzene	ND		1	1.0	0.10	ug/L	04/13/2010 2141
Pentachlorophenol	ND		1	5.0	0.54	ug/L	04/13/2010 2141
Phenanthrene	ND		1	1.0	0.18	ug/L	04/13/2010 2141
Phenol	ND		1	1.0	0.11	ug/L	04/13/2010 2141
Pyrene	ND		1	1.0	0.16	ug/L	04/13/2010 2141

Surrogate	Q	% Rec	Acceptance Limit
2,4,6-Tribromophenol		62	41-144
2-Fluorobiphenyl		65	37-129
2-Fluorophenol		63	24-127
Nitrobenzene-d5		67	38-127
Phenol-d5		62	28-128
Terphenyl-d14		52	10-148

PQL = Practical quantitation limit
ND = Not detected at or above the MDL
P = The RPD between two GC columns exceeds 40%
J = Estimated result < PQL and ≥ MDL
N - Recovery is out of criteria
+ - RPD is out of criteria

Where applicable, all soil sample analysis are reported on a dry weight basis unless flagged with a "W"

Note: Calculations are performed before rounding to avoid round-off errors in calculated results

Semivolatile Organic Compounds by GC/MS - LCS

Sample ID: LQ31258-002
Batch: 31258
Analytical Method: 8270D

Matrix: Aqueous
Prep Method: 3520C
Prep Date: 04/11/2010 1745

Parameter	Spike Amount (ug/L)	Result (ug/L)	Q	Dil	% Rec	% Rec Limit	Analysis Date
2,4,5-Trichlorophenol	20	13		1	66	46-125	04/13/2010 2200
2,4,6-Trichlorophenol	20	13		1	65	36-123	04/13/2010 2200
2,4-Dichlorophenol	20	13		1	66	38-127	04/13/2010 2200
2,4-Dimethylphenol	20	13		1	63	36-110	04/13/2010 2200
2,4-Dinitrophenol	100	81		1	81	33-143	04/13/2010 2200
2,4-Dinitrotoluene	40	35		1	87	55-137	04/13/2010 2200
2,6-Dinitrotoluene	40	26		1	64	53-128	04/13/2010 2200
2-Chloronaphthalene	20	13		1	67	42-132	04/13/2010 2200
2-Chlorophenol	20	13		1	63	40-128	04/13/2010 2200
2-Methylnaphthalene	20	13		1	63	49-122	04/13/2010 2200
2-Methylphenol	20	15		1	76	33-122	04/13/2010 2200
2-Nitroaniline	40	26		1	65	48-126	04/13/2010 2200
2-Nitrophenol	40	29		1	72	44-131	04/13/2010 2200
3 & 4-Methylphenol	40	25		1	62	48-112	04/13/2010 2200
3-Nitroaniline	40	19		1	47	29-109	04/13/2010 2200
4,6-Dinitro-2-methylphenol	100	78		1	78	46-151	04/13/2010 2200
4-Bromophenyl phenyl ether	20	13		1	64	49-123	04/13/2010 2200
4-Chloro-3-methyl phenol	20	13		1	63	48-136	04/13/2010 2200
4-Chloroaniline	20	5.0		1	25	18-73	04/13/2010 2200
4-Chlorophenyl phenyl ether	20	12		1	61	34-124	04/13/2010 2200
4-Nitroaniline	40	24		1	59	42-154	04/13/2010 2200
4-Nitrophenol	100	71		1	71	43-145	04/13/2010 2200
Acenaphthene	20	12		1	61	51-130	04/13/2010 2200
Acenaphthylene	20	15		1	77	46-131	04/13/2010 2200
Anthracene	20	12		1	60	48-122	04/13/2010 2200
Benzo(a)anthracene	20	14		1	68	50-143	04/13/2010 2200
Benzo(a)pyrene	20	14		1	69	55-141	04/13/2010 2200
Benzo(b)fluoranthene	20	14		1	70	48-147	04/13/2010 2200
Benzo(g,h,i)perylene	20	13		1	64	48-139	04/13/2010 2200
Benzo(k)fluoranthene	20	11		1	53	48-148	04/13/2010 2200
bis(2-Chloroethoxy)methane	20	12		1	62	46-130	04/13/2010 2200
bis(2-Chloroethyl)ether	20	13		1	63	42-127	04/13/2010 2200
bis(2-Chloroisopropyl)ether	20	12		1	59	36-133	04/13/2010 2200
bis(2-Ethylhexyl)phthalate	20	12		1	60	40-141	04/13/2010 2200
Butyl benzyl phthalate	20	13		1	64	52-142	04/13/2010 2200
Carbazole	20	13		1	66	45-101	04/13/2010 2200
Chrysene	20	11		1	57	51-137	04/13/2010 2200
Di-n-butyl phthalate	20	13		1	64	50-134	04/13/2010 2200
Di-n-octylphthalate	20	12		1	59	50-136	04/13/2010 2200
Dibenzo(a,h)anthracene	20	13		1	64	48-139	04/13/2010 2200
Dibenzofuran	20	12		1	61	45-142	04/13/2010 2200
Diethylphthalate	20	12		1	62	48-124	04/13/2010 2200
Dimethyl phthalate	20	12		1	62	43-122	04/13/2010 2200
Fluoranthene	20	12		1	61	50-124	04/13/2010 2200

PQL = Practical quantitation limit
ND = Not detected at or above the MDL
P = The RPD between two GC columns exceeds 40%
J = Estimated result < PQL and ≥ MDL
N - Recovery is out of criteria
+ - RPD is out of criteria

Where applicable, all soil sample analysis are reported on a dry weight basis unless flagged with a "W"

Note: Calculations are performed before rounding to avoid round-off errors in calculated results

Semivolatile Organic Compounds by GC/MS - LCS

Sample ID: LQ31258-002
Batch: 31258
Analytical Method: 8270D

Matrix: Aqueous
Prep Method: 3520C
Prep Date: 04/11/2010 1745

Parameter	Spike Amount (ug/L)	Result (ug/L)	Q	Dil	% Rec	% Rec Limit	Analysis Date
Fluorene	20	12		1	61	39-122	04/13/2010 2200
Hexachlorobenzene	20	12		1	62	46-125	04/13/2010 2200
Hexachlorobutadiene	20	13		1	65	38-121	04/13/2010 2200
Hexachlorocyclopentadiene	100	55		1	55	24-110	04/13/2010 2200
Hexachloroethane	20	13		1	64	32-109	04/13/2010 2200
Indeno(1,2,3-c,d)pyrene	20	13		1	64	49-146	04/13/2010 2200
Isophorone	20	13		1	64	43-118	04/13/2010 2200
N-Nitrosodi-n-propylamine	20	12		1	62	46-135	04/13/2010 2200
N-Nitrosodiphenylamine (Diphenylamine)	20	13		1	65	44-124	04/13/2010 2200
Naphthalene	20	12		1	61	45-118	04/13/2010 2200
Nitrobenzene	20	14		1	70	46-131	04/13/2010 2200
Pentachlorophenol	100	60		1	60	30-137	04/13/2010 2200
Phenanthrene	20	12		1	60	49-122	04/13/2010 2200
Phenol	20	13		1	63	35-118	04/13/2010 2200
Pyrene	20	12		1	62	50-130	04/13/2010 2200

Surrogate	Q	% Rec	Acceptance Limit
2,4,6-Tribromophenol		65	41-144
2-Fluorobiphenyl		62	37-129
2-Fluorophenol		64	24-127
Nitrobenzene-d5		68	38-127
Phenol-d5		63	28-128
Terphenyl-d14		52	10-148

PQL = Practical quantitation limit
ND = Not detected at or above the MDL
P = The RPD between two GC columns exceeds 40%
J = Estimated result < PQL and ≥ MDL
N - Recovery is out of criteria
+ - RPD is out of criteria

Where applicable, all soil sample analysis are reported on a dry weight basis unless flagged with a "W"

Note: Calculations are performed before rounding to avoid round-off errors in calculated results

Semivolatile Organic Compounds by GC/MS - MB

Sample ID: LQ31326-001
Batch: 31326
Analytical Method: 8270D

Matrix: Aqueous
Prep Method: 3520C
Prep Date: 04/13/2010 21

Parameter	Result	Q	Dil	PQL	MDL	Units	Analysis Date
1,1'-Biphenyl	ND		1	1.0	0.20	ug/L	04/14/2010 0946
2,4,5-Trichlorophenol	ND		1	1.0	0.18	ug/L	04/14/2010 0946
2,4,6-Trichlorophenol	ND		1	1.0	0.22	ug/L	04/14/2010 0946
2,4-Dichlorophenol	ND		1	1.0	0.15	ug/L	04/14/2010 0946
2,4-Dimethylphenol	ND		1	1.0	0.31	ug/L	04/14/2010 0946
2,4-Dinitrophenol	ND		1	5.0	0.25	ug/L	04/14/2010 0946
2,4-Dinitrotoluene	ND		1	2.0	0.45	ug/L	04/14/2010 0946
2,6-Dinitrotoluene	ND		1	2.0	0.40	ug/L	04/14/2010 0946
2-Chloronaphthalene	ND		1	1.0	0.12	ug/L	04/14/2010 0946
2-Chlorophenol	ND		1	1.0	0.13	ug/L	04/14/2010 0946
2-Methylnaphthalene	ND		1	1.0	0.080	ug/L	04/14/2010 0946
2-Methylphenol	ND		1	1.0	0.17	ug/L	04/14/2010 0946
2-Nitroaniline	ND		1	2.0	0.55	ug/L	04/14/2010 0946
2-Nitrophenol	ND		1	2.0	0.27	ug/L	04/14/2010 0946
3 & 4-Methylphenol	ND		1	2.0	0.57	ug/L	04/14/2010 0946
3,3'-Dichlorobenzidine	ND		1	5.0	0.81	ug/L	04/14/2010 0946
3-Nitroaniline	ND		1	2.0	0.77	ug/L	04/14/2010 0946
4,6-Dinitro-2-methylphenol	ND		1	5.0	1.5	ug/L	04/14/2010 0946
4-Bromophenyl phenyl ether	ND		1	1.0	0.12	ug/L	04/14/2010 0946
4-Chloro-3-methyl phenol	ND		1	1.0	0.22	ug/L	04/14/2010 0946
4-Chloroaniline	ND		1	1.0	0.13	ug/L	04/14/2010 0946
4-Chlorophenyl phenyl ether	ND		1	1.0	0.11	ug/L	04/14/2010 0946
4-Nitroaniline	ND		1	2.0	0.39	ug/L	04/14/2010 0946
4-Nitrophenol	ND		1	5.0	0.64	ug/L	04/14/2010 0946
Acenaphthene	ND		1	1.0	0.090	ug/L	04/14/2010 0946
Acenaphthylene	ND		1	1.0	0.16	ug/L	04/14/2010 0946
Acetophenone	ND		1	1.0	0.32	ug/L	04/14/2010 0946
Anthracene	ND		1	1.0	0.13	ug/L	04/14/2010 0946
Atrazine	ND		1	1.0	0.20	ug/L	04/14/2010 0946
Benzaldehyde	ND		1	5.0	1.0	ug/L	04/14/2010 0946
Benzo(a)anthracene	ND		1	1.0	0.15	ug/L	04/14/2010 0946
Benzo(a)pyrene	ND		1	1.0	0.16	ug/L	04/14/2010 0946
Benzo(b)fluoranthene	ND		1	1.0	0.20	ug/L	04/14/2010 0946
Benzo(g,h,i)perylene	ND		1	1.0	0.23	ug/L	04/14/2010 0946
Benzo(k)fluoranthene	ND		1	1.0	0.12	ug/L	04/14/2010 0946
bis(2-Chloroethoxy)methane	ND		1	1.0	0.13	ug/L	04/14/2010 0946
bis(2-Chloroethyl)ether	ND		1	1.0	0.13	ug/L	04/14/2010 0946
bis(2-Chloroisopropyl)ether	ND		1	1.0	0.080	ug/L	04/14/2010 0946
bis(2-Ethylhexyl)phthalate	ND		1	5.0	1.7	ug/L	04/14/2010 0946
Butyl benzyl phthalate	ND		1	5.0	1.7	ug/L	04/14/2010 0946
Caprolactam	ND		1	5.0	1.2	ug/L	04/14/2010 0946
Carbazole	ND		1	1.0	0.25	ug/L	04/14/2010 0946
Chrysene	ND		1	1.0	0.12	ug/L	04/14/2010 0946
Di-n-butyl phthalate	ND		1	5.0	1.7	ug/L	04/14/2010 0946

PQL = Practical quantitation limit
ND = Not detected at or above the MDL
P = The RPD between two GC columns exceeds 40%
J = Estimated result < PQL and ≥ MDL
N - Recovery is out of criteria
+ - RPD is out of criteria

Where applicable, all soil sample analysis are reported on a dry weight basis unless flagged with a "W"

Note: Calculations are performed before rounding to avoid round-off errors in calculated results

Semivolatile Organic Compounds by GC/MS - MB

Sample ID: LQ31326-001
Batch: 31326
Analytical Method: 8270D

Matrix: Aqueous
Prep Method: 3520C
Prep Date: 04/13/2010 21

Parameter	Result	Q	Dil	PQL	MDL	Units	Analysis Date
Di-n-octylphthalate	ND		1	5.0	1.7	ug/L	04/14/2010 0946
Dibenzo(a,h)anthracene	ND		1	1.0	0.13	ug/L	04/14/2010 0946
Dibenzofuran	ND		1	1.0	0.16	ug/L	04/14/2010 0946
Diethylphthalate	ND		1	5.0	1.7	ug/L	04/14/2010 0946
Dimethyl phthalate	ND		1	5.0	1.7	ug/L	04/14/2010 0946
Fluoranthene	ND		1	1.0	0.21	ug/L	04/14/2010 0946
Fluorene	ND		1	1.0	0.10	ug/L	04/14/2010 0946
Hexachlorobenzene	ND		1	1.0	0.21	ug/L	04/14/2010 0946
Hexachlorobutadiene	ND		1	1.0	0.090	ug/L	04/14/2010 0946
Hexachlorocyclopentadiene	ND		1	5.0	0.23	ug/L	04/14/2010 0946
Hexachloroethane	ND		1	1.0	0.11	ug/L	04/14/2010 0946
Indeno(1,2,3-c,d)pyrene	ND		1	1.0	0.23	ug/L	04/14/2010 0946
Isophorone	ND		1	1.0	0.080	ug/L	04/14/2010 0946
N-Nitrosodi-n-propylamine	ND		1	1.0	0.080	ug/L	04/14/2010 0946
N-Nitrosodiphenylamine (Diphenylamine)	ND		1	1.0	0.38	ug/L	04/14/2010 0946
Naphthalene	ND		1	1.0	0.070	ug/L	04/14/2010 0946
Nitrobenzene	ND		1	1.0	0.10	ug/L	04/14/2010 0946
Pentachlorophenol	ND		1	5.0	0.54	ug/L	04/14/2010 0946
Phenanthrene	ND		1	1.0	0.18	ug/L	04/14/2010 0946
Phenol	ND		1	1.0	0.11	ug/L	04/14/2010 0946
Pyrene	ND		1	1.0	0.16	ug/L	04/14/2010 0946

Surrogate	Q	% Rec	Acceptance Limit
2,4,6-Tribromophenol		49	41-144
2-Fluorobiphenyl		51	37-129
2-Fluorophenol		54	24-127
Nitrobenzene-d5		74	38-127
Phenol-d5		55	28-128
Terphenyl-d14		40	10-148

PQL = Practical quantitation limit
ND = Not detected at or above the MDL
P = The RPD between two GC columns exceeds 40%
J = Estimated result < PQL and ≥ MDL
N - Recovery is out of criteria
+ - RPD is out of criteria

Where applicable, all soil sample analysis are reported on a dry weight basis unless flagged with a "W"

Note: Calculations are performed before rounding to avoid round-off errors in calculated results

Semivolatile Organic Compounds by GC/MS - LCS

Sample ID: LQ31326-002
Batch: 31326
Analytical Method: 8270D

Matrix: Aqueous
Prep Method: 3520C
Prep Date: 04/13/2010 21

Parameter	Spike Amount (ug/L)	Result (ug/L)	Q	Dil	% Rec	% Rec Limit	Analysis Date
2,4,5-Trichlorophenol	20	9.8		1	49	46-125	04/14/2010 1005
2,4,6-Trichlorophenol	20	9.6		1	48	36-123	04/14/2010 1005
2,4-Dichlorophenol	20	10		1	52	38-127	04/14/2010 1005
2,4-Dimethylphenol	20	9.3		1	47	36-110	04/14/2010 1005
2,4-Dinitrophenol	100	82		1	82	33-143	04/14/2010 1005
2,4-Dinitrotoluene	40	24		1	60	55-137	04/14/2010 1005
2,6-Dinitrotoluene	40	24		1	59	53-128	04/14/2010 1005
2-Chloronaphthalene	20	8.6		1	43	42-132	04/14/2010 1005
2-Chlorophenol	20	10		1	52	40-128	04/14/2010 1005
2-Methylnaphthalene	20	10		1	51	49-122	04/14/2010 1005
2-Methylphenol	20	12		1	59	33-122	04/14/2010 1005
2-Nitroaniline	40	21		1	53	48-126	04/14/2010 1005
2-Nitrophenol	40	25		1	63	44-131	04/14/2010 1005
3 & 4-Methylphenol	40	21		1	53	48-112	04/14/2010 1005
3-Nitroaniline	40	20		1	50	29-109	04/14/2010 1005
4,6-Dinitro-2-methylphenol	100	77		1	77	46-151	04/14/2010 1005
4-Bromophenyl phenyl ether	20	9.4	N	1	47	49-123	04/14/2010 1005
4-Chloro-3-methyl phenol	20	12		1	59	48-136	04/14/2010 1005
4-Chloroaniline	20	4.1		1	20	18-73	04/14/2010 1005
4-Chlorophenyl phenyl ether	20	9.8		1	49	34-124	04/14/2010 1005
4-Nitroaniline	40	23		1	57	42-154	04/14/2010 1005
4-Nitrophenol	100	66		1	66	43-145	04/14/2010 1005
Acenaphthene	20	9.7	N	1	49	51-130	04/14/2010 1005
Acenaphthylene	20	11		1	57	46-131	04/14/2010 1005
Anthracene	20	9.1	N	1	46	48-122	04/14/2010 1005
Benzo(a)anthracene	20	9.1	N	1	46	50-143	04/14/2010 1005
Benzo(a)pyrene	20	11	N	1	53	55-141	04/14/2010 1005
Benzo(b)fluoranthene	20	9.5	N	1	47	48-147	04/14/2010 1005
Benzo(g,h,i)perylene	20	7.5	N	1	37	48-139	04/14/2010 1005
Benzo(k)fluoranthene	20	10		1	50	48-148	04/14/2010 1005
bis(2-Chloroethoxy)methane	20	9.4		1	47	46-130	04/14/2010 1005
bis(2-Chloroethyl)ether	20	9.9		1	50	42-127	04/14/2010 1005
bis(2-Chloroisopropyl)ether	20	8.9		1	45	36-133	04/14/2010 1005
bis(2-Ethylhexyl)phthalate	20	9.0		1	45	40-141	04/14/2010 1005
Butyl benzyl phthalate	20	9.6	N	1	48	52-142	04/14/2010 1005
Carbazole	20	9.8		1	49	45-101	04/14/2010 1005
Chrysene	20	9.1	N	1	45	51-137	04/14/2010 1005
Di-n-butyl phthalate	20	10		1	51	50-134	04/14/2010 1005
Di-n-octylphthalate	20	10		1	51	50-136	04/14/2010 1005
Dibenzo(a,h)anthracene	20	8.8	N	1	44	48-139	04/14/2010 1005
Dibenzofuran	20	9.5		1	47	45-142	04/14/2010 1005
Diethylphthalate	20	11		1	54	48-124	04/14/2010 1005
Dimethyl phthalate	20	10		1	50	43-122	04/14/2010 1005
Fluoranthene	20	9.5	N	1	47	50-124	04/14/2010 1005

PQL = Practical quantitation limit
P = The RPD between two GC columns exceeds 40%
N - Recovery is out of criteria
ND = Not detected at or above the MDL
J = Estimated result < PQL and ≥ MDL
+ - RPD is out of criteria
Where applicable, all soil sample analysis are reported on a dry weight basis unless flagged with a "W"

Note: Calculations are performed before rounding to avoid round-off errors in calculated results

Semivolatile Organic Compounds by GC/MS - LCS

Sample ID: LQ31326-002
Batch: 31326
Analytical Method: 8270D

Matrix: Aqueous
Prep Method: 3520C
Prep Date: 04/13/2010 21

Parameter	Spike Amount (ug/L)	Result (ug/L)	Q	Dil	% Rec	% Rec Limit	Analysis Date
Fluorene	20	9.8		1	49	39-122	04/14/2010 1005
Hexachlorobenzene	20	9.4		1	47	46-125	04/14/2010 1005
Hexachlorobutadiene	20	10		1	52	38-121	04/14/2010 1005
Hexachlorocyclopentadiene	100	38		1	38	24-110	04/14/2010 1005
Hexachloroethane	20	10		1	52	32-109	04/14/2010 1005
Indeno(1,2,3-c,d)pyrene	20	8.9	N	1	45	49-146	04/14/2010 1005
Isophorone	20	10		1	52	43-118	04/14/2010 1005
N-Nitrosodi-n-propylamine	20	11		1	55	46-135	04/14/2010 1005
N-Nitrosodiphenylamine (Diphenylamine)	20	9.6		1	48	44-124	04/14/2010 1005
Naphthalene	20	9.4		1	47	45-118	04/14/2010 1005
Nitrobenzene	20	14		1	69	46-131	04/14/2010 1005
Pentachlorophenol	100	52		1	52	30-137	04/14/2010 1005
Phenanthrene	20	9.4	N	1	47	49-122	04/14/2010 1005
Phenol	20	9.7		1	49	35-118	04/14/2010 1005
Pyrene	20	8.8	N	1	44	50-130	04/14/2010 1005

Surrogate	Q	% Rec	Acceptance Limit
2,4,6-Tribromophenol		50	41-144
2-Fluorobiphenyl		45	37-129
2-Fluorophenol		45	24-127
Nitrobenzene-d5		68	38-127
Phenol-d5		48	28-128
Terphenyl-d14		36	10-148

PQL = Practical quantitation limit
ND = Not detected at or above the MDL
P = The RPD between two GC columns exceeds 40%
J = Estimated result < PQL and ≥ MDL
N - Recovery is out of criteria
+ - RPD is out of criteria

Where applicable, all soil sample analysis are reported on a dry weight basis unless flagged with a "W"

Note: Calculations are performed before rounding to avoid round-off errors in calculated results

Semivolatile Organic Compounds by GC/MS - MS

Sample ID: LD09018-019MS
Batch: 31326
Analytical Method: 8270D

Matrix: Aqueous
Prep Method: 3520C
Prep Date: 04/13/2010 21

Parameter	Sample Amount (ug/L)	Spike Amount (ug/L)	Result (ug/L)	Q	Dil	% Rec	% Rec Limit	Analysis Date
Acenaphthene	ND	40	31		1	78	10-133	04/14/2010 1629
Acenaphthylene	ND	40	28		1	69	34-128	04/14/2010 1629
Anthracene	ND	40	31		1	78	48-122	04/14/2010 1629
Benzo(a)anthracene	ND	40	32		1	80	53-98	04/14/2010 1629
Benzo(a)pyrene	ND	40	78	N	1	196	11-160	04/14/2010 1629
Benzo(b)fluoranthene	ND	40	97	N	1	242	10-165	04/14/2010 1629
Benzo(g,h,i)perylene	ND	40	61	N	1	153	42-111	04/14/2010 1629
Benzo(k)fluoranthene	ND	40	100	N	1	257	13-175	04/14/2010 1629
4-Bromophenyl phenyl ether	ND	40	33		1	84	49-123	04/14/2010 1629
Butyl benzyl phthalate	ND	40	30		1	74	52-142	04/14/2010 1629
Carbazole	ND	40	6.9	N	1	17	45-101	04/14/2010 1629
4-Chloro-3-methyl phenol	ND	40	33		1	84	40-98	04/14/2010 1629
4-Chloroaniline	ND	40	2.6	N	1	6.4	10-98	04/14/2010 1629
bis(2-Chloroethoxy)methane	ND	40	11	N	1	28	43-93	04/14/2010 1629
bis(2-Chloroethyl)ether	ND	40	30		1	75	41-88	04/14/2010 1629
bis(2-Chloroisopropyl)ether	ND	40	29		1	71	36-99	04/14/2010 1629
2-Chloronaphthalene	ND	40	31		1	78	40-89	04/14/2010 1629
2-Chlorophenol	ND	40	30		1	76	33-92	04/14/2010 1629
4-Chlorophenyl phenyl ether	ND	40	33		1	84	34-124	04/14/2010 1629
Chrysene	ND	40	36		1	89	51-107	04/14/2010 1629
Dibenzo(a,h)anthracene	ND	40	90	N	1	226	47-116	04/14/2010 1629
Dibenzofuran	ND	40	32		1	80	45-94	04/14/2010 1629
2,4-Dichlorophenol	ND	40	31		1	78	34-105	04/14/2010 1629
Diethylphthalate	ND	40	33		1	84	48-124	04/14/2010 1629
Dimethyl phthalate	ND	40	34		1	85	43-122	04/14/2010 1629
2,4-Dimethylphenol	ND	40	30		1	76	33-77	04/14/2010 1629
Di-n-butyl phthalate	ND	40	35		1	87	50-134	04/14/2010 1629
4,6-Dinitro-2-methylphenol	ND	200	260	N	1	129	33-118	04/14/2010 1629
2,4-Dinitrophenol	ND	200	290	N	1	144	19-119	04/14/2010 1629
2,4-Dinitrotoluene	ND	80	78		1	98	50-104	04/14/2010 1629
2,6-Dinitrotoluene	ND	80	78		1	98	53-128	04/14/2010 1629
Di-n-octylphthalate	ND	40	96	N	1	239	40-112	04/14/2010 1629
bis(2-Ethylhexyl)phthalate	ND	40	32		1	79	10-142	04/14/2010 1629
Fluoranthene	ND	40	33		1	84	50-124	04/14/2010 1629
Fluorene	ND	40	34		1	84	39-122	04/14/2010 1629
Hexachlorobenzene	ND	40	32		1	81	46-125	04/14/2010 1629
Hexachlorobutadiene	ND	40	27		1	68	42-94	04/14/2010 1629
Hexachlorocyclopentadiene	ND	200	110		1	56	14-89	04/14/2010 1629
Hexachloroethane	ND	40	29		1	71	39-86	04/14/2010 1629
Indeno(1,2,3-c,d)pyrene	ND	40	79	N	1	197	43-113	04/14/2010 1629
Isophorone	ND	40	32		1	80	42-84	04/14/2010 1629
2-Methylnaphthalene	ND	40	31		1	77	46-90	04/14/2010 1629
2-Methylphenol	ND	40	32		1	81	33-122	04/14/2010 1629
3 & 4-Methylphenol	ND	80	61		1	76	24-97	04/14/2010 1629

PQL = Practical quantitation limit
ND = Not detected at or above the MDL
P = The RPD between two GC columns exceeds 40%
J = Estimated result < PQL and ≥ MDL
N - Recovery is out of criteria
+ - RPD is out of criteria

Where applicable, all soil sample analysis are reported on a dry weight basis unless flagged with a "W"

Note: Calculations are performed before rounding to avoid round-off errors in calculated results

Semivolatile Organic Compounds by GC/MS - MS

Sample ID: LD09018-019MS
Batch: 31326
Analytical Method: 8270D

Matrix: Aqueous
Prep Method: 3520C
Prep Date: 04/13/2010 21

Parameter	Sample Amount (ug/L)	Spike Amount (ug/L)	Result (ug/L)	Q	Dil	% Rec	% Rec Limit	Analysis Date
Naphthalene	ND	40	29		1	72	46-89	04/14/2010 1629
2-Nitroaniline	ND	80	63		1	78	48-126	04/14/2010 1629
3-Nitroaniline	ND	80	2.5	N	1	3.1	10-110	04/14/2010 1629
4-Nitroaniline	ND	80	21	N	1	26	41-99	04/14/2010 1629
Nitrobenzene	ND	40	36		1	91	44-91	04/14/2010 1629
2-Nitrophenol	ND	80	79		1	99	34-102	04/14/2010 1629
4-Nitrophenol	ND	200	170		1	86	29-122	04/14/2010 1629
N-Nitrosodi-n-propylamine	ND	40	34		1	84	41-96	04/14/2010 1629
N-Nitrosodiphenylamine (Diphenylamine)	ND	40	11		1	28	10-150	04/14/2010 1629
Pentachlorophenol	ND	200	160		1	81	32-110	04/14/2010 1629
Phenanthrene	ND	40	33		1	83	49-122	04/14/2010 1629
Phenol	ND	40	30		1	75	33-92	04/14/2010 1629
Pyrene	ND	40	31		1	78	50-130	04/14/2010 1629
2,4,5-Trichlorophenol	ND	40	35		1	87	46-125	04/14/2010 1629
2,4,6-Trichlorophenol	ND	40	33		1	82	36-123	04/14/2010 1629

Surrogate	Q	% Rec	Acceptance Limit
2-Fluorobiphenyl		76	37-129
2-Fluorophenol		66	24-127
Nitrobenzene-d5		90	38-127
Phenol-d5		70	28-128
Terphenyl-d14		70	10-148
2,4,6-Tribromophenol		89	41-144

PQL = Practical quantitation limit
ND = Not detected at or above the MDL
P = The RPD between two GC columns exceeds 40%
J = Estimated result < PQL and ≥ MDL
N - Recovery is out of criteria
+ - RPD is out of criteria

Where applicable, all soil sample analysis are reported on a dry weight basis unless flagged with a "W"

Note: Calculations are performed before rounding to avoid round-off errors in calculated results

Semivolatile Organic Compounds by GC/MS - MSD

Sample ID: LD09018-019MD
Batch: 31326
Analytical Method: 8270D

Matrix: Aqueous
Prep Method: 3520C
Prep Date: 04/13/2010 21

Parameter	Sample Amount (ug/L)	Spike Amount (ug/L)	Result (ug/L)	Q	Dil	% Rec	% RPD	% Rec Limit	% RPD Limit	Analysis Date
Acenaphthene	ND	40	28		1	70	11	10-133	40	04/14/2010 2009
Acenaphthylene	ND	40	34		1	84	20	34-128	40	04/14/2010 2009
Anthracene	ND	40	32		1	80	2.0	48-122	40	04/14/2010 2009
Benzo(a)anthracene	ND	40	37		1	91	13	53-98	40	04/14/2010 2009
Benzo(a)pyrene	ND	40	39	+	1	98	67	11-160	40	04/14/2010 2009
Benzo(b)fluoranthene	ND	40	41	+	1	102	81	10-165	40	04/14/2010 2009
Benzo(g,h,i)perylene	ND	40	35	+	1	87	56	42-111	40	04/14/2010 2009
Benzo(k)fluoranthene	ND	40	37	+	1	93	94	13-175	40	04/14/2010 2009
4-Bromophenyl phenyl ether	ND	40	35		1	87	4.0	49-123	40	04/14/2010 2009
Butyl benzyl phthalate	ND	40	42		1	105	34	52-142	40	04/14/2010 2009
Carbazole	ND	40	35	+	1	87	130	45-101	40	04/14/2010 2009
4-Chloro-3-methyl phenol	ND	40	31		1	76	9.0	40-98	40	04/14/2010 2009
4-Chloroaniline	ND	40	6.1	+	1	15	81	10-98	40	04/14/2010 2009
bis(2-Chloroethoxy)methane	ND	40	25	+	1	63	77	43-93	40	04/14/2010 2009
bis(2-Chloroethyl)ether	ND	40	20		1	50	39	41-88	40	04/14/2010 2009
bis(2-Chloroisopropyl)ether	ND	40	20		1	49	37	36-99	40	04/14/2010 2009
2-Chloronaphthalene	ND	40	25		1	62	23	40-89	40	04/14/2010 2009
2-Chlorophenol	ND	40	19	+	1	48	44	33-92	40	04/14/2010 2009
4-Chlorophenyl phenyl ether	ND	40	32		1	80	4.8	34-124	40	04/14/2010 2009
Chrysene	ND	40	38		1	95	6.7	51-107	40	04/14/2010 2009
Dibenzo(a,h)anthracene	ND	40	31	+	1	78	97	47-116	40	04/14/2010 2009
Dibenzofuran	ND	40	28		1	71	12	45-94	40	04/14/2010 2009
2,4-Dichlorophenol	ND	40	26		1	65	19	34-105	40	04/14/2010 2009
Diethylphthalate	ND	40	35		1	89	5.8	48-124	40	04/14/2010 2009
Dimethyl phthalate	ND	40	34		1	85	0.59	43-122	40	04/14/2010 2009
2,4-Dimethylphenol	ND	40	25		1	64	18	33-77	40	04/14/2010 2009
Di-n-butyl phthalate	ND	40	39		1	98	12	50-134	40	04/14/2010 2009
4,6-Dinitro-2-methylphenol	ND	200	240	N	1	122	6.3	33-118	40	04/14/2010 2009
2,4-Dinitrophenol	ND	200	260	N	1	128	12	19-119	40	04/14/2010 2009
2,4-Dinitrotoluene	ND	80	100	N	1	125	24	50-104	40	04/14/2010 2009
2,6-Dinitrotoluene	ND	80	73		1	91	6.7	53-128	40	04/14/2010 2009
Di-n-octylphthalate	ND	40	43	+	1	108	76	40-112	40	04/14/2010 2009
bis(2-Ethylhexyl)phthalate	ND	40	40		1	100	23	10-142	40	04/14/2010 2009
Fluoranthene	ND	40	35		1	88	4.8	50-124	40	04/14/2010 2009
Fluorene	ND	40	30		1	75	11	39-122	40	04/14/2010 2009
Hexachlorobenzene	ND	40	33		1	83	2.2	46-125	40	04/14/2010 2009
Hexachlorobutadiene	ND	40	23		1	56	18	42-94	40	04/14/2010 2009
Hexachlorocyclopentadiene	ND	200	94		1	47	19	14-89	40	04/14/2010 2009
Hexachloroethane	ND	40	19	+	1	47	42	39-86	40	04/14/2010 2009
Indeno(1,2,3-c,d)pyrene	ND	40	33	+	1	83	82	43-113	40	04/14/2010 2009
Isophorone	ND	40	27		1	69	15	42-84	40	04/14/2010 2009
2-Methylnaphthalene	ND	40	24		1	60	25	46-90	40	04/14/2010 2009
2-Methylphenol	ND	40	23		1	57	34	33-122	40	04/14/2010 2009
3 & 4-Methylphenol	ND	80	42		1	52	37	24-97	40	04/14/2010 2009

PQL = Practical quantitation limit
ND = Not detected at or above the MDL
P = The RPD between two GC columns exceeds 40%
J = Estimated result < PQL and ≥ MDL
N - Recovery is out of criteria
+ - RPD is out of criteria

Where applicable, all soil sample analysis are reported on a dry weight basis unless flagged with a "W"

Note: Calculations are performed before rounding to avoid round-off errors in calculated results

Semivolatile Organic Compounds by GC/MS - MSD

Sample ID: LD09018-019MD
Batch: 31326
Analytical Method: 8270D

Matrix: Aqueous
Prep Method: 3520C
Prep Date: 04/13/2010 21

Parameter	Sample Amount (ug/L)	Spike Amount (ug/L)	Result (ug/L)	Q	Dil	% Rec	% RPD	% Rec Limit	% RPD Limit	Analysis Date
Naphthalene	ND	40	22		1	55	26	46-89	40	04/14/2010 2009
2-Nitroaniline	ND	80	69		1	86	9.9	48-126	40	04/14/2010 2009
3-Nitroaniline	ND	80	53	+	1	66	180	10-110	40	04/14/2010 2009
4-Nitroaniline	ND	80	64	+	1	80	100	41-99	40	04/14/2010 2009
Nitrobenzene	ND	40	23	+	1	58	44	44-91	40	04/14/2010 2009
2-Nitrophenol	ND	80	61		1	76	27	34-102	40	04/14/2010 2009
4-Nitrophenol	ND	200	160		1	80	7.9	29-122	40	04/14/2010 2009
N-Nitrosodi-n-propylamine	ND	40	22	+	1	55	41	41-96	40	04/14/2010 2009
N-Nitrosodiphenylamine (Diphenylamine)	ND	40	34	+	1	84	99	10-150	40	04/14/2010 2009
Pentachlorophenol	ND	200	180		1	91	11	32-110	40	04/14/2010 2009
Phenanthrene	ND	40	34		1	85	1.2	49-122	40	04/14/2010 2009
Phenol	ND	40	16	+	1	40	61	33-92	40	04/14/2010 2009
Pyrene	ND	40	38		1	95	20	50-130	40	04/14/2010 2009
2,4,5-Trichlorophenol	ND	40	32		1	81	7.2	46-125	40	04/14/2010 2009
2,4,6-Trichlorophenol	ND	40	30		1	75	9.1	36-123	40	04/14/2010 2009

Surrogate	Q	% Rec	Acceptance Limit
2-Fluorobiphenyl		66	37-129
2-Fluorophenol		36	24-127
Nitrobenzene-d5		57	38-127
Phenol-d5		37	28-128
Terphenyl-d14		82	10-148
2,4,6-Tribromophenol		97	41-144

PQL = Practical quantitation limit
ND = Not detected at or above the MDL
P = The RPD between two GC columns exceeds 40%
J = Estimated result < PQL and ≥ MDL
N - Recovery is out of criteria
+ - RPD is out of criteria

Where applicable, all soil sample analysis are reported on a dry weight basis unless flagged with a "W"

Note: Calculations are performed before rounding to avoid round-off errors in calculated results

Semivolatile Organic Compounds by GC/MS - MB

Sample ID: LQ31355-001
Batch: 31355
Analytical Method: 8270D

Matrix: Solid
Prep Method: 3550C
Prep Date: 04/13/2010 0

Parameter	Result	Q	Dil	PQL	MDL	Units	Analysis Date
1,1'-Biphenyl	ND		1	67	10	ug/kg	04/14/2010 1950
2,4,5-Trichlorophenol	ND		1	67	9.3	ug/kg	04/14/2010 1950
2,4,6-Trichlorophenol	ND		1	67	9.8	ug/kg	04/14/2010 1950
2,4-Dichlorophenol	ND		1	67	10	ug/kg	04/14/2010 1950
2,4-Dimethylphenol	ND		1	67	12	ug/kg	04/14/2010 1950
2,4-Dinitrophenol	ND		1	330	110	ug/kg	04/14/2010 1950
2,4-Dinitrotoluene	ND		1	130	18	ug/kg	04/14/2010 1950
2,6-Dinitrotoluene	ND		1	130	17	ug/kg	04/14/2010 1950
2-Chloronaphthalene	ND		1	67	11	ug/kg	04/14/2010 1950
2-Chlorophenol	ND		1	67	9.2	ug/kg	04/14/2010 1950
2-Methylnaphthalene	ND		1	67	9.9	ug/kg	04/14/2010 1950
2-Methylphenol	ND		1	67	6.0	ug/kg	04/14/2010 1950
2-Nitroaniline	ND		1	130	23	ug/kg	04/14/2010 1950
2-Nitrophenol	ND		1	130	18	ug/kg	04/14/2010 1950
3 & 4-Methylphenol	ND		1	130	12	ug/kg	04/14/2010 1950
3,3'-Dichlorobenzidine	ND		1	330	36	ug/kg	04/14/2010 1950
3-Nitroaniline	ND		1	130	39	ug/kg	04/14/2010 1950
4,6-Dinitro-2-methylphenol	ND		1	330	130	ug/kg	04/14/2010 1950
4-Bromophenyl phenyl ether	ND		1	67	9.8	ug/kg	04/14/2010 1950
4-Chloro-3-methyl phenol	ND		1	67	8.4	ug/kg	04/14/2010 1950
4-Chloroaniline	ND		1	67	6.8	ug/kg	04/14/2010 1950
4-Chlorophenyl phenyl ether	ND		1	67	11	ug/kg	04/14/2010 1950
4-Nitroaniline	ND		1	130	19	ug/kg	04/14/2010 1950
4-Nitrophenol	ND		1	330	96	ug/kg	04/14/2010 1950
Acenaphthene	ND		1	67	11	ug/kg	04/14/2010 1950
Acenaphthylene	ND		1	67	10	ug/kg	04/14/2010 1950
Acetophenone	150		1	67	18	ug/kg	04/14/2010 1950
Anthracene	ND		1	67	7.4	ug/kg	04/14/2010 1950
Atrazine	ND		1	67	17	ug/kg	04/14/2010 1950
Benzaldehyde	ND		1	67	17	ug/kg	04/14/2010 1950
Benzo(a)anthracene	ND		1	67	8.8	ug/kg	04/14/2010 1950
Benzo(a)pyrene	ND		1	67	9.3	ug/kg	04/14/2010 1950
Benzo(b)fluoranthene	ND		1	67	9.6	ug/kg	04/14/2010 1950
Benzo(g,h,i)perylene	ND		1	67	12	ug/kg	04/14/2010 1950
Benzo(k)fluoranthene	ND		1	67	9.5	ug/kg	04/14/2010 1950
bis(2-Chloroethoxy)methane	ND		1	67	10	ug/kg	04/14/2010 1950
bis(2-Chloroethyl)ether	ND		1	67	9.2	ug/kg	04/14/2010 1950
bis(2-Chloroisopropyl)ether	ND		1	67	11	ug/kg	04/14/2010 1950
bis(2-Ethylhexyl)phthalate	ND		1	67	22	ug/kg	04/14/2010 1950
Butyl benzyl phthalate	ND		1	130	44	ug/kg	04/14/2010 1950
Caprolactam	ND		1	67	17	ug/kg	04/14/2010 1950
Carbazole	ND		1	67	14	ug/kg	04/14/2010 1950
Chrysene	ND		1	67	11	ug/kg	04/14/2010 1950
Di-n-butyl phthalate	ND		1	67	22	ug/kg	04/14/2010 1950

PQL = Practical quantitation limit
ND = Not detected at or above the MDL
P = The RPD between two GC columns exceeds 40%
J = Estimated result < PQL and ≥ MDL
N - Recovery is out of criteria
+ - RPD is out of criteria

Where applicable, all soil sample analysis are reported on a dry weight basis unless flagged with a "W"

Note: Calculations are performed before rounding to avoid round-off errors in calculated results

Semivolatile Organic Compounds by GC/MS - MB

Sample ID: LQ31355-001
Batch: 31355
Analytical Method: 8270D

Matrix: Solid
Prep Method: 3550C
Prep Date: 04/13/2010 0

Parameter	Result	Q	Dil	PQL	MDL	Units	Analysis Date
Di-n-octylphthalate	ND		1	67	32	ug/kg	04/14/2010 1950
Dibenzo(a,h)anthracene	ND		1	67	9.1	ug/kg	04/14/2010 1950
Dibenzofuran	ND		1	67	10	ug/kg	04/14/2010 1950
Diethylphthalate	ND		1	67	22	ug/kg	04/14/2010 1950
Dimethyl phthalate	ND		1	67	22	ug/kg	04/14/2010 1950
Fluoranthene	ND		1	67	11	ug/kg	04/14/2010 1950
Fluorene	ND		1	67	9.0	ug/kg	04/14/2010 1950
Hexachlorobenzene	ND		1	67	15	ug/kg	04/14/2010 1950
Hexachlorobutadiene	ND		1	67	11	ug/kg	04/14/2010 1950
Hexachlorocyclopentadiene	ND		1	330	25	ug/kg	04/14/2010 1950
Hexachloroethane	ND		1	67	8.9	ug/kg	04/14/2010 1950
Indeno(1,2,3-c,d)pyrene	ND		1	67	9.7	ug/kg	04/14/2010 1950
Isophorone	ND		1	67	7.4	ug/kg	04/14/2010 1950
N-Nitrosodi-n-propylamine	ND		1	67	13	ug/kg	04/14/2010 1950
N-Nitrosodiphenylamine (Diphenylamine)	ND		1	67	8.3	ug/kg	04/14/2010 1950
Naphthalene	ND		1	67	10	ug/kg	04/14/2010 1950
Nitrobenzene	ND		1	67	5.4	ug/kg	04/14/2010 1950
Pentachlorophenol	ND		1	330	140	ug/kg	04/14/2010 1950
Phenanthrene	ND		1	67	9.0	ug/kg	04/14/2010 1950
Phenol	ND		1	67	9.1	ug/kg	04/14/2010 1950
Pyrene	ND		1	67	13	ug/kg	04/14/2010 1950

Surrogate	Q	% Rec	Acceptance Limit
2,4,6-Tribromophenol		56	30-117
2-Fluorobiphenyl		50	33-102
2-Fluorophenol		51	28-104
Nitrobenzene-d5		49	22-109
Phenol-d5		55	27-103
Terphenyl-d14		82	41-120

PQL = Practical quantitation limit
ND = Not detected at or above the MDL
P = The RPD between two GC columns exceeds 40%
J = Estimated result < PQL and ≥ MDL
N - Recovery is out of criteria
+ - RPD is out of criteria

Where applicable, all soil sample analysis are reported on a dry weight basis unless flagged with a "W"

Note: Calculations are performed before rounding to avoid round-off errors in calculated results

Semivolatile Organic Compounds by GC/MS - LCS

Sample ID: LQ31355-002
Batch: 31355
Analytical Method: 8270D

Matrix: Solid
Prep Method: 3550C
Prep Date: 04/13/2010 0

Parameter	Spike Amount (ug/kg)	Result (ug/kg)	Q	Dil	% Rec	% Rec Limit	Analysis Date
2,4,5-Trichlorophenol	1300	960		1	72	30-130	04/15/2010 0505
2,4,6-Trichlorophenol	1300	940		1	70	30-130	04/15/2010 0505
2,4-Dichlorophenol	1300	850		1	64	30-130	04/15/2010 0505
2,4-Dimethylphenol	1300	840		1	63	30-130	04/15/2010 0505
2,4-Dinitrophenol	6700	6800		1	102	30-130	04/15/2010 0505
2,4-Dinitrotoluene	2700	2900		1	110	30-130	04/15/2010 0505
2,6-Dinitrotoluene	2700	2200		1	83	30-130	04/15/2010 0505
2-Chloronaphthalene	1300	840		1	63	30-130	04/15/2010 0505
2-Chlorophenol	1300	750		1	56	30-130	04/15/2010 0505
2-Methylnaphthalene	1300	770		1	58	30-130	04/15/2010 0505
2-Methylphenol	1300	770		1	58	30-130	04/15/2010 0505
2-Nitroaniline	2700	2100		1	79	30-130	04/15/2010 0505
2-Nitrophenol	2700	2000		1	76	30-130	04/15/2010 0505
3 & 4-Methylphenol	2700	1400		1	54	30-130	04/15/2010 0505
3-Nitroaniline	2700	1900		1	71	30-130	04/15/2010 0505
4,6-Dinitro-2-methylphenol	6700	6600		1	98	30-130	04/15/2010 0505
4-Bromophenyl phenyl ether	1300	960		1	72	30-130	04/15/2010 0505
4-Chloro-3-methyl phenol	1300	880		1	66	30-130	04/15/2010 0505
4-Chloroaniline	1300	450		1	34	10-130	04/15/2010 0505
4-Chlorophenyl phenyl ether	1300	930		1	70	30-130	04/15/2010 0505
4-Nitroaniline	2700	1900		1	70	30-130	04/15/2010 0505
4-Nitrophenol	6700	4400		1	66	30-130	04/15/2010 0505
Acenaphthene	1300	870		1	66	30-130	04/15/2010 0505
Acenaphthylene	1300	1100		1	82	30-130	04/15/2010 0505
Anthracene	1300	920		1	69	30-130	04/15/2010 0505
Benzo(a)anthracene	1300	960		1	72	30-130	04/15/2010 0505
Benzo(a)pyrene	1300	1100		1	83	30-130	04/15/2010 0505
Benzo(b)fluoranthene	1300	1000		1	76	30-130	04/15/2010 0505
Benzo(g,h,i)perylene	1300	850		1	64	30-130	04/15/2010 0505
Benzo(k)fluoranthene	1300	920		1	69	30-130	04/15/2010 0505
bis(2-Chloroethoxy)methane	1300	780		1	59	30-130	04/15/2010 0505
bis(2-Chloroethyl)ether	1300	680		1	51	30-130	04/15/2010 0505
bis(2-Chloroisopropyl)ether	1300	660		1	49	30-130	04/15/2010 0505
bis(2-Ethylhexyl)phthalate	1300	1000		1	76	30-130	04/15/2010 0505
Butyl benzyl phthalate	1300	1000		1	76	30-130	04/15/2010 0505
Carbazole	1300	920		1	69	30-130	04/15/2010 0505
Chrysene	1300	980		1	73	30-130	04/15/2010 0505
Di-n-butyl phthalate	1300	970		1	73	30-130	04/15/2010 0505
Di-n-octylphthalate	1300	1100		1	83	30-130	04/15/2010 0505
Dibenzo(a,h)anthracene	1300	870		1	65	30-130	04/15/2010 0505
Dibenzofuran	1300	860		1	64	30-130	04/15/2010 0505
Diethylphthalate	1300	900		1	68	30-130	04/15/2010 0505
Dimethyl phthalate	1300	930		1	70	30-130	04/15/2010 0505
Fluoranthene	1300	920		1	69	30-130	04/15/2010 0505

PQL = Practical quantitation limit
ND = Not detected at or above the MDL
P = The RPD between two GC columns exceeds 40%
J = Estimated result < PQL and ≥ MDL
N - Recovery is out of criteria
+ - RPD is out of criteria

Where applicable, all soil sample analysis are reported on a dry weight basis unless flagged with a "W"

Note: Calculations are performed before rounding to avoid round-off errors in calculated results

Semivolatile Organic Compounds by GC/MS - LCS

Sample ID: LQ31355-002
Batch: 31355
Analytical Method: 8270D

Matrix: Solid
Prep Method: 3550C
Prep Date: 04/13/2010 0

Parameter	Spike Amount (ug/kg)	Result (ug/kg)	Q	Dil	% Rec	% Rec Limit	Analysis Date
Fluorene	1300	910		1	68	30-130	04/15/2010 0505
Hexachlorobenzene	1300	950		1	71	30-130	04/15/2010 0505
Hexachlorobutadiene	1300	730		1	55	30-130	04/15/2010 0505
Hexachlorocyclopentadiene	6700	2800		1	42	30-130	04/15/2010 0505
Hexachloroethane	1300	650		1	49	30-130	04/15/2010 0505
Indeno(1,2,3-c,d)pyrene	1300	870		1	65	30-130	04/15/2010 0505
N-Nitrosodiphenylamine (Diphenylamine)	1300	990		1	74	30-130	04/15/2010 0505
Naphthalene	1300	720		1	54	30-130	04/15/2010 0505
Nitrobenzene	1300	800		1	60	30-130	04/15/2010 0505
Pentachlorophenol	6700	4100		1	62	30-130	04/15/2010 0505
Phenanthrene	1300	920		1	69	30-130	04/15/2010 0505
Phenol	1300	770		1	58	30-130	04/15/2010 0505
Pyrene	1300	990		1	75	30-130	04/15/2010 0505

Surrogate	Q	% Rec	Acceptance Limit
2,4,6-Tribromophenol		92	30-117
2-Fluorobiphenyl		70	33-102
2-Fluorophenol		64	28-104
Nitrobenzene-d5		69	22-109
Phenol-d5		63	27-103
Terphenyl-d14		74	41-120

PQL = Practical quantitation limit
ND = Not detected at or above the MDL
P = The RPD between two GC columns exceeds 40%
J = Estimated result < PQL and ≥ MDL
N - Recovery is out of criteria
+ - RPD is out of criteria

Where applicable, all soil sample analysis are reported on a dry weight basis unless flagged with a "W"

Note: Calculations are performed before rounding to avoid round-off errors in calculated results

Semivolatile Organic Compounds by GC/MS - MS

Sample ID: LD09018-028MS
Batch: 31355
Analytical Method: 8270D

Matrix: Solid
Prep Method: 3550C
Prep Date: 04/13/2010 0

Parameter	Sample Amount (ug/kg)	Spike Amount (ug/kg)	Result (ug/kg)	Q	Dil	% Rec	% Rec Limit	Analysis Date
Acenaphthene	ND	1800	1200		1	65	30-130	04/15/2010 0543
Acenaphthylene	ND	1800	1400		1	79	30-130	04/15/2010 0543
Anthracene	ND	1800	1300		1	73	30-130	04/15/2010 0543
Benzo(a)anthracene	ND	1800	1400		1	78	30-130	04/15/2010 0543
Benzo(a)pyrene	ND	1800	1600		1	88	30-130	04/15/2010 0543
Benzo(b)fluoranthene	ND	1800	1400		1	76	30-130	04/15/2010 0543
Benzo(g,h,i)perylene	ND	1800	1100		1	62	30-130	04/15/2010 0543
Benzo(k)fluoranthene	ND	1800	1400		1	77	30-130	04/15/2010 0543
4-Bromophenyl phenyl ether	ND	1800	1400		1	78	30-130	04/15/2010 0543
Butyl benzyl phthalate	ND	1800	1500		1	83	30-130	04/15/2010 0543
Carbazole	ND	1800	1300		1	74	30-130	04/15/2010 0543
4-Chloro-3-methyl phenol	ND	1800	1200		1	68	30-130	04/15/2010 0543
4-Chloroaniline	ND	1800	550		1	31	10-130	04/15/2010 0543
bis(2-Chloroethoxy)methane	ND	1800	840		1	46	30-130	04/15/2010 0543
bis(2-Chloroethyl)ether	ND	1800	680		1	37	30-130	04/15/2010 0543
bis(2-Chloroisopropyl)ether	ND	1800	660		1	36	30-130	04/15/2010 0543
2-Chloronaphthalene	ND	1800	1100		1	61	30-130	04/15/2010 0543
2-Chlorophenol	ND	1800	790		1	43	30-130	04/15/2010 0543
4-Chlorophenyl phenyl ether	ND	1800	1300		1	72	30-130	04/15/2010 0543
Chrysene	ND	1800	1600		1	87	30-130	04/15/2010 0543
Dibenzo(a,h)anthracene	ND	1800	1200		1	64	30-130	04/15/2010 0543
Dibenzofuran	ND	1800	1200		1	65	30-130	04/15/2010 0543
2,4-Dichlorophenol	ND	1800	1000		1	56	30-130	04/15/2010 0543
Diethylphthalate	ND	1800	1300		1	70	30-130	04/15/2010 0543
Dimethyl phthalate	ND	1800	1300		1	70	30-130	04/15/2010 0543
2,4-Dimethylphenol	ND	1800	980		1	54	30-130	04/15/2010 0543
Di-n-butyl phthalate	ND	1800	1400		1	76	30-130	04/15/2010 0543
4,6-Dinitro-2-methylphenol	ND	9100	9000		1	99	30-130	04/15/2010 0543
2,4-Dinitrophenol	ND	9100	9100		1	100	30-130	04/15/2010 0543
2,4-Dinitrotoluene	ND	3600	4100		1	113	30-130	04/15/2010 0543
2,6-Dinitrotoluene	ND	3600	3000		1	83	30-130	04/15/2010 0543
Di-n-octylphthalate	ND	1800	1700		1	95	30-130	04/15/2010 0543
bis(2-Ethylhexyl)phthalate	ND	1800	1600		1	87	30-130	04/15/2010 0543
Fluoranthene	ND	1800	1400		1	76	30-130	04/15/2010 0543
Fluorene	ND	1800	1300		1	71	30-130	04/15/2010 0543
Hexachlorobenzene	ND	1800	1400		1	76	30-130	04/15/2010 0543
Hexachlorobutadiene	ND	1800	760		1	42	30-130	04/15/2010 0543
Hexachlorocyclopentadiene	ND	9100	2000	N	1	22	30-130	04/15/2010 0543
Hexachloroethane	ND	1800	450	N	1	25	30-130	04/15/2010 0543
Indeno(1,2,3-c,d)pyrene	ND	1800	1200		1	64	30-130	04/15/2010 0543
2-Methylnaphthalene	ND	1800	910		1	50	30-130	04/15/2010 0543
2-Methylphenol	ND	1800	920		1	51	30-130	04/15/2010 0543
3 & 4-Methylphenol	ND	3600	1600		1	45	30-130	04/15/2010 0543
Naphthalene	ND	1800	790		1	43	30-130	04/15/2010 0543

PQL = Practical quantitation limit
ND = Not detected at or above the MDL
P = The RPD between two GC columns exceeds 40%
J = Estimated result < PQL and ≥ MDL
N - Recovery is out of criteria
+ - RPD is out of criteria

Where applicable, all soil sample analysis are reported on a dry weight basis unless flagged with a "W"

Note: Calculations are performed before rounding to avoid round-off errors in calculated results

Semivolatile Organic Compounds by GC/MS - MS

Sample ID: LD09018-028MS
Batch: 31355
Analytical Method: 8270D

Matrix: Solid
Prep Method: 3550C
Prep Date: 04/13/2010 0

Parameter	Sample Amount (ug/kg)	Spike Amount (ug/kg)	Result (ug/kg)	Q	Dil	% Rec	% Rec Limit	Analysis Date
2-Nitroaniline	ND	3600	2900		1	79	30-130	04/15/2010 0543
3-Nitroaniline	ND	3600	2600		1	70	30-130	04/15/2010 0543
4-Nitroaniline	ND	3600	2600		1	72	30-130	04/15/2010 0543
Nitrobenzene	ND	1800	840		1	46	30-130	04/15/2010 0543
2-Nitrophenol	ND	3600	2200		1	61	30-130	04/15/2010 0543
4-Nitrophenol	ND	9100	6000		1	66	30-130	04/15/2010 0543
N-Nitrosodiphenylamine (Diphenylamine)	ND	1800	1500		1	80	30-130	04/15/2010 0543
Pentachlorophenol	ND	9100	6500		1	71	30-130	04/15/2010 0543
Phenanthrene	ND	1800	1400		1	77	30-130	04/15/2010 0543
Phenol	ND	1800	830		1	46	30-130	04/15/2010 0543
Pyrene	ND	1800	1700		1	96	30-130	04/15/2010 0543
2,4,5-Trichlorophenol	ND	1800	1400		1	76	30-130	04/15/2010 0543
2,4,6-Trichlorophenol	ND	1800	1300		1	70	30-130	04/15/2010 0543

Surrogate	Q	% Rec	Acceptance Limit
2-Fluorobiphenyl		61	33-102
2-Fluorophenol		45	28-104
Nitrobenzene-d5		50	22-109
Phenol-d5		48	27-103
Terphenyl-d14		76	41-120
2,4,6-Tribromophenol		94	30-117

PQL = Practical quantitation limit
ND = Not detected at or above the MDL
P = The RPD between two GC columns exceeds 40%
J = Estimated result < PQL and ≥ MDL
N - Recovery is out of criteria
+ - RPD is out of criteria

Where applicable, all soil sample analysis are reported on a dry weight basis unless flagged with a "W"

Note: Calculations are performed before rounding to avoid round-off errors in calculated results

Semivolatile Organic Compounds by GC/MS - MSD

Sample ID: LD09018-028MD
Batch: 31355
Analytical Method: 8270D

Matrix: Solid
Prep Method: 3550C
Prep Date: 04/13/2010 0

Parameter	Sample Amount (ug/kg)	Spike Amount (ug/kg)	Result (ug/kg)	Q	Dil	% Rec	% RPD	% Rec Limit	% RPD Limit	Analysis Date
Acenaphthene	ND	1800	1100		1	61	6.6	30-130	20	04/15/2010 0602
Acenaphthylene	ND	1800	1400		1	75	4.5	30-130	20	04/15/2010 0602
Anthracene	ND	1800	1200		1	64	13	30-130	20	04/15/2010 0602
Benzo(a)anthracene	ND	1800	1300		1	68	12	30-130	20	04/15/2010 0602
Benzo(a)pyrene	ND	1800	1400		1	77	12	30-130	20	04/15/2010 0602
Benzo(b)fluoranthene	ND	1800	1300		1	70	7.0	30-130	20	04/15/2010 0602
Benzo(g,h,i)perylene	ND	1800	980		1	53	14	30-130	20	04/15/2010 0602
Benzo(k)fluoranthene	ND	1800	1300		1	69	10	30-130	20	04/15/2010 0602
4-Bromophenyl phenyl ether	ND	1800	1200		1	68	13	30-130	20	04/15/2010 0602
Butyl benzyl phthalate	ND	1800	1400		1	76	7.1	30-130	20	04/15/2010 0602
Carbazole	ND	1800	1200		1	63	15	30-130	20	04/15/2010 0602
4-Chloro-3-methyl phenol	ND	1800	1100		1	61	9.5	30-130	20	04/15/2010 0602
4-Chloroaniline	ND	1800	580		1	32	4.1	10-130	40	04/15/2010 0602
bis(2-Chloroethoxy)methane	ND	1800	980		1	53	15	30-130	20	04/15/2010 0602
bis(2-Chloroethyl)ether	ND	1800	870	+	1	48	25	30-130	20	04/15/2010 0602
bis(2-Chloroisopropyl)ether	ND	1800	840	+	1	46	24	30-130	20	04/15/2010 0602
2-Chloronaphthalene	ND	1800	1100		1	60	1.9	30-130	20	04/15/2010 0602
2-Chlorophenol	ND	1800	960		1	52	20	30-130	20	04/15/2010 0602
4-Chlorophenyl phenyl ether	ND	1800	1200		1	64	11	30-130	20	04/15/2010 0602
Chrysene	ND	1800	1300	+	1	69	23	30-130	20	04/15/2010 0602
Dibenzo(a,h)anthracene	ND	1800	1000		1	54	14	30-130	20	04/15/2010 0602
Dibenzofuran	ND	1800	1100		1	60	8.3	30-130	20	04/15/2010 0602
2,4-Dichlorophenol	ND	1800	1100		1	59	7.7	30-130	20	04/15/2010 0602
Diethylphthalate	ND	1800	1100		1	62	12	30-130	20	04/15/2010 0602
Dimethyl phthalate	ND	1800	1200		1	63	10	30-130	20	04/15/2010 0602
2,4-Dimethylphenol	ND	1800	1100		1	59	10	30-130	20	04/15/2010 0602
Di-n-butyl phthalate	ND	1800	1200		1	68	10	30-130	20	04/15/2010 0602
4,6-Dinitro-2-methylphenol	ND	9200	7800		1	86	14	30-130	20	04/15/2010 0602
2,4-Dinitrophenol	ND	9200	6800	+	1	74	29	30-130	20	04/15/2010 0602
2,4-Dinitrotoluene	ND	3700	3600		1	98	13	30-130	20	04/15/2010 0602
2,6-Dinitrotoluene	ND	3700	2700		1	75	10	30-130	20	04/15/2010 0602
Di-n-octylphthalate	ND	1800	1600		1	89	5.7	30-130	20	04/15/2010 0602
bis(2-Ethylhexyl)phthalate	ND	1800	1500		1	81	5.8	30-130	20	04/15/2010 0602
Fluoranthene	ND	1800	1200		1	64	15	30-130	20	04/15/2010 0602
Fluorene	ND	1800	1100		1	63	11	30-130	20	04/15/2010 0602
Hexachlorobenzene	ND	1800	1200		1	66	13	30-130	20	04/15/2010 0602
Hexachlorobutadiene	ND	1800	950	+	1	52	22	30-130	20	04/15/2010 0602
Hexachlorocyclopentadiene	ND	9200	2300	N	1	25	15	30-130	20	04/15/2010 0602
Hexachloroethane	ND	1800	620	+	1	34	31	30-130	20	04/15/2010 0602
Indeno(1,2,3-c,d)pyrene	ND	1800	1000		1	55	13	30-130	20	04/15/2010 0602
2-Methylnaphthalene	ND	1800	1000		1	55	8.9	30-130	20	04/15/2010 0602
2-Methylphenol	ND	1800	1000		1	57	13	30-130	20	04/15/2010 0602
3 & 4-Methylphenol	ND	3700	1800		1	50	10	30-130	20	04/15/2010 0602
Naphthalene	ND	1800	930		1	51	17	30-130	20	04/15/2010 0602

PQL = Practical quantitation limit
ND = Not detected at or above the MDL
P = The RPD between two GC columns exceeds 40%
J = Estimated result < PQL and ≥ MDL
N - Recovery is out of criteria
+ - RPD is out of criteria

Where applicable, all soil sample analysis are reported on a dry weight basis unless flagged with a "W"

Note: Calculations are performed before rounding to avoid round-off errors in calculated results

Semivolatile Organic Compounds by GC/MS - MSD

Sample ID: LD09018-028MD
Batch: 31355
Analytical Method: 8270D

Matrix: Solid
Prep Method: 3550C
Prep Date: 04/13/2010 0

Parameter	Sample Amount (ug/kg)	Spike Amount (ug/kg)	Result (ug/kg)	Q	Dil	% Rec	% RPD	% Rec Limit	% RPD Limit	Analysis Date
2-Nitroaniline	ND	3700	2600		1	71	9.8	30-130	20	04/15/2010 0602
3-Nitroaniline	ND	3700	2300		1	63	9.3	30-130	20	04/15/2010 0602
4-Nitroaniline	ND	3700	2300		1	63	12	30-130	20	04/15/2010 0602
Nitrobenzene	ND	1800	1000		1	56	20	30-130	20	04/15/2010 0602
2-Nitrophenol	ND	3700	2600		1	72	17	30-130	20	04/15/2010 0602
4-Nitrophenol	ND	9200	5500		1	60	8.7	30-130	20	04/15/2010 0602
N-Nitrosodiphenylamine (Diphenylamine)	ND	1800	1300		1	69	14	30-130	20	04/15/2010 0602
Pentachlorophenol	ND	9200	5800		1	64	10	30-130	20	04/15/2010 0602
Phenanthrene	ND	1800	1200		1	64	18	30-130	20	04/15/2010 0602
Phenol	ND	1800	970		1	53	15	30-130	20	04/15/2010 0602
Pyrene	ND	1800	1300	+	1	72	27	30-130	20	04/15/2010 0602
2,4,5-Trichlorophenol	ND	1800	1300		1	69	8.2	30-130	20	04/15/2010 0602
2,4,6-Trichlorophenol	ND	1800	1200		1	65	7.1	30-130	20	04/15/2010 0602

Surrogate	Q	% Rec	Acceptance Limit
2-Fluorobiphenyl		62	33-102
2-Fluorophenol		57	28-104
Nitrobenzene-d5		60	22-109
Phenol-d5		55	27-103
Terphenyl-d14		68	41-120
2,4,6-Tribromophenol		83	30-117

PQL = Practical quantitation limit
ND = Not detected at or above the MDL
P = The RPD between two GC columns exceeds 40%
J = Estimated result < PQL and ≥ MDL
N - Recovery is out of criteria
+ - RPD is out of criteria

Where applicable, all soil sample analysis are reported on a dry weight basis unless flagged with a "W"

Note: Calculations are performed before rounding to avoid round-off errors in calculated results

Semivolatile Organic Compounds by GC/MS - MB

Sample ID: LQ31716-001
Batch: 31716
Analytical Method: 8270D

Matrix: Aqueous
Prep Method: 3520C
Prep Date: 04/18/2010 1330

Parameter	Result	Q	Dil	PQL	MDL	Units	Analysis Date
1,1'-Biphenyl	ND		1	1.0	0.20	ug/L	04/22/2010 1659
2,4,5-Trichlorophenol	ND		1	1.0	0.18	ug/L	04/22/2010 1659
2,4,6-Trichlorophenol	ND		1	1.0	0.22	ug/L	04/22/2010 1659
2,4-Dichlorophenol	ND		1	1.0	0.15	ug/L	04/22/2010 1659
2,4-Dimethylphenol	ND		1	1.0	0.31	ug/L	04/22/2010 1659
2,4-Dinitrophenol	ND		1	5.0	0.25	ug/L	04/22/2010 1659
2,4-Dinitrotoluene	ND		1	2.0	0.45	ug/L	04/22/2010 1659
2,6-Dinitrotoluene	ND		1	2.0	0.40	ug/L	04/22/2010 1659
2-Chloronaphthalene	ND		1	1.0	0.12	ug/L	04/22/2010 1659
2-Chlorophenol	ND		1	1.0	0.13	ug/L	04/22/2010 1659
2-Methylnaphthalene	ND		1	1.0	0.080	ug/L	04/22/2010 1659
2-Methylphenol	ND		1	1.0	0.17	ug/L	04/22/2010 1659
2-Nitroaniline	ND		1	2.0	0.55	ug/L	04/22/2010 1659
2-Nitrophenol	ND		1	2.0	0.27	ug/L	04/22/2010 1659
3 & 4-Methylphenol	ND		1	2.0	0.57	ug/L	04/22/2010 1659
3,3'-Dichlorobenzidine	ND		1	5.0	0.81	ug/L	04/22/2010 1659
3-Nitroaniline	ND		1	2.0	0.77	ug/L	04/22/2010 1659
4,6-Dinitro-2-methylphenol	ND		1	5.0	1.5	ug/L	04/22/2010 1659
4-Bromophenyl phenyl ether	ND		1	1.0	0.12	ug/L	04/22/2010 1659
4-Chloro-3-methyl phenol	ND		1	1.0	0.22	ug/L	04/22/2010 1659
4-Chloroaniline	ND		1	1.0	0.13	ug/L	04/22/2010 1659
4-Chlorophenyl phenyl ether	ND		1	1.0	0.11	ug/L	04/22/2010 1659
4-Nitroaniline	ND		1	2.0	0.39	ug/L	04/22/2010 1659
4-Nitrophenol	ND		1	5.0	0.64	ug/L	04/22/2010 1659
Acenaphthene	ND		1	1.0	0.090	ug/L	04/22/2010 1659
Acenaphthylene	ND		1	1.0	0.16	ug/L	04/22/2010 1659
Acetophenone	ND		1	1.0	0.32	ug/L	04/22/2010 1659
Anthracene	ND		1	1.0	0.13	ug/L	04/22/2010 1659
Atrazine	ND		1	1.0	0.20	ug/L	04/22/2010 1659
Benzaldehyde	ND		1	5.0	1.0	ug/L	04/22/2010 1659
Benzo(a)anthracene	ND		1	1.0	0.15	ug/L	04/22/2010 1659
Benzo(a)pyrene	ND		1	1.0	0.16	ug/L	04/22/2010 1659
Benzo(b)fluoranthene	ND		1	1.0	0.20	ug/L	04/22/2010 1659
Benzo(g,h,i)perylene	ND		1	1.0	0.23	ug/L	04/22/2010 1659
Benzo(k)fluoranthene	ND		1	1.0	0.12	ug/L	04/22/2010 1659
bis(2-Chloroethoxy)methane	ND		1	1.0	0.13	ug/L	04/22/2010 1659
bis(2-Chloroethyl)ether	ND		1	1.0	0.13	ug/L	04/22/2010 1659
bis(2-Chloroisopropyl)ether	ND		1	1.0	0.080	ug/L	04/22/2010 1659
bis(2-Ethylhexyl)phthalate	ND		1	5.0	1.7	ug/L	04/22/2010 1659
Butyl benzyl phthalate	ND		1	5.0	1.7	ug/L	04/22/2010 1659
Caprolactam	ND		1	5.0	1.2	ug/L	04/22/2010 1659
Carbazole	ND		1	1.0	0.25	ug/L	04/22/2010 1659
Chrysene	ND		1	1.0	0.12	ug/L	04/22/2010 1659
Di-n-butyl phthalate	ND		1	5.0	1.7	ug/L	04/22/2010 1659

PQL = Practical quantitation limit
ND = Not detected at or above the MDL
P = The RPD between two GC columns exceeds 40%
J = Estimated result < PQL and ≥ MDL
N - Recovery is out of criteria
+ - RPD is out of criteria

Where applicable, all soil sample analysis are reported on a dry weight basis unless flagged with a "W"

Note: Calculations are performed before rounding to avoid round-off errors in calculated results

Semivolatile Organic Compounds by GC/MS - MB

Sample ID: LQ31716-001
Batch: 31716
Analytical Method: 8270D

Matrix: Aqueous
Prep Method: 3520C
Prep Date: 04/18/2010 1330

Parameter	Result	Q	Dil	PQL	MDL	Units	Analysis Date
Di-n-octylphthalate	ND		1	5.0	1.7	ug/L	04/22/2010 1659
Dibenzo(a,h)anthracene	ND		1	1.0	0.13	ug/L	04/22/2010 1659
Dibenzofuran	ND		1	1.0	0.16	ug/L	04/22/2010 1659
Diethylphthalate	ND		1	5.0	1.7	ug/L	04/22/2010 1659
Dimethyl phthalate	ND		1	5.0	1.7	ug/L	04/22/2010 1659
Fluoranthene	ND		1	1.0	0.21	ug/L	04/22/2010 1659
Fluorene	ND		1	1.0	0.10	ug/L	04/22/2010 1659
Hexachlorobenzene	ND		1	1.0	0.21	ug/L	04/22/2010 1659
Hexachlorobutadiene	ND		1	1.0	0.090	ug/L	04/22/2010 1659
Hexachlorocyclopentadiene	ND		1	5.0	0.23	ug/L	04/22/2010 1659
Hexachloroethane	ND		1	1.0	0.11	ug/L	04/22/2010 1659
Indeno(1,2,3-c,d)pyrene	ND		1	1.0	0.23	ug/L	04/22/2010 1659
Isophorone	ND		1	1.0	0.080	ug/L	04/22/2010 1659
N-Nitrosodi-n-propylamine	ND		1	1.0	0.080	ug/L	04/22/2010 1659
N-Nitrosodiphenylamine (Diphenylamine)	ND		1	1.0	0.38	ug/L	04/22/2010 1659
Naphthalene	ND		1	1.0	0.070	ug/L	04/22/2010 1659
Nitrobenzene	ND		1	1.0	0.10	ug/L	04/22/2010 1659
Pentachlorophenol	ND		1	5.0	0.54	ug/L	04/22/2010 1659
Phenanthrene	ND		1	1.0	0.18	ug/L	04/22/2010 1659
Phenol	ND		1	1.0	0.11	ug/L	04/22/2010 1659
Pyrene	ND		1	1.0	0.16	ug/L	04/22/2010 1659

Surrogate	Q	% Rec	Acceptance Limit
2,4,6-Tribromophenol		68	41-144
2-Fluorobiphenyl		84	37-129
2-Fluorophenol		77	24-127
Nitrobenzene-d5		84	38-127
Phenol-d5		84	28-128
Terphenyl-d14		79	10-148

PQL = Practical quantitation limit
ND = Not detected at or above the MDL
P = The RPD between two GC columns exceeds 40%
J = Estimated result < PQL and ≥ MDL
N - Recovery is out of criteria
+ - RPD is out of criteria

Where applicable, all soil sample analysis are reported on a dry weight basis unless flagged with a "W"

Note: Calculations are performed before rounding to avoid round-off errors in calculated results

Semivolatile Organic Compounds by GC/MS - LCS

Sample ID: LQ31716-002
Batch: 31716
Analytical Method: 8270D

Matrix: Aqueous
Prep Method: 3520C
Prep Date: 04/18/2010 1330

Parameter	Spike Amount (ug/L)	Result (ug/L)	Q	Dil	% Rec	% Rec Limit	Analysis Date
2,4,5-Trichlorophenol	20	16		1	80	46-125	04/22/2010 1719
2,4,6-Trichlorophenol	20	16		1	78	36-123	04/22/2010 1719
2,4-Dichlorophenol	20	15		1	73	38-127	04/22/2010 1719
2,4-Dimethylphenol	20	16		1	79	36-110	04/22/2010 1719
2,4-Dinitrophenol	100	92		1	92	33-143	04/22/2010 1719
2,4-Dinitrotoluene	40	34		1	84	55-137	04/22/2010 1719
2,6-Dinitrotoluene	40	34		1	84	53-128	04/22/2010 1719
2-Chloronaphthalene	20	15		1	73	42-132	04/22/2010 1719
2-Chlorophenol	20	16		1	81	40-128	04/22/2010 1719
2-Methylnaphthalene	20	15		1	73	49-122	04/22/2010 1719
2-Methylphenol	20	16		1	81	33-122	04/22/2010 1719
2-Nitroaniline	40	33		1	84	48-126	04/22/2010 1719
2-Nitrophenol	40	32		1	80	44-131	04/22/2010 1719
3 & 4-Methylphenol	40	32		1	80	48-112	04/22/2010 1719
3-Nitroaniline	40	28		1	70	29-109	04/22/2010 1719
4,6-Dinitro-2-methylphenol	100	94		1	94	46-151	04/22/2010 1719
4-Bromophenyl phenyl ether	20	16		1	79	49-123	04/22/2010 1719
4-Chloro-3-methyl phenol	20	15		1	76	48-136	04/22/2010 1719
4-Chloroaniline	20	8.5		1	43	18-73	04/22/2010 1719
4-Chlorophenyl phenyl ether	20	16		1	79	34-124	04/22/2010 1719
4-Nitroaniline	40	33		1	82	42-154	04/22/2010 1719
4-Nitrophenol	100	89		1	89	43-145	04/22/2010 1719
Acenaphthene	20	17		1	86	51-130	04/22/2010 1719
Acenaphthylene	20	20		1	99	46-131	04/22/2010 1719
Anthracene	20	17		1	85	48-122	04/22/2010 1719
Benzo(a)anthracene	20	17		1	85	50-143	04/22/2010 1719
Benzo(a)pyrene	20	20		1	101	55-141	04/22/2010 1719
Benzo(b)fluoranthene	20	16		1	81	48-147	04/22/2010 1719
Benzo(g,h,i)perylene	20	17		1	85	48-139	04/22/2010 1719
Benzo(k)fluoranthene	20	18		1	88	48-148	04/22/2010 1719
bis(2-Chloroethoxy)methane	20	15		1	77	46-130	04/22/2010 1719
bis(2-Chloroethyl)ether	20	18		1	89	42-127	04/22/2010 1719
bis(2-Chloroisopropyl)ether	20	18		1	92	36-133	04/22/2010 1719
bis(2-Ethylhexyl)phthalate	20	18		1	91	40-141	04/22/2010 1719
Butyl benzyl phthalate	20	19		1	97	52-142	04/22/2010 1719
Carbazole	20	17		1	84	45-101	04/22/2010 1719
Chrysene	20	17		1	84	51-137	04/22/2010 1719
Di-n-butyl phthalate	20	19		1	97	50-134	04/22/2010 1719
Di-n-octylphthalate	20	21		1	105	50-136	04/22/2010 1719
Dibenzo(a,h)anthracene	20	17		1	85	48-139	04/22/2010 1719
Dibenzofuran	20	16		1	78	45-142	04/22/2010 1719
Diethylphthalate	20	17		1	86	48-124	04/22/2010 1719
Dimethyl phthalate	20	16		1	81	43-122	04/22/2010 1719
Fluoranthene	20	17		1	84	50-124	04/22/2010 1719

PQL = Practical quantitation limit
ND = Not detected at or above the MDL
P = The RPD between two GC columns exceeds 40%
J = Estimated result < PQL and ≥ MDL
N - Recovery is out of criteria
+ - RPD is out of criteria

Where applicable, all soil sample analysis are reported on a dry weight basis unless flagged with a "W"

Note: Calculations are performed before rounding to avoid round-off errors in calculated results

Semivolatile Organic Compounds by GC/MS - LCS

Sample ID: LQ31716-002
Batch: 31716
Analytical Method: 8270D

Matrix: Aqueous
Prep Method: 3520C
Prep Date: 04/18/2010 1330

Parameter	Spike Amount (ug/L)	Result (ug/L)	Q	Dil	% Rec	% Rec Limit	Analysis Date
Fluorene	20	16		1	81	39-122	04/22/2010 1719
Hexachlorobenzene	20	15		1	77	46-125	04/22/2010 1719
Hexachlorobutadiene	20	14		1	70	38-121	04/22/2010 1719
Hexachlorocyclopentadiene	100	93		1	93	24-110	04/22/2010 1719
Hexachloroethane	20	16		1	79	32-109	04/22/2010 1719
Indeno(1,2,3-c,d)pyrene	20	17		1	85	49-146	04/22/2010 1719
Isophorone	20	16		1	79	43-118	04/22/2010 1719
N-Nitrosodi-n-propylamine	20	17		1	87	46-135	04/22/2010 1719
N-Nitrosodiphenylamine (Diphenylamine)	20	17		1	86	44-124	04/22/2010 1719
Naphthalene	20	15		1	73	45-118	04/22/2010 1719
Nitrobenzene	20	17		1	84	46-131	04/22/2010 1719
Pentachlorophenol	100	87		1	87	30-137	04/22/2010 1719
Phenanthrene	20	17		1	84	49-122	04/22/2010 1719
Phenol	20	16		1	82	35-118	04/22/2010 1719
Pyrene	20	17		1	87	50-130	04/22/2010 1719

Surrogate	Q	% Rec	Acceptance Limit
2,4,6-Tribromophenol		78	41-144
2-Fluorobiphenyl		82	37-129
2-Fluorophenol		79	24-127
Nitrobenzene-d5		84	38-127
Phenol-d5		83	28-128
Terphenyl-d14		75	10-148

PQL = Practical quantitation limit
ND = Not detected at or above the MDL
P = The RPD between two GC columns exceeds 40%
J = Estimated result < PQL and ≥ MDL
N - Recovery is out of criteria
+ - RPD is out of criteria

Where applicable, all soil sample analysis are reported on a dry weight basis unless flagged with a "W"

Note: Calculations are performed before rounding to avoid round-off errors in calculated results

Semivolatile Organic Compounds by GC/MS - LCSD

Sample ID: LQ31716-003
Batch: 31716
Analytical Method: 8270D

Matrix: Aqueous
Prep Method: 3520C
Prep Date: 04/18/2010 1330

Parameter	Spike Amount (ug/L)	Result (ug/L)	Q	Dil	% Rec	% RPD	% Rec Limit	% RPD Limit	Analysis Date
2,4,5-Trichlorophenol	20	16		1	80	0.30	46-125	40	04/22/2010 1739
2,4,6-Trichlorophenol	20	16		1	81	2.9	36-123	40	04/22/2010 1739
2,4-Dichlorophenol	20	15		1	75	2.9	38-127	40	04/22/2010 1739
2,4-Dimethylphenol	20	16		1	80	1.4	36-110	40	04/22/2010 1739
2,4-Dinitrophenol	100	90		1	90	2.8	33-143	40	04/22/2010 1739
2,4-Dinitrotoluene	40	33		1	82	1.9	55-137	40	04/22/2010 1739
2,6-Dinitrotoluene	40	34		1	84	0.15	53-128	40	04/22/2010 1739
2-Chloronaphthalene	20	15		1	76	2.8	42-132	40	04/22/2010 1739
2-Chlorophenol	20	16		1	82	2.0	40-128	40	04/22/2010 1739
2-Methylnaphthalene	20	15		1	74	1.8	49-122	40	04/22/2010 1739
2-Methylphenol	20	17		1	83	2.3	33-122	40	04/22/2010 1739
2-Nitroaniline	40	34		1	86	2.7	48-126	40	04/22/2010 1739
2-Nitrophenol	40	33		1	83	3.0	44-131	40	04/22/2010 1739
3 & 4-Methylphenol	40	33		1	82	2.2	48-112	40	04/22/2010 1739
3-Nitroaniline	40	28		1	69	0.79	29-109	40	04/22/2010 1739
4,6-Dinitro-2-methylphenol	100	91		1	91	4.1	46-151	40	04/22/2010 1739
4-Bromophenyl phenyl ether	20	16		1	82	3.4	49-123	40	04/22/2010 1739
4-Chloro-3-methyl phenol	20	15		1	77	1.2	48-136	40	04/22/2010 1739
4-Chloroaniline	20	8.3		1	42	2.2	18-73	40	04/22/2010 1739
4-Chlorophenyl phenyl ether	20	16		1	81	2.1	34-124	40	04/22/2010 1739
4-Nitroaniline	40	33		1	82	0.045	42-154	40	04/22/2010 1739
4-Nitrophenol	100	89		1	89	0.77	43-145	40	04/22/2010 1739
Acenaphthene	20	17		1	87	1.4	51-130	40	04/22/2010 1739
Acenaphthylene	20	20		1	101	1.4	46-131	40	04/22/2010 1739
Anthracene	20	17		1	86	2.1	48-122	40	04/22/2010 1739
Benzo(a)anthracene	20	17		1	85	0.10	50-143	40	04/22/2010 1739
Benzo(a)pyrene	20	20		1	101	0.49	55-141	40	04/22/2010 1739
Benzo(b)fluoranthene	20	16		1	81	0.20	48-147	40	04/22/2010 1739
Benzo(g,h,i)perylene	20	17		1	86	0.70	48-139	40	04/22/2010 1739
Benzo(k)fluoranthene	20	18		1	89	1.8	48-148	40	04/22/2010 1739
bis(2-Chloroethoxy)methane	20	16		1	78	1.3	46-130	40	04/22/2010 1739
bis(2-Chloroethyl)ether	20	18		1	91	2.0	42-127	40	04/22/2010 1739
bis(2-Chloroisopropyl)ether	20	19		1	93	1.4	36-133	40	04/22/2010 1739
bis(2-Ethylhexyl)phthalate	20	18		1	90	1.1	40-141	40	04/22/2010 1739
Butyl benzyl phthalate	20	19		1	95	1.9	52-142	40	04/22/2010 1739
Carbazole	20	17		1	85	1.5	45-101	40	04/22/2010 1739
Chrysene	20	17		1	84	0.70	51-137	40	04/22/2010 1739
Di-n-butyl phthalate	20	20		1	98	1.3	50-134	40	04/22/2010 1739
Di-n-octylphthalate	20	21		1	103	2.4	50-136	40	04/22/2010 1739
Dibenzo(a,h)anthracene	20	17		1	85	0.70	48-139	40	04/22/2010 1739
Dibenzofuran	20	16		1	78	0.62	45-142	40	04/22/2010 1739
Diethylphthalate	20	17		1	85	2.0	48-124	40	04/22/2010 1739
Dimethyl phthalate	20	16		1	81	0.25	43-122	40	04/22/2010 1739
Fluoranthene	20	17		1	84	0.28	50-124	40	04/22/2010 1739

PQL = Practical quantitation limit
ND = Not detected at or above the MDL
P = The RPD between two GC columns exceeds 40%
J = Estimated result < PQL and ≥ MDL
N - Recovery is out of criteria
+ - RPD is out of criteria

Where applicable, all soil sample analysis are reported on a dry weight basis unless flagged with a "W"

Note: Calculations are performed before rounding to avoid round-off errors in calculated results

Semivolatile Organic Compounds by GC/MS - LCSD

Sample ID: LQ31716-003
Batch: 31716
Analytical Method: 8270D

Matrix: Aqueous
Prep Method: 3520C
Prep Date: 04/18/2010 1330

Parameter	Spike Amount (ug/L)	Result (ug/L)	Q	Dil	% Rec	% RPD	% Rec Limit	% RPD Limit	Analysis Date
Fluorene	20	16		1	82	1.9	39-122	40	04/22/2010 1739
Hexachlorobenzene	20	16		1	79	3.2	46-125	40	04/22/2010 1739
Hexachlorobutadiene	20	15		1	73	3.5	38-121	40	04/22/2010 1739
Hexachlorocyclopentadiene	100	95		1	95	2.0	24-110	40	04/22/2010 1739
Hexachloroethane	20	16		1	81	2.1	32-109	40	04/22/2010 1739
Indeno(1,2,3-c,d)pyrene	20	17		1	86	0.40	49-146	40	04/22/2010 1739
Isophorone	20	16		1	81	1.5	43-118	40	04/22/2010 1739
N-Nitrosodi-n-propylamine	20	17		1	87	0.36	46-135	40	04/22/2010 1739
N-Nitrosodiphenylamine (Diphenylamine)	20	17		1	87	1.1	44-124	40	04/22/2010 1739
Naphthalene	20	15		1	75	1.7	45-118	40	04/22/2010 1739
Nitrobenzene	20	17		1	85	1.5	46-131	40	04/22/2010 1739
Pentachlorophenol	100	88		1	88	1.8	30-137	40	04/22/2010 1739
Phenanthrene	20	17		1	86	2.6	49-122	40	04/22/2010 1739
Phenol	20	17		1	84	2.5	35-118	40	04/22/2010 1739
Pyrene	20	17		1	87	1.0	50-130	40	04/22/2010 1739

Surrogate	Q	% Rec	Acceptance Limit
2,4,6-Tribromophenol		78	41-144
2-Fluorobiphenyl		82	37-129
2-Fluorophenol		78	24-127
Nitrobenzene-d5		85	38-127
Phenol-d5		84	28-128
Terphenyl-d14		74	10-148

PQL = Practical quantitation limit
ND = Not detected at or above the MDL
P = The RPD between two GC columns exceeds 40%
J = Estimated result < PQL and ≥ MDL
N - Recovery is out of criteria
+ - RPD is out of criteria

Where applicable, all soil sample analysis are reported on a dry weight basis unless flagged with a "W"

Note: Calculations are performed before rounding to avoid round-off errors in calculated results

RCRA Metals - MB

Sample ID: LQ31320-001
Batch: 31320
Analytical Method: 6010C

Matrix: Solid
Prep Method: 3050B
Prep Date: 04/12/2010 1945

Parameter	Result	Q	Dil	PQL	MDL	Units	Analysis Date
Arsenic	ND		1	0.50	0.19	mg/kg	04/14/2010 0211
Barium	ND		1	1.3	0.091	mg/kg	04/14/2010 0211
Cadmium	0.025	J	1	0.10	0.011	mg/kg	04/14/2010 0211
Chromium	0.13	J	1	0.25	0.051	mg/kg	04/14/2010 0211
Lead	ND		1	0.50	0.093	mg/kg	04/14/2010 0211
Selenium	0.21	J	1	0.50	0.17	mg/kg	04/14/2010 0211
Silver	ND		1	0.25	0.042	mg/kg	04/14/2010 1705

PQL = Practical quantitation limit
ND = Not detected at or above the MDL
P = The RPD between two GC columns exceeds 40%
J = Estimated result < PQL and ≥ MDL
N - Recovery is out of criteria
+ - RPD is out of criteria

Where applicable, all soil sample analysis are reported on a dry weight basis unless flagged with a "W"

Note: Calculations are performed before rounding to avoid round-off errors in calculated results

RCRA Metals - LCS

Sample ID: LQ31320-002
Batch: 31320
Analytical Method: 6010C

Matrix: Solid
Prep Method: 3050B
Prep Date: 04/12/2010 1945

Parameter	Spike Amount (mg/kg)	Result (mg/kg)	Q	Dil	% Rec	% Rec Limit	Analysis Date
Arsenic	250	230		1	91	80-120	04/14/2010 0216
Barium	500	440		1	88	80-120	04/14/2010 0216
Cadmium	50	50		1	99	80-120	04/14/2010 0216
Chromium	250	240		1	97	80-120	04/14/2010 0216
Lead	250	240		1	95	80-120	04/14/2010 0216
Selenium	50	44		1	88	80-120	04/14/2010 0216
Silver	250	240		1	98	80-120	04/14/2010 1711

PQL = Practical quantitation limit
ND = Not detected at or above the MDL
P = The RPD between two GC columns exceeds 40%
J = Estimated result < PQL and ≥ MDL
N - Recovery is out of criteria
+ - RPD is out of criteria

Where applicable, all soil sample analysis are reported on a dry weight basis unless flagged with a "W"

Note: Calculations are performed before rounding to avoid round-off errors in calculated results

RCRA Metals - LCSD

Sample ID: LQ31320-003
Batch: 31320
Analytical Method: 6010C

Matrix: Solid
Prep Method: 3050B
Prep Date: 04/12/2010 1945

Parameter	Spike Amount (mg/kg)	Result (mg/kg)	Q	Dil	% Rec	% RPD	% Rec Limit	% RPD Limit	Analysis Date
Arsenic	250	230		1	91	0.29	80-120	20	04/14/2010 0221
Barium	500	440		1	89	0.73	80-120	20	04/14/2010 0221
Cadmium	50	50		1	100	0.59	80-120	20	04/14/2010 0221
Chromium	250	250		1	99	2.2	80-120	20	04/14/2010 0221
Lead	250	240		1	95	0.80	80-120	20	04/14/2010 0221
Selenium	50	45		1	89	1.6	80-120	20	04/14/2010 0221
Silver	250	250		1	99	0.77	80-120	20	04/14/2010 1717

PQL = Practical quantitation limit
ND = Not detected at or above the MDL
P = The RPD between two GC columns exceeds 40%
J = Estimated result < PQL and ≥ MDL
N - Recovery is out of criteria
+ - RPD is out of criteria

Where applicable, all soil sample analysis are reported on a dry weight basis unless flagged with a "W"

Note: Calculations are performed before rounding to avoid round-off errors in calculated results

RCRA Metals - MS

Sample ID: LD09018-028MS
Batch: 31320
Analytical Method: 6010C

Matrix: Solid
Prep Method: 3050B
Prep Date: 04/12/2010 1945

Parameter	Sample Amount (mg/kg)	Spike Amount (mg/kg)	Result (mg/kg)	Q	Dil	% Rec	% Rec Limit	Analysis Date
Arsenic	0.57	350	310		1	88	75-125	04/14/2010 0231
Barium	3.9	690	610		1	88	75-125	04/14/2010 0231
Cadmium	0.14	69	67		1	97	75-125	04/14/2010 0231
Chromium	3.0	350	320		1	93	75-125	04/14/2010 0231
Lead	3.9	350	320		1	91	75-125	04/14/2010 0231
Selenium	0.35	69	60		1	86	75-125	04/14/2010 0231
Silver	ND	350	330		1	96	75-125	04/14/2010 1729

PQL = Practical quantitation limit
ND = Not detected at or above the MDL
P = The RPD between two GC columns exceeds 40%
J = Estimated result < PQL and ≥ MDL
N - Recovery is out of criteria
+ - RPD is out of criteria

Where applicable, all soil sample analysis are reported on a dry weight basis unless flagged with a "W"

Note: Calculations are performed before rounding to avoid round-off errors in calculated results

RCRA Metals - MSD

Sample ID: LD09018-028MD
Batch: 31320
Analytical Method: 6010C

Matrix: Solid
Prep Method: 3050B
Prep Date: 04/12/2010 1945

Parameter	Sample Amount (mg/kg)	Spike Amount (mg/kg)	Result (mg/kg)	Q	Dil	% Rec	% RPD	% Rec Limit	% RPD Limit	Analysis Date
Arsenic	0.57	290	280		1	97	1.2	75-125	20	04/14/2010 0235
Barium	3.9	580	560		1	96	0.18	75-125	20	04/14/2010 0235
Cadmium	0.14	58	63		1	108	1.4	75-125	20	04/14/2010 0235
Chromium	3.0	290	310		1	105	3.1	75-125	20	04/14/2010 0235
Lead	3.9	290	320		1	110	10	75-125	20	04/14/2010 0235
Selenium	0.35	58	56		1	96	1.5	75-125	20	04/14/2010 0235
Silver	ND	290	310		1	105	0.37	75-125	20	04/14/2010 1735

PQL = Practical quantitation limit
ND = Not detected at or above the MDL
P = The RPD between two GC columns exceeds 40%
J = Estimated result < PQL and ≥ MDL
N - Recovery is out of criteria
+ - RPD is out of criteria

Where applicable, all soil sample analysis are reported on a dry weight basis unless flagged with a "W"

Note: Calculations are performed before rounding to avoid round-off errors in calculated results

RCRA Metals - MS

Sample ID: LD09018-029MS
Batch: 31320
Analytical Method: 6010C

Matrix: Solid
Prep Method: 3050B
Prep Date: 04/12/2010 1945

Parameter	Sample Amount (mg/kg)	Spike Amount (mg/kg)	Result (mg/kg)	Q	Dil	% Rec	% Rec Limit	Analysis Date
Arsenic	0.52	350	300		1	84	75-125	04/14/2010 0250
Barium	6.9	710	620		1	86	75-125	04/14/2010 0250
Cadmium	0.11	71	67		1	94	75-125	04/14/2010 0250
Chromium	1.9	350	330		1	92	75-125	04/14/2010 0250
Lead	2.6	350	320		1	88	75-125	04/14/2010 0250
Selenium	0.40	71	60		1	84	75-125	04/14/2010 0250
Silver	ND	350	340		1	95	75-125	04/14/2010 1753

PQL = Practical quantitation limit
ND = Not detected at or above the MDL
P = The RPD between two GC columns exceeds 40%
J = Estimated result < PQL and ≥ MDL
N - Recovery is out of criteria
+ - RPD is out of criteria

Where applicable, all soil sample analysis are reported on a dry weight basis unless flagged with a "W"

Note: Calculations are performed before rounding to avoid round-off errors in calculated results

RCRA Metals - MB

Sample ID: LQ31332-001
Batch: 31332
Analytical Method: 6010C

Matrix: Aqueous
Prep Method: 3005A
Prep Date: 04/12/2010 1845

Parameter	Result	Q	Dil	PQL	MDL	Units	Analysis Date
Arsenic	0.0042	J	1	0.010	0.0040	mg/L	04/13/2010 2330
Barium	ND		1	0.025	0.0075	mg/L	04/13/2010 2330
Cadmium	ND		1	0.0020	0.00060	mg/L	04/13/2010 2330
Chromium	ND		1	0.0050	0.0021	mg/L	04/13/2010 2330
Lead	ND		1	0.010	0.0019	mg/L	04/13/2010 2330
Selenium	ND		1	0.010	0.0026	mg/L	04/13/2010 2330
Silver	0.0040	J	1	0.0050	0.00040	mg/L	04/13/2010 2330

PQL = Practical quantitation limit
ND = Not detected at or above the MDL
P = The RPD between two GC columns exceeds 40%
J = Estimated result < PQL and ≥ MDL
N - Recovery is out of criteria
+ - RPD is out of criteria

Where applicable, all soil sample analysis are reported on a dry weight basis unless flagged with a "W"

Note: Calculations are performed before rounding to avoid round-off errors in calculated results

RCRA Metals - LCS

Sample ID: LQ31332-002
Batch: 31332
Analytical Method: 6010C

Matrix: Aqueous
Prep Method: 3005A
Prep Date: 04/12/2010 1845

Parameter	Spike Amount (mg/L)	Result (mg/L)	Q	Dil	% Rec	% Rec Limit	Analysis Date
Arsenic	0.40	0.39		1	98	80-120	04/13/2010 2334
Barium	2.0	1.9		1	95	80-120	04/13/2010 2334
Cadmium	0.40	0.40		1	100	80-120	04/13/2010 2334
Chromium	2.0	2.0		1	102	80-120	04/13/2010 2334
Lead	0.40	0.41		1	103	80-120	04/13/2010 2334
Selenium	0.40	0.42		1	105	80-120	04/13/2010 2334
Silver	0.40	0.37		1	93	80-120	04/13/2010 2334

PQL = Practical quantitation limit
ND = Not detected at or above the MDL
P = The RPD between two GC columns exceeds 40%
J = Estimated result < PQL and ≥ MDL
N - Recovery is out of criteria
+ - RPD is out of criteria

Where applicable, all soil sample analysis are reported on a dry weight basis unless flagged with a "W"

Note: Calculations are performed before rounding to avoid round-off errors in calculated results

RCRA Metals - LCSD

Sample ID: LQ31332-003
Batch: 31332
Analytical Method: 6010C

Matrix: Aqueous
Prep Method: 3005A
Prep Date: 04/12/2010 1845

Parameter	Spike Amount (mg/L)	Result (mg/L)	Q	Dil	% Rec	% RPD	% Rec Limit	% RPD Limit	Analysis Date
Arsenic	0.40	0.40		1	101	2.3	80-120	20	04/13/2010 2339
Barium	2.0	2.0		1	99	3.6	80-120	20	04/13/2010 2339
Cadmium	0.40	0.40		1	101	1.5	80-120	20	04/13/2010 2339
Chromium	2.0	2.1		1	104	1.7	80-120	20	04/13/2010 2339
Lead	0.40	0.42		1	105	1.8	80-120	20	04/13/2010 2339
Selenium	0.40	0.43		1	107	2.4	80-120	20	04/13/2010 2339
Silver	0.40	0.38		1	95	1.6	80-120	20	04/13/2010 2339

PQL = Practical quantitation limit
ND = Not detected at or above the MDL
P = The RPD between two GC columns exceeds 40%
J = Estimated result < PQL and ≥ MDL
N - Recovery is out of criteria
+ - RPD is out of criteria

Where applicable, all soil sample analysis are reported on a dry weight basis unless flagged with a "W"

Note: Calculations are performed before rounding to avoid round-off errors in calculated results

RCRA Metals - MB

Sample ID: LQ31319-001
Batch: 31319
Analytical Method: 7470A

Matrix: Aqueous
Prep Method: 7470A
Prep Date: 04/12/2010 1645

Parameter	Result	Q	Dil	PQL	MDL	Units	Analysis Date
Mercury	ND		1	0.00010	0.000053	mg/L	04/12/2010 2116

PQL = Practical quantitation limit
ND = Not detected at or above the MDL
P = The RPD between two GC columns exceeds 40%
J = Estimated result < PQL and ≥ MDL
N - Recovery is out of criteria
+ - RPD is out of criteria

Where applicable, all soil sample analysis are reported on a dry weight basis unless flagged with a "W"

Note: Calculations are performed before rounding to avoid round-off errors in calculated results

RCRA Metals - LCS

Sample ID: LQ31319-002
Batch: 31319
Analytical Method: 7470A

Matrix: Aqueous
Prep Method: 7470A
Prep Date: 04/12/2010 1645

Parameter	Spike Amount (mg/L)	Result (mg/L)	Q	Dil	% Rec	% Rec Limit	Analysis Date
Mercury	0.0020	0.0021		1	104	85-115	04/12/2010 2119

PQL = Practical quantitation limit
ND = Not detected at or above the MDL
P = The RPD between two GC columns exceeds 40%
J = Estimated result < PQL and ≥ MDL
N - Recovery is out of criteria
+ - RPD is out of criteria

Where applicable, all soil sample analysis are reported on a dry weight basis unless flagged with a "W"

Note: Calculations are performed before rounding to avoid round-off errors in calculated results

RCRA Metals - LCSD

Sample ID: LQ31319-003
Batch: 31319
Analytical Method: 7470A

Matrix: Aqueous
Prep Method: 7470A
Prep Date: 04/12/2010 1645

Parameter	Spike Amount (mg/L)	Result (mg/L)	Q	Dil	% Rec	% RPD	% Rec Limit	% RPD Limit	Analysis Date
Mercury	0.0020	0.0019		1	97	7.4	85-115	20	04/12/2010 2121

PQL = Practical quantitation limit
ND = Not detected at or above the MDL
P = The RPD between two GC columns exceeds 40%
J = Estimated result < PQL and ≥ MDL
N - Recovery is out of criteria
+ - RPD is out of criteria

Where applicable, all soil sample analysis are reported on a dry weight basis unless flagged with a "W"

Note: Calculations are performed before rounding to avoid round-off errors in calculated results

RCRA Metals - MS

Sample ID: LD09018-020MS
Batch: 31319
Analytical Method: 7470A

Matrix: Aqueous
Prep Method: 7470A
Prep Date: 04/12/2010 1645

Parameter	Sample Amount (mg/L)	Spike Amount (mg/L)	Result (mg/L)	Q	Dil	% Rec	% Rec Limit	Analysis Date
Mercury	ND	0.0020	0.0021		1	104	85-115	04/12/2010 2157

PQL = Practical quantitation limit
ND = Not detected at or above the MDL
P = The RPD between two GC columns exceeds 40%
J = Estimated result < PQL and ≥ MDL
N - Recovery is out of criteria
+ - RPD is out of criteria

Where applicable, all soil sample analysis are reported on a dry weight basis unless flagged with a "W"

Note: Calculations are performed before rounding to avoid round-off errors in calculated results

RCRA Metals - MB

Sample ID: LQ31322-001
Batch: 31322
Analytical Method: 7471B

Matrix: Solid
Prep Method: 7471B
Prep Date: 04/14/2010 1900

Parameter	Result	Q	Dil	PQL	MDL	Units	Analysis Date
Mercury	ND		1	0.083	0.0059	mg/kg	04/14/2010 2002

PQL = Practical quantitation limit
ND = Not detected at or above the MDL
P = The RPD between two GC columns exceeds 40%
J = Estimated result < PQL and ≥ MDL
N - Recovery is out of criteria
+ - RPD is out of criteria

Where applicable, all soil sample analysis are reported on a dry weight basis unless flagged with a "W"

Note: Calculations are performed before rounding to avoid round-off errors in calculated results

RCRA Metals - LCS

Sample ID: LQ31322-002
Batch: 31322
Analytical Method: 7471B

Matrix: Solid
Prep Method: 7471B
Prep Date: 04/14/2010 1900

Parameter	Spike Amount (mg/kg)	Result (mg/kg)	Q	Dil	% Rec	% Rec Limit	Analysis Date
Mercury	0.83	0.83		1	100	85-115	04/14/2010 2004

PQL = Practical quantitation limit
ND = Not detected at or above the MDL
P = The RPD between two GC columns exceeds 40%
J = Estimated result < PQL and ≥ MDL
N - Recovery is out of criteria
+ - RPD is out of criteria

Where applicable, all soil sample analysis are reported on a dry weight basis unless flagged with a "W"

Note: Calculations are performed before rounding to avoid round-off errors in calculated results

RCRA Metals - LCSD

Sample ID: LQ31322-003
Batch: 31322
Analytical Method: 7471B

Matrix: Solid
Prep Method: 7471B
Prep Date: 04/14/2010 1900

Parameter	Spike Amount (mg/kg)	Result (mg/kg)	Q	Dil	% Rec	% RPD	% Rec Limit	% RPD Limit	Analysis Date
Mercury	0.83	0.82		1	99	1.1	85-115	20	04/14/2010 2007

PQL = Practical quantitation limit
ND = Not detected at or above the MDL
P = The RPD between two GC columns exceeds 40%
J = Estimated result < PQL and ≥ MDL
N - Recovery is out of criteria
+ - RPD is out of criteria

Where applicable, all soil sample analysis are reported on a dry weight basis unless flagged with a "W"

Note: Calculations are performed before rounding to avoid round-off errors in calculated results

SHEALY **Chain of Custody Record**

SHEALY ENVIRONMENTAL SERVICES, INC.
106 Vantage Point Drive
West Columbia, South Carolina 29172
Telephone No. (803) 791-9700 Fax No. (803) 791-9111

Number 104880

Client: Arcadis	Report to Contact: Shelley Gibbons	Telephone No. / Fax No. / E-mail: 919-854-1282/shelley.gibbons@arcadis-us.com	Quote No.
Address: 801 Corporate Center Dr. #300	Sampler's Signature: X [signature]	Waybill No.	Page 1 of
City: Raleigh; State: NC; Zip Code: 27607	Printed Name: Josh Frizzell	Analysis (Attach list if more space is needed.)	
Project Name: FST-39			
Project No.: GP09HAFS. F39A. DG0FI; P.O. No.			Lot No.: LD19018

Sample ID / Description (Containers for each sample may be combined on one line.)	Date	Time	G=Grab C=Composite	Matrix: Aqueous	Matrix: Solid	Matrix: Non-Aqueous	No. of Containers by Preservative Type: Unpres.	H2SO4	HNO3	HCl	NaOH	5/25 KV	VOCs	SVOCs	Remarks / Cooler I.D.
F39TW05 (10-15)	4-5-10	1800	G	X			2			3			X	X	
F39TW05 (40-45)	4-5-10	1815	G	X			2			3			X	X	
F39 TW05 (20-25)	4-6-10	0945	G	X			2			3			X	X	
F39 TW05 (30-35)	4-6-10	1005	G	X			2			3			X	X	
F39 TW06 (10-15)	4-6-10	1515	G	X			2			3			X	X	
F39 TW06 (40-45)	4-6-10	1530	G	X			2			3			X	X	
F39 TW06 (20-25)	4-7-10	0810	G	X			2			3			X	X	
F39 TW06 (30-35)	4-7-10	0830	G	X			2			3			X	X	
~~F39 TW07 (10-15)~~			G	X			2			3			X	X	
DUP-4		1200	G	X			2			3			X	X	

Possible Hazard Identification: ☐ Non-Hazard ☐ Flammable ☐ Skin Irritant ☐ Poison ☒ Unknown

Sample Disposal: ☐ Return to Client ☒ Disposal by Lab

Note: All samples are retained for six weeks from receipt unless other arrangements are made.

Turn Around Time Required (Prior lab approval required for expedited TAT.): ☒ Standard ☐ Rush (Specify)

QC Requirements (Specify)

	Date	Time		Date	Time
1. Relinquished by: [signature]	4-8-10	1300	1. Received by		
2. Relinquished by: [signature]			2. Received by		
3. Relinquished by: Fed Ex	4/9/10	830	3. Laboratory received by: [signature]	4/9/10	0830

Comments

LAB USE ONLY
Received on Ice (Circle) ☒ No Ice Pack

Receipt Temp. 2.0, 1.2, 1.0, 2.2 °C

DISTRIBUTION: WHITE & YELLOW-Return to laboratory with Sample(s); PINK-Field/Client Copy

Document Number: F-AD-012 Effective Date: 08-04-02

SHEALY ENVIRONMENTAL SERVICES, INC.

SHEALY Chain of Custody Record

SHEALY ENVIRONMENTAL SERVICES, INC.
106 Vantage Point Drive
West Columbia, South Carolina 29172
Telephone No. (803) 791-9700 Fax No. (803) 791-9111

Number 104877

Client: Arcadis	Report to Contact: Shelley Gibbons	Telephone No. / Fax No. / E-mail: 919-854-1282 / shelley.gibbons@arcadis-us.com	Quote No.
Address: 801 Corporate Center Dr. #300	Sampler's Signature: X	Waybill No.	Page 2 of
City: Raleigh; State: NC; Zip Code: 27607	(Printed Name) Josh Frizzell	Analysis (Attach list if more space is needed.)	
Project Name: FST-39			
Project No.: GP09HAFS.F39A.DG0FI	P.O. No.		Lot No.: LD090/8

Sample ID / Description (Containers for each sample may be combined on one line.)	Date	Time	G=Grab C=Composite	Matrix: Aqueous	Solid	Non-Aqueous	No. of Containers by Preservative Type: Unpres.	H2SO4	HNO3	HCl	NaOH	5035 Kit	VOCs	SVOCs									Remarks / Cooler I.D.
F39TW07 (40-45)	4-7-10	1545	G	X			2			3			X	X									
F39TW07 (10-15)	4-7-10	1600	G	X			2			3			X	X									
F39TW07 (20-25)	4-8-10	0845	G	X			2			3			X	X									
F39TW07 (30-35)	4-8-10	0900	G	X			2			3			X	X									
F39TW08 (20-25)	4-8-10	1100	G	X			2			3			X	X									
F39TW08 (30-35)	4-8-10	1120	G	X			2			3			X	X									
Trip Blank	—	—	—	X			2						X										

JDF 4-8-2010

Possible Hazard Identification: ☐ Non-Hazard ☐ Flammable ☐ Skin Irritant ☐ Poison ☒ Unknown

Sample Disposal: ☐ Return to Client ☒ Disposal by Lab

Note: All samples are retained for six weeks from receipt unless other arrangements are made.

Turn Around Time Required (Prior lab approval required for expedited TAT.): ☒ Standard ☐ Rush (Specify)

QC Requirements (Specify)

	Date	Time		Date	Time
1. Relinquished by	4-8-10	1700	1. Received by		
2. Relinquished by			2. Received by		
3. Relinquished by Fed Ex	4/9/10	830	3. Laboratory received by	4/9/10	0830

Comments

LAB USE ONLY
Received on ice (Circle) Yes No Ice Pack
Receipt Temp. 2.0, 1.2, 1.9, 2.2 °C

DISTRIBUTION: WHITE & YELLOW-Return to laboratory with Sample(s); PINK-Field/Client Copy

Document Number: F-AD-012 Effective Date: 08-04-02

Shealy Environmental Services, Inc
Document Number: F-AD-016
Revision Number: 6

Page 1 of 1
Replaces Date: 09/22/06
Effective Date: 05/29/07

Sample Receipt Checklist (SRC)

Client: Arcadis Cooler Inspected by/date: WHL 4/9/10 Lot #: LD09018

Means of receipt: ☐ SESI ☐ Client ☐ UPS ☒ FedEx ☐ Airborne Exp ☐ Other

Yes ☒	No ☐	NA ☐	1. Were custody seals present on the cooler?
Yes ☒	No ☐	NA ☐	2. If custody seals were present, were they intact and unbroken?

Cooler ID/temperature upon receipt: 2.0 °C 1.2 °C 1.0 °C 2.2 °C
/ °C / °C / °C / °C

Method: ☐ Temperature Blank ☒ Against Bottles
Method of coolant: ☒ Wet Ice ☐ Blue Ice ☐ Dry Ice ☐ None

If response is No (or Yes for 14, 15, 16), an explanation/resolution must be provided.

Yes ☐	No ☐	NA ☒	3. If temperature of any cooler exceeded 6.0°C, was Project Manager notified? PM notified by SRC, phone, note (circle one), other: _____. (For coolers received via commercial courier, PMs are to be notified immediately.
Yes ☒	No ☐	NA ☐	4. Is the commercial courier's packing slip attached to this form?
Yes ☐	No ☒	NA ☐	5. Were proper custody procedures (relinquished/received) followed?
Yes ☒	No ☐	NA ☐	6. Were sample IDs listed?
Yes ☒	No ☐	NA ☐	7. Was collection date & time listed?
Yes ☒	No ☐	NA ☐	8. Were tests to be performed listed on the COC or was quote # provided?
Yes ☒	No ☐	NA ☐	9. Did all samples arrive in the proper containers for each test?
Yes ☒	No ☐	NA ☐	10. Did all container label information (ID, date, time) agree with COC?
Yes ☐	No ☒	NA ☐	11. Did all containers arrive in good condition (unbroken, lids on, etc.)?
Yes ☒	No ☐	NA ☐	12. Was adequate sample volume available?
Yes ☒	No ☐	NA ☐	13. Were all samples received within ½ the holding time or 48 hours, whichever comes first?
Yes ☒	No ☐	NA ☐	14. Were any samples containers missing? -008(1) - 1L Amber
Yes ☐	No ☒	NA ☐	15. Were there any excess samples not listed on COC?
Yes ☒	No ☐	NA ☐	16. Were bubbles present >"pea-size" (¼" or 6mm in diameter) in any VOA vials?
Yes ☐	No ☐	NA ☒	17. Were all metals/O&G/HEM/nutrient samples received at a pH of <2?
Yes ☐	No ☐	NA ☒	18. Were all cyanide and/or sulfide samples received at a pH >12?
Yes ☐	No ☐	NA ☒	19. Were all applicable NH3/TKN/cyanide/phenol/BNA/pest/PCB/herb (<0.2mg/L) and toxicity (<0.1mg/L) samples free of residual chlorine?
Yes ☒	No ☐	NA ☐	20. Were collection temperatures documented on the COC for NC samples?

Sample Preservation (Must be completed for any sample(s) incorrectly preserved or with headspace.)

Sample(s) _____ were received incorrectly preserved and were adjusted accordingly in sample receiving with _____ (H_2SO_4,HNO_3,HCl,NaOH) with the SR # (number)

Sample(s) -007(3), -010(3), -014(3) were received with bubbles >6 mm in diameter.

Sample(s) _____ were received with TRC >0.2 mg/L for NH3/TKN/cyanide/BNA/pest/PCB/herb.

Toxicity sample(s) _____ were received with TRC >0.1 mg/L and were analyzed by method 330.5.

Corrective Action taken, if necessary:

Was client notified: Yes ☐ No ☐ Did client respond: Yes ☐ No ☐

SESI employee: Date of response:

Comments: -001(2), -007(1), -009(1), -012(2), -014(1) Samples Received Broken
1L Amber 1L Amber 40mL 40mL 1L Amber
40mL

SHEALY ENVIRONMENTAL SERVICES, INC.

Chain of Custody Record

SHEALY ENVIRONMENTAL SERVICES, INC.
106 Vantage Point Drive
West Columbia, South Carolina 29172
Telephone No. (803) 791-9700 Fax No. (803) 791-9111

Number 104878

Client	Arcadis
Address	801 Corporate Center Dr. #300
City	Raleigh
State	NC
Zip Code	27607
Project Name	FST-39
Report to Contact	Shelley Gibbons
Telephone No. / Fax No. / E-mail	919-854-1282 / shelley.gibbons@arcadis-us.com
Quote No.	
Sampler's Signature	X
Printed Name	Josh Frizzell
Waybill No.	
Page	1 of
Project No.	GP09 HAFS F39A. DGOPI
P.O. No.	
Lot No.	LDL9018

Analysis (Attach list if more space is needed.)

Sample ID / Description (Containers for each sample may be combined on one line.)	Date	Time	G=Grab C=Composite	Matrix: Aqueous	Solid	Non-Aqueous	No. of Containers by Preservative Type: Unpres.	H2SO4	HNO3	HCl	NaOH	SCS Kit	VOCs	SVOCs	Remarks / Cooler I.D.
F39TW08 (10-15)	4-8-10	1420	G	X			2			3			X	X	
F39TW08 (40-45)	4-8-10	1440	G	X			2			3			X	X	

4-9-2010

Possible Hazard Identification: ☐ Non-Hazard ☐ Flammable ☐ Skin Irritant ☐ Poison ☒ Unknown

Sample Disposal: ☐ Return to Client ☒ Disposal by Lab

Note: All samples are retained for six weeks from receipt unless other arrangements are made.

Turn Around Time Required (Prior lab approval required for expedited TAT.) ☒ Standard ☐ Rush (Specify)

QC Requirements (Specify)

	Date	Time		Date	Time
1. Relinquished by	4-9-2010	1200	1. Received by		
2. Relinquished by			2. Received by		
3. Relinquished by Fed Ex	4/10/10	1000	3. Laboratory Received by	4/10/10	1000

Comments

LAB USE ONLY
Received on ice (Circle) Yes No Ice Pack
Receipt Temp. 1.0, 1.0

DISTRIBUTION: WHITE & YELLOW-Return to laboratory with Sample(s); PINK-Field/Client Copy

Document Number: F-AD-012 Effective Date: 08-04-09

SHEALY ENVIRONMENTAL SERVICES, INC.

SHEALY **Chain of Custody Record**

SHEALY ENVIRONMENTAL SERVICES, INC.
106 Vantage Point Drive
West Columbia, South Carolina 29172
Telephone No. (803) 791-9700 Fax No. (803) 791-9111

Number 103927

Client: Arcadis
Address: 801 corporate center dr. ve
City: Raleigh | State: NC | Zip Code: 27607
Project Name: F39
Project No.: GP09HAFSF39ADGOP1
P.O. No.:
Report to Contact: Shelly Gibbons
Sampler's Signature: x
Printed Name:
Telephone No. / Fax No. / E-mail: 919854 1292 shelly.gibbons@arcadis-us.com
Waybill No.:
Quote No.:
Page ____ of ____
Analysis (Attach list if more space is needed.)
Lot No.: CD 09018

Sample ID / Description (Containers for each sample may be combined on one line.)	Date 2010	Time	G=Grab C=Composite	Aqueous	Solid	Non-Aqueous	Unpres.	H2SO4	HNO3	HCl	NaOH	SOS XX	8260 VOCs	8270 SVOCs	6010 Metals	Remarks / Cooler I.D.
F39SW-01 (040810)	4/8	845	G	X						3			3	2	1	Trip blank included
~~F39sed-01 (040810)~~	4/8	—	G	X						3			~~3~~	~~2~~		
~~F39sed-02 (040810)~~	4/8	—	G	X						3			2			
F39SW-02 (040810)	4/8	1300	G	X						3			3	2	1	
F39SW-03 (040810)	4/8	1400	G	X						3			3	2	1	
F39SW-04 (040810)	4/8	1500	G	X						3			3	2	1	
F39SW-05 (040810)	4/8	1600	G	X						3			3	2	1	
F39SW-06 (040810)	4/8	1630	G	X						3			3	2	1	
F39SW-07 (040810)	4/8	1700	G	X						3			3	2	1	
Dup01 (040810)	4/8	0000	G	X						3			3	2	1	

Possible Hazard Identification: ☐ Non-Hazard ☐ Flammable ☐ Skin Irritant ☐ Poison ☐ Unknown
Sample Disposal: ☐ Return to Client ☐ Disposal by Lab
Note: All samples are retained for six weeks from receipt unless other arrangements are made.
Turn Around Time Required (Prior lab approval required for expedited TAT.): ☐ Standard ☐ Rush (Specify)
QC Requirements (Specify):

Relinquished by	Date	Time	Received by	Date	Time
1. [signature]	4/9/10	1900	1. Fedex		
2.			2.		
3. Fedex	4/10/10	1000	3. Laboratory received by [signature]	4/10/10	1000

Comments:
LAB USE ONLY
Received on ice (Circle) Yes No Ice Pack
Receipt Temp. 1.0, 1.0, 1.0

DISTRIBUTION: WHITE & YELLOW-Return to laboratory with Sample(s); PINK-Field/Client Copy

Document Number: F-AD-012 Effective Date: 08-04-08

SHEALY ENVIRONMENTAL SERVICES, INC.

SHEALY *Chain of Custody Record*

SHEALY ENVIRONMENTAL SERVICES, INC.
106 Vantage Point Drive
West Columbia, South Carolina 29172
Telephone No. (803) 791-9700 Fax No. (803) 791-9111

Number 103928

Client: Arcadis
Address: 801 Corporate Center Dr
City: Raleigh | State: NC | Zip Code: 27607
Project Name: F39
Project No.: GP09HAFS F39A DG0A1
P.O. No.:
Report to Contact:
Sampler's Signature: x Cecil Bell
Printed Name: Cecil Bell
Telephone No. / Fax No. / E-mail: 919 854 1282 shelly.gibbons@arcadis-us.com
Waybill No.:
Quote No.:
Page ____ of ____
Analysis (Attach list if more space is needed.)
Lot No.: D09018

Sample ID / Description (Containers for each sample may be combined on one line.)	Date 2010	Time	G=Grab C=Composite	Aqueous	Solid	Non Aqueous	Unpres.	H2SO4	HNO3	HCl	NaOH	5035 Kit	Metals	SVOC	VOC	Remarks / Cooler I.D.
F39 Sed 01 (040810)	4/8	900			X								1	1	4	
F39 Sed 02 (040810)	4/8	1315			X								1	1	4	
F39 Sed 03 (040810)	4/8	1415			X								1	1	4	
F39 Sed 04 (040810)	4/8	1515			X								1	1	4	
F39 Sed 05 (040810)	4/8	1615			X								1	1	4	
F39 Sed 06 (040910)	4/8	1645 ~~1615~~ 08			X								1	1	4	
F39 Sed 07 (040810)	4/8	1715			X								1	1	4	
F39 Sed 08 (040810)	4/8	1745			X								1	1	4	

Possible Hazard Identification: ☐ Non-Hazard ☐ Flammable ☐ Skin Irritant ☐ Poison ☐ Unknown
Sample Disposal: ☐ Return to Client ☐ Disposal by Lab
Note: All samples are retained for six weeks from receipt unless other arrangements are made.
Turn Around Time Required (Prior lab approval required for expedited TAT.): ☐ Standard ☐ Rush (Specify)
QC Requirements (Specify):

	Date	Time		Date	Time
1. Relinquished by: Cecil Bell	4/8/10	900	1. Received by: Fedex		
2. Relinquished by:			2. Received by:		
3. Relinquished by: Fedex	4/10/10	1000	3. Laboratory received by:	4/10/10	1000

Comments:
LAB USE ONLY
Received on ice (Circle) Yes No Ice Pack
Receipt Temp. 1.0 °C

DISTRIBUTION: WHITE & YELLOW-Return to laboratory with Sample(s); PINK-Field/Client Copy

Document Number: F-AD-012 Effective Date: 08-04-02

Shealy Environmental Services, Inc.
Document Number: F-AD-016
Revision Number: 5

Page 1 of 1
Replaces Date: 09/22/06
Effective Date: 05/29/07

Sample Receipt Checklist (SRC)

Client: Arcadis Cooler Inspected by/date: WNL / 4/10/10 Lot #: LD09018

Means of receipt: ☐ SESI ☐ Client ☐ UPS ☒ FedEx ☐ Airborne Exp ☐ Other

Yes ☒	No ☐	NA ☐	1. Were custody seals present on the cooler?
Yes ☒	No ☐	NA ☐	2. If custody seals were present, were they intact and unbroken?

Cooler ID/temperature upon receipt 1.0 °C 1.0 °C 1.0 °C 1.0 °C
/ °C / °C / °C / °C

Method: ☐ Temperature Blank ☒ Against Bottles
Method of coolant: ☒ Wet Ice ☐ Blue Ice ☐ Dry Ice ☐ None

If response is No (or Yes for 14, 15, 16), an explanation/resolution must be provided.

Yes ☐	No ☐	NA ☒	3. If temperature of any cooler exceeded 6.0°C, was Project Manager notified? PM notified by SRC, phone, note (circle one), other: _____. (For coolers received via commercial courier, PMs are to be notified immediately.
Yes ☒	No ☐	NA ☐	4. Is the commercial courier's packing slip attached to this form?
Yes ☐	No ☒	NA ☐	5. Were proper custody procedures (relinquished/received) followed?
Yes ☒	No ☐	NA ☐	6. Were sample IDs listed?
Yes ☒	No ☐	NA ☐	7. Was collection date & time listed?
Yes ☒	No ☐	NA ☐	8. Were tests to be performed listed on the COC or was quote # provided?
Yes ☒	No ☐	NA ☐	9. Did all samples arrive in the proper containers for each test?
Yes ☒	No ☐	NA ☐	10. Did all container label information (ID, date, time) agree with COC?
WNL 4/10/10 Yes ☒	No ☒	NA ☐	11. Did all containers arrive in good condition (unbroken, lids on, etc.)?
Yes ☐	No ☐	NA ☐	12. Was adequate sample volume available?
Yes ☒	No ☐	NA ☐	13. Were all samples received within ½ the holding time or 48 hours, whichever comes first?
Yes ☐	No ☒	NA ☐	14. Were any samples containers missing?
WNL 4/10/10 Yes ☒	No ☒	NA ☐	15. Were there any excess samples not listed on COC? ~~TRIP BLANK (2)~~ WNL 4/10/10
Yes ☒	No ☐	NA ☐	16. Were bubbles present >"pea-size" (¼" or 6mm in diameter) in any VOA vials?
Yes ☒	No ☐	NA ☐	17. Were all metals/O&G/HEM/nutrient samples received at a pH of <2?
Yes ☐	No ☐	NA ☒	18. Were all cyanide and/or sulfide samples received at a pH >12?
Yes ☐	No ☐	NA ☒	19. Were all applicable NH3/TKN/cyanide/phenol/BNA/pest/PCB/herb (<0.2mg/L) and toxicity (<0.1mg/L) samples free of residual chlorine?
Yes ☒	No ☐	NA ☐	20. Were collection temperatures documented on the COC for NC samples?

Sample Preservation (Must be completed for any sample(s) incorrectly preserved or with headspace.)

Sample(s) _____ were received incorrectly preserved and were adjusted accordingly in sample receiving with _____ (H_2SO_4,HNO_3,HCl,NaOH) with the SR # (number)

Sample(s) -027 (2) were received with bubbles >6 mm in diameter.

Sample(s) _____ were received with TRC >0.2 mg/L for NH3/TKN/cyanide/BNA/pest/PCB/herb.

Toxicity sample(s) _____ were received with TRC >0.1 mg/L and were analyzed by method 330.5.

Corrective Action taken, if necessary:

Was client notified: Yes ☐ No ☐ Did client respond: Yes ☐ No ☐

SESI employee: _____ Date of response: _____

Comments: -020 (1) 1L AMBER BROKEN ON RECIEPT

Report of Analysis

ARCADIS U.S., Inc.
30 Patewood Drive
Suite 155
Greenville, SC 29615
Attention: Chase Forman

Project Name: FTS39

Project Number: GP08HAFSF39DGOF1

Lot Number: LD09009

Date Completed: 04/16/2010

Nisreen Saikaly
Project Manager

This report shall not be reproduced, except in its entirety, without the written approval of Shealy Environmental Services, Inc.

The following non-paginated documents are considered part of this report: Chain of Custody Record and Sample Receipt Checklist.

* L D 0 9 0 0 9 *

Case Narrative
ARCADIS U.S., Inc.
Lot Number: LD09009

This Report of Analysis contains the analytical result(s) for the sample(s) listed on the Sample Summary following this Case Narrative. The sample receiving date is documented in the header information associated with each sample.

Sample receipt, sample analysis, and data review have been performed in accordance with the most current approved NELAC standards, the Shealy Environmental Services, Inc. ("Shealy") Quality Assurance Management Plan (QAMP), standard operating procedures (SOPs), and Shealy policies. Any exceptions to the NELAC standards, the QAMP, SOPs or policies are qualified on the results page or discussed below.

If you have any questions regarding this report please contact the Shealy Project Manager listed on the cover page.

Semivolatile Organic Compounds

The MS/MSD recoveries in batch 31258 were outside acceptance criteria. All other QA/QC criteria for the batch were within acceptance criteria and method control limits. The MS/MSD recovery results are attributed to matrix interference. The associated sample results were reported and no corrective action was required.

Sample Summary

ARCADIS U.S., Inc.

Lot Number: LD09009

Sample Number	Sample ID	Matrix	Date Sampled	Date Received
001	G4MW034 (040610)	Aqueous	04/06/2010 1400	04/09/2010
002	G4MW035 (040610)	Aqueous	04/06/2010 1630	04/09/2010
003	G4MW036 (040610)	Aqueous	04/06/2010 1845	04/09/2010
004	G4MW033 (040710)	Aqueous	04/07/2010 2000	04/09/2010
005	Trip Blank (040810)	Aqueous	04/08/2010	04/09/2010

(5 samples)

Executive Summary
ARCADIS U.S., Inc.
Lot Number: LD09009

Sample	Sample ID	Matrix	Parameter	Method	Result	Q	Units	Page
001	G4MW034 (040610)	Aqueous	Acetone	8260B	1.8	J	ug/L	5
001	G4MW034 (040610)	Aqueous	Methylene chloride	8260B	0.23	BJ	ug/L	5
001	G4MW034 (040610)	Aqueous	Trichloroethene	8260B	0.15	J	ug/L	6
001	G4MW034 (040610)	Aqueous	Arsenic	6010C	0.0049	BJ	mg/L	9
001	G4MW034 (040610)	Aqueous	Barium	6010C	0.063		mg/L	9
001	G4MW034 (040610)	Aqueous	Lead	6010C	0.0051	J	mg/L	9
001	G4MW034 (040610)	Aqueous	Silver	6010C	0.00078	BJ	mg/L	9
002	G4MW035 (040610)	Aqueous	Acetone	8260B	4.3	J	ug/L	10
002	G4MW035 (040610)	Aqueous	Chloromethane (Methyl chloride)	8260B	0.19	J	ug/L	10
002	G4MW035 (040610)	Aqueous	trans-1,2-Dichloroethene	8260B	0.31	J	ug/L	10
002	G4MW035 (040610)	Aqueous	cis-1,2-Dichloroethene	8260B	1.6		ug/L	10
002	G4MW035 (040610)	Aqueous	Methylene chloride	8260B	0.23	BJ	ug/L	10
002	G4MW035 (040610)	Aqueous	Trichloroethene	8260B	5.3		ug/L	11
002	G4MW035 (040610)	Aqueous	Barium	6010C	0.047		mg/L	14
002	G4MW035 (040610)	Aqueous	Lead	6010C	0.0040	J	mg/L	14
003	G4MW036 (040610)	Aqueous	Acetone	8260B	9.6	J	ug/L	15
003	G4MW036 (040610)	Aqueous	Carbon disulfide	8260B	0.35	J	ug/L	15
003	G4MW036 (040610)	Aqueous	Methylene chloride	8260B	0.26	BJ	ug/L	15
003	G4MW036 (040610)	Aqueous	Arsenic	6010C	0.0099	BJ	mg/L	19
003	G4MW036 (040610)	Aqueous	Barium	6010C	0.037		mg/L	19
003	G4MW036 (040610)	Aqueous	Chromium	6010C	0.0089		mg/L	19
003	G4MW036 (040610)	Aqueous	Lead	6010C	0.012		mg/L	19
004	G4MW033 (040710)	Aqueous	Acetone	8260B	3.6	J	ug/L	20
004	G4MW033 (040710)	Aqueous	Benzene	8260B	0.34	J	ug/L	20
004	G4MW033 (040710)	Aqueous	Carbon disulfide	8260B	0.34	J	ug/L	20
004	G4MW033 (040710)	Aqueous	trans-1,2-Dichloroethene	8260B	0.38	J	ug/L	20
004	G4MW033 (040710)	Aqueous	1,1-Dichloroethene	8260B	0.31	J	ug/L	20
004	G4MW033 (040710)	Aqueous	cis-1,2-Dichloroethene	8260B	4.3		ug/L	20
004	G4MW033 (040710)	Aqueous	Methylene chloride	8260B	0.24	BJ	ug/L	20
004	G4MW033 (040710)	Aqueous	Tetrachloroethene	8260B	12		ug/L	20
004	G4MW033 (040710)	Aqueous	Trichloroethene	8260B	47		ug/L	21
004	G4MW033 (040710)	Aqueous	Arsenic	6010C	0.0047	BJ	mg/L	24
004	G4MW033 (040710)	Aqueous	Barium	6010C	0.035		mg/L	24
004	G4MW033 (040710)	Aqueous	Lead	6010C	0.0019	J	mg/L	24
005	Trip Blank (040810)	Aqueous	Acetone	8260B	2.2	J	ug/L	25
005	Trip Blank (040810)	Aqueous	Methylene chloride	8260B	0.25	BJ	ug/L	25

(36 detections)

Volatile Organic Compounds by GC/MS

Client: ARCADIS U.S., Inc.
Laboratory ID: LD09009-001
Description: G4MW034 (040610)
Matrix: Aqueous
Date Sampled: 04/06/2010 1400
Date Received: 04/09/2010

Run	Prep Method	Analytical Method	Dilution	Analysis Date	Analyst	Prep Date	Batch
1	5030B	8260B	1	04/14/2010 0352	LBS		31466

Parameter	CAS Number	Analytical Method	Result	Q	PQL	MDL	Units	Run
Acetone	67-64-1	8260B	1.8	J	10	0.061	ug/L	1
Benzene	71-43-2	8260B	ND		0.50	0.027	ug/L	1
Bromodichloromethane	75-27-4	8260B	ND		0.50	0.17	ug/L	1
Bromoform	75-25-2	8260B	ND		0.50	0.010	ug/L	1
Bromomethane (Methyl bromide)	74-83-9	8260B	ND		0.50	0.20	ug/L	1
2-Butanone (MEK)	78-93-3	8260B	ND		10	2.0	ug/L	1
Carbon disulfide	75-15-0	8260B	ND		0.50	0.097	ug/L	1
Carbon tetrachloride	56-23-5	8260B	ND		0.50	0.085	ug/L	1
Chlorobenzene	108-90-7	8260B	ND		0.50	0.17	ug/L	1
Chloroethane	75-00-3	8260B	ND		0.50	0.17	ug/L	1
Chloroform	67-66-3	8260B	ND		0.50	0.17	ug/L	1
Chloromethane (Methyl chloride)	74-87-3	8260B	ND		0.50	0.17	ug/L	1
Cyclohexane	110-82-7	8260B	ND		0.50	0.30	ug/L	1
1,2-Dibromo-3-chloropropane (DBCP)	96-12-8	8260B	ND		0.50	0.069	ug/L	1
Dibromochloromethane	124-48-1	8260B	ND		0.50	0.17	ug/L	1
1,2-Dibromoethane (EDB)	106-93-4	8260B	ND		0.50	0.061	ug/L	1
1,3-Dichlorobenzene	541-73-1	8260B	ND		0.50	0.17	ug/L	1
1,2-Dichlorobenzene	95-50-1	8260B	ND		0.50	0.17	ug/L	1
1,4-Dichlorobenzene	106-46-7	8260B	ND		0.50	0.17	ug/L	1
Dichlorodifluoromethane	75-71-8	8260B	ND		0.50	0.071	ug/L	1
1,1-Dichloroethane	75-34-3	8260B	ND		0.50	0.054	ug/L	1
1,2-Dichloroethane	107-06-2	8260B	ND		0.50	0.023	ug/L	1
trans-1,2-Dichloroethene	156-60-5	8260B	ND		0.50	0.079	ug/L	1
1,1-Dichloroethene	75-35-4	8260B	ND		0.50	0.094	ug/L	1
cis-1,2-Dichloroethene	156-59-2	8260B	ND		0.50	0.087	ug/L	1
1,2-Dichloropropane	78-87-5	8260B	ND		0.50	0.081	ug/L	1
trans-1,3-Dichloropropene	10061-02-6	8260B	ND		0.50	0.18	ug/L	1
cis-1,3-Dichloropropene	10061-01-5	8260B	ND		0.50	0.090	ug/L	1
Ethylbenzene	100-41-4	8260B	ND		0.50	0.17	ug/L	1
2-Hexanone	591-78-6	8260B	ND		10	0.27	ug/L	1
Isopropylbenzene	98-82-8	8260B	ND		0.50	0.029	ug/L	1
Methyl acetate	79-20-9	8260B	ND		1.0	0.30	ug/L	1
Methyl tertiary butyl ether (MTBE)	1634-04-4	8260B	ND		0.50	0.019	ug/L	1
4-Methyl-2-pentanone	108-10-1	8260B	ND		10	0.31	ug/L	1
Methylcyclohexane	108-87-2	8260B	ND		5.0	0.95	ug/L	1
Methylene chloride	75-09-2	8260B	0.23	BJ	0.50	0.17	ug/L	1
Styrene	100-42-5	8260B	ND		0.50	0.015	ug/L	1
1,1,2,2-Tetrachloroethane	79-34-5	8260B	ND		0.50	0.013	ug/L	1
Tetrachloroethene	127-18-4	8260B	ND		0.50	0.014	ug/L	1
Toluene	108-88-3	8260B	ND		0.50	0.17	ug/L	1
1,1,2-Trichloro-1,2,2-Trifluoroethane	76-13-1	8260B	ND		0.50	0.30	ug/L	1
1,2,4-Trichlorobenzene	120-82-1	8260B	ND		0.50	0.17	ug/L	1
1,1,1-Trichloroethane	71-55-6	8260B	ND		0.50	0.029	ug/L	1
1,1,2-Trichloroethane	79-00-5	8260B	ND		0.50	0.031	ug/L	1

PQL = Practical quantitation limit
B = Detected in the method blank
E = Quantitation of compound exceeded the calibration range
ND = Not detected at or above the MDL
J = Estimated result < PQL and ≥ MDL
P = The RPD between two GC columns exceeds 40%
Where applicable, all soil sample analysis are reported on a dry weight basis unless flagged with a "W"
N = Recovery is out of criteria
H = Out of holding time

Volatile Organic Compounds by GC/MS

Client: ARCADIS U.S., Inc.
Laboratory ID: LD09009-001
Description: G4MW034 (040610)
Matrix: Aqueous
Date Sampled: 04/06/2010 1400
Date Received: 04/09/2010

Run	Prep Method	Analytical Method	Dilution	Analysis Date	Analyst	Prep Date	Batch
1	5030B	8260B	1	04/14/2010 0352	LBS		31466

Parameter	CAS Number	Analytical Method	Result	Q	PQL	MDL	Units	Run
Trichloroethene	79-01-6	8260B	0.15	J	0.50	0.024	ug/L	1
Trichlorofluoromethane	75-69-4	8260B	ND		0.50	0.051	ug/L	1
Vinyl chloride	75-01-4	8260B	ND		0.50	0.065	ug/L	1
Xylenes (total)	1330-20-7	8260B	ND		0.50	0.17	ug/L	1

Surrogate	Q	Run 1 % Recovery	Acceptance Limits
1,2-Dichloroethane-d4		105	70-130
Bromofluorobenzene		93	70-130
Toluene-d8		104	70-130

PQL = Practical quantitation limit
B = Detected in the method blank
E = Quantitation of compound exceeded the calibration range
ND = Not detected at or above the MDL
J = Estimated result < PQL and ≥ MDL
P = The RPD between two GC columns exceeds 40%
Where applicable, all soil sample analysis are reported on a dry weight basis unless flagged with a "W"
N = Recovery is out of criteria
H = Out of holding time

Semivolatile Organic Compounds by GC/MS

Client: ARCADIS U.S., Inc.
Description: G4MW034 (040610)
Date Sampled: 04/06/2010 1400
Date Received: 04/09/2010

Laboratory ID: LD09009-001
Matrix: Aqueous

Run	Prep Method	Analytical Method	Dilution	Analysis Date	Analyst	Prep Date	Batch
1	3520C	8270D	1	04/13/2010 2219	JGH	04/11/2010 1745	31258

Parameter	CAS Number	Analytical Method	Result	Q	PQL	MDL	Units	Run
Acenaphthene	83-32-9	8270D	ND		1.0	0.091	ug/L	1
Acenaphthylene	208-96-8	8270D	ND		1.0	0.16	ug/L	1
Acetophenone	98-86-2	8270D	ND		1.0	0.32	ug/L	1
Anthracene	120-12-7	8270D	ND		1.0	0.13	ug/L	1
Atrazine	1912-24-9	8270D	ND		1.0	0.20	ug/L	1
Benzaldehyde	100-52-7	8270D	ND		5.1	1.0	ug/L	1
Benzo(a)anthracene	56-55-3	8270D	ND		1.0	0.15	ug/L	1
Benzo(a)pyrene	50-32-8	8270D	ND		1.0	0.16	ug/L	1
Benzo(b)fluoranthene	205-99-2	8270D	ND		1.0	0.20	ug/L	1
Benzo(g,h,i)perylene	191-24-2	8270D	ND		1.0	0.23	ug/L	1
Benzo(k)fluoranthene	207-08-9	8270D	ND		1.0	0.12	ug/L	1
1,1'-Biphenyl	92-52-4	8270D	ND		1.0	0.20	ug/L	1
4-Bromophenyl phenyl ether	101-55-3	8270D	ND		1.0	0.12	ug/L	1
Butyl benzyl phthalate	85-68-7	8270D	ND		5.1	1.7	ug/L	1
Caprolactam	105-60-2	8270D	ND		5.1	1.2	ug/L	1
Carbazole	86-74-8	8270D	ND		1.0	0.25	ug/L	1
4-Chloro-3-methyl phenol	59-50-7	8270D	ND		1.0	0.22	ug/L	1
4-Chloroaniline	106-47-8	8270D	ND		1.0	0.13	ug/L	1
bis(2-Chloroethoxy)methane	111-91-1	8270D	ND		1.0	0.13	ug/L	1
bis(2-Chloroethyl)ether	111-44-4	8270D	ND		1.0	0.13	ug/L	1
bis(2-Chloroisopropyl)ether	108-60-1	8270D	ND		1.0	0.081	ug/L	1
2-Chloronaphthalene	91-58-7	8270D	ND		1.0	0.12	ug/L	1
2-Chlorophenol	95-57-8	8270D	ND		1.0	0.13	ug/L	1
4-Chlorophenyl phenyl ether	7005-72-3	8270D	ND		1.0	0.11	ug/L	1
Chrysene	218-01-9	8270D	ND		1.0	0.12	ug/L	1
Dibenzo(a,h)anthracene	53-70-3	8270D	ND		1.0	0.13	ug/L	1
Dibenzofuran	132-64-9	8270D	ND		1.0	0.16	ug/L	1
3,3'-Dichlorobenzidine	91-94-1	8270D	ND		5.1	0.82	ug/L	1
2,4-Dichlorophenol	120-83-2	8270D	ND		1.0	0.15	ug/L	1
Diethylphthalate	84-66-2	8270D	ND		5.1	1.7	ug/L	1
Dimethyl phthalate	131-11-3	8270D	ND		5.1	1.7	ug/L	1
2,4-Dimethylphenol	105-67-9	8270D	ND		1.0	0.31	ug/L	1
Di-n-butyl phthalate	84-74-2	8270D	ND		5.1	1.7	ug/L	1
4,6-Dinitro-2-methylphenol	534-52-1	8270D	ND		5.1	1.5	ug/L	1
2,4-Dinitrophenol	51-28-5	8270D	ND		5.1	0.25	ug/L	1
2,4-Dinitrotoluene	121-14-2	8270D	ND		2.0	0.45	ug/L	1
2,6-Dinitrotoluene	606-20-2	8270D	ND		2.0	0.40	ug/L	1
Di-n-octylphthalate	117-84-0	8270D	ND		5.1	1.7	ug/L	1
bis(2-Ethylhexyl)phthalate	117-81-7	8270D	ND		5.1	1.7	ug/L	1
Fluoranthene	206-44-0	8270D	ND		1.0	0.21	ug/L	1
Fluorene	86-73-7	8270D	ND		1.0	0.10	ug/L	1
Hexachlorobenzene	118-74-1	8270D	ND		1.0	0.21	ug/L	1
Hexachlorobutadiene	87-68-3	8270D	ND		1.0	0.091	ug/L	1
Hexachlorocyclopentadiene	77-47-4	8270D	ND		5.1	0.23	ug/L	1

PQL = Practical quantitation limit
ND = Not detected at or above the MDL
B = Detected in the method blank
J = Estimated result < PQL and ≥ MDL
E = Quantitation of compound exceeded the calibration range
P = The RPD between two GC columns exceeds 40%
Where applicable, all soil sample analysis are reported on a dry weight basis unless flagged with a "W"
N = Recovery is out of criteria
H = Out of holding time

Semivolatile Organic Compounds by GC/MS

Client: ARCADIS U.S., Inc.
Laboratory ID: LD09009-001
Description: G4MW034 (040610)
Matrix: Aqueous
Date Sampled: 04/06/2010 1400
Date Received: 04/09/2010

Run	Prep Method	Analytical Method	Dilution	Analysis Date	Analyst	Prep Date	Batch
1	3520C	8270D	1	04/13/2010 2219	JGH	04/11/2010 1745	31258

Parameter	CAS Number	Analytical Method	Result	Q	PQL	MDL	Units	Run
Hexachloroethane	67-72-1	8270D	ND		1.0	0.11	ug/L	1
Indeno(1,2,3-c,d)pyrene	193-39-5	8270D	ND		1.0	0.23	ug/L	1
Isophorone	78-59-1	8270D	ND		1.0	0.081	ug/L	1
2-Methylnaphthalene	91-57-6	8270D	ND		1.0	0.081	ug/L	1
2-Methylphenol	95-48-7	8270D	ND		1.0	0.17	ug/L	1
3 & 4-Methylphenol	106-44-5	8270D	ND		2.0	0.58	ug/L	1
Naphthalene	91-20-3	8270D	ND		1.0	0.071	ug/L	1
2-Nitroaniline	88-74-4	8270D	ND		2.0	0.56	ug/L	1
3-Nitroaniline	99-09-2	8270D	ND		2.0	0.78	ug/L	1
4-Nitroaniline	100-01-6	8270D	ND		2.0	0.39	ug/L	1
Nitrobenzene	98-95-3	8270D	ND		1.0	0.10	ug/L	1
2-Nitrophenol	88-75-5	8270D	ND		2.0	0.27	ug/L	1
4-Nitrophenol	100-02-7	8270D	ND		5.1	0.65	ug/L	1
N-Nitrosodi-n-propylamine	621-64-7	8270D	ND		1.0	0.081	ug/L	1
N-Nitrosodiphenylamine (Diphenylamine)	86-30-6	8270D	ND		1.0	0.38	ug/L	1
Pentachlorophenol	87-86-5	8270D	ND		5.1	0.55	ug/L	1
Phenanthrene	85-01-8	8270D	ND		1.0	0.18	ug/L	1
Phenol	108-95-2	8270D	ND		1.0	0.11	ug/L	1
Pyrene	129-00-0	8270D	ND		1.0	0.16	ug/L	1
2,4,5-Trichlorophenol	95-95-4	8270D	ND		1.0	0.18	ug/L	1
2,4,6-Trichlorophenol	88-06-2	8270D	ND		1.0	0.22	ug/L	1

Surrogate	Q	Run 1 % Recovery	Acceptance Limits
2-Fluorobiphenyl		50	37-129
2-Fluorophenol		39	24-127
Nitrobenzene-d5		43	38-127
Phenol-d5		42	28-128
Terphenyl-d14		50	10-148
2,4,6-Tribromophenol		65	41-144

PQL = Practical quantitation limit
B = Detected in the method blank
E = Quantitation of compound exceeded the calibration range
ND = Not detected at or above the MDL
J = Estimated result < PQL and ≥ MDL
P = The RPD between two GC columns exceeds 40%
Where applicable, all soil sample analysis are reported on a dry weight basis unless flagged with a "W"
N = Recovery is out of criteria
H = Out of holding time

RCRA Metals

Client: ARCADIS U.S., Inc.
Laboratory ID: LD09009-001
Description: G4MW034 (040610)
Matrix: Aqueous
Date Sampled: 04/06/2010 1400
Date Received: 04/09/2010

Run	Prep Method	Analytical Method	Dilution	Analysis Date	Analyst	Prep Date	Batch
1	3005A	6010C	1	04/14/2010 0038	CDF	04/12/2010 1845	31332
1		7470A	1	04/12/2010 2140	BNW	04/12/2010 1645	31319
2	3005A	6010C	1	04/14/2010 1332	KJC	04/12/2010 1845	31332

Parameter	CAS Number	Analytical Method	Result	Q	PQL	MDL	Units	Run
Arsenic	7440-38-2	6010C	0.0049	BJ	0.010	0.0040	mg/L	1
Barium	7440-39-3	6010C	0.063		0.025	0.0075	mg/L	1
Cadmium	7440-43-9	6010C	ND		0.0020	0.00060	mg/L	1
Chromium	7440-47-3	6010C	ND		0.0050	0.0021	mg/L	1
Lead	7439-92-1	6010C	0.0051	J	0.010	0.0019	mg/L	1
Mercury	7439-97-6	7470A	ND		0.00010	0.000053	mg/L	1
Selenium	7782-49-2	6010C	ND		0.010	0.0026	mg/L	1
Silver	7440-22-4	6010C	0.00078	BJ	0.0050	0.00040	mg/L	2

PQL = Practical quantitation limit
B = Detected in the method blank
E = Quantitation of compound exceeded the calibration range
ND = Not detected at or above the MDL
J = Estimated result < PQL and ≥ MDL
P = The RPD between two GC columns exceeds 40%
Where applicable, all soil sample analysis are reported on a dry weight basis unless flagged with a "W"
N = Recovery is out of criteria
H = Out of holding time

Volatile Organic Compounds by GC/MS

Client: ARCADIS U.S., Inc.
Laboratory ID: LD09009-002
Description: G4MW035 (040610)
Matrix: Aqueous
Date Sampled: 04/06/2010 1630
Date Received: 04/09/2010

Run	Prep Method	Analytical Method	Dilution	Analysis Date	Analyst	Prep Date	Batch
1	5030B	8260B	1	04/14/2010 0413	LBS		31466

Parameter	CAS Number	Analytical Method	Result	Q	PQL	MDL	Units	Run
Acetone	67-64-1	8260B	4.3	J	10	0.061	ug/L	1
Benzene	71-43-2	8260B	ND		0.50	0.027	ug/L	1
Bromodichloromethane	75-27-4	8260B	ND		0.50	0.17	ug/L	1
Bromoform	75-25-2	8260B	ND		0.50	0.010	ug/L	1
Bromomethane (Methyl bromide)	74-83-9	8260B	ND		0.50	0.20	ug/L	1
2-Butanone (MEK)	78-93-3	8260B	ND		10	2.0	ug/L	1
Carbon disulfide	75-15-0	8260B	ND		0.50	0.097	ug/L	1
Carbon tetrachloride	56-23-5	8260B	ND		0.50	0.085	ug/L	1
Chlorobenzene	108-90-7	8260B	ND		0.50	0.17	ug/L	1
Chloroethane	75-00-3	8260B	ND		0.50	0.17	ug/L	1
Chloroform	67-66-3	8260B	ND		0.50	0.17	ug/L	1
Chloromethane (Methyl chloride)	74-87-3	8260B	0.19	J	0.50	0.17	ug/L	1
Cyclohexane	110-82-7	8260B	ND		0.50	0.30	ug/L	1
1,2-Dibromo-3-chloropropane (DBCP)	96-12-8	8260B	ND		0.50	0.069	ug/L	1
Dibromochloromethane	124-48-1	8260B	ND		0.50	0.17	ug/L	1
1,2-Dibromoethane (EDB)	106-93-4	8260B	ND		0.50	0.061	ug/L	1
1,3-Dichlorobenzene	541-73-1	8260B	ND		0.50	0.17	ug/L	1
1,2-Dichlorobenzene	95-50-1	8260B	ND		0.50	0.17	ug/L	1
1,4-Dichlorobenzene	106-46-7	8260B	ND		0.50	0.17	ug/L	1
Dichlorodifluoromethane	75-71-8	8260B	ND		0.50	0.071	ug/L	1
1,1-Dichloroethane	75-34-3	8260B	ND		0.50	0.054	ug/L	1
1,2-Dichloroethane	107-06-2	8260B	ND		0.50	0.023	ug/L	1
trans-1,2-Dichloroethene	156-60-5	8260B	0.31	J	0.50	0.079	ug/L	1
1,1-Dichloroethene	75-35-4	8260B	ND		0.50	0.094	ug/L	1
cis-1,2-Dichloroethene	156-59-2	8260B	1.6		0.50	0.087	ug/L	1
1,2-Dichloropropane	78-87-5	8260B	ND		0.50	0.081	ug/L	1
trans-1,3-Dichloropropene	10061-02-6	8260B	ND		0.50	0.18	ug/L	1
cis-1,3-Dichloropropene	10061-01-5	8260B	ND		0.50	0.090	ug/L	1
Ethylbenzene	100-41-4	8260B	ND		0.50	0.17	ug/L	1
2-Hexanone	591-78-6	8260B	ND		10	0.27	ug/L	1
Isopropylbenzene	98-82-8	8260B	ND		0.50	0.029	ug/L	1
Methyl acetate	79-20-9	8260B	ND		1.0	0.30	ug/L	1
Methyl tertiary butyl ether (MTBE)	1634-04-4	8260B	ND		0.50	0.019	ug/L	1
4-Methyl-2-pentanone	108-10-1	8260B	ND		10	0.31	ug/L	1
Methylcyclohexane	108-87-2	8260B	ND		5.0	0.95	ug/L	1
Methylene chloride	75-09-2	8260B	0.23	BJ	0.50	0.17	ug/L	1
Styrene	100-42-5	8260B	ND		0.50	0.015	ug/L	1
1,1,2,2-Tetrachloroethane	79-34-5	8260B	ND		0.50	0.013	ug/L	1
Tetrachloroethene	127-18-4	8260B	ND		0.50	0.014	ug/L	1
Toluene	108-88-3	8260B	ND		0.50	0.17	ug/L	1
1,1,2-Trichloro-1,2,2-Trifluoroethane	76-13-1	8260B	ND		0.50	0.30	ug/L	1
1,2,4-Trichlorobenzene	120-82-1	8260B	ND		0.50	0.17	ug/L	1
1,1,1-Trichloroethane	71-55-6	8260B	ND		0.50	0.029	ug/L	1
1,1,2-Trichloroethane	79-00-5	8260B	ND		0.50	0.031	ug/L	1

PQL = Practical quantitation limit
B = Detected in the method blank
E = Quantitation of compound exceeded the calibration range
ND = Not detected at or above the MDL
J = Estimated result < PQL and ≥ MDL
P = The RPD between two GC columns exceeds 40%
Where applicable, all soil sample analysis are reported on a dry weight basis unless flagged with a "W"
N = Recovery is out of criteria
H = Out of holding time

Volatile Organic Compounds by GC/MS

Client: ARCADIS U.S., Inc.
Laboratory ID: LD09009-002
Description: G4MW035 (040610)
Matrix: Aqueous
Date Sampled: 04/06/2010 1630
Date Received: 04/09/2010

Run	Prep Method	Analytical Method	Dilution	Analysis Date	Analyst	Prep Date	Batch
1	5030B	8260B	1	04/14/2010 0413	LBS		31466

Parameter	CAS Number	Analytical Method	Result	Q	PQL	MDL	Units	Run
Trichloroethene	79-01-6	8260B	5.3		0.50	0.024	ug/L	1
Trichlorofluoromethane	75-69-4	8260B	ND		0.50	0.051	ug/L	1
Vinyl chloride	75-01-4	8260B	ND		0.50	0.065	ug/L	1
Xylenes (total)	1330-20-7	8260B	ND		0.50	0.17	ug/L	1

Surrogate	Q	Run 1 % Recovery	Acceptance Limits
1,2-Dichloroethane-d4		106	70-130
Bromofluorobenzene		93	70-130
Toluene-d8		106	70-130

PQL = Practical quantitation limit
B = Detected in the method blank
E = Quantitation of compound exceeded the calibration range
ND = Not detected at or above the MDL
J = Estimated result < PQL and ≥ MDL
P = The RPD between two GC columns exceeds 40%
Where applicable, all soil sample analysis are reported on a dry weight basis unless flagged with a "W"
N = Recovery is out of criteria
H = Out of holding time

Semivolatile Organic Compounds by GC/MS

Client: ARCADIS U.S., Inc.
Laboratory ID: LD09009-002
Description: G4MW035 (040610)
Matrix: Aqueous
Date Sampled: 04/06/2010 1630
Date Received: 04/09/2010

Run	Prep Method	Analytical Method	Dilution	Analysis Date	Analyst	Prep Date	Batch
1	3520C	8270D	1	04/13/2010 2316	JGH	04/11/2010 1745	31258

Parameter	CAS Number	Analytical Method	Result	Q	PQL	MDL	Units	Run
Acenaphthene	83-32-9	8270D	ND		1.0	0.091	ug/L	1
Acenaphthylene	208-96-8	8270D	ND		1.0	0.16	ug/L	1
Acetophenone	98-86-2	8270D	ND		1.0	0.32	ug/L	1
Anthracene	120-12-7	8270D	ND		1.0	0.13	ug/L	1
Atrazine	1912-24-9	8270D	ND		1.0	0.20	ug/L	1
Benzaldehyde	100-52-7	8270D	ND		5.1	1.0	ug/L	1
Benzo(a)anthracene	56-55-3	8270D	ND		1.0	0.15	ug/L	1
Benzo(a)pyrene	50-32-8	8270D	ND		1.0	0.16	ug/L	1
Benzo(b)fluoranthene	205-99-2	8270D	ND		1.0	0.20	ug/L	1
Benzo(g,h,i)perylene	191-24-2	8270D	ND		1.0	0.23	ug/L	1
Benzo(k)fluoranthene	207-08-9	8270D	ND		1.0	0.12	ug/L	1
1,1'-Biphenyl	92-52-4	8270D	ND		1.0	0.20	ug/L	1
4-Bromophenyl phenyl ether	101-55-3	8270D	ND		1.0	0.12	ug/L	1
Butyl benzyl phthalate	85-68-7	8270D	ND		5.1	1.7	ug/L	1
Caprolactam	105-60-2	8270D	ND		5.1	1.2	ug/L	1
Carbazole	86-74-8	8270D	ND		1.0	0.25	ug/L	1
4-Chloro-3-methyl phenol	59-50-7	8270D	ND		1.0	0.22	ug/L	1
4-Chloroaniline	106-47-8	8270D	ND		1.0	0.13	ug/L	1
bis(2-Chloroethoxy)methane	111-91-1	8270D	ND		1.0	0.13	ug/L	1
bis(2-Chloroethyl)ether	111-44-4	8270D	ND		1.0	0.13	ug/L	1
bis(2-Chloroisopropyl)ether	108-60-1	8270D	ND		1.0	0.081	ug/L	1
2-Chloronaphthalene	91-58-7	8270D	ND		1.0	0.12	ug/L	1
2-Chlorophenol	95-57-8	8270D	ND		1.0	0.13	ug/L	1
4-Chlorophenyl phenyl ether	7005-72-3	8270D	ND		1.0	0.11	ug/L	1
Chrysene	218-01-9	8270D	ND		1.0	0.12	ug/L	1
Dibenzo(a,h)anthracene	53-70-3	8270D	ND		1.0	0.13	ug/L	1
Dibenzofuran	132-64-9	8270D	ND		1.0	0.16	ug/L	1
3,3'-Dichlorobenzidine	91-94-1	8270D	ND		5.1	0.82	ug/L	1
2,4-Dichlorophenol	120-83-2	8270D	ND		1.0	0.15	ug/L	1
Diethylphthalate	84-66-2	8270D	ND		5.1	1.7	ug/L	1
Dimethyl phthalate	131-11-3	8270D	ND		5.1	1.7	ug/L	1
2,4-Dimethylphenol	105-67-9	8270D	ND		1.0	0.31	ug/L	1
Di-n-butyl phthalate	84-74-2	8270D	ND		5.1	1.7	ug/L	1
4,6-Dinitro-2-methylphenol	534-52-1	8270D	ND		5.1	1.5	ug/L	1
2,4-Dinitrophenol	51-28-5	8270D	ND		5.1	0.25	ug/L	1
2,4-Dinitrotoluene	121-14-2	8270D	ND		2.0	0.45	ug/L	1
2,6-Dinitrotoluene	606-20-2	8270D	ND		2.0	0.40	ug/L	1
Di-n-octylphthalate	117-84-0	8270D	ND		5.1	1.7	ug/L	1
bis(2-Ethylhexyl)phthalate	117-81-7	8270D	ND		5.1	1.7	ug/L	1
Fluoranthene	206-44-0	8270D	ND		1.0	0.21	ug/L	1
Fluorene	86-73-7	8270D	ND		1.0	0.10	ug/L	1
Hexachlorobenzene	118-74-1	8270D	ND		1.0	0.21	ug/L	1
Hexachlorobutadiene	87-68-3	8270D	ND		1.0	0.091	ug/L	1
Hexachlorocyclopentadiene	77-47-4	8270D	ND		5.1	0.23	ug/L	1

PQL = Practical quantitation limit
B = Detected in the method blank
E = Quantitation of compound exceeded the calibration range
ND = Not detected at or above the MDL
J = Estimated result < PQL and ≥ MDL
P = The RPD between two GC columns exceeds 40%
Where applicable, all soil sample analysis are reported on a dry weight basis unless flagged with a "W"
N = Recovery is out of criteria
H = Out of holding time

Semivolatile Organic Compounds by GC/MS

Client: ARCADIS U.S., Inc.
Laboratory ID: LD09009-002
Description: G4MW035 (040610)
Matrix: Aqueous
Date Sampled: 04/06/2010 1630
Date Received: 04/09/2010

Run	Prep Method	Analytical Method	Dilution	Analysis Date	Analyst	Prep Date	Batch
1	3520C	8270D	1	04/13/2010 2316	JGH	04/11/2010 1745	31258

Parameter	CAS Number	Analytical Method	Result	Q	PQL	MDL	Units	Run
Hexachloroethane	67-72-1	8270D	ND		1.0	0.11	ug/L	1
Indeno(1,2,3-c,d)pyrene	193-39-5	8270D	ND		1.0	0.23	ug/L	1
Isophorone	78-59-1	8270D	ND		1.0	0.081	ug/L	1
2-Methylnaphthalene	91-57-6	8270D	ND		1.0	0.081	ug/L	1
2-Methylphenol	95-48-7	8270D	ND		1.0	0.17	ug/L	1
3 & 4-Methylphenol	106-44-5	8270D	ND		2.0	0.58	ug/L	1
Naphthalene	91-20-3	8270D	ND		1.0	0.071	ug/L	1
2-Nitroaniline	88-74-4	8270D	ND		2.0	0.56	ug/L	1
3-Nitroaniline	99-09-2	8270D	ND		2.0	0.78	ug/L	1
4-Nitroaniline	100-01-6	8270D	ND		2.0	0.39	ug/L	1
Nitrobenzene	98-95-3	8270D	ND		1.0	0.10	ug/L	1
2-Nitrophenol	88-75-5	8270D	ND		2.0	0.27	ug/L	1
4-Nitrophenol	100-02-7	8270D	ND		5.1	0.65	ug/L	1
N-Nitrosodi-n-propylamine	621-64-7	8270D	ND		1.0	0.081	ug/L	1
N-Nitrosodiphenylamine (Diphenylamine)	86-30-6	8270D	ND		1.0	0.38	ug/L	1
Pentachlorophenol	87-86-5	8270D	ND		5.1	0.55	ug/L	1
Phenanthrene	85-01-8	8270D	ND		1.0	0.18	ug/L	1
Phenol	108-95-2	8270D	ND		1.0	0.11	ug/L	1
Pyrene	129-00-0	8270D	ND		1.0	0.16	ug/L	1
2,4,5-Trichlorophenol	95-95-4	8270D	ND		1.0	0.18	ug/L	1
2,4,6-Trichlorophenol	88-06-2	8270D	ND		1.0	0.22	ug/L	1

Surrogate	Q	Run 1 % Recovery	Acceptance Limits
2-Fluorobiphenyl		57	37-129
2-Fluorophenol		47	24-127
Nitrobenzene-d5		53	38-127
Phenol-d5		52	28-128
Terphenyl-d14		52	10-148
2,4,6-Tribromophenol		70	41-144

PQL = Practical quantitation limit
B = Detected in the method blank
E = Quantitation of compound exceeded the calibration range
ND = Not detected at or above the MDL
J = Estimated result < PQL and ≥ MDL
P = The RPD between two GC columns exceeds 40%
Where applicable, all soil sample analysis are reported on a dry weight basis unless flagged with a "W"
N = Recovery is out of criteria
H = Out of holding time

RCRA Metals

Client: ARCADIS U.S., Inc.
Laboratory ID: LD09009-002
Description: G4MW035 (040610)
Matrix: Aqueous
Date Sampled: 04/06/2010 1630
Date Received: 04/09/2010

Run	Prep Method	Analytical Method	Dilution	Analysis Date	Analyst	Prep Date	Batch
1	3005A	6010C	1	04/14/2010 0043	CDF	04/12/2010 1845	31332
1		7470A	1	04/12/2010 2143	BNW	04/12/2010 1645	31319
2	3005A	6010C	1	04/14/2010 1338	KJC	04/12/2010 1845	31332

Parameter	CAS Number	Analytical Method	Result	Q	PQL	MDL	Units	Run
Arsenic	7440-38-2	6010C	ND		0.010	0.0040	mg/L	1
Barium	7440-39-3	6010C	0.047		0.025	0.0075	mg/L	1
Cadmium	7440-43-9	6010C	ND		0.0020	0.00060	mg/L	1
Chromium	7440-47-3	6010C	ND		0.0050	0.0021	mg/L	1
Lead	7439-92-1	6010C	0.0040	J	0.010	0.0019	mg/L	1
Mercury	7439-97-6	7470A	ND		0.00010	0.000053	mg/L	1
Selenium	7782-49-2	6010C	ND		0.010	0.0026	mg/L	1
Silver	7440-22-4	6010C	ND		0.0050	0.00040	mg/L	2

PQL = Practical quantitation limit
B = Detected in the method blank
E = Quantitation of compound exceeded the calibration range
ND = Not detected at or above the MDL
J = Estimated result < PQL and ≥ MDL
P = The RPD between two GC columns exceeds 40%
Where applicable, all soil sample analysis are reported on a dry weight basis unless flagged with a "W"
N = Recovery is out of criteria
H = Out of holding time

Volatile Organic Compounds by GC/MS

Client: ARCADIS U.S., Inc.
Laboratory ID: LD09009-003
Description: G4MW036 (040610)
Matrix: Aqueous
Date Sampled: 04/06/2010 1845
Date Received: 04/09/2010

Run	Prep Method	Analytical Method	Dilution	Analysis Date	Analyst	Prep Date	Batch
1	5030B	8260B	1	04/14/2010 0435	LBS		31466

Parameter	CAS Number	Analytical Method	Result	Q	PQL	MDL	Units	Run
Acetone	67-64-1	8260B	9.6	J	10	0.061	ug/L	1
Benzene	71-43-2	8260B	ND		0.50	0.027	ug/L	1
Bromodichloromethane	75-27-4	8260B	ND		0.50	0.17	ug/L	1
Bromoform	75-25-2	8260B	ND		0.50	0.010	ug/L	1
Bromomethane (Methyl bromide)	74-83-9	8260B	ND		0.50	0.20	ug/L	1
2-Butanone (MEK)	78-93-3	8260B	ND		10	2.0	ug/L	1
Carbon disulfide	75-15-0	8260B	0.35	J	0.50	0.097	ug/L	1
Carbon tetrachloride	56-23-5	8260B	ND		0.50	0.085	ug/L	1
Chlorobenzene	108-90-7	8260B	ND		0.50	0.17	ug/L	1
Chloroethane	75-00-3	8260B	ND		0.50	0.17	ug/L	1
Chloroform	67-66-3	8260B	ND		0.50	0.17	ug/L	1
Chloromethane (Methyl chloride)	74-87-3	8260B	ND		0.50	0.17	ug/L	1
Cyclohexane	110-82-7	8260B	ND		0.50	0.30	ug/L	1
1,2-Dibromo-3-chloropropane (DBCP)	96-12-8	8260B	ND		0.50	0.069	ug/L	1
Dibromochloromethane	124-48-1	8260B	ND		0.50	0.17	ug/L	1
1,2-Dibromoethane (EDB)	106-93-4	8260B	ND		0.50	0.061	ug/L	1
1,3-Dichlorobenzene	541-73-1	8260B	ND		0.50	0.17	ug/L	1
1,2-Dichlorobenzene	95-50-1	8260B	ND		0.50	0.17	ug/L	1
1,4-Dichlorobenzene	106-46-7	8260B	ND		0.50	0.17	ug/L	1
Dichlorodifluoromethane	75-71-8	8260B	ND		0.50	0.071	ug/L	1
1,1-Dichloroethane	75-34-3	8260B	ND		0.50	0.054	ug/L	1
1,2-Dichloroethane	107-06-2	8260B	ND		0.50	0.023	ug/L	1
trans-1,2-Dichloroethene	156-60-5	8260B	ND		0.50	0.079	ug/L	1
1,1-Dichloroethene	75-35-4	8260B	ND		0.50	0.094	ug/L	1
cis-1,2-Dichloroethene	156-59-2	8260B	ND		0.50	0.087	ug/L	1
1,2-Dichloropropane	78-87-5	8260B	ND		0.50	0.081	ug/L	1
trans-1,3-Dichloropropene	10061-02-6	8260B	ND		0.50	0.18	ug/L	1
cis-1,3-Dichloropropene	10061-01-5	8260B	ND		0.50	0.090	ug/L	1
Ethylbenzene	100-41-4	8260B	ND		0.50	0.17	ug/L	1
2-Hexanone	591-78-6	8260B	ND		10	0.27	ug/L	1
Isopropylbenzene	98-82-8	8260B	ND		0.50	0.029	ug/L	1
Methyl acetate	79-20-9	8260B	ND		1.0	0.30	ug/L	1
Methyl tertiary butyl ether (MTBE)	1634-04-4	8260B	ND		0.50	0.019	ug/L	1
4-Methyl-2-pentanone	108-10-1	8260B	ND		10	0.31	ug/L	1
Methylcyclohexane	108-87-2	8260B	ND		5.0	0.95	ug/L	1
Methylene chloride	75-09-2	8260B	0.26	BJ	0.50	0.17	ug/L	1
Styrene	100-42-5	8260B	ND		0.50	0.015	ug/L	1
1,1,2,2-Tetrachloroethane	79-34-5	8260B	ND		0.50	0.013	ug/L	1
Tetrachloroethene	127-18-4	8260B	ND		0.50	0.014	ug/L	1
Toluene	108-88-3	8260B	ND		0.50	0.17	ug/L	1
1,1,2-Trichloro-1,2,2-Trifluoroethane	76-13-1	8260B	ND		0.50	0.30	ug/L	1
1,2,4-Trichlorobenzene	120-82-1	8260B	ND		0.50	0.17	ug/L	1
1,1,1-Trichloroethane	71-55-6	8260B	ND		0.50	0.029	ug/L	1
1,1,2-Trichloroethane	79-00-5	8260B	ND		0.50	0.031	ug/L	1

PQL = Practical quantitation limit
B = Detected in the method blank
E = Quantitation of compound exceeded the calibration range
ND = Not detected at or above the MDL
J = Estimated result < PQL and ≥ MDL
P = The RPD between two GC columns exceeds 40%
Where applicable, all soil sample analysis are reported on a dry weight basis unless flagged with a "W"
N = Recovery is out of criteria
H = Out of holding time

Volatile Organic Compounds by GC/MS

Client: ARCADIS U.S., Inc.
Laboratory ID: LD09009-003
Description: G4MW036 (040610)
Matrix: Aqueous
Date Sampled: 04/06/2010 1845
Date Received: 04/09/2010

Run	Prep Method	Analytical Method	Dilution	Analysis Date	Analyst	Prep Date	Batch
1	5030B	8260B	1	04/14/2010 0435	LBS		31466

Parameter	CAS Number	Analytical Method	Result	Q	PQL	MDL	Units	Run
Trichloroethene	79-01-6	8260B	ND		0.50	0.024	ug/L	1
Trichlorofluoromethane	75-69-4	8260B	ND		0.50	0.051	ug/L	1
Vinyl chloride	75-01-4	8260B	ND		0.50	0.065	ug/L	1
Xylenes (total)	1330-20-7	8260B	ND		0.50	0.17	ug/L	1

Surrogate	Q	Run 1 % Recovery	Acceptance Limits
1,2-Dichloroethane-d4		108	70-130
Bromofluorobenzene		93	70-130
Toluene-d8		106	70-130

PQL = Practical quantitation limit
B = Detected in the method blank
E = Quantitation of compound exceeded the calibration range
ND = Not detected at or above the MDL
J = Estimated result < PQL and ≥ MDL
P = The RPD between two GC columns exceeds 40%
Where applicable, all soil sample analysis are reported on a dry weight basis unless flagged with a "W"
N = Recovery is out of criteria
H = Out of holding time

Semivolatile Organic Compounds by GC/MS

Client: ARCADIS U.S., Inc.
Description: G4MW036 (040610)
Date Sampled: 04/06/2010 1845
Date Received: 04/09/2010

Laboratory ID: LD09009-003
Matrix: Aqueous

Run	Prep Method	Analytical Method	Dilution	Analysis Date	Analyst	Prep Date	Batch
1	3520C	8270D	1	04/15/2010 1929	JGH	04/11/2010 1745	31258

Parameter	CAS Number	Analytical Method	Result	Q	PQL	MDL	Units	Run
Acenaphthene	83-32-9	8270D	ND		1.0	0.092	ug/L	1
Acenaphthylene	208-96-8	8270D	ND		1.0	0.16	ug/L	1
Acetophenone	98-86-2	8270D	ND		1.0	0.33	ug/L	1
Anthracene	120-12-7	8270D	ND		1.0	0.13	ug/L	1
Atrazine	1912-24-9	8270D	ND		1.0	0.20	ug/L	1
Benzaldehyde	100-52-7	8270D	ND		5.1	1.0	ug/L	1
Benzo(a)anthracene	56-55-3	8270D	ND		1.0	0.15	ug/L	1
Benzo(a)pyrene	50-32-8	8270D	ND		1.0	0.16	ug/L	1
Benzo(b)fluoranthene	205-99-2	8270D	ND		1.0	0.20	ug/L	1
Benzo(g,h,i)perylene	191-24-2	8270D	ND		1.0	0.23	ug/L	1
Benzo(k)fluoranthene	207-08-9	8270D	ND		1.0	0.12	ug/L	1
1,1'-Biphenyl	92-52-4	8270D	ND		1.0	0.20	ug/L	1
4-Bromophenyl phenyl ether	101-55-3	8270D	ND		1.0	0.12	ug/L	1
Butyl benzyl phthalate	85-68-7	8270D	ND		5.1	1.7	ug/L	1
Caprolactam	105-60-2	8270D	ND		5.1	1.2	ug/L	1
Carbazole	86-74-8	8270D	ND		1.0	0.26	ug/L	1
4-Chloro-3-methyl phenol	59-50-7	8270D	ND		1.0	0.22	ug/L	1
4-Chloroaniline	106-47-8	8270D	ND		1.0	0.13	ug/L	1
bis(2-Chloroethoxy)methane	111-91-1	8270D	ND		1.0	0.13	ug/L	1
bis(2-Chloroethyl)ether	111-44-4	8270D	ND		1.0	0.13	ug/L	1
bis(2-Chloroisopropyl)ether	108-60-1	8270D	ND		1.0	0.082	ug/L	1
2-Chloronaphthalene	91-58-7	8270D	ND		1.0	0.12	ug/L	1
2-Chlorophenol	95-57-8	8270D	ND		1.0	0.13	ug/L	1
4-Chlorophenyl phenyl ether	7005-72-3	8270D	ND		1.0	0.11	ug/L	1
Chrysene	218-01-9	8270D	ND		1.0	0.12	ug/L	1
Dibenzo(a,h)anthracene	53-70-3	8270D	ND		1.0	0.13	ug/L	1
Dibenzofuran	132-64-9	8270D	ND		1.0	0.16	ug/L	1
3,3'-Dichlorobenzidine	91-94-1	8270D	ND		5.1	0.83	ug/L	1
2,4-Dichlorophenol	120-83-2	8270D	ND		1.0	0.15	ug/L	1
Diethylphthalate	84-66-2	8270D	ND		5.1	1.7	ug/L	1
Dimethyl phthalate	131-11-3	8270D	ND		5.1	1.7	ug/L	1
2,4-Dimethylphenol	105-67-9	8270D	ND		1.0	0.32	ug/L	1
Di-n-butyl phthalate	84-74-2	8270D	ND		5.1	1.7	ug/L	1
4,6-Dinitro-2-methylphenol	534-52-1	8270D	ND		5.1	1.5	ug/L	1
2,4-Dinitrophenol	51-28-5	8270D	ND		5.1	0.26	ug/L	1
2,4-Dinitrotoluene	121-14-2	8270D	ND		2.0	0.46	ug/L	1
2,6-Dinitrotoluene	606-20-2	8270D	ND		2.0	0.41	ug/L	1
Di-n-octylphthalate	117-84-0	8270D	ND		5.1	1.7	ug/L	1
bis(2-Ethylhexyl)phthalate	117-81-7	8270D	ND		5.1	1.7	ug/L	1
Fluoranthene	206-44-0	8270D	ND		1.0	0.21	ug/L	1
Fluorene	86-73-7	8270D	ND		1.0	0.10	ug/L	1
Hexachlorobenzene	118-74-1	8270D	ND		1.0	0.21	ug/L	1
Hexachlorobutadiene	87-68-3	8270D	ND		1.0	0.092	ug/L	1
Hexachlorocyclopentadiene	77-47-4	8270D	ND		5.1	0.23	ug/L	1

PQL = Practical quantitation limit
ND = Not detected at or above the MDL
Where applicable, all soil sample analysis are reported on a dry weight basis unless flagged with a "W"
B = Detected in the method blank
J = Estimated result < PQL and ≥ MDL
E = Quantitation of compound exceeded the calibration range
P = The RPD between two GC columns exceeds 40%
N = Recovery is out of criteria
H = Out of holding time

Semivolatile Organic Compounds by GC/MS

Client: ARCADIS U.S., Inc.
Laboratory ID: LD09009-003
Description: G4MW036 (040610)
Matrix: Aqueous
Date Sampled: 04/06/2010 1845
Date Received: 04/09/2010

Run	Prep Method	Analytical Method	Dilution	Analysis Date	Analyst	Prep Date	Batch
1	3520C	8270D	1	04/15/2010 1929	JGH	04/11/2010 1745	31258

Parameter	CAS Number	Analytical Method	Result	Q	PQL	MDL	Units	Run
Hexachloroethane	67-72-1	8270D	ND		1.0	0.11	ug/L	1
Indeno(1,2,3-c,d)pyrene	193-39-5	8270D	ND		1.0	0.23	ug/L	1
Isophorone	78-59-1	8270D	ND		1.0	0.082	ug/L	1
2-Methylnaphthalene	91-57-6	8270D	ND		1.0	0.082	ug/L	1
2-Methylphenol	95-48-7	8270D	ND		1.0	0.17	ug/L	1
3 & 4-Methylphenol	106-44-5	8270D	ND		2.0	0.58	ug/L	1
Naphthalene	91-20-3	8270D	ND		1.0	0.071	ug/L	1
2-Nitroaniline	88-74-4	8270D	ND		2.0	0.56	ug/L	1
3-Nitroaniline	99-09-2	8270D	ND		2.0	0.79	ug/L	1
4-Nitroaniline	100-01-6	8270D	ND		2.0	0.40	ug/L	1
Nitrobenzene	98-95-3	8270D	ND		1.0	0.10	ug/L	1
2-Nitrophenol	88-75-5	8270D	ND		2.0	0.28	ug/L	1
4-Nitrophenol	100-02-7	8270D	ND		5.1	0.65	ug/L	1
N-Nitrosodi-n-propylamine	621-64-7	8270D	ND		1.0	0.082	ug/L	1
N-Nitrosodiphenylamine (Diphenylamine)	86-30-6	8270D	ND		1.0	0.39	ug/L	1
Pentachlorophenol	87-86-5	8270D	ND		5.1	0.55	ug/L	1
Phenanthrene	85-01-8	8270D	ND		1.0	0.18	ug/L	1
Phenol	108-95-2	8270D	ND		1.0	0.11	ug/L	1
Pyrene	129-00-0	8270D	ND		1.0	0.16	ug/L	1
2,4,5-Trichlorophenol	95-95-4	8270D	ND		1.0	0.18	ug/L	1
2,4,6-Trichlorophenol	88-06-2	8270D	ND		1.0	0.22	ug/L	1

Surrogate	Q	Run 1 % Recovery	Acceptance Limits
2-Fluorobiphenyl		56	37-129
2-Fluorophenol		49	24-127
Nitrobenzene-d5		56	38-127
Phenol-d5		47	28-128
Terphenyl-d14		79	10-148
2,4,6-Tribromophenol		112	41-144

PQL = Practical quantitation limit
B = Detected in the method blank
E = Quantitation of compound exceeded the calibration range
ND = Not detected at or above the MDL
J = Estimated result < PQL and ≥ MDL
P = The RPD between two GC columns exceeds 40%
Where applicable, all soil sample analysis are reported on a dry weight basis unless flagged with a "W"
N = Recovery is out of criteria
H = Out of holding time

RCRA Metals

Client: ARCADIS U.S., Inc.
Description: G4MW036 (040610)
Date Sampled: 04/06/2010 1845
Date Received: 04/09/2010

Laboratory ID: LD09009-003
Matrix: Aqueous

Run	Prep Method	Analytical Method	Dilution	Analysis Date	Analyst	Prep Date	Batch
1	3005A	6010C	1	04/14/2010 0048	CDF	04/12/2010 1845	31332
1		7470A	1	04/12/2010 2145	BNW	04/12/2010 1645	31319
2	3005A	6010C	1	04/14/2010 1344	KJC	04/12/2010 1845	31332

Parameter	CAS Number	Analytical Method	Result	Q	PQL	MDL	Units	Run
Arsenic	7440-38-2	6010C	0.0099	BJ	0.010	0.0040	mg/L	2
Barium	7440-39-3	6010C	0.037		0.025	0.0075	mg/L	1
Cadmium	7440-43-9	6010C	ND		0.0020	0.00060	mg/L	1
Chromium	7440-47-3	6010C	0.0089		0.0050	0.0021	mg/L	1
Lead	7439-92-1	6010C	0.012		0.010	0.0019	mg/L	1
Mercury	7439-97-6	7470A	ND		0.00010	0.000053	mg/L	1
Selenium	7782-49-2	6010C	ND		0.010	0.0026	mg/L	1
Silver	7440-22-4	6010C	ND		0.0050	0.00040	mg/L	2

PQL = Practical quantitation limit
ND = Not detected at or above the MDL
Where applicable, all soil sample analysis are reported on a dry weight basis unless flagged with a "W"
B = Detected in the method blank
J = Estimated result < PQL and ≥ MDL
E = Quantitation of compound exceeded the calibration range
P = The RPD between two GC columns exceeds 40%
N = Recovery is out of criteria
H = Out of holding time

Volatile Organic Compounds by GC/MS

Client: ARCADIS U.S., Inc.
Laboratory ID: LD09009-004
Description: G4MW033 (040710)
Matrix: Aqueous
Date Sampled: 04/07/2010 2000
Date Received: 04/09/2010

Run	Prep Method	Analytical Method	Dilution	Analysis Date	Analyst	Prep Date	Batch
1	5030B	8260B	1	04/14/2010 0457	LBS		31466

Parameter	CAS Number	Analytical Method	Result	Q	PQL	MDL	Units	Run
Acetone	67-64-1	8260B	3.6	J	10	0.061	ug/L	1
Benzene	71-43-2	8260B	0.34	J	0.50	0.027	ug/L	1
Bromodichloromethane	75-27-4	8260B	ND		0.50	0.17	ug/L	1
Bromoform	75-25-2	8260B	ND		0.50	0.010	ug/L	1
Bromomethane (Methyl bromide)	74-83-9	8260B	ND		0.50	0.20	ug/L	1
2-Butanone (MEK)	78-93-3	8260B	ND		10	2.0	ug/L	1
Carbon disulfide	75-15-0	8260B	0.34	J	0.50	0.097	ug/L	1
Carbon tetrachloride	56-23-5	8260B	ND		0.50	0.085	ug/L	1
Chlorobenzene	108-90-7	8260B	ND		0.50	0.17	ug/L	1
Chloroethane	75-00-3	8260B	ND		0.50	0.17	ug/L	1
Chloroform	67-66-3	8260B	ND		0.50	0.17	ug/L	1
Chloromethane (Methyl chloride)	74-87-3	8260B	ND		0.50	0.17	ug/L	1
Cyclohexane	110-82-7	8260B	ND		0.50	0.30	ug/L	1
1,2-Dibromo-3-chloropropane (DBCP)	96-12-8	8260B	ND		0.50	0.069	ug/L	1
Dibromochloromethane	124-48-1	8260B	ND		0.50	0.17	ug/L	1
1,2-Dibromoethane (EDB)	106-93-4	8260B	ND		0.50	0.061	ug/L	1
1,3-Dichlorobenzene	541-73-1	8260B	ND		0.50	0.17	ug/L	1
1,2-Dichlorobenzene	95-50-1	8260B	ND		0.50	0.17	ug/L	1
1,4-Dichlorobenzene	106-46-7	8260B	ND		0.50	0.17	ug/L	1
Dichlorodifluoromethane	75-71-8	8260B	ND		0.50	0.071	ug/L	1
1,1-Dichloroethane	75-34-3	8260B	ND		0.50	0.054	ug/L	1
1,2-Dichloroethane	107-06-2	8260B	ND		0.50	0.023	ug/L	1
trans-1,2-Dichloroethene	156-60-5	8260B	0.38	J	0.50	0.079	ug/L	1
1,1-Dichloroethene	75-35-4	8260B	0.31	J	0.50	0.094	ug/L	1
cis-1,2-Dichloroethene	156-59-2	8260B	4.3		0.50	0.087	ug/L	1
1,2-Dichloropropane	78-87-5	8260B	ND		0.50	0.081	ug/L	1
trans-1,3-Dichloropropene	10061-02-6	8260B	ND		0.50	0.18	ug/L	1
cis-1,3-Dichloropropene	10061-01-5	8260B	ND		0.50	0.090	ug/L	1
Ethylbenzene	100-41-4	8260B	ND		0.50	0.17	ug/L	1
2-Hexanone	591-78-6	8260B	ND		10	0.27	ug/L	1
Isopropylbenzene	98-82-8	8260B	ND		0.50	0.029	ug/L	1
Methyl acetate	79-20-9	8260B	ND		1.0	0.30	ug/L	1
Methyl tertiary butyl ether (MTBE)	1634-04-4	8260B	ND		0.50	0.019	ug/L	1
4-Methyl-2-pentanone	108-10-1	8260B	ND		10	0.31	ug/L	1
Methylcyclohexane	108-87-2	8260B	ND		5.0	0.95	ug/L	1
Methylene chloride	75-09-2	8260B	0.24	BJ	0.50	0.17	ug/L	1
Styrene	100-42-5	8260B	ND		0.50	0.015	ug/L	1
1,1,2,2-Tetrachloroethane	79-34-5	8260B	ND		0.50	0.013	ug/L	1
Tetrachloroethene	127-18-4	8260B	12		0.50	0.014	ug/L	1
Toluene	108-88-3	8260B	ND		0.50	0.17	ug/L	1
1,1,2-Trichloro-1,2,2-Trifluoroethane	76-13-1	8260B	ND		0.50	0.30	ug/L	1
1,2,4-Trichlorobenzene	120-82-1	8260B	ND		0.50	0.17	ug/L	1
1,1,1-Trichloroethane	71-55-6	8260B	ND		0.50	0.029	ug/L	1
1,1,2-Trichloroethane	79-00-5	8260B	ND		0.50	0.031	ug/L	1

PQL = Practical quantitation limit
B = Detected in the method blank
E = Quantitation of compound exceeded the calibration range
ND = Not detected at or above the MDL
J = Estimated result < PQL and ≥ MDL
P = The RPD between two GC columns exceeds 40%
Where applicable, all soil sample analysis are reported on a dry weight basis unless flagged with a "W"
N = Recovery is out of criteria
H = Out of holding time

Volatile Organic Compounds by GC/MS

Client: ARCADIS U.S., Inc.
Laboratory ID: LD09009-004
Description: G4MW033 (040710)
Matrix: Aqueous
Date Sampled: 04/07/2010 2000
Date Received: 04/09/2010

Run	Prep Method	Analytical Method	Dilution	Analysis Date	Analyst	Prep Date	Batch
1	5030B	8260B	1	04/14/2010 0457	LBS		31466

Parameter	CAS Number	Analytical Method	Result	Q	PQL	MDL	Units	Run
Trichloroethene	79-01-6	8260B	47		0.50	0.024	ug/L	1
Trichlorofluoromethane	75-69-4	8260B	ND		0.50	0.051	ug/L	1
Vinyl chloride	75-01-4	8260B	ND		0.50	0.065	ug/L	1
Xylenes (total)	1330-20-7	8260B	ND		0.50	0.17	ug/L	1

Surrogate	Q	Run 1 % Recovery	Acceptance Limits
1,2-Dichloroethane-d4		106	70-130
Bromofluorobenzene		92	70-130
Toluene-d8		106	70-130

PQL = Practical quantitation limit
B = Detected in the method blank
E = Quantitation of compound exceeded the calibration range
ND = Not detected at or above the MDL
J = Estimated result < PQL and ≥ MDL
P = The RPD between two GC columns exceeds 40%
Where applicable, all soil sample analysis are reported on a dry weight basis unless flagged with a "W"
N = Recovery is out of criteria
H = Out of holding time

Semivolatile Organic Compounds by GC/MS

Client: ARCADIS U.S., Inc.
Laboratory ID: LD09009-004
Description: G4MW033 (040710)
Matrix: Aqueous
Date Sampled: 04/07/2010 2000
Date Received: 04/09/2010

Run	Prep Method	Analytical Method	Dilution	Analysis Date	Analyst	Prep Date	Batch
1	3520C	8270D	1	04/13/2010 2355	JGH	04/11/2010 1745	31258

Parameter	CAS Number	Analytical Method	Result	Q	PQL	MDL	Units	Run
Acenaphthene	83-32-9	8270D	ND		1.0	0.091	ug/L	1
Acenaphthylene	208-96-8	8270D	ND		1.0	0.16	ug/L	1
Acetophenone	98-86-2	8270D	ND		1.0	0.32	ug/L	1
Anthracene	120-12-7	8270D	ND		1.0	0.13	ug/L	1
Atrazine	1912-24-9	8270D	ND		1.0	0.20	ug/L	1
Benzaldehyde	100-52-7	8270D	ND		5.1	1.0	ug/L	1
Benzo(a)anthracene	56-55-3	8270D	ND		1.0	0.15	ug/L	1
Benzo(a)pyrene	50-32-8	8270D	ND		1.0	0.16	ug/L	1
Benzo(b)fluoranthene	205-99-2	8270D	ND		1.0	0.20	ug/L	1
Benzo(g,h,i)perylene	191-24-2	8270D	ND		1.0	0.23	ug/L	1
Benzo(k)fluoranthene	207-08-9	8270D	ND		1.0	0.12	ug/L	1
1,1'-Biphenyl	92-52-4	8270D	ND		1.0	0.20	ug/L	1
4-Bromophenyl phenyl ether	101-55-3	8270D	ND		1.0	0.12	ug/L	1
Butyl benzyl phthalate	85-68-7	8270D	ND		5.1	1.7	ug/L	1
Caprolactam	105-60-2	8270D	ND		5.1	1.2	ug/L	1
Carbazole	86-74-8	8270D	ND		1.0	0.25	ug/L	1
4-Chloro-3-methyl phenol	59-50-7	8270D	ND		1.0	0.22	ug/L	1
4-Chloroaniline	106-47-8	8270D	ND		1.0	0.13	ug/L	1
bis(2-Chloroethoxy)methane	111-91-1	8270D	ND		1.0	0.13	ug/L	1
bis(2-Chloroethyl)ether	111-44-4	8270D	ND		1.0	0.13	ug/L	1
bis(2-Chloroisopropyl)ether	108-60-1	8270D	ND		1.0	0.081	ug/L	1
2-Chloronaphthalene	91-58-7	8270D	ND		1.0	0.12	ug/L	1
2-Chlorophenol	95-57-8	8270D	ND		1.0	0.13	ug/L	1
4-Chlorophenyl phenyl ether	7005-72-3	8270D	ND		1.0	0.11	ug/L	1
Chrysene	218-01-9	8270D	ND		1.0	0.12	ug/L	1
Dibenzo(a,h)anthracene	53-70-3	8270D	ND		1.0	0.13	ug/L	1
Dibenzofuran	132-64-9	8270D	ND		1.0	0.16	ug/L	1
3,3'-Dichlorobenzidine	91-94-1	8270D	ND		5.1	0.82	ug/L	1
2,4-Dichlorophenol	120-83-2	8270D	ND		1.0	0.15	ug/L	1
Diethylphthalate	84-66-2	8270D	ND		5.1	1.7	ug/L	1
Dimethyl phthalate	131-11-3	8270D	ND		5.1	1.7	ug/L	1
2,4-Dimethylphenol	105-67-9	8270D	ND		1.0	0.31	ug/L	1
Di-n-butyl phthalate	84-74-2	8270D	ND		5.1	1.7	ug/L	1
4,6-Dinitro-2-methylphenol	534-52-1	8270D	ND		5.1	1.5	ug/L	1
2,4-Dinitrophenol	51-28-5	8270D	ND		5.1	0.25	ug/L	1
2,4-Dinitrotoluene	121-14-2	8270D	ND		2.0	0.45	ug/L	1
2,6-Dinitrotoluene	606-20-2	8270D	ND		2.0	0.40	ug/L	1
Di-n-octylphthalate	117-84-0	8270D	ND		5.1	1.7	ug/L	1
bis(2-Ethylhexyl)phthalate	117-81-7	8270D	ND		5.1	1.7	ug/L	1
Fluoranthene	206-44-0	8270D	ND		1.0	0.21	ug/L	1
Fluorene	86-73-7	8270D	ND		1.0	0.10	ug/L	1
Hexachlorobenzene	118-74-1	8270D	ND		1.0	0.21	ug/L	1
Hexachlorobutadiene	87-68-3	8270D	ND		1.0	0.091	ug/L	1
Hexachlorocyclopentadiene	77-47-4	8270D	ND		5.1	0.23	ug/L	1

PQL = Practical quantitation limit
B = Detected in the method blank
E = Quantitation of compound exceeded the calibration range
ND = Not detected at or above the MDL
J = Estimated result < PQL and ≥ MDL
P = The RPD between two GC columns exceeds 40%
Where applicable, all soil sample analysis are reported on a dry weight basis unless flagged with a "W"
N = Recovery is out of criteria
H = Out of holding time

Semivolatile Organic Compounds by GC/MS

Client: ARCADIS U.S., Inc.
Laboratory ID: LD09009-004
Description: G4MW033 (040710)
Matrix: Aqueous
Date Sampled: 04/07/2010 2000
Date Received: 04/09/2010

Run	Prep Method	Analytical Method	Dilution	Analysis Date	Analyst	Prep Date	Batch
1	3520C	8270D	1	04/13/2010 2355	JGH	04/11/2010 1745	31258

Parameter	CAS Number	Analytical Method	Result	Q	PQL	MDL	Units	Run
Hexachloroethane	67-72-1	8270D	ND		1.0	0.11	ug/L	1
Indeno(1,2,3-c,d)pyrene	193-39-5	8270D	ND		1.0	0.23	ug/L	1
Isophorone	78-59-1	8270D	ND		1.0	0.081	ug/L	1
2-Methylnaphthalene	91-57-6	8270D	ND		1.0	0.081	ug/L	1
2-Methylphenol	95-48-7	8270D	ND		1.0	0.17	ug/L	1
3 & 4-Methylphenol	106-44-5	8270D	ND		2.0	0.58	ug/L	1
Naphthalene	91-20-3	8270D	ND		1.0	0.071	ug/L	1
2-Nitroaniline	88-74-4	8270D	ND		2.0	0.56	ug/L	1
3-Nitroaniline	99-09-2	8270D	ND		2.0	0.78	ug/L	1
4-Nitroaniline	100-01-6	8270D	ND		2.0	0.39	ug/L	1
Nitrobenzene	98-95-3	8270D	ND		1.0	0.10	ug/L	1
2-Nitrophenol	88-75-5	8270D	ND		2.0	0.27	ug/L	1
4-Nitrophenol	100-02-7	8270D	ND		5.1	0.65	ug/L	1
N-Nitrosodi-n-propylamine	621-64-7	8270D	ND		1.0	0.081	ug/L	1
N-Nitrosodiphenylamine (Diphenylamine)	86-30-6	8270D	ND		1.0	0.38	ug/L	1
Pentachlorophenol	87-86-5	8270D	ND		5.1	0.55	ug/L	1
Phenanthrene	85-01-8	8270D	ND		1.0	0.18	ug/L	1
Phenol	108-95-2	8270D	ND		1.0	0.11	ug/L	1
Pyrene	129-00-0	8270D	ND		1.0	0.16	ug/L	1
2,4,5-Trichlorophenol	95-95-4	8270D	ND		1.0	0.18	ug/L	1
2,4,6-Trichlorophenol	88-06-2	8270D	ND		1.0	0.22	ug/L	1

Surrogate	Q	Run 1 % Recovery	Acceptance Limits
2-Fluorobiphenyl		44	37-129
2-Fluorophenol		41	24-127
Nitrobenzene-d5		50	38-127
Phenol-d5		43	28-128
Terphenyl-d14		41	10-148
2,4,6-Tribromophenol		58	41-144

PQL = Practical quantitation limit
B = Detected in the method blank
E = Quantitation of compound exceeded the calibration range
ND = Not detected at or above the MDL
J = Estimated result < PQL and ≥ MDL
P = The RPD between two GC columns exceeds 40%
Where applicable, all soil sample analysis are reported on a dry weight basis unless flagged with a "W"
N = Recovery is out of criteria
H = Out of holding time

RCRA Metals

Client: ARCADIS U.S., Inc.
Laboratory ID: LD09009-004
Description: G4MW033 (040710)
Matrix: Aqueous
Date Sampled: 04/07/2010 2000
Date Received: 04/09/2010

Run	Prep Method	Analytical Method	Dilution	Analysis Date	Analyst	Prep Date	Batch
1	3005A	6010C	1	04/14/2010 0053	CDF	04/12/2010 1845	31332
1		7470A	1	04/12/2010 2148	BNW	04/12/2010 1645	31319
2	3005A	6010C	1	04/14/2010 1349	KJC	04/12/2010 1845	31332

Parameter	CAS Number	Analytical Method	Result	Q	PQL	MDL	Units	Run
Arsenic	7440-38-2	6010C	0.0047	BJ	0.010	0.0040	mg/L	1
Barium	7440-39-3	6010C	0.035		0.025	0.0075	mg/L	1
Cadmium	7440-43-9	6010C	ND		0.0020	0.00060	mg/L	1
Chromium	7440-47-3	6010C	ND		0.0050	0.0021	mg/L	1
Lead	7439-92-1	6010C	0.0019	J	0.010	0.0019	mg/L	1
Mercury	7439-97-6	7470A	ND		0.00010	0.000053	mg/L	1
Selenium	7782-49-2	6010C	ND		0.010	0.0026	mg/L	1
Silver	7440-22-4	6010C	ND		0.0050	0.00040	mg/L	2

PQL = Practical quantitation limit
B = Detected in the method blank
E = Quantitation of compound exceeded the calibration range
ND = Not detected at or above the MDL
J = Estimated result < PQL and ≥ MDL
P = The RPD between two GC columns exceeds 40%
Where applicable, all soil sample analysis are reported on a dry weight basis unless flagged with a "W"
N = Recovery is out of criteria
H = Out of holding time

Volatile Organic Compounds by GC/MS

Client: ARCADIS U.S., Inc.
Laboratory ID: LD09009-005
Description: Trip Blank (040810)
Matrix: Aqueous
Date Sampled: 04/08/2010
Date Received: 04/09/2010

Run	Prep Method	Analytical Method	Dilution	Analysis Date	Analyst	Prep Date	Batch
1	5030B	8260B	1	04/14/2010 0518	LBS		31466

Parameter	CAS Number	Analytical Method	Result	Q	PQL	MDL	Units	Run
Acetone	67-64-1	8260B	2.2	J	10	0.061	ug/L	1
Benzene	71-43-2	8260B	ND		0.50	0.027	ug/L	1
Bromodichloromethane	75-27-4	8260B	ND		0.50	0.17	ug/L	1
Bromoform	75-25-2	8260B	ND		0.50	0.010	ug/L	1
Bromomethane (Methyl bromide)	74-83-9	8260B	ND		0.50	0.20	ug/L	1
2-Butanone (MEK)	78-93-3	8260B	ND		10	2.0	ug/L	1
Carbon disulfide	75-15-0	8260B	ND		0.50	0.097	ug/L	1
Carbon tetrachloride	56-23-5	8260B	ND		0.50	0.085	ug/L	1
Chlorobenzene	108-90-7	8260B	ND		0.50	0.17	ug/L	1
Chloroethane	75-00-3	8260B	ND		0.50	0.17	ug/L	1
Chloroform	67-66-3	8260B	ND		0.50	0.17	ug/L	1
Chloromethane (Methyl chloride)	74-87-3	8260B	ND		0.50	0.17	ug/L	1
Cyclohexane	110-82-7	8260B	ND		0.50	0.30	ug/L	1
1,2-Dibromo-3-chloropropane (DBCP)	96-12-8	8260B	ND		0.50	0.069	ug/L	1
Dibromochloromethane	124-48-1	8260B	ND		0.50	0.17	ug/L	1
1,2-Dibromoethane (EDB)	106-93-4	8260B	ND		0.50	0.061	ug/L	1
1,3-Dichlorobenzene	541-73-1	8260B	ND		0.50	0.17	ug/L	1
1,2-Dichlorobenzene	95-50-1	8260B	ND		0.50	0.17	ug/L	1
1,4-Dichlorobenzene	106-46-7	8260B	ND		0.50	0.17	ug/L	1
Dichlorodifluoromethane	75-71-8	8260B	ND		0.50	0.071	ug/L	1
1,1-Dichloroethane	75-34-3	8260B	ND		0.50	0.054	ug/L	1
1,2-Dichloroethane	107-06-2	8260B	ND		0.50	0.023	ug/L	1
trans-1,2-Dichloroethene	156-60-5	8260B	ND		0.50	0.079	ug/L	1
1,1-Dichloroethene	75-35-4	8260B	ND		0.50	0.094	ug/L	1
cis-1,2-Dichloroethene	156-59-2	8260B	ND		0.50	0.087	ug/L	1
1,2-Dichloropropane	78-87-5	8260B	ND		0.50	0.081	ug/L	1
trans-1,3-Dichloropropene	10061-02-6	8260B	ND		0.50	0.18	ug/L	1
cis-1,3-Dichloropropene	10061-01-5	8260B	ND		0.50	0.090	ug/L	1
Ethylbenzene	100-41-4	8260B	ND		0.50	0.17	ug/L	1
2-Hexanone	591-78-6	8260B	ND		10	0.27	ug/L	1
Isopropylbenzene	98-82-8	8260B	ND		0.50	0.029	ug/L	1
Methyl acetate	79-20-9	8260B	ND		1.0	0.30	ug/L	1
Methyl tertiary butyl ether (MTBE)	1634-04-4	8260B	ND		0.50	0.019	ug/L	1
4-Methyl-2-pentanone	108-10-1	8260B	ND		10	0.31	ug/L	1
Methylcyclohexane	108-87-2	8260B	ND		5.0	0.95	ug/L	1
Methylene chloride	75-09-2	8260B	0.25	BJ	0.50	0.17	ug/L	1
Styrene	100-42-5	8260B	ND		0.50	0.015	ug/L	1
1,1,2,2-Tetrachloroethane	79-34-5	8260B	ND		0.50	0.013	ug/L	1
Tetrachloroethene	127-18-4	8260B	ND		0.50	0.014	ug/L	1
Toluene	108-88-3	8260B	ND		0.50	0.17	ug/L	1
1,1,2-Trichloro-1,2,2-Trifluoroethane	76-13-1	8260B	ND		0.50	0.30	ug/L	1
1,2,4-Trichlorobenzene	120-82-1	8260B	ND		0.50	0.17	ug/L	1
1,1,1-Trichloroethane	71-55-6	8260B	ND		0.50	0.029	ug/L	1
1,1,2-Trichloroethane	79-00-5	8260B	ND		0.50	0.031	ug/L	1

PQL = Practical quantitation limit
B = Detected in the method blank
E = Quantitation of compound exceeded the calibration range
ND = Not detected at or above the MDL
J = Estimated result < PQL and ≥ MDL
P = The RPD between two GC columns exceeds 40%
Where applicable, all soil sample analysis are reported on a dry weight basis unless flagged with a "W"
N = Recovery is out of criteria
H = Out of holding time

Volatile Organic Compounds by GC/MS

Client: ARCADIS U.S., Inc.
Laboratory ID: LD09009-005
Description: Trip Blank (040810)
Matrix: Aqueous
Date Sampled: 04/08/2010
Date Received: 04/09/2010

Run	Prep Method	Analytical Method	Dilution	Analysis Date	Analyst	Prep Date	Batch
1	5030B	8260B	1	04/14/2010 0518	LBS		31466

Parameter	CAS Number	Analytical Method	Result	Q	PQL	MDL	Units	Run
Trichloroethene	79-01-6	8260B	ND		0.50	0.024	ug/L	1
Trichlorofluoromethane	75-69-4	8260B	ND		0.50	0.051	ug/L	1
Vinyl chloride	75-01-4	8260B	ND		0.50	0.065	ug/L	1
Xylenes (total)	1330-20-7	8260B	ND		0.50	0.17	ug/L	1

Surrogate	Q	Run 1 % Recovery	Acceptance Limits
1,2-Dichloroethane-d4		107	70-130
Bromofluorobenzene		94	70-130
Toluene-d8		106	70-130

PQL = Practical quantitation limit
B = Detected in the method blank
E = Quantitation of compound exceeded the calibration range
ND = Not detected at or above the MDL
J = Estimated result < PQL and ≥ MDL
P = The RPD between two GC columns exceeds 40%
Where applicable, all soil sample analysis are reported on a dry weight basis unless flagged with a "W"
N = Recovery is out of criteria
H = Out of holding time

QC Summary

Volatile Organic Compounds by GC/MS - MB

Sample ID: LQ31466-001
Batch: 31466
Analytical Method: 8260B

Matrix: Aqueous
Prep Method: 5030B

Parameter	Result	Q	Dil	PQL	MDL	Units	Analysis Date
Acetone	ND		1	10	0.061	ug/L	04/14/2010 0309
Benzene	ND		1	0.50	0.027	ug/L	04/14/2010 0309
Bromodichloromethane	ND		1	0.50	0.17	ug/L	04/14/2010 0309
Bromoform	ND		1	0.50	0.010	ug/L	04/14/2010 0309
Bromomethane (Methyl bromide)	ND		1	0.50	0.20	ug/L	04/14/2010 0309
2-Butanone (MEK)	ND		1	10	2.0	ug/L	04/14/2010 0309
Carbon disulfide	ND		1	0.50	0.097	ug/L	04/14/2010 0309
Carbon tetrachloride	ND		1	0.50	0.085	ug/L	04/14/2010 0309
Chlorobenzene	ND		1	0.50	0.17	ug/L	04/14/2010 0309
Chloroethane	ND		1	0.50	0.17	ug/L	04/14/2010 0309
Chloroform	ND		1	0.50	0.17	ug/L	04/14/2010 0309
Chloromethane (Methyl chloride)	ND		1	0.50	0.17	ug/L	04/14/2010 0309
Cyclohexane	ND		1	0.50	0.30	ug/L	04/14/2010 0309
1,2-Dibromo-3-chloropropane (DBCP)	ND		1	0.50	0.069	ug/L	04/14/2010 0309
Dibromochloromethane	ND		1	0.50	0.17	ug/L	04/14/2010 0309
1,2-Dibromoethane (EDB)	ND		1	0.50	0.061	ug/L	04/14/2010 0309
1,4-Dichlorobenzene	ND		1	0.50	0.17	ug/L	04/14/2010 0309
1,2-Dichlorobenzene	ND		1	0.50	0.17	ug/L	04/14/2010 0309
1,3-Dichlorobenzene	ND		1	0.50	0.17	ug/L	04/14/2010 0309
Dichlorodifluoromethane	ND		1	0.50	0.071	ug/L	04/14/2010 0309
1,2-Dichloroethane	ND		1	0.50	0.023	ug/L	04/14/2010 0309
1,1-Dichloroethane	ND		1	0.50	0.054	ug/L	04/14/2010 0309
cis-1,2-Dichloroethene	ND		1	0.50	0.087	ug/L	04/14/2010 0309
1,1-Dichloroethene	ND		1	0.50	0.094	ug/L	04/14/2010 0309
trans-1,2-Dichloroethene	ND		1	0.50	0.079	ug/L	04/14/2010 0309
1,2-Dichloropropane	ND		1	0.50	0.081	ug/L	04/14/2010 0309
cis-1,3-Dichloropropene	ND		1	0.50	0.090	ug/L	04/14/2010 0309
trans-1,3-Dichloropropene	ND		1	0.50	0.18	ug/L	04/14/2010 0309
Ethylbenzene	ND		1	0.50	0.17	ug/L	04/14/2010 0309
2-Hexanone	ND		1	10	0.27	ug/L	04/14/2010 0309
Isopropylbenzene	ND		1	0.50	0.029	ug/L	04/14/2010 0309
Methyl acetate	ND		1	1.0	0.30	ug/L	04/14/2010 0309
Methyl tertiary butyl ether (MTBE)	ND		1	0.50	0.019	ug/L	04/14/2010 0309
4-Methyl-2-pentanone	ND		1	10	0.31	ug/L	04/14/2010 0309
Methylcyclohexane	ND		1	5.0	0.95	ug/L	04/14/2010 0309
Methylene chloride	0.24	J	1	0.50	0.17	ug/L	04/14/2010 0309
Styrene	ND		1	0.50	0.015	ug/L	04/14/2010 0309
1,1,2,2-Tetrachloroethane	ND		1	0.50	0.013	ug/L	04/14/2010 0309
Tetrachloroethene	ND		1	0.50	0.014	ug/L	04/14/2010 0309
Toluene	ND		1	0.50	0.17	ug/L	04/14/2010 0309
1,1,2-Trichloro-1,2,2-Trifluoroethane	ND		1	0.50	0.30	ug/L	04/14/2010 0309
1,2,4-Trichlorobenzene	ND		1	0.50	0.17	ug/L	04/14/2010 0309
1,1,2-Trichloroethane	ND		1	0.50	0.031	ug/L	04/14/2010 0309
1,1,1-Trichloroethane	ND		1	0.50	0.029	ug/L	04/14/2010 0309

PQL = Practical quantitation limit
ND = Not detected at or above the MDL
P = The RPD between two GC columns exceeds 40%
J = Estimated result < PQL and ≥ MDL
N - Recovery is out of criteria
+ - RPD is out of criteria

Where applicable, all soil sample analysis are reported on a dry weight basis unless flagged with a "W"

Note: Calculations are performed before rounding to avoid round-off errors in calculated results

Volatile Organic Compounds by GC/MS - MB

Sample ID: LQ31466-001
Batch: 31466
Analytical Method: 8260B

Matrix: Aqueous
Prep Method: 5030B

Parameter	Result	Q	Dil	PQL	MDL	Units	Analysis Date
Trichloroethene	ND		1	0.50	0.024	ug/L	04/14/2010 0309
Trichlorofluoromethane	ND		1	0.50	0.051	ug/L	04/14/2010 0309
Vinyl chloride	ND		1	0.50	0.065	ug/L	04/14/2010 0309
Xylenes (total)	ND		1	0.50	0.17	ug/L	04/14/2010 0309

Surrogate	Q	% Rec	Acceptance Limit
Bromofluorobenzene		92	70-130
1,2-Dichloroethane-d4		103	70-130
Toluene-d8		106	70-130

PQL = Practical quantitation limit
ND = Not detected at or above the MDL
P = The RPD between two GC columns exceeds 40%
J = Estimated result < PQL and ≥ MDL
N - Recovery is out of criteria
+ - RPD is out of criteria

Where applicable, all soil sample analysis are reported on a dry weight basis unless flagged with a "W"

Note: Calculations are performed before rounding to avoid round-off errors in calculated results

Volatile Organic Compounds by GC/MS - LCS

Sample ID: LQ31466-002
Batch: 31466
Analytical Method: 8260B

Matrix: Aqueous
Prep Method: 5030B

Parameter	Spike Amount (ug/L)	Result (ug/L)	Q	Dil	% Rec	% Rec Limit	Analysis Date
Acetone	100	97		1	97	46-153	04/14/2010 0140
Benzene	50	53		1	106	70-130	04/14/2010 0140
Bromodichloromethane	50	50		1	99	70-130	04/14/2010 0140
Bromoform	50	45		1	90	70-130	04/14/2010 0140
Bromomethane (Methyl bromide)	50	50		1	99	60-140	04/14/2010 0140
2-Butanone (MEK)	100	94		1	94	60-140	04/14/2010 0140
Carbon disulfide	50	61		1	121	60-140	04/14/2010 0140
Carbon tetrachloride	50	56		1	111	70-130	04/14/2010 0140
Chlorobenzene	50	51		1	102	70-130	04/14/2010 0140
Chloroethane	50	49		1	99	42-163	04/14/2010 0140
Chloroform	50	54		1	107	70-130	04/14/2010 0140
Chloromethane (Methyl chloride)	50	41		1	82	20-158	04/14/2010 0140
Cyclohexane	50	54		1	109	70-130	04/14/2010 0140
1,2-Dibromo-3-chloropropane (DBCP)	50	45		1	91	70-130	04/14/2010 0140
Dibromochloromethane	50	47		1	93	70-130	04/14/2010 0140
1,2-Dibromoethane (EDB)	50	49		1	97	70-130	04/14/2010 0140
1,4-Dichlorobenzene	50	52		1	103	70-130	04/14/2010 0140
1,2-Dichlorobenzene	50	52		1	104	70-130	04/14/2010 0140
1,3-Dichlorobenzene	50	52		1	104	70-130	04/14/2010 0140
Dichlorodifluoromethane	50	53		1	106	60-140	04/14/2010 0140
1,2-Dichloroethane	50	52		1	105	70-130	04/14/2010 0140
1,1-Dichloroethane	50	53		1	107	70-130	04/14/2010 0140
cis-1,2-Dichloroethene	50	53		1	106	70-130	04/14/2010 0140
1,1-Dichloroethene	50	53		1	106	70-130	04/14/2010 0140
trans-1,2-Dichloroethene	50	53		1	107	70-130	04/14/2010 0140
1,2-Dichloropropane	50	54		1	107	70-130	04/14/2010 0140
cis-1,3-Dichloropropene	50	49		1	98	70-130	04/14/2010 0140
trans-1,3-Dichloropropene	50	46		1	93	70-130	04/14/2010 0140
Ethylbenzene	50	52		1	105	70-130	04/14/2010 0140
2-Hexanone	100	94		1	94	60-140	04/14/2010 0140
Isopropylbenzene	50	58		1	117	70-130	04/14/2010 0140
Methyl acetate	50	52		1	103	15-128	04/14/2010 0140
Methyl tertiary butyl ether (MTBE)	50	55		1	109	70-130	04/14/2010 0140
4-Methyl-2-pentanone	100	97		1	97	60-140	04/14/2010 0140
Methylcyclohexane	50	54		1	109	70-130	04/14/2010 0140
Methylene chloride	50	50		1	99	70-130	04/14/2010 0140
Styrene	50	47		1	93	70-130	04/14/2010 0140
1,1,2,2-Tetrachloroethane	50	57		1	114	70-130	04/14/2010 0140
Tetrachloroethene	50	49		1	98	70-130	04/14/2010 0140
Toluene	50	54		1	108	70-130	04/14/2010 0140
1,1,2-Trichloro-1,2,2-Trifluoroethane	50	47		1	93	70-130	04/14/2010 0140
1,2,4-Trichlorobenzene	50	54		1	107	70-130	04/14/2010 0140
1,1,2-Trichloroethane	50	50		1	100	70-130	04/14/2010 0140
1,1,1-Trichloroethane	50	56		1	112	70-130	04/14/2010 0140

PQL = Practical quantitation limit
ND = Not detected at or above the MDL
P = The RPD between two GC columns exceeds 40%
J = Estimated result < PQL and ≥ MDL
N - Recovery is out of criteria
+ - RPD is out of criteria

Where applicable, all soil sample analysis are reported on a dry weight basis unless flagged with a "W"

Note: Calculations are performed before rounding to avoid round-off errors in calculated results

Volatile Organic Compounds by GC/MS - LCS

Sample ID: LQ31466-002
Batch: 31466
Analytical Method: 8260B

Matrix: Aqueous
Prep Method: 5030B

Parameter	Spike Amount (ug/L)	Result (ug/L)	Q	Dil	% Rec	% Rec Limit	Analysis Date
Trichloroethene	50	51		1	102	70-130	04/14/2010 0140
Trichlorofluoromethane	50	51		1	102	60-140	04/14/2010 0140
Vinyl chloride	50	49		1	97	60-140	04/14/2010 0140
Xylenes (total)	100	100		1	101	70-130	04/14/2010 0140

Surrogate	Q	% Rec	Acceptance Limit
Bromofluorobenzene		98	70-130
1,2-Dichloroethane-d4		100	70-130
Toluene-d8		107	70-130

PQL = Practical quantitation limit
ND = Not detected at or above the MDL
P = The RPD between two GC columns exceeds 40%
J = Estimated result < PQL and ≥ MDL
N - Recovery is out of criteria
+ - RPD is out of criteria

Where applicable, all soil sample analysis are reported on a dry weight basis unless flagged with a "W"

Note: Calculations are performed before rounding to avoid round-off errors in calculated results

Volatile Organic Compounds by GC/MS - LCSD

Sample ID: LQ31466-003
Batch: 31466
Analytical Method: 8260B

Matrix: Aqueous
Prep Method: 5030B

Parameter	Spike Amount (ug/L)	Result (ug/L)	Q	Dil	% Rec	% RPD	% Rec Limit	% RPD Limit	Analysis Date
Acetone	100	93		1	93	4.0	46-153	20	04/14/2010 0202
Benzene	50	54		1	107	1.3	70-130	20	04/14/2010 0202
Bromodichloromethane	50	50		1	99	0.15	70-130	20	04/14/2010 0202
Bromoform	50	46		1	91	1.3	70-130	20	04/14/2010 0202
Bromomethane (Methyl bromide)	50	51		1	101	1.8	60-140	20	04/14/2010 0202
2-Butanone (MEK)	100	92		1	92	2.0	60-140	20	04/14/2010 0202
Carbon disulfide	50	61		1	123	1.3	60-140	20	04/14/2010 0202
Carbon tetrachloride	50	57		1	113	2.2	70-130	20	04/14/2010 0202
Chlorobenzene	50	52		1	104	2.6	70-130	20	04/14/2010 0202
Chloroethane	50	52		1	103	4.5	42-163	20	04/14/2010 0202
Chloroform	50	53		1	105	1.5	70-130	20	04/14/2010 0202
Chloromethane (Methyl chloride)	50	42		1	84	1.7	20-158	20	04/14/2010 0202
Cyclohexane	50	55		1	111	1.8	70-130	20	04/14/2010 0202
1,2-Dibromo-3-chloropropane (DBCP)	50	45		1	91	0.099	70-130	20	04/14/2010 0202
Dibromochloromethane	50	48		1	96	2.5	70-130	20	04/14/2010 0202
1,2-Dibromoethane (EDB)	50	50		1	99	2.2	70-130	20	04/14/2010 0202
1,4-Dichlorobenzene	50	52		1	104	1.3	70-130	20	04/14/2010 0202
1,2-Dichlorobenzene	50	52		1	105	0.54	70-130	20	04/14/2010 0202
1,3-Dichlorobenzene	50	53		1	106	1.7	70-130	20	04/14/2010 0202
Dichlorodifluoromethane	50	55		1	109	3.2	60-140	20	04/14/2010 0202
1,2-Dichloroethane	50	51		1	102	2.4	70-130	20	04/14/2010 0202
1,1-Dichloroethane	50	53		1	106	0.79	70-130	20	04/14/2010 0202
cis-1,2-Dichloroethene	50	52		1	104	1.7	70-130	20	04/14/2010 0202
1,1-Dichloroethene	50	55		1	110	3.1	70-130	20	04/14/2010 0202
trans-1,2-Dichloroethene	50	53		1	106	0.53	70-130	20	04/14/2010 0202
1,2-Dichloropropane	50	55		1	110	2.1	70-130	20	04/14/2010 0202
cis-1,3-Dichloropropene	50	50		1	101	2.6	70-130	20	04/14/2010 0202
trans-1,3-Dichloropropene	50	48		1	95	2.7	70-130	20	04/14/2010 0202
Ethylbenzene	50	54		1	109	3.7	70-130	20	04/14/2010 0202
2-Hexanone	100	97		1	97	3.4	60-140	20	04/14/2010 0202
Isopropylbenzene	50	59		1	119	1.4	70-130	20	04/14/2010 0202
Methyl acetate	50	51		1	102	1.1	15-128	20	04/14/2010 0202
Methyl tertiary butyl ether (MTBE)	50	53		1	107	2.4	70-130	20	04/14/2010 0202
4-Methyl-2-pentanone	100	97		1	97	0.24	60-140	20	04/14/2010 0202
Methylcyclohexane	50	57		1	115	5.3	70-130	20	04/14/2010 0202
Methylene chloride	50	49		1	97	1.8	70-130	20	04/14/2010 0202
Styrene	50	49		1	97	4.6	70-130	20	04/14/2010 0202
1,1,2,2-Tetrachloroethane	50	57		1	113	0.64	70-130	20	04/14/2010 0202
Tetrachloroethene	50	51		1	103	4.6	70-130	20	04/14/2010 0202
Toluene	50	56		1	112	2.9	70-130	20	04/14/2010 0202
1,1,2-Trichloro-1,2,2-Trifluoroethane	50	47		1	95	1.4	70-130	20	04/14/2010 0202
1,2,4-Trichlorobenzene	50	53		1	107	0.20	70-130	20	04/14/2010 0202
1,1,2-Trichloroethane	50	51		1	102	1.3	70-130	20	04/14/2010 0202
1,1,1-Trichloroethane	50	56		1	113	0.90	70-130	20	04/14/2010 0202

PQL = Practical quantitation limit
ND = Not detected at or above the MDL
P = The RPD between two GC columns exceeds 40%
J = Estimated result < PQL and ≥ MDL
N - Recovery is out of criteria
+ - RPD is out of criteria

Where applicable, all soil sample analysis are reported on a dry weight basis unless flagged with a "W"

Note: Calculations are performed before rounding to avoid round-off errors in calculated results

Volatile Organic Compounds by GC/MS - LCSD

Sample ID: LQ31466-003
Batch: 31466
Analytical Method: 8260B

Matrix: Aqueous
Prep Method: 5030B

Parameter	Spike Amount (ug/L)	Result (ug/L)	Q	Dil	% Rec	% RPD	% Rec Limit	% RPD Limit	Analysis Date
Trichloroethene	50	53		1	106	3.3	70-130	20	04/14/2010 0202
Trichlorofluoromethane	50	52		1	104	1.8	60-140	20	04/14/2010 0202
Vinyl chloride	50	49		1	99	1.8	60-140	20	04/14/2010 0202
Xylenes (total)	100	100		1	104	3.0	70-130	20	04/14/2010 0202

Surrogate	Q	% Rec	Acceptance Limit
Bromofluorobenzene		98	70-130
1,2-Dichloroethane-d4		98	70-130
Toluene-d8		107	70-130

PQL = Practical quantitation limit
ND = Not detected at or above the MDL
P = The RPD between two GC columns exceeds 40%
J = Estimated result < PQL and ≥ MDL
N - Recovery is out of criteria
+ - RPD is out of criteria

Where applicable, all soil sample analysis are reported on a dry weight basis unless flagged with a "W"

Note: Calculations are performed before rounding to avoid round-off errors in calculated results

Semivolatile Organic Compounds by GC/MS - MB

Sample ID: LQ31258-001
Batch: 31258
Analytical Method: 8270D

Matrix: Aqueous
Prep Method: 3520C
Prep Date: 04/11/2010 1745

Parameter	Result	Q	Dil	PQL	MDL	Units	Analysis Date
1,1'-Biphenyl	ND		1	1.0	0.20	ug/L	04/13/2010 2141
2,4,5-Trichlorophenol	ND		1	1.0	0.18	ug/L	04/13/2010 2141
2,4,6-Trichlorophenol	ND		1	1.0	0.22	ug/L	04/13/2010 2141
2,4-Dichlorophenol	ND		1	1.0	0.15	ug/L	04/13/2010 2141
2,4-Dimethylphenol	ND		1	1.0	0.31	ug/L	04/13/2010 2141
2,4-Dinitrophenol	ND		1	5.0	0.25	ug/L	04/13/2010 2141
2,4-Dinitrotoluene	ND		1	2.0	0.45	ug/L	04/13/2010 2141
2,6-Dinitrotoluene	ND		1	2.0	0.40	ug/L	04/13/2010 2141
2-Chloronaphthalene	ND		1	1.0	0.12	ug/L	04/13/2010 2141
2-Chlorophenol	ND		1	1.0	0.13	ug/L	04/13/2010 2141
2-Methylnaphthalene	ND		1	1.0	0.080	ug/L	04/13/2010 2141
2-Methylphenol	ND		1	1.0	0.17	ug/L	04/13/2010 2141
2-Nitroaniline	ND		1	2.0	0.55	ug/L	04/13/2010 2141
2-Nitrophenol	ND		1	2.0	0.27	ug/L	04/13/2010 2141
3 & 4-Methylphenol	ND		1	2.0	0.57	ug/L	04/13/2010 2141
3,3'-Dichlorobenzidine	ND		1	5.0	0.81	ug/L	04/13/2010 2141
3-Nitroaniline	ND		1	2.0	0.77	ug/L	04/13/2010 2141
4,6-Dinitro-2-methylphenol	ND		1	5.0	1.5	ug/L	04/13/2010 2141
4-Bromophenyl phenyl ether	ND		1	1.0	0.12	ug/L	04/13/2010 2141
4-Chloro-3-methyl phenol	ND		1	1.0	0.22	ug/L	04/13/2010 2141
4-Chloroaniline	ND		1	1.0	0.13	ug/L	04/13/2010 2141
4-Chlorophenyl phenyl ether	ND		1	1.0	0.11	ug/L	04/13/2010 2141
4-Nitroaniline	ND		1	2.0	0.39	ug/L	04/13/2010 2141
4-Nitrophenol	ND		1	5.0	0.64	ug/L	04/13/2010 2141
Acenaphthene	ND		1	1.0	0.090	ug/L	04/13/2010 2141
Acenaphthylene	ND		1	1.0	0.16	ug/L	04/13/2010 2141
Acetophenone	ND		1	1.0	0.32	ug/L	04/13/2010 2141
Anthracene	ND		1	1.0	0.13	ug/L	04/13/2010 2141
Atrazine	ND		1	1.0	0.20	ug/L	04/13/2010 2141
Benzaldehyde	ND		1	5.0	1.0	ug/L	04/13/2010 2141
Benzo(a)anthracene	ND		1	1.0	0.15	ug/L	04/13/2010 2141
Benzo(a)pyrene	ND		1	1.0	0.16	ug/L	04/13/2010 2141
Benzo(b)fluoranthene	ND		1	1.0	0.20	ug/L	04/13/2010 2141
Benzo(g,h,i)perylene	ND		1	1.0	0.23	ug/L	04/13/2010 2141
Benzo(k)fluoranthene	ND		1	1.0	0.12	ug/L	04/13/2010 2141
bis(2-Chloroethoxy)methane	ND		1	1.0	0.13	ug/L	04/13/2010 2141
bis(2-Chloroethyl)ether	ND		1	1.0	0.13	ug/L	04/13/2010 2141
bis(2-Chloroisopropyl)ether	ND		1	1.0	0.080	ug/L	04/13/2010 2141
bis(2-Ethylhexyl)phthalate	ND		1	5.0	1.7	ug/L	04/13/2010 2141
Butyl benzyl phthalate	ND		1	5.0	1.7	ug/L	04/13/2010 2141
Caprolactam	ND		1	5.0	1.2	ug/L	04/13/2010 2141
Carbazole	ND		1	1.0	0.25	ug/L	04/13/2010 2141
Chrysene	ND		1	1.0	0.12	ug/L	04/13/2010 2141
Di-n-butyl phthalate	ND		1	5.0	1.7	ug/L	04/13/2010 2141

PQL = Practical quantitation limit
ND = Not detected at or above the MDL
P = The RPD between two GC columns exceeds 40%
J = Estimated result < PQL and ≥ MDL
N - Recovery is out of criteria
+ - RPD is out of criteria

Where applicable, all soil sample analysis are reported on a dry weight basis unless flagged with a "W"

Note: Calculations are performed before rounding to avoid round-off errors in calculated results

Semivolatile Organic Compounds by GC/MS - MB

Sample ID: LQ31258-001
Batch: 31258
Analytical Method: 8270D

Matrix: Aqueous
Prep Method: 3520C
Prep Date: 04/11/2010 1745

Parameter	Result	Q	Dil	PQL	MDL	Units	Analysis Date
Di-n-octylphthalate	ND		1	5.0	1.7	ug/L	04/13/2010 2141
Dibenzo(a,h)anthracene	ND		1	1.0	0.13	ug/L	04/13/2010 2141
Dibenzofuran	ND		1	1.0	0.16	ug/L	04/13/2010 2141
Diethylphthalate	ND		1	5.0	1.7	ug/L	04/13/2010 2141
Dimethyl phthalate	ND		1	5.0	1.7	ug/L	04/13/2010 2141
Fluoranthene	ND		1	1.0	0.21	ug/L	04/13/2010 2141
Fluorene	ND		1	1.0	0.10	ug/L	04/13/2010 2141
Hexachlorobenzene	ND		1	1.0	0.21	ug/L	04/13/2010 2141
Hexachlorobutadiene	ND		1	1.0	0.090	ug/L	04/13/2010 2141
Hexachlorocyclopentadiene	ND		1	5.0	0.23	ug/L	04/13/2010 2141
Hexachloroethane	ND		1	1.0	0.11	ug/L	04/13/2010 2141
Indeno(1,2,3-c,d)pyrene	ND		1	1.0	0.23	ug/L	04/13/2010 2141
Isophorone	ND		1	1.0	0.080	ug/L	04/13/2010 2141
N-Nitrosodi-n-propylamine	ND		1	1.0	0.080	ug/L	04/13/2010 2141
N-Nitrosodiphenylamine (Diphenylamine)	ND		1	1.0	0.38	ug/L	04/13/2010 2141
Naphthalene	ND		1	1.0	0.070	ug/L	04/13/2010 2141
Nitrobenzene	ND		1	1.0	0.10	ug/L	04/13/2010 2141
Pentachlorophenol	ND		1	5.0	0.54	ug/L	04/13/2010 2141
Phenanthrene	ND		1	1.0	0.18	ug/L	04/13/2010 2141
Phenol	ND		1	1.0	0.11	ug/L	04/13/2010 2141
Pyrene	ND		1	1.0	0.16	ug/L	04/13/2010 2141

Surrogate	Q	% Rec	Acceptance Limit
2,4,6-Tribromophenol		62	41-144
2-Fluorobiphenyl		65	37-129
2-Fluorophenol		63	24-127
Nitrobenzene-d5		67	38-127
Phenol-d5		62	28-128
Terphenyl-d14		52	10-148

PQL = Practical quantitation limit
ND = Not detected at or above the MDL
P = The RPD between two GC columns exceeds 40%
J = Estimated result < PQL and ≥ MDL
N - Recovery is out of criteria
+ - RPD is out of criteria

Where applicable, all soil sample analysis are reported on a dry weight basis unless flagged with a "W"

Note: Calculations are performed before rounding to avoid round-off errors in calculated results

Semivolatile Organic Compounds by GC/MS - LCS

Sample ID: LQ31258-002
Batch: 31258
Analytical Method: 8270D

Matrix: Aqueous
Prep Method: 3520C
Prep Date: 04/11/2010 1745

Parameter	Spike Amount (ug/L)	Result (ug/L)	Q	Dil	% Rec	% Rec Limit	Analysis Date
2,4,5-Trichlorophenol	20	13		1	66	46-125	04/13/2010 2200
2,4,6-Trichlorophenol	20	13		1	65	36-123	04/13/2010 2200
2,4-Dichlorophenol	20	13		1	66	38-127	04/13/2010 2200
2,4-Dimethylphenol	20	13		1	63	36-110	04/13/2010 2200
2,4-Dinitrophenol	100	81		1	81	33-143	04/13/2010 2200
2,4-Dinitrotoluene	40	35		1	87	55-137	04/13/2010 2200
2,6-Dinitrotoluene	40	26		1	64	53-128	04/13/2010 2200
2-Chloronaphthalene	20	13		1	67	42-132	04/13/2010 2200
2-Chlorophenol	20	13		1	63	40-128	04/13/2010 2200
2-Methylnaphthalene	20	13		1	63	49-122	04/13/2010 2200
2-Methylphenol	20	15		1	76	33-122	04/13/2010 2200
2-Nitroaniline	40	26		1	65	48-126	04/13/2010 2200
2-Nitrophenol	40	29		1	72	44-131	04/13/2010 2200
3 & 4-Methylphenol	40	25		1	62	48-112	04/13/2010 2200
3-Nitroaniline	40	19		1	47	29-109	04/13/2010 2200
4,6-Dinitro-2-methylphenol	100	78		1	78	46-151	04/13/2010 2200
4-Bromophenyl phenyl ether	20	13		1	64	49-123	04/13/2010 2200
4-Chloro-3-methyl phenol	20	13		1	63	48-136	04/13/2010 2200
4-Chloroaniline	20	5.0		1	25	18-73	04/13/2010 2200
4-Chlorophenyl phenyl ether	20	12		1	61	34-124	04/13/2010 2200
4-Nitroaniline	40	24		1	59	42-154	04/13/2010 2200
4-Nitrophenol	100	71		1	71	43-145	04/13/2010 2200
Acenaphthene	20	12		1	61	51-130	04/13/2010 2200
Acenaphthylene	20	15		1	77	46-131	04/13/2010 2200
Anthracene	20	12		1	60	48-122	04/13/2010 2200
Benzo(a)anthracene	20	14		1	68	50-143	04/13/2010 2200
Benzo(a)pyrene	20	14		1	69	55-141	04/13/2010 2200
Benzo(b)fluoranthene	20	14		1	70	48-147	04/13/2010 2200
Benzo(g,h,i)perylene	20	13		1	64	48-139	04/13/2010 2200
Benzo(k)fluoranthene	20	11		1	53	48-148	04/13/2010 2200
bis(2-Chloroethoxy)methane	20	12		1	62	46-130	04/13/2010 2200
bis(2-Chloroethyl)ether	20	13		1	63	42-127	04/13/2010 2200
bis(2-Chloroisopropyl)ether	20	12		1	59	36-133	04/13/2010 2200
bis(2-Ethylhexyl)phthalate	20	12		1	60	40-141	04/13/2010 2200
Butyl benzyl phthalate	20	13		1	64	52-142	04/13/2010 2200
Carbazole	20	13		1	66	45-101	04/13/2010 2200
Chrysene	20	11		1	57	51-137	04/13/2010 2200
Di-n-butyl phthalate	20	13		1	64	50-134	04/13/2010 2200
Di-n-octylphthalate	20	12		1	59	50-136	04/13/2010 2200
Dibenzo(a,h)anthracene	20	13		1	64	48-139	04/13/2010 2200
Dibenzofuran	20	12		1	61	45-142	04/13/2010 2200
Diethylphthalate	20	12		1	62	48-124	04/13/2010 2200
Dimethyl phthalate	20	12		1	62	43-122	04/13/2010 2200
Fluoranthene	20	12		1	61	50-124	04/13/2010 2200

PQL = Practical quantitation limit
ND = Not detected at or above the MDL
P = The RPD between two GC columns exceeds 40%
J = Estimated result < PQL and ≥ MDL
N - Recovery is out of criteria
+ - RPD is out of criteria

Where applicable, all soil sample analysis are reported on a dry weight basis unless flagged with a "W"

Note: Calculations are performed before rounding to avoid round-off errors in calculated results

Semivolatile Organic Compounds by GC/MS - LCS

Sample ID: LQ31258-002
Batch: 31258
Analytical Method: 8270D

Matrix: Aqueous
Prep Method: 3520C
Prep Date: 04/11/2010 1745

Parameter	Spike Amount (ug/L)	Result (ug/L)	Q	Dil	% Rec	% Rec Limit	Analysis Date
Fluorene	20	12		1	61	39-122	04/13/2010 2200
Hexachlorobenzene	20	12		1	62	46-125	04/13/2010 2200
Hexachlorobutadiene	20	13		1	65	38-121	04/13/2010 2200
Hexachlorocyclopentadiene	100	55		1	55	24-110	04/13/2010 2200
Hexachloroethane	20	13		1	64	32-109	04/13/2010 2200
Indeno(1,2,3-c,d)pyrene	20	13		1	64	49-146	04/13/2010 2200
Isophorone	20	13		1	64	43-118	04/13/2010 2200
N-Nitrosodi-n-propylamine	20	12		1	62	46-135	04/13/2010 2200
N-Nitrosodiphenylamine (Diphenylamine)	20	13		1	65	44-124	04/13/2010 2200
Naphthalene	20	12		1	61	45-118	04/13/2010 2200
Nitrobenzene	20	14		1	70	46-131	04/13/2010 2200
Pentachlorophenol	100	60		1	60	30-137	04/13/2010 2200
Phenanthrene	20	12		1	60	49-122	04/13/2010 2200
Phenol	20	13		1	63	35-118	04/13/2010 2200
Pyrene	20	12		1	62	50-130	04/13/2010 2200

Surrogate	Q	% Rec	Acceptance Limit
2,4,6-Tribromophenol		65	41-144
2-Fluorobiphenyl		62	37-129
2-Fluorophenol		64	24-127
Nitrobenzene-d5		68	38-127
Phenol-d5		63	28-128
Terphenyl-d14		52	10-148

PQL = Practical quantitation limit
ND = Not detected at or above the MDL
P = The RPD between two GC columns exceeds 40%
J = Estimated result < PQL and ≥ MDL
N - Recovery is out of criteria
+ - RPD is out of criteria

Where applicable, all soil sample analysis are reported on a dry weight basis unless flagged with a "W"

Note: Calculations are performed before rounding to avoid round-off errors in calculated results

Semivolatile Organic Compounds by GC/MS - MS

Sample ID: LD09009-001MS
Batch: 31258
Analytical Method: 8270D

Matrix: Aqueous
Prep Method: 3520C
Prep Date: 04/11/2010 1745

Parameter	Sample Amount (ug/L)	Spike Amount (ug/L)	Result (ug/L)	Q	Dil	% Rec	% Rec Limit	Analysis Date
Acenaphthene	ND	41	18		1	45	10-133	04/13/2010 2238
Acenaphthylene	ND	41	22		1	55	34-128	04/13/2010 2238
Anthracene	ND	41	24		1	58	48-122	04/13/2010 2238
Benzo(a)anthracene	ND	41	22		1	55	53-98	04/13/2010 2238
Benzo(a)pyrene	ND	41	21		1	51	11-160	04/13/2010 2238
Benzo(b)fluoranthene	ND	41	20		1	48	10-165	04/13/2010 2238
Benzo(g,h,i)perylene	ND	41	18		1	44	42-111	04/13/2010 2238
Benzo(k)fluoranthene	ND	41	18		1	44	13-175	04/13/2010 2238
4-Bromophenyl phenyl ether	ND	41	23		1	56	49-123	04/13/2010 2238
Butyl benzyl phthalate	ND	41	24		1	60	52-142	04/13/2010 2238
Carbazole	ND	41	28		1	67	45-101	04/13/2010 2238
4-Chloro-3-methyl phenol	ND	41	20		1	50	40-98	04/13/2010 2238
4-Chloroaniline	ND	41	6.8		1	17	10-98	04/13/2010 2238
bis(2-Chloroethoxy)methane	ND	41	16	N	1	39	43-93	04/13/2010 2238
bis(2-Chloroethyl)ether	ND	41	17		1	42	41-88	04/13/2010 2238
bis(2-Chloroisopropyl)ether	ND	41	16		1	38	36-99	04/13/2010 2238
2-Chloronaphthalene	ND	41	17		1	43	40-89	04/13/2010 2238
2-Chlorophenol	ND	41	17		1	43	33-92	04/13/2010 2238
4-Chlorophenyl phenyl ether	ND	41	20		1	50	34-124	04/13/2010 2238
Chrysene	ND	41	21		1	51	51-107	04/13/2010 2238
Dibenzo(a,h)anthracene	ND	41	18	N	1	43	47-116	04/13/2010 2238
Dibenzofuran	ND	41	20		1	48	45-94	04/13/2010 2238
2,4-Dichlorophenol	ND	41	17		1	41	34-105	04/13/2010 2238
Diethylphthalate	ND	41	25		1	61	48-124	04/13/2010 2238
Dimethyl phthalate	ND	41	24		1	58	43-122	04/13/2010 2238
2,4-Dimethylphenol	ND	41	17		1	41	33-77	04/13/2010 2238
Di-n-butyl phthalate	ND	41	25		1	61	50-134	04/13/2010 2238
4,6-Dinitro-2-methylphenol	ND	200	170		1	83	33-118	04/13/2010 2238
2,4-Dinitrophenol	ND	200	170		1	85	19-119	04/13/2010 2238
2,4-Dinitrotoluene	ND	82	73		1	89	50-104	04/13/2010 2238
2,6-Dinitrotoluene	ND	82	51		1	63	53-128	04/13/2010 2238
Di-n-octylphthalate	ND	41	16		1	40	40-112	04/13/2010 2238
bis(2-Ethylhexyl)phthalate	ND	41	16		1	40	10-142	04/13/2010 2238
Fluoranthene	ND	41	24		1	60	50-124	04/13/2010 2238
Fluorene	ND	41	21		1	52	39-122	04/13/2010 2238
Hexachlorobenzene	ND	41	22		1	54	46-125	04/13/2010 2238
Hexachlorobutadiene	ND	41	18		1	43	42-94	04/13/2010 2238
Hexachlorocyclopentadiene	ND	200	75		1	37	14-89	04/13/2010 2238
Hexachloroethane	ND	41	18		1	44	39-86	04/13/2010 2238
Indeno(1,2,3-c,d)pyrene	ND	41	18		1	44	43-113	04/13/2010 2238
Isophorone	ND	41	17	N	1	41	42-84	04/13/2010 2238
2-Methylnaphthalene	ND	41	17	N	1	41	46-90	04/13/2010 2238
2-Methylphenol	ND	41	21		1	51	33-122	04/13/2010 2238
3 & 4-Methylphenol	ND	82	31		1	38	24-97	04/13/2010 2238

PQL = Practical quantitation limit
ND = Not detected at or above the MDL
P = The RPD between two GC columns exceeds 40%
J = Estimated result < PQL and ≥ MDL
N - Recovery is out of criteria
+ - RPD is out of criteria

Where applicable, all soil sample analysis are reported on a dry weight basis unless flagged with a "W"

Note: Calculations are performed before rounding to avoid round-off errors in calculated results

Semivolatile Organic Compounds by GC/MS - MS

Sample ID: LD09009-001MS
Batch: 31258
Analytical Method: 8270D

Matrix: Aqueous
Prep Method: 3520C
Prep Date: 04/11/2010 1745

Parameter	Sample Amount (ug/L)	Spike Amount (ug/L)	Result (ug/L)	Q	Dil	% Rec	% Rec Limit	Analysis Date
Naphthalene	ND	41	17	N	1	41	46-89	04/13/2010 2238
2-Nitroaniline	ND	82	49		1	60	48-126	04/13/2010 2238
3-Nitroaniline	ND	82	37		1	46	10-110	04/13/2010 2238
4-Nitroaniline	ND	82	50		1	62	41-99	04/13/2010 2238
Nitrobenzene	ND	41	20		1	50	44-91	04/13/2010 2238
2-Nitrophenol	ND	82	43		1	53	34-102	04/13/2010 2238
4-Nitrophenol	ND	200	140		1	71	29-122	04/13/2010 2238
N-Nitrosodi-n-propylamine	ND	41	16	N	1	39	41-96	04/13/2010 2238
N-Nitrosodiphenylamine (Diphenylamine)	ND	41	25		1	62	10-150	04/13/2010 2238
Pentachlorophenol	ND	200	130		1	64	32-110	04/13/2010 2238
Phenanthrene	ND	41	24		1	59	49-122	04/13/2010 2238
Phenol	ND	41	17		1	41	33-92	04/13/2010 2238
Pyrene	ND	41	25		1	60	50-130	04/13/2010 2238
2,4,5-Trichlorophenol	ND	41	21		1	52	46-125	04/13/2010 2238
2,4,6-Trichlorophenol	ND	41	19		1	47	36-123	04/13/2010 2238

Surrogate	Q	% Rec	Acceptance Limit
2-Fluorobiphenyl		39	37-129
2-Fluorophenol		41	24-127
Nitrobenzene-d5		46	38-127
Phenol-d5		39	28-128
Terphenyl-d14		40	10-148
2,4,6-Tribromophenol		63	41-144

PQL = Practical quantitation limit
ND = Not detected at or above the MDL
P = The RPD between two GC columns exceeds 40%
J = Estimated result < PQL and ≥ MDL
N - Recovery is out of criteria
+ - RPD is out of criteria

Where applicable, all soil sample analysis are reported on a dry weight basis unless flagged with a "W"

Note: Calculations are performed before rounding to avoid round-off errors in calculated results

Semivolatile Organic Compounds by GC/MS - MSD

Sample ID: LD09009-001MD
Batch: 31258
Analytical Method: 8270D

Matrix: Aqueous
Prep Method: 3520C
Prep Date: 04/11/2010 1745

Parameter	Sample Amount (ug/L)	Spike Amount (ug/L)	Result (ug/L)	Q	Dil	% Rec	% RPD	% Rec Limit	% RPD Limit	Analysis Date
Acenaphthene	ND	42	22		1	54	21	10-133	40	04/13/2010 2257
Acenaphthylene	ND	42	26		1	62	14	34-128	40	04/13/2010 2257
Anthracene	ND	42	25		1	60	5.9	48-122	40	04/13/2010 2257
Benzo(a)anthracene	ND	42	26		1	62	14	53-98	40	04/13/2010 2257
Benzo(a)pyrene	ND	42	36	+	1	88	54	11-160	40	04/13/2010 2257
Benzo(b)fluoranthene	ND	42	40	+	1	95	67	10-165	40	04/13/2010 2257
Benzo(g,h,i)perylene	ND	42	32	+	1	76	55	42-111	40	04/13/2010 2257
Benzo(k)fluoranthene	ND	42	39	+	1	93	72	13-175	40	04/13/2010 2257
4-Bromophenyl phenyl ether	ND	42	26		1	62	13	49-123	40	04/13/2010 2257
Butyl benzyl phthalate	ND	42	28		1	67	13	52-142	40	04/13/2010 2257
Carbazole	ND	42	17	N,+	1	40	49	45-101	40	04/13/2010 2257
4-Chloro-3-methyl phenol	ND	42	22		1	53	9.0	40-98	40	04/13/2010 2257
4-Chloroaniline	ND	42	ND	N,+	1	0.00	200	10-98	40	04/13/2010 2257
bis(2-Chloroethoxy)methane	ND	42	18	N	1	42	9.1	43-93	40	04/13/2010 2257
bis(2-Chloroethyl)ether	ND	42	18		1	44	7.5	41-88	40	04/13/2010 2257
bis(2-Chloroisopropyl)ether	ND	42	17		1	41	8.7	36-99	40	04/13/2010 2257
2-Chloronaphthalene	ND	42	21		1	51	21	40-89	40	04/13/2010 2257
2-Chlorophenol	ND	42	19		1	45	6.5	33-92	40	04/13/2010 2257
4-Chlorophenyl phenyl ether	ND	42	24		1	58	18	34-124	40	04/13/2010 2257
Chrysene	ND	42	27		1	66	28	51-107	40	04/13/2010 2257
Dibenzo(a,h)anthracene	ND	42	38	+	1	91	73	47-116	40	04/13/2010 2257
Dibenzofuran	ND	42	23		1	56	18	45-94	40	04/13/2010 2257
2,4-Dichlorophenol	ND	42	19		1	47	15	34-105	40	04/13/2010 2257
Diethylphthalate	ND	42	27		1	66	10	48-124	40	04/13/2010 2257
Dimethyl phthalate	ND	42	26		1	63	10	43-122	40	04/13/2010 2257
2,4-Dimethylphenol	ND	42	20		1	47	17	33-77	40	04/13/2010 2257
Di-n-butyl phthalate	ND	42	28		1	67	13	50-134	40	04/13/2010 2257
4,6-Dinitro-2-methylphenol	ND	210	170		1	81	0.96	33-118	40	04/13/2010 2257
2,4-Dinitrophenol	ND	210	170		1	80	4.1	19-119	40	04/13/2010 2257
2,4-Dinitrotoluene	ND	83	77		1	92	4.9	50-104	40	04/13/2010 2257
2,6-Dinitrotoluene	ND	83	56		1	67	8.7	53-128	40	04/13/2010 2257
Di-n-octylphthalate	ND	42	38	+	1	91	80	40-112	40	04/13/2010 2257
bis(2-Ethylhexyl)phthalate	ND	42	26	+	1	63	47	10-142	40	04/13/2010 2257
Fluoranthene	ND	42	26		1	63	7.4	50-124	40	04/13/2010 2257
Fluorene	ND	42	25		1	60	17	39-122	40	04/13/2010 2257
Hexachlorobenzene	ND	42	26		1	62	17	46-125	40	04/13/2010 2257
Hexachlorobutadiene	ND	42	19		1	46	8.6	42-94	40	04/13/2010 2257
Hexachlorocyclopentadiene	ND	210	87		1	42	15	14-89	40	04/13/2010 2257
Hexachloroethane	ND	42	19		1	45	4.7	39-86	40	04/13/2010 2257
Indeno(1,2,3-c,d)pyrene	ND	42	36	+	1	87	68	43-113	40	04/13/2010 2257
Isophorone	ND	42	21		1	51	25	42-84	40	04/13/2010 2257
2-Methylnaphthalene	ND	42	20		1	47	16	46-90	40	04/13/2010 2257
2-Methylphenol	ND	42	21		1	50	0.37	33-122	40	04/13/2010 2257
3 & 4-Methylphenol	ND	83	35		1	42	10	24-97	40	04/13/2010 2257

PQL = Practical quantitation limit
ND = Not detected at or above the MDL
P = The RPD between two GC columns exceeds 40%
J = Estimated result < PQL and ≥ MDL
N - Recovery is out of criteria
+ - RPD is out of criteria

Where applicable, all soil sample analysis are reported on a dry weight basis unless flagged with a "W"

Note: Calculations are performed before rounding to avoid round-off errors in calculated results

Semivolatile Organic Compounds by GC/MS - MSD

Sample ID: LD09009-001MD
Batch: 31258
Analytical Method: 8270D

Matrix: Aqueous
Prep Method: 3520C
Prep Date: 04/11/2010 1745

Parameter	Sample Amount (ug/L)	Spike Amount (ug/L)	Result (ug/L)	Q	Dil	% Rec	% RPD	% Rec Limit	% RPD Limit	Analysis Date
Naphthalene	ND	42	19	N	1	45	11	46-89	40	04/13/2010 2257
2-Nitroaniline	ND	83	51		1	61	2.8	48-126	40	04/13/2010 2257
3-Nitroaniline	ND	83	ND	N,+	1	0.00	200	10-110	40	04/13/2010 2257
4-Nitroaniline	ND	83	6.9	N,+	1	8.2	150	41-99	40	04/13/2010 2257
Nitrobenzene	ND	42	22		1	52	6.2	44-91	40	04/13/2010 2257
2-Nitrophenol	ND	83	47		1	57	9.1	34-102	40	04/13/2010 2257
4-Nitrophenol	ND	210	140		1	66	5.0	29-122	40	04/13/2010 2257
N-Nitrosodi-n-propylamine	ND	42	21		1	50	27	41-96	40	04/13/2010 2257
N-Nitrosodiphenylamine (Diphenylamine)	ND	42	13	+	1	32	63	10-150	40	04/13/2010 2257
Pentachlorophenol	ND	210	130		1	63	0.37	32-110	40	04/13/2010 2257
Phenanthrene	ND	42	27		1	64	10	49-122	40	04/13/2010 2257
Phenol	ND	42	18		1	44	8.8	33-92	40	04/13/2010 2257
Pyrene	ND	42	27		1	66	10	50-130	40	04/13/2010 2257
2,4,5-Trichlorophenol	ND	42	24		1	58	12	46-125	40	04/13/2010 2257
2,4,6-Trichlorophenol	ND	42	23		1	54	17	36-123	40	04/13/2010 2257

Surrogate	Q	% Rec	Acceptance Limit
2-Fluorobiphenyl		48	37-129
2-Fluorophenol		43	24-127
Nitrobenzene-d5		48	38-127
Phenol-d5		42	28-128
Terphenyl-d14		53	10-148
2,4,6-Tribromophenol		65	41-144

PQL = Practical quantitation limit
ND = Not detected at or above the MDL
P = The RPD between two GC columns exceeds 40%
J = Estimated result < PQL and ≥ MDL
N - Recovery is out of criteria
+ - RPD is out of criteria

Where applicable, all soil sample analysis are reported on a dry weight basis unless flagged with a "W"

Note: Calculations are performed before rounding to avoid round-off errors in calculated results

RCRA Metals - MB

Sample ID: LQ31332-001
Batch: 31332
Analytical Method: 6010C

Matrix: Aqueous
Prep Method: 3005A
Prep Date: 04/12/2010 1845

Parameter	Result	Q	Dil	PQL	MDL	Units	Analysis Date
Arsenic	0.0042	J	1	0.010	0.0040	mg/L	04/13/2010 2330
Barium	ND		1	0.025	0.0075	mg/L	04/13/2010 2330
Cadmium	ND		1	0.0020	0.00060	mg/L	04/13/2010 2330
Chromium	ND		1	0.0050	0.0021	mg/L	04/13/2010 2330
Lead	ND		1	0.010	0.0019	mg/L	04/13/2010 2330
Selenium	ND		1	0.010	0.0026	mg/L	04/13/2010 2330
Silver	0.0040	J	1	0.0050	0.00040	mg/L	04/13/2010 2330

PQL = Practical quantitation limit
ND = Not detected at or above the MDL
P = The RPD between two GC columns exceeds 40%
J = Estimated result < PQL and ≥ MDL
N - Recovery is out of criteria
+ - RPD is out of criteria

Where applicable, all soil sample analysis are reported on a dry weight basis unless flagged with a "W"

Note: Calculations are performed before rounding to avoid round-off errors in calculated results

RCRA Metals - LCS

Sample ID: LQ31332-002
Batch: 31332
Analytical Method: 6010C

Matrix: Aqueous
Prep Method: 3005A
Prep Date: 04/12/2010 1845

Parameter	Spike Amount (mg/L)	Result (mg/L)	Q	Dil	% Rec	% Rec Limit	Analysis Date
Arsenic	0.40	0.39		1	98	80-120	04/13/2010 2334
Barium	2.0	1.9		1	95	80-120	04/13/2010 2334
Cadmium	0.40	0.40		1	100	80-120	04/13/2010 2334
Chromium	2.0	2.0		1	102	80-120	04/13/2010 2334
Lead	0.40	0.41		1	103	80-120	04/13/2010 2334
Selenium	0.40	0.42		1	105	80-120	04/13/2010 2334
Silver	0.40	0.37		1	93	80-120	04/13/2010 2334

PQL = Practical quantitation limit
ND = Not detected at or above the MDL
P = The RPD between two GC columns exceeds 40%
J = Estimated result < PQL and ≥ MDL
N - Recovery is out of criteria
+ - RPD is out of criteria

Where applicable, all soil sample analysis are reported on a dry weight basis unless flagged with a "W"

Note: Calculations are performed before rounding to avoid round-off errors in calculated results

RCRA Metals - LCSD

Sample ID: LQ31332-003
Batch: 31332
Analytical Method: 6010C

Matrix: Aqueous
Prep Method: 3005A
Prep Date: 04/12/2010 1845

Parameter	Spike Amount (mg/L)	Result (mg/L)	Q	Dil	% Rec	% RPD	% Rec Limit	% RPD Limit	Analysis Date
Arsenic	0.40	0.40		1	101	2.3	80-120	20	04/13/2010 2339
Barium	2.0	2.0		1	99	3.6	80-120	20	04/13/2010 2339
Cadmium	0.40	0.40		1	101	1.5	80-120	20	04/13/2010 2339
Chromium	2.0	2.1		1	104	1.7	80-120	20	04/13/2010 2339
Lead	0.40	0.42		1	105	1.8	80-120	20	04/13/2010 2339
Selenium	0.40	0.43		1	107	2.4	80-120	20	04/13/2010 2339
Silver	0.40	0.38		1	95	1.6	80-120	20	04/13/2010 2339

PQL = Practical quantitation limit
ND = Not detected at or above the MDL
P = The RPD between two GC columns exceeds 40%
J = Estimated result < PQL and ≥ MDL
N - Recovery is out of criteria
+ - RPD is out of criteria

Where applicable, all soil sample analysis are reported on a dry weight basis unless flagged with a "W"

Note: Calculations are performed before rounding to avoid round-off errors in calculated results

RCRA Metals - MB

Sample ID: LQ31319-001
Batch: 31319
Analytical Method: 7470A

Matrix: Aqueous
Prep Method: 7470A
Prep Date: 04/12/2010 1645

Parameter	Result	Q	Dil	PQL	MDL	Units	Analysis Date
Mercury	ND		1	0.00010	0.000053	mg/L	04/12/2010 2116

PQL = Practical quantitation limit
ND = Not detected at or above the MDL
P = The RPD between two GC columns exceeds 40%
J = Estimated result < PQL and ≥ MDL
N - Recovery is out of criteria
+ - RPD is out of criteria

Where applicable, all soil sample analysis are reported on a dry weight basis unless flagged with a "W"

Note: Calculations are performed before rounding to avoid round-off errors in calculated results

RCRA Metals - LCS

Sample ID: LQ31319-002
Batch: 31319
Analytical Method: 7470A

Matrix: Aqueous
Prep Method: 7470A
Prep Date: 04/12/2010 1645

Parameter	Spike Amount (mg/L)	Result (mg/L)	Q	Dil	% Rec	% Rec Limit	Analysis Date
Mercury	0.0020	0.0021		1	104	85-115	04/12/2010 2119

PQL = Practical quantitation limit
ND = Not detected at or above the MDL
P = The RPD between two GC columns exceeds 40%
J = Estimated result < PQL and ≥ MDL
N - Recovery is out of criteria
+ - RPD is out of criteria

Where applicable, all soil sample analysis are reported on a dry weight basis unless flagged with a "W"

Note: Calculations are performed before rounding to avoid round-off errors in calculated results

RCRA Metals - LCSD

Sample ID: LQ31319-003
Batch: 31319
Analytical Method: 7470A

Matrix: Aqueous
Prep Method: 7470A
Prep Date: 04/12/2010 1645

Parameter	Spike Amount (mg/L)	Result (mg/L)	Q	Dil	% Rec	% RPD	% Rec Limit	% RPD Limit	Analysis Date
Mercury	0.0020	0.0019		1	97	7.4	85-115	20	04/12/2010 2121

PQL = Practical quantitation limit
ND = Not detected at or above the MDL
P = The RPD between two GC columns exceeds 40%
J = Estimated result < PQL and ≥ MDL
N - Recovery is out of criteria
+ - RPD is out of criteria

Where applicable, all soil sample analysis are reported on a dry weight basis unless flagged with a "W"

Note: Calculations are performed before rounding to avoid round-off errors in calculated results

SHEALY **Chain of Custody Record**

SHEALY ENVIRONMENTAL SERVICES, INC.
106 Vantage Point Drive
West Columbia, South Carolina 29172
Telephone No. (803) 791-9700 Fax No. (803) 791-9111

Number 103929

Client: Arcadis
Address: 801 corporate center drive ste 320
City: Raleigh | State: NC | Zip Code: 27607
Project Name: FST39
Project No: GP09HAFSF39DG0F1
P.O. No.:

Report to Contact: Shelly Gibbons
Sampler's Signature: x Cecilia Bell
Printed Name: Cecilia Bell

Telephone No. / Fax No. / E-mail: 919/854-1282 Shelly.gibbons@arcadis-us.com
Waybill No.:
Quote No.:
Page 1 of 1

Analysis (Attach list if more space is needed.)

Lot No.: LD09009

Sample ID / Description (Containers for each sample may be combined on one line.)	Date	Time	Grab/Comp	Aqueous	Solid	Non-Aqueous	Unpres.	H2SO4	HNO3	HCl	NaOH	5035 kit	8260B VOCs	8270 SVOCs	6010 Metals	Remarks / Cooler I.D.
G4MW034 (040610)	4/6/10	1400	G	X			2		1	3			3	2	1	
G4MW035 (040610)	4/6/10	1630	G	X			2		1	3			3	2	1	
G4MW036 (040610)	4/6/10	1845	G	X			2		1	3			3	2	1	
G4MW033 (040710)	4/7/10	2000	G	X			2		1	3			3	2	1	
TRIP Blank (040810)	4/8/10	—											2			

Cecilia Bell 04/08/10

Possible Hazard Identification: ☐ Non-Hazard ☐ Flammable ☐ Skin Irritant ☐ Poison ☒ Unknown

Sample Disposal: ☐ Return to Client ☒ Disposal by Lab

Note: All samples are retained for six weeks from receipt unless other arrangements are made.

Turn Around Time Required (Prior lab approval required for expedited TAT.): ☒ Standard ☐ Rush (Specify)

QC Requirements (Specify):

1. Relinquished by: Cecilia Bell	Date: 04/08/10	Time: 1100	1. Received by: 8625 8723 4102 FedEx	Date: 04/08/10	Time: 1100
2. Relinquished by:	Date:	Time:	2. Received by:	Date:	Time:
3. Relinquished by: FED EX	Date: 4.9.10	Time: 0830	3. Laboratory received by:	Date: 4.9.10	Time: 0830

Comments:

LAB USE ONLY
Received on ice (Circle) Yes No Ice Pack
Receipt Temp. 1.7 °C

DISTRIBUTION: WHITE & YELLOW-Return to laboratory with Sample(s); PINK-Field/Client Copy

Document Number: F-AD-012 Effective Date: 08-04-02

Shealy Environmental Services, Inc.
Document Number: F-AD-016
Revision Number: 6

Page 1 of 1
Replaces Date: 09/22/06
Effective Date: 05/29/07

Sample Receipt Checklist (SRC)

Client: Arcadis Cooler Inspected by/date: [illegible] 4/9/10 Lot #: LD09009

Means of receipt: ☐ SESI ☐ Client ☐ UPS ☑ FedEx ☐ Airborne Exp ☐ Other

Yes ☑	No ☐	NA ☐	1. Were custody seals present on the cooler?
Yes ☑	No ☐	NA ☐	2. If custody seals were present, were they intact and unbroken?

Cooler ID/temperature upon receipt: 1.7 °C ___/___ °C ___/___ °C ___/___ °C ___/___ °C ___/___ °C ___/___ °C ___/___ °C

Method: ☐ Temperature Blank ☑ Against Bottles
Method of coolant: ☑ Wet Ice ☐ Blue Ice ☐ Dry Ice ☐ None

If response is No (or Yes for 14, 15, 16), an explanation/resolution must be provided.

Yes ☐	No ☐	NA ☑	3. If temperature of any cooler exceeded 6.0°C, was Project Manager notified? PM notified by SRC, phone, note (circle one), other: _____. (For coolers received via commercial courier, PMs are to be notified immediately.
Yes ☑	No ☐	NA ☐	4. Is the commercial courier's packing slip attached to this form?
Yes ☑	No ☐	NA ☐	5. Were proper custody procedures (relinquished/received) followed?
Yes ☑	No ☐	NA ☐	6. Were sample IDs listed?
Yes ☑	No ☐	NA ☐	7. Was collection date & time listed?
Yes ☑	No ☐	NA ☐	8. Were tests to be performed listed on the COC or was quote # provided?
Yes ☑	No ☐	NA ☐	9. Did all samples arrive in the proper containers for each test?
Yes ☑	No ☐	NA ☐	10. Did all container label information (ID, date, time) agree with COC?
Yes ☑	No ☐	NA ☐	11. Did all containers arrive in good condition (unbroken, lids on, etc.)?
Yes ☑	No ☐	NA ☐	12. Was adequate sample volume available?
Yes ☐	No ☑	NA ☐	13. Were all samples received within ½ the holding time or 48 hours, whichever comes first?
Yes ☐	No ☑	NA ☐	14. Were any samples containers missing?
Yes ☐	No ☑	NA ☐	15. Were there any excess samples not listed on COC?
Yes ☐	No ☑	NA ☐	16. Were bubbles present >"pea-size" (¼"or 6mm in diameter) in any VOA vials?
Yes ☑	No ☐	NA ☐	17. Were all metals/O&G/HEM/nutrient samples received at a pH of <2?
Yes ☐	No ☐	NA ☑	18. Were all cyanide and/or sulfide samples received at a pH >12?
Yes ☐	No ☐	NA ☑	19. Were all applicable NH3/TKN/cyanide/phenol/BNA/pest/PCB/herb (<0.2mg/L) and toxicity (<0.1mg/L) samples free of residual chlorine?
Yes ☐	No ☐	NA ☑	20. Were collection temperatures documented on the COC for NC samples?

Sample Preservation (Must be completed for any sample(s) incorrectly preserved or with headspace.)

Sample(s) _____ were received incorrectly preserved and were adjusted accordingly in sample receiving with _____ (H_2SO_4,HNO_3,HCl,NaOH) with the SR # (number)

Sample(s) _____ were received with bubbles >6 mm in diameter.

Sample(s) _____ were received with TRC >0.2 mg/L for NH3/TKN/cyanide/BNA/pest/PCB/herb.

Toxicity sample(s) _____ were received with TRC >0.2 mg/L for NH3/TKN/cyanide/BNA/pest/PCB/herb. analyzed by method 330.5.

Corrective Action taken, if necessary:
Was client notified: Yes ☐ No ☐
SESI employee: _____
Comments: _____

This portion can be removed for recipient's records.
Date
FedEx Tracking Number 862587234102
Sender's Name
Phone
Company ARCADIS
Address 2849 PACES FERRY RD SE STE 400
Dept/Floor/Suite/Room
City ATLANTA State GA ZIP 30339-3769
Your Internal Billing Reference

Report of Analysis

ARCADIS U.S., Inc.
30 Patewood Drive
Suite 155
Greenville, SC 29615
Attention: Chase Forman

Project Name: SWMU-39 Hunter Stewart

Project Number: GP09HAFS.F39A.DG0FI

Lot Number: LD01022

Date Completed: 04/15/2010

Nisreen Saikaly
Project Manager

This report shall not be reproduced, except in its entirety, without the written approval of Shealy Environmental Services, Inc.

The following non-paginated documents are considered part of this report: Chain of Custody Record and Sample Receipt Checklist.

* L D 0 1 0 2 2 *

Case Narrative
ARCADIS U.S., Inc.
Lot Number: LD01022

This Report of Analysis contains the analytical result(s) for the sample(s) listed on the Sample Summary following this Case Narrative. The sample receiving date is documented in the header information associated with each sample.

Sample receipt, sample analysis, and data review have been performed in accordance with the most current approved NELAC standards, the Shealy Environmental Services, Inc. ("Shealy") Quality Assurance Management Plan (QAMP), standard operating procedures (SOPs), and Shealy policies. Any exceptions to the NELAC standards, the QAMP, SOPs or policies are qualified on the results page or discussed below.

If you have any questions regarding this report please contact the Shealy Project Manager listed on the cover page.

Semivolatile Organic Compounds

The surrogate recovery for sample -002, and -009 was outside the acceptance limit. The sample was re-extracted outside the holding time. Both analysis results are reported.
The LCS recovery for Carbazole exceeded method control limits in batch 30843 ; however, all other QA/QC criteria for the LCS/LCSD were within acceptance criteria and method control limits. The associated sample results were non-detect, therefore the results were reported and no corrective action was required.

The MS/MSD recoveries in batch 30843 were outside acceptance criteria. All other QA/QC criteria for the batch were within acceptance criteria and method control limits. The MS/MSD recovery results are attributed to matrix interference. The associated sample results were reported and no corrective action was required.

Volatile Organic Compounds

The MS/MSD recoveries in batch 30893 were outside acceptance criteria. All other QA/QC criteria for the batch were within acceptance criteria and method control limits. The MS/MSD recovery results are attributed to matrix interference. The associated sample results were reported and no corrective action was required.

Sample Summary

ARCADIS U.S., Inc.

Lot Number: LD01022

Sample Number	Sample ID	Matrix	Date Sampled	Date Received
001	DUP-3	Aqueous	03/30/2010 0700	04/01/2010
002	F39TW02 (40-45)	Aqueous	03/30/2010 0907	04/01/2010
003	F39TW02 (10-15)	Aqueous	03/30/2010 1000	04/01/2010
004	F39TW02 (30-35)	Aqueous	03/30/2010 1355	04/01/2010
005	F39TW02 (20-25)	Aqueous	03/30/2010 1408	04/01/2010
006	F39TW01 (30-35)	Aqueous	03/30/2010 1710	04/01/2010
007	F39TW01 (20-25)	Aqueous	03/30/2010 1730	04/01/2010
008	F39TW01 (10-15)	Aqueous	03/31/2010 0820	04/01/2010
009	F39TW03 (40-45)	Aqueous	03/31/2010 1120	04/01/2010
010	F39TW03 (10-15)	Aqueous	03/31/2010 1129	04/01/2010
011	F39TW03 (30-35)	Aqueous	03/31/2010 1446	04/01/2010
012	F39TW03 (20-25)	Aqueous	03/31/2010 1500	04/01/2010
013	TRIP BLANK (033110)	Aqueous	04/01/2010 0845	04/01/2010
014	F39TW04 (10-15)	Aqueous	04/01/2010 0854	04/06/2010
015	F39TW04 (40-45)	Aqueous	04/01/2010 0925	04/06/2010
016	F39TW04 (30-35)	Aqueous	04/01/2010 1517	04/06/2010
017	F39TW04 (20-25)	Aqueous	04/01/2010 1533	04/06/2010
018	Trip Blank (040110)	Aqueous	04/06/2010 0830	04/06/2010

(18 samples)

Executive Summary
ARCADIS U.S., Inc.
Lot Number: LD01022

Sample	Sample ID	Matrix	Parameter	Method	Result	Q	Units	Page
001	DUP-3	Aqueous	Acetone	8260B	4.5	J	ug/L	7
001	DUP-3	Aqueous	Carbon disulfide	8260B	0.41	J	ug/L	7
001	DUP-3	Aqueous	trans-1,2-Dichloroethene	8260B	4.4		ug/L	7
001	DUP-3	Aqueous	cis-1,2-Dichloroethene	8260B	16		ug/L	7
001	DUP-3	Aqueous	Methylene chloride	8260B	0.21	BJ	ug/L	7
001	DUP-3	Aqueous	Trichloroethene	8260B	28		ug/L	8
001	DUP-3	Aqueous	Caprolactam	8270D	2.1	J	ug/L	9
002	F39TW02 (40-45)	Aqueous	Acetone	8260B	6.3	J	ug/L	11
002	F39TW02 (40-45)	Aqueous	Carbon disulfide	8260B	0.45	J	ug/L	11
003	F39TW02 (10-15)	Aqueous	Acetone	8260B	8.8	J	ug/L	17
003	F39TW02 (10-15)	Aqueous	Carbon disulfide	8260B	0.24	J	ug/L	17
003	F39TW02 (10-15)	Aqueous	Methylene chloride	8260B	0.20	BJ	ug/L	17
003	F39TW02 (10-15)	Aqueous	Diethylphthalate	8270D	2.4	J	ug/L	19
004	F39TW02 (30-35)	Aqueous	Acetone	8260B	12		ug/L	21
004	F39TW02 (30-35)	Aqueous	Benzene	8260B	0.59		ug/L	21
004	F39TW02 (30-35)	Aqueous	Carbon disulfide	8260B	0.33	J	ug/L	21
004	F39TW02 (30-35)	Aqueous	1,1-Dichloroethane	8260B	1.3		ug/L	21
004	F39TW02 (30-35)	Aqueous	trans-1,2-Dichloroethene	8260B	0.99		ug/L	21
004	F39TW02 (30-35)	Aqueous	1,1-Dichloroethene	8260B	0.83		ug/L	21
004	F39TW02 (30-35)	Aqueous	cis-1,2-Dichloroethene	8260B	11		ug/L	21
004	F39TW02 (30-35)	Aqueous	Toluene	8260B	0.18	J	ug/L	21
004	F39TW02 (30-35)	Aqueous	Trichloroethene	8260B	12		ug/L	22
005	F39TW02 (20-25)	Aqueous	Acetone	8260B	6.3	J	ug/L	25
005	F39TW02 (20-25)	Aqueous	Carbon disulfide	8260B	0.33	J	ug/L	25
005	F39TW02 (20-25)	Aqueous	trans-1,2-Dichloroethene	8260B	4.6		ug/L	25
005	F39TW02 (20-25)	Aqueous	1,1-Dichloroethene	8260B	0.21	J	ug/L	25
005	F39TW02 (20-25)	Aqueous	cis-1,2-Dichloroethene	8260B	16		ug/L	25
005	F39TW02 (20-25)	Aqueous	Trichloroethene	8260B	30		ug/L	26
006	F39TW01 (30-35)	Aqueous	Acetone	8260B	27		ug/L	29
006	F39TW01 (30-35)	Aqueous	Benzene	8260B	0.17	J	ug/L	29
006	F39TW01 (30-35)	Aqueous	Carbon disulfide	8260B	0.56		ug/L	29
006	F39TW01 (30-35)	Aqueous	cis-1,2-Dichloroethene	8260B	0.29	J	ug/L	29
006	F39TW01 (30-35)	Aqueous	2-Hexanone	8260B	0.33	J	ug/L	29
006	F39TW01 (30-35)	Aqueous	Toluene	8260B	0.23	J	ug/L	29
006	F39TW01 (30-35)	Aqueous	Trichloroethene	8260B	0.20	J	ug/L	30
006	F39TW01 (30-35)	Aqueous	Butyl benzyl phthalate	8270D	2.2	J	ug/L	31
006	F39TW01 (30-35)	Aqueous	Diethylphthalate	8270D	2.3	J	ug/L	31
007	F39TW01 (20-25)	Aqueous	Acetone	8260B	2.9	J	ug/L	33
007	F39TW01 (20-25)	Aqueous	Benzene	8260B	0.53		ug/L	33
007	F39TW01 (20-25)	Aqueous	Carbon disulfide	8260B	0.23	J	ug/L	33
007	F39TW01 (20-25)	Aqueous	trans-1,2-Dichloroethene	8260B	0.33	J	ug/L	33
007	F39TW01 (20-25)	Aqueous	1,1-Dichloroethene	8260B	0.10	J	ug/L	33
007	F39TW01 (20-25)	Aqueous	cis-1,2-Dichloroethene	8260B	4.4		ug/L	33
007	F39TW01 (20-25)	Aqueous	Tetrachloroethene	8260B	40		ug/L	33
007	F39TW01 (20-25)	Aqueous	Trichloroethene	8260B	40		ug/L	34

Sample	Sample ID	Matrix	Parameter	Method	Result	Q	Units	Page
008	F39TW01 (10-15)	Aqueous	Acetone	8260B	4.6	J	ug/L	37
008	F39TW01 (10-15)	Aqueous	Benzene	8260B	0.23	J	ug/L	37
008	F39TW01 (10-15)	Aqueous	trans-1,2-Dichloroethene	8260B	1.2		ug/L	37
008	F39TW01 (10-15)	Aqueous	1,1-Dichloroethene	8260B	0.15	J	ug/L	37
008	F39TW01 (10-15)	Aqueous	cis-1,2-Dichloroethene	8260B	6.2		ug/L	37
008	F39TW01 (10-15)	Aqueous	Methylene chloride	8260B	0.18	BJ	ug/L	37
008	F39TW01 (10-15)	Aqueous	Tetrachloroethene	8260B	7.1		ug/L	37
008	F39TW01 (10-15)	Aqueous	Trichloroethene	8260B	43		ug/L	38
009	F39TW03 (40-45)	Aqueous	Acetone	8260B	5.2	J	ug/L	41
009	F39TW03 (40-45)	Aqueous	Methylene chloride	8260B	0.20	BJ	ug/L	41
010	F39TW03 (10-15)	Aqueous	Acetone	8260B	5.0	J	ug/L	47
010	F39TW03 (10-15)	Aqueous	1,1-Dichloroethene	8260B	0.19	J	ug/L	47
010	F39TW03 (10-15)	Aqueous	cis-1,2-Dichloroethene	8260B	0.28	J	ug/L	47
010	F39TW03 (10-15)	Aqueous	Methylene chloride	8260B	0.18	BJ	ug/L	47
010	F39TW03 (10-15)	Aqueous	Trichloroethene	8260B	0.37	J	ug/L	48
011	F39TW03 (30-35)	Aqueous	Acetone	8260B	2.4	J	ug/L	51
011	F39TW03 (30-35)	Aqueous	Benzene	8260B	2.2		ug/L	51
011	F39TW03 (30-35)	Aqueous	1,1-Dichloroethane	8260B	1.4		ug/L	51
011	F39TW03 (30-35)	Aqueous	trans-1,2-Dichloroethene	8260B	0.62		ug/L	51
011	F39TW03 (30-35)	Aqueous	1,1-Dichloroethene	8260B	2.4		ug/L	51
011	F39TW03 (30-35)	Aqueous	cis-1,2-Dichloroethene	8260B	10		ug/L	51
011	F39TW03 (30-35)	Aqueous	Methylene chloride	8260B	0.20	BJ	ug/L	51
011	F39TW03 (30-35)	Aqueous	Tetrachloroethene	8260B	0.32	J	ug/L	51
011	F39TW03 (30-35)	Aqueous	Trichloroethene	8260B	20		ug/L	52
012	F39TW03 (20-25)	Aqueous	Acetone	8260B	3.4	J	ug/L	55
012	F39TW03 (20-25)	Aqueous	Carbon disulfide	8260B	0.14	J	ug/L	55
012	F39TW03 (20-25)	Aqueous	1,1-Dichloroethane	8260B	0.82		ug/L	55
012	F39TW03 (20-25)	Aqueous	trans-1,2-Dichloroethene	8260B	0.28	J	ug/L	55
012	F39TW03 (20-25)	Aqueous	1,1-Dichloroethene	8260B	1.7		ug/L	55
012	F39TW03 (20-25)	Aqueous	cis-1,2-Dichloroethene	8260B	3.9		ug/L	55
012	F39TW03 (20-25)	Aqueous	Methylene chloride	8260B	0.17	BJ	ug/L	55
012	F39TW03 (20-25)	Aqueous	Trichloroethene	8260B	4.1		ug/L	56
013	TRIP BLANK (033110)	Aqueous	Acetone	8260B	5.0	J	ug/L	59
013	TRIP BLANK (033110)	Aqueous	Carbon disulfide	8260B	0.19	J	ug/L	59
014	F39TW04 (10-15)	Aqueous	Acetone	8260B	3.5	J	ug/L	61
014	F39TW04 (10-15)	Aqueous	Benzene	8260B	0.33	J	ug/L	61
014	F39TW04 (10-15)	Aqueous	Carbon disulfide	8260B	0.18	J	ug/L	61
014	F39TW04 (10-15)	Aqueous	trans-1,2-Dichloroethene	8260B	0.58		ug/L	61
014	F39TW04 (10-15)	Aqueous	cis-1,2-Dichloroethene	8260B	2.2		ug/L	61
014	F39TW04 (10-15)	Aqueous	Methylene chloride	8260B	0.19	BJ	ug/L	61
014	F39TW04 (10-15)	Aqueous	Tetrachloroethene	8260B	4.6		ug/L	61
014	F39TW04 (10-15)	Aqueous	Trichloroethene	8260B	14		ug/L	62
015	F39TW04 (40-45)	Aqueous	Acetone	8260B	8.6	J	ug/L	65
015	F39TW04 (40-45)	Aqueous	Benzene	8260B	0.13	J	ug/L	65
015	F39TW04 (40-45)	Aqueous	Carbon disulfide	8260B	1.3		ug/L	65
015	F39TW04 (40-45)	Aqueous	2-Hexanone	8260B	0.27	J	ug/L	65
015	F39TW04 (40-45)	Aqueous	Methylene chloride	8260B	0.20	BJ	ug/L	65
015	F39TW04 (40-45)	Aqueous	Caprolactam	8270D	14		ug/L	67

Sample	Sample ID	Matrix	Parameter	Method	Result	Q	Units	Page
016	F39TW04 (30-35)	Aqueous	Acetone	8260B	5.8	J	ug/L	69
016	F39TW04 (30-35)	Aqueous	Benzene	8260B	0.92		ug/L	69
016	F39TW04 (30-35)	Aqueous	Carbon disulfide	8260B	0.80		ug/L	69
016	F39TW04 (30-35)	Aqueous	1,1-Dichloroethene	8260B	0.15	J	ug/L	69
016	F39TW04 (30-35)	Aqueous	cis-1,2-Dichloroethene	8260B	5.6		ug/L	69
016	F39TW04 (30-35)	Aqueous	Methylene chloride	8260B	0.17	BJ	ug/L	69
016	F39TW04 (30-35)	Aqueous	Tetrachloroethene	8260B	55		ug/L	69
016	F39TW04 (30-35)	Aqueous	Trichloroethene	8260B	43		ug/L	70
017	F39TW04 (20-25)	Aqueous	Acetone	8260B	4.3	J	ug/L	73
017	F39TW04 (20-25)	Aqueous	Benzene	8260B	0.39	J	ug/L	73
017	F39TW04 (20-25)	Aqueous	Carbon disulfide	8260B	0.40	J	ug/L	73
017	F39TW04 (20-25)	Aqueous	trans-1,2-Dichloroethene	8260B	0.57		ug/L	73
017	F39TW04 (20-25)	Aqueous	cis-1,2-Dichloroethene	8260B	2.4		ug/L	73
017	F39TW04 (20-25)	Aqueous	Methylene chloride	8260B	0.17	BJ	ug/L	73
017	F39TW04 (20-25)	Aqueous	Tetrachloroethene	8260B	6.8		ug/L	73
017	F39TW04 (20-25)	Aqueous	Trichloroethene	8260B	12		ug/L	74
018	Trip Blank (040110)	Aqueous	Methylene chloride	8260B	0.20	BJ	ug/L	77

(110 detections)

Volatile Organic Compounds by GC/MS

Client: ARCADIS U.S., Inc.
Laboratory ID: LD01022-001
Description: DUP-3
Matrix: Aqueous
Date Sampled: 03/30/2010 0700
Date Received: 04/01/2010

Run	Prep Method	Analytical Method	Dilution	Analysis Date	Analyst	Prep Date	Batch
1	5030B	8260B	1	04/02/2010 1911	LBS		30899

Parameter	CAS Number	Analytical Method	Result	Q	PQL	MDL	Units	Run
Acetone	67-64-1	8260B	4.5	J	10	0.061	ug/L	1
Benzene	71-43-2	8260B	ND		0.50	0.027	ug/L	1
Bromodichloromethane	75-27-4	8260B	ND		0.50	0.17	ug/L	1
Bromoform	75-25-2	8260B	ND		0.50	0.010	ug/L	1
Bromomethane (Methyl bromide)	74-83-9	8260B	ND		0.50	0.20	ug/L	1
2-Butanone (MEK)	78-93-3	8260B	ND		10	2.0	ug/L	1
Carbon disulfide	75-15-0	8260B	0.41	J	0.50	0.097	ug/L	1
Carbon tetrachloride	56-23-5	8260B	ND		0.50	0.085	ug/L	1
Chlorobenzene	108-90-7	8260B	ND		0.50	0.17	ug/L	1
Chloroethane	75-00-3	8260B	ND		0.50	0.17	ug/L	1
Chloroform	67-66-3	8260B	ND		0.50	0.17	ug/L	1
Chloromethane (Methyl chloride)	74-87-3	8260B	ND		0.50	0.17	ug/L	1
Cyclohexane	110-82-7	8260B	ND		0.50	0.30	ug/L	1
1,2-Dibromo-3-chloropropane (DBCP)	96-12-8	8260B	ND		0.50	0.069	ug/L	1
Dibromochloromethane	124-48-1	8260B	ND		0.50	0.17	ug/L	1
1,2-Dibromoethane (EDB)	106-93-4	8260B	ND		0.50	0.061	ug/L	1
1,3-Dichlorobenzene	541-73-1	8260B	ND		0.50	0.17	ug/L	1
1,2-Dichlorobenzene	95-50-1	8260B	ND		0.50	0.17	ug/L	1
1,4-Dichlorobenzene	106-46-7	8260B	ND		0.50	0.17	ug/L	1
Dichlorodifluoromethane	75-71-8	8260B	ND		0.50	0.071	ug/L	1
1,1-Dichloroethane	75-34-3	8260B	ND		0.50	0.054	ug/L	1
1,2-Dichloroethane	107-06-2	8260B	ND		0.50	0.023	ug/L	1
trans-1,2-Dichloroethene	156-60-5	8260B	4.4		0.50	0.079	ug/L	1
1,1-Dichloroethene	75-35-4	8260B	ND		0.50	0.094	ug/L	1
cis-1,2-Dichloroethene	156-59-2	8260B	16		0.50	0.087	ug/L	1
1,2-Dichloropropane	78-87-5	8260B	ND		0.50	0.081	ug/L	1
trans-1,3-Dichloropropene	10061-02-6	8260B	ND		0.50	0.18	ug/L	1
cis-1,3-Dichloropropene	10061-01-5	8260B	ND		0.50	0.090	ug/L	1
Ethylbenzene	100-41-4	8260B	ND		0.50	0.17	ug/L	1
2-Hexanone	591-78-6	8260B	ND		10	0.27	ug/L	1
Isopropylbenzene	98-82-8	8260B	ND		0.50	0.029	ug/L	1
Methyl acetate	79-20-9	8260B	ND		1.0	0.30	ug/L	1
Methyl tertiary butyl ether (MTBE)	1634-04-4	8260B	ND		0.50	0.019	ug/L	1
4-Methyl-2-pentanone	108-10-1	8260B	ND		10	0.31	ug/L	1
Methylcyclohexane	108-87-2	8260B	ND		5.0	0.95	ug/L	1
Methylene chloride	75-09-2	8260B	0.21	BJ	0.50	0.17	ug/L	1
Styrene	100-42-5	8260B	ND		0.50	0.015	ug/L	1
1,1,2,2-Tetrachloroethane	79-34-5	8260B	ND		0.50	0.013	ug/L	1
Tetrachloroethene	127-18-4	8260B	ND		0.50	0.014	ug/L	1
Toluene	108-88-3	8260B	ND		0.50	0.17	ug/L	1
1,1,2-Trichloro-1,2,2-Trifluoroethane	76-13-1	8260B	ND		0.50	0.30	ug/L	1
1,2,4-Trichlorobenzene	120-82-1	8260B	ND		0.50	0.17	ug/L	1
1,1,1-Trichloroethane	71-55-6	8260B	ND		0.50	0.029	ug/L	1
1,1,2-Trichloroethane	79-00-5	8260B	ND		0.50	0.031	ug/L	1

PQL = Practical quantitation limit
B = Detected in the method blank
E = Quantitation of compound exceeded the calibration range
ND = Not detected at or above the MDL
J = Estimated result < PQL and ≥ MDL
P = The RPD between two GC columns exceeds 40%
Where applicable, all soil sample analysis are reported on a dry weight basis unless flagged with a "W"
N = Recovery is out of criteria
H = Out of holding time

Volatile Organic Compounds by GC/MS

Client: ARCADIS U.S., Inc.
Laboratory ID: LD01022-001
Description: DUP-3
Matrix: Aqueous
Date Sampled: 03/30/2010 0700
Date Received: 04/01/2010

Run	Prep Method	Analytical Method	Dilution	Analysis Date	Analyst	Prep Date	Batch
1	5030B	8260B	1	04/02/2010 1911	LBS		30899

Parameter	CAS Number	Analytical Method	Result	Q	PQL	MDL	Units	Run
Trichloroethene	79-01-6	8260B	28		0.50	0.024	ug/L	1
Trichlorofluoromethane	75-69-4	8260B	ND		0.50	0.051	ug/L	1
Vinyl chloride	75-01-4	8260B	ND		0.50	0.065	ug/L	1
Xylenes (total)	1330-20-7	8260B	ND		0.50	0.17	ug/L	1

Surrogate	Q	Run 1 % Recovery	Acceptance Limits
1,2-Dichloroethane-d4		113	70-130
Bromofluorobenzene		96	70-130
Toluene-d8		108	70-130

PQL = Practical quantitation limit
B = Detected in the method blank
E = Quantitation of compound exceeded the calibration range
ND = Not detected at or above the MDL
J = Estimated result < PQL and ≥ MDL
P = The RPD between two GC columns exceeds 40%
Where applicable, all soil sample analysis are reported on a dry weight basis unless flagged with a "W"
N = Recovery is out of criteria
H = Out of holding time

Semivolatile Organic Compounds by GC/MS

Client: ARCADIS U.S., Inc.
Laboratory ID: LD01022-001
Description: DUP-3
Matrix: Aqueous
Date Sampled: 03/30/2010 0700
Date Received: 04/01/2010

Run	Prep Method	Analytical Method	Dilution	Analysis Date	Analyst	Prep Date	Batch
1	3520C	8270D	1	04/06/2010 1258	WD	04/02/2010 2357	30843

Parameter	CAS Number	Analytical Method	Result	Q	PQL	MDL	Units	Run
Acenaphthene	83-32-9	8270D	ND		1.0	0.092	ug/L	1
Acenaphthylene	208-96-8	8270D	ND		1.0	0.16	ug/L	1
Acetophenone	98-86-2	8270D	ND		1.0	0.33	ug/L	1
Anthracene	120-12-7	8270D	ND		1.0	0.13	ug/L	1
Atrazine	1912-24-9	8270D	ND		1.0	0.20	ug/L	1
Benzaldehyde	100-52-7	8270D	ND		5.1	1.0	ug/L	1
Benzo(a)anthracene	56-55-3	8270D	ND		1.0	0.15	ug/L	1
Benzo(a)pyrene	50-32-8	8270D	ND		1.0	0.16	ug/L	1
Benzo(b)fluoranthene	205-99-2	8270D	ND		1.0	0.20	ug/L	1
Benzo(g,h,i)perylene	191-24-2	8270D	ND		1.0	0.23	ug/L	1
Benzo(k)fluoranthene	207-08-9	8270D	ND		1.0	0.12	ug/L	1
1,1'-Biphenyl	92-52-4	8270D	ND		1.0	0.20	ug/L	1
4-Bromophenyl phenyl ether	101-55-3	8270D	ND		1.0	0.12	ug/L	1
Butyl benzyl phthalate	85-68-7	8270D	ND		5.1	1.7	ug/L	1
Caprolactam	105-60-2	8270D	2.1	J	5.1	1.2	ug/L	1
Carbazole	86-74-8	8270D	ND		1.0	0.26	ug/L	1
4-Chloro-3-methyl phenol	59-50-7	8270D	ND		1.0	0.22	ug/L	1
4-Chloroaniline	106-47-8	8270D	ND		1.0	0.13	ug/L	1
bis(2-Chloroethoxy)methane	111-91-1	8270D	ND		1.0	0.13	ug/L	1
bis(2-Chloroethyl)ether	111-44-4	8270D	ND		1.0	0.13	ug/L	1
bis(2-Chloroisopropyl)ether	108-60-1	8270D	ND		1.0	0.082	ug/L	1
2-Chloronaphthalene	91-58-7	8270D	ND		1.0	0.12	ug/L	1
2-Chlorophenol	95-57-8	8270D	ND		1.0	0.13	ug/L	1
4-Chlorophenyl phenyl ether	7005-72-3	8270D	ND		1.0	0.11	ug/L	1
Chrysene	218-01-9	8270D	ND		1.0	0.12	ug/L	1
Dibenzo(a,h)anthracene	53-70-3	8270D	ND		1.0	0.13	ug/L	1
Dibenzofuran	132-64-9	8270D	ND		1.0	0.16	ug/L	1
3,3'-Dichlorobenzidine	91-94-1	8270D	ND		5.1	0.83	ug/L	1
2,4-Dichlorophenol	120-83-2	8270D	ND		1.0	0.15	ug/L	1
Diethylphthalate	84-66-2	8270D	ND		5.1	1.7	ug/L	1
Dimethyl phthalate	131-11-3	8270D	ND		5.1	1.7	ug/L	1
2,4-Dimethylphenol	105-67-9	8270D	ND		1.0	0.32	ug/L	1
Di-n-butyl phthalate	84-74-2	8270D	ND		5.1	1.7	ug/L	1
4,6-Dinitro-2-methylphenol	534-52-1	8270D	ND		5.1	1.5	ug/L	1
2,4-Dinitrophenol	51-28-5	8270D	ND		5.1	0.26	ug/L	1
2,4-Dinitrotoluene	121-14-2	8270D	ND		2.0	0.46	ug/L	1
2,6-Dinitrotoluene	606-20-2	8270D	ND		2.0	0.41	ug/L	1
Di-n-octylphthalate	117-84-0	8270D	ND		5.1	1.7	ug/L	1
bis(2-Ethylhexyl)phthalate	117-81-7	8270D	ND		5.1	1.7	ug/L	1
Fluoranthene	206-44-0	8270D	ND		1.0	0.21	ug/L	1
Fluorene	86-73-7	8270D	ND		1.0	0.10	ug/L	1
Hexachlorobenzene	118-74-1	8270D	ND		1.0	0.21	ug/L	1
Hexachlorobutadiene	87-68-3	8270D	ND		1.0	0.092	ug/L	1
Hexachlorocyclopentadiene	77-47-4	8270D	ND		5.1	0.23	ug/L	1

PQL = Practical quantitation limit
B = Detected in the method blank
E = Quantitation of compound exceeded the calibration range
ND = Not detected at or above the MDL
J = Estimated result < PQL and ≥ MDL
P = The RPD between two GC columns exceeds 40%
Where applicable, all soil sample analysis are reported on a dry weight basis unless flagged with a "W"
N = Recovery is out of criteria
H = Out of holding time

Semivolatile Organic Compounds by GC/MS

Client: ARCADIS U.S., Inc.
Laboratory ID: LD01022-001
Description: DUP-3
Matrix: Aqueous
Date Sampled: 03/30/2010 0700
Date Received: 04/01/2010

Run	Prep Method	Analytical Method	Dilution	Analysis Date	Analyst	Prep Date	Batch
1	3520C	8270D	1	04/06/2010 1258	WD	04/02/2010 2357	30843

Parameter	CAS Number	Analytical Method	Result	Q	PQL	MDL	Units	Run
Hexachloroethane	67-72-1	8270D	ND		1.0	0.11	ug/L	1
Indeno(1,2,3-c,d)pyrene	193-39-5	8270D	ND		1.0	0.23	ug/L	1
Isophorone	78-59-1	8270D	ND		1.0	0.082	ug/L	1
2-Methylnaphthalene	91-57-6	8270D	ND		1.0	0.082	ug/L	1
2-Methylphenol	95-48-7	8270D	ND		1.0	0.17	ug/L	1
3 & 4-Methylphenol	106-44-5	8270D	ND		2.0	0.58	ug/L	1
Naphthalene	91-20-3	8270D	ND		1.0	0.071	ug/L	1
2-Nitroaniline	88-74-4	8270D	ND		2.0	0.56	ug/L	1
3-Nitroaniline	99-09-2	8270D	ND		2.0	0.79	ug/L	1
4-Nitroaniline	100-01-6	8270D	ND		2.0	0.40	ug/L	1
Nitrobenzene	98-95-3	8270D	ND		1.0	0.10	ug/L	1
2-Nitrophenol	88-75-5	8270D	ND		2.0	0.28	ug/L	1
4-Nitrophenol	100-02-7	8270D	ND		5.1	0.65	ug/L	1
N-Nitrosodi-n-propylamine	621-64-7	8270D	ND		1.0	0.082	ug/L	1
N-Nitrosodiphenylamine (Diphenylamine)	86-30-6	8270D	ND		1.0	0.39	ug/L	1
Pentachlorophenol	87-86-5	8270D	ND		5.1	0.55	ug/L	1
Phenanthrene	85-01-8	8270D	ND		1.0	0.18	ug/L	1
Phenol	108-95-2	8270D	ND		1.0	0.11	ug/L	1
Pyrene	129-00-0	8270D	ND		1.0	0.16	ug/L	1
2,4,5-Trichlorophenol	95-95-4	8270D	ND		1.0	0.18	ug/L	1
2,4,6-Trichlorophenol	88-06-2	8270D	ND		1.0	0.22	ug/L	1

Surrogate	Q	Run 1 % Recovery	Acceptance Limits
2-Fluorobiphenyl		82	37-129
2-Fluorophenol		70	24-127
Nitrobenzene-d5		81	38-127
Phenol-d5		67	28-128
Terphenyl-d14		58	10-148
2,4,6-Tribromophenol		106	41-144

PQL = Practical quantitation limit
B = Detected in the method blank
E = Quantitation of compound exceeded the calibration range
ND = Not detected at or above the MDL
J = Estimated result < PQL and ≥ MDL
P = The RPD between two GC columns exceeds 40%
Where applicable, all soil sample analysis are reported on a dry weight basis unless flagged with a "W"
N = Recovery is out of criteria
H = Out of holding time

Volatile Organic Compounds by GC/MS

Client: ARCADIS U.S., Inc.
Laboratory ID: LD01022-002
Description: F39TW02 (40-45)
Matrix: Aqueous
Date Sampled: 03/30/2010 0907
Date Received: 04/01/2010

Run	Prep Method	Analytical Method	Dilution	Analysis Date	Analyst	Prep Date	Batch
1	5030B	8260B	1	04/03/2010 0355	LBS		30897

Parameter	CAS Number	Analytical Method	Result	Q	PQL	MDL	Units	Run
Acetone	67-64-1	8260B	6.3	J	10	0.061	ug/L	1
Benzene	71-43-2	8260B	ND		0.50	0.027	ug/L	1
Bromodichloromethane	75-27-4	8260B	ND		0.50	0.17	ug/L	1
Bromoform	75-25-2	8260B	ND		0.50	0.010	ug/L	1
Bromomethane (Methyl bromide)	74-83-9	8260B	ND		0.50	0.20	ug/L	1
2-Butanone (MEK)	78-93-3	8260B	ND		10	2.0	ug/L	1
Carbon disulfide	75-15-0	8260B	0.45	J	0.50	0.097	ug/L	1
Carbon tetrachloride	56-23-5	8260B	ND		0.50	0.085	ug/L	1
Chlorobenzene	108-90-7	8260B	ND		0.50	0.17	ug/L	1
Chloroethane	75-00-3	8260B	ND		0.50	0.17	ug/L	1
Chloroform	67-66-3	8260B	ND		0.50	0.17	ug/L	1
Chloromethane (Methyl chloride)	74-87-3	8260B	ND		0.50	0.17	ug/L	1
Cyclohexane	110-82-7	8260B	ND		0.50	0.30	ug/L	1
1,2-Dibromo-3-chloropropane (DBCP)	96-12-8	8260B	ND		0.50	0.069	ug/L	1
Dibromochloromethane	124-48-1	8260B	ND		0.50	0.17	ug/L	1
1,2-Dibromoethane (EDB)	106-93-4	8260B	ND		0.50	0.061	ug/L	1
1,3-Dichlorobenzene	541-73-1	8260B	ND		0.50	0.17	ug/L	1
1,2-Dichlorobenzene	95-50-1	8260B	ND		0.50	0.17	ug/L	1
1,4-Dichlorobenzene	106-46-7	8260B	ND		0.50	0.17	ug/L	1
Dichlorodifluoromethane	75-71-8	8260B	ND		0.50	0.071	ug/L	1
1,1-Dichloroethane	75-34-3	8260B	ND		0.50	0.054	ug/L	1
1,2-Dichloroethane	107-06-2	8260B	ND		0.50	0.023	ug/L	1
trans-1,2-Dichloroethene	156-60-5	8260B	ND		0.50	0.079	ug/L	1
1,1-Dichloroethene	75-35-4	8260B	ND		0.50	0.094	ug/L	1
cis-1,2-Dichloroethene	156-59-2	8260B	ND		0.50	0.087	ug/L	1
1,2-Dichloropropane	78-87-5	8260B	ND		0.50	0.081	ug/L	1
trans-1,3-Dichloropropene	10061-02-6	8260B	ND		0.50	0.18	ug/L	1
cis-1,3-Dichloropropene	10061-01-5	8260B	ND		0.50	0.090	ug/L	1
Ethylbenzene	100-41-4	8260B	ND		0.50	0.17	ug/L	1
2-Hexanone	591-78-6	8260B	ND		10	0.27	ug/L	1
Isopropylbenzene	98-82-8	8260B	ND		0.50	0.029	ug/L	1
Methyl acetate	79-20-9	8260B	ND		1.0	0.30	ug/L	1
Methyl tertiary butyl ether (MTBE)	1634-04-4	8260B	ND		0.50	0.019	ug/L	1
4-Methyl-2-pentanone	108-10-1	8260B	ND		10	0.31	ug/L	1
Methylcyclohexane	108-87-2	8260B	ND		5.0	0.95	ug/L	1
Methylene chloride	75-09-2	8260B	ND		0.50	0.17	ug/L	1
Styrene	100-42-5	8260B	ND		0.50	0.015	ug/L	1
1,1,2,2-Tetrachloroethane	79-34-5	8260B	ND		0.50	0.013	ug/L	1
Tetrachloroethene	127-18-4	8260B	ND		0.50	0.014	ug/L	1
Toluene	108-88-3	8260B	ND		0.50	0.17	ug/L	1
1,1,2-Trichloro-1,2,2-Trifluoroethane	76-13-1	8260B	ND		0.50	0.30	ug/L	1
1,2,4-Trichlorobenzene	120-82-1	8260B	ND		0.50	0.17	ug/L	1
1,1,1-Trichloroethane	71-55-6	8260B	ND		0.50	0.029	ug/L	1
1,1,2-Trichloroethane	79-00-5	8260B	ND		0.50	0.031	ug/L	1

PQL = Practical quantitation limit
B = Detected in the method blank
E = Quantitation of compound exceeded the calibration range
ND = Not detected at or above the MDL
J = Estimated result < PQL and ≥ MDL
P = The RPD between two GC columns exceeds 40%
Where applicable, all soil sample analysis are reported on a dry weight basis unless flagged with a "W"
N = Recovery is out of criteria
H = Out of holding time

Volatile Organic Compounds by GC/MS

Client: ARCADIS U.S., Inc.
Laboratory ID: LD01022-002
Description: F39TW02 (40-45)
Matrix: Aqueous
Date Sampled: 03/30/2010 0907
Date Received: 04/01/2010

Run	Prep Method	Analytical Method	Dilution	Analysis Date	Analyst	Prep Date	Batch
1	5030B	8260B	1	04/03/2010 0355	LBS		30897

Parameter	CAS Number	Analytical Method	Result	Q	PQL	MDL	Units	Run
Trichloroethene	79-01-6	8260B	ND		0.50	0.024	ug/L	1
Trichlorofluoromethane	75-69-4	8260B	ND		0.50	0.051	ug/L	1
Vinyl chloride	75-01-4	8260B	ND		0.50	0.065	ug/L	1
Xylenes (total)	1330-20-7	8260B	ND		0.50	0.17	ug/L	1

Surrogate	Q	Run 1 % Recovery	Acceptance Limits
1,2-Dichloroethane-d4		108	70-130
Bromofluorobenzene		99	70-130
Toluene-d8		108	70-130

PQL = Practical quantitation limit
B = Detected in the method blank
E = Quantitation of compound exceeded the calibration range
ND = Not detected at or above the MDL
J = Estimated result < PQL and ≥ MDL
P = The RPD between two GC columns exceeds 40%
Where applicable, all soil sample analysis are reported on a dry weight basis unless flagged with a "W"
N = Recovery is out of criteria
H = Out of holding time

Semivolatile Organic Compounds by GC/MS

Client: ARCADIS U.S., Inc.
Laboratory ID: LD01022-002
Description: F39TW02 (40-45)
Matrix: Aqueous
Date Sampled: 03/30/2010 0907
Date Received: 04/01/2010

Run	Prep Method	Analytical Method	Dilution	Analysis Date	Analyst	Prep Date	Batch
1	3520C	8270D	1	04/08/2010 1743	JGH	04/02/2010 2357	30843
2	3520C	8270D	1	04/13/2010 1520	JGH	04/09/2010 1700	31216

Parameter	CAS Number	Analytical Method	Result	Q	PQL	MDL	Units	Run
Acenaphthene	83-32-9	8270D	ND		1.0	0.093	ug/L	1
Acenaphthylene	208-96-8	8270D	ND		1.0	0.16	ug/L	1
Acetophenone	98-86-2	8270D	ND		1.0	0.33	ug/L	1
Anthracene	120-12-7	8270D	ND		1.0	0.13	ug/L	1
Atrazine	1912-24-9	8270D	ND		1.0	0.21	ug/L	1
Benzaldehyde	100-52-7	8270D	ND		5.2	1.0	ug/L	1
Benzo(a)anthracene	56-55-3	8270D	ND		1.0	0.15	ug/L	1
Benzo(a)pyrene	50-32-8	8270D	ND		1.0	0.16	ug/L	1
Benzo(b)fluoranthene	205-99-2	8270D	ND		1.0	0.21	ug/L	1
Benzo(g,h,i)perylene	191-24-2	8270D	ND		1.0	0.24	ug/L	1
Benzo(k)fluoranthene	207-08-9	8270D	ND		1.0	0.12	ug/L	1
1,1'-Biphenyl	92-52-4	8270D	ND		1.0	0.21	ug/L	1
4-Bromophenyl phenyl ether	101-55-3	8270D	ND		1.0	0.12	ug/L	1
Butyl benzyl phthalate	85-68-7	8270D	ND		5.2	1.8	ug/L	1
Caprolactam	105-60-2	8270D	ND		5.2	1.2	ug/L	1
Carbazole	86-74-8	8270D	ND		1.0	0.26	ug/L	1
4-Chloro-3-methyl phenol	59-50-7	8270D	ND		1.0	0.23	ug/L	1
4-Chloroaniline	106-47-8	8270D	ND		1.0	0.13	ug/L	1
bis(2-Chloroethoxy)methane	111-91-1	8270D	ND		1.0	0.13	ug/L	1
bis(2-Chloroethyl)ether	111-44-4	8270D	ND		1.0	0.13	ug/L	1
bis(2-Chloroisopropyl)ether	108-60-1	8270D	ND		1.0	0.082	ug/L	1
2-Chloronaphthalene	91-58-7	8270D	ND		1.0	0.12	ug/L	1
2-Chlorophenol	95-57-8	8270D	ND		1.0	0.13	ug/L	1
4-Chlorophenyl phenyl ether	7005-72-3	8270D	ND		1.0	0.11	ug/L	1
Chrysene	218-01-9	8270D	ND		1.0	0.12	ug/L	1
Dibenzo(a,h)anthracene	53-70-3	8270D	ND		1.0	0.13	ug/L	1
Dibenzofuran	132-64-9	8270D	ND		1.0	0.16	ug/L	1
3,3'-Dichlorobenzidine	91-94-1	8270D	ND		5.2	0.84	ug/L	1
2,4-Dichlorophenol	120-83-2	8270D	ND		1.0	0.15	ug/L	1
Diethylphthalate	84-66-2	8270D	ND		5.2	1.8	ug/L	1
Dimethyl phthalate	131-11-3	8270D	ND		5.2	1.8	ug/L	1
2,4-Dimethylphenol	105-67-9	8270D	ND		1.0	0.32	ug/L	1
Di-n-butyl phthalate	84-74-2	8270D	ND		5.2	1.8	ug/L	1
4,6-Dinitro-2-methylphenol	534-52-1	8270D	ND		5.2	1.5	ug/L	1
2,4-Dinitrophenol	51-28-5	8270D	ND		5.2	0.26	ug/L	1
2,4-Dinitrotoluene	121-14-2	8270D	ND		2.1	0.46	ug/L	1
2,6-Dinitrotoluene	606-20-2	8270D	ND		2.1	0.41	ug/L	1
Di-n-octylphthalate	117-84-0	8270D	ND		5.2	1.8	ug/L	1
bis(2-Ethylhexyl)phthalate	117-81-7	8270D	ND		5.2	1.8	ug/L	1
Fluoranthene	206-44-0	8270D	ND		1.0	0.22	ug/L	1
Fluorene	86-73-7	8270D	ND		1.0	0.10	ug/L	1
Hexachlorobenzene	118-74-1	8270D	ND		1.0	0.22	ug/L	1
Hexachlorobutadiene	87-68-3	8270D	ND		1.0	0.093	ug/L	1

PQL = Practical quantitation limit
B = Detected in the method blank
E = Quantitation of compound exceeded the calibration range
ND = Not detected at or above the MDL
J = Estimated result < PQL and ≥ MDL
P = The RPD between two GC columns exceeds 40%
Where applicable, all soil sample analysis are reported on a dry weight basis unless flagged with a "W"
N = Recovery is out of criteria
H = Out of holding time

Semivolatile Organic Compounds by GC/MS

Client: ARCADIS U.S., Inc.
Laboratory ID: LD01022-002
Description: F39TW02 (40-45)
Matrix: Aqueous
Date Sampled: 03/30/2010 0907
Date Received: 04/01/2010

Run	Prep Method	Analytical Method	Dilution	Analysis Date	Analyst	Prep Date	Batch
1	3520C	8270D	1	04/08/2010 1743	JGH	04/02/2010 2357	30843
2	3520C	8270D	1	04/13/2010 1520	JGH	04/09/2010 1700	31216

Parameter	CAS Number	Analytical Method	Result	Q	PQL	MDL	Units	Run
Hexachlorocyclopentadiene	77-47-4	8270D	ND		5.2	0.24	ug/L	1
Hexachloroethane	67-72-1	8270D	ND		1.0	0.11	ug/L	1
Indeno(1,2,3-c,d)pyrene	193-39-5	8270D	ND		1.0	0.24	ug/L	1
Isophorone	78-59-1	8270D	ND		1.0	0.082	ug/L	1
2-Methylnaphthalene	91-57-6	8270D	ND		1.0	0.082	ug/L	1
2-Methylphenol	95-48-7	8270D	ND		1.0	0.18	ug/L	1
3 & 4-Methylphenol	106-44-5	8270D	ND		2.1	0.59	ug/L	1
Naphthalene	91-20-3	8270D	ND		1.0	0.072	ug/L	1
2-Nitroaniline	88-74-4	8270D	ND		2.1	0.57	ug/L	1
3-Nitroaniline	99-09-2	8270D	ND		2.1	0.79	ug/L	1
4-Nitroaniline	100-01-6	8270D	ND		2.1	0.40	ug/L	1
Nitrobenzene	98-95-3	8270D	ND		1.0	0.10	ug/L	1
2-Nitrophenol	88-75-5	8270D	ND		2.1	0.28	ug/L	1
4-Nitrophenol	100-02-7	8270D	ND		5.2	0.66	ug/L	1
N-Nitrosodi-n-propylamine	621-64-7	8270D	ND		1.0	0.082	ug/L	1
N-Nitrosodiphenylamine (Diphenylamine)	86-30-6	8270D	ND		1.0	0.39	ug/L	1
Pentachlorophenol	87-86-5	8270D	ND		5.2	0.56	ug/L	1
Phenanthrene	85-01-8	8270D	ND		1.0	0.19	ug/L	1
Phenol	108-95-2	8270D	ND		1.0	0.11	ug/L	1
Pyrene	129-00-0	8270D	ND		1.0	0.16	ug/L	1
2,4,5-Trichlorophenol	95-95-4	8270D	ND		1.0	0.19	ug/L	1
2,4,6-Trichlorophenol	88-06-2	8270D	ND		1.0	0.23	ug/L	1

Surrogate	Q	Run 1 % Recovery	Acceptance Limits	Q	Run 2 % Recovery	Acceptance Limits
2-Fluorobiphenyl		50	37-129	H	47	37-129
2-Fluorophenol		39	24-127	H	45	24-127
Nitrobenzene-d5	N	28	38-127	H	53	38-127
Phenol-d5		34	28-128	H	49	28-128
Terphenyl-d14		12	10-148	H	22	10-148
2,4,6-Tribromophenol		68	41-144	H	65	41-144

PQL = Practical quantitation limit
B = Detected in the method blank
E = Quantitation of compound exceeded the calibration range
ND = Not detected at or above the MDL
J = Estimated result < PQL and ≥ MDL
P = The RPD between two GC columns exceeds 40%
Where applicable, all soil sample analysis are reported on a dry weight basis unless flagged with a "W"
N = Recovery is out of criteria
H = Out of holding time

Semivolatile Organic Compounds by GC/MS

Client: ARCADIS U.S., Inc.
Laboratory ID: LD01022-002
Description: F39TW02 (40-45)
Matrix: Aqueous
Date Sampled: 03/30/2010 0907
Date Received: 04/01/2010

Run	Prep Method	Analytical Method	Dilution	Analysis Date	Analyst	Prep Date	Batch
1	3520C	8270D	1	04/08/2010 1743	JGH	04/02/2010 2357	30843
2	3520C	8270D	1	04/13/2010 1520	JGH	04/09/2010 1700	31216

Parameter	CAS Number	Analytical Method	Result	Q	PQL	MDL	Units	Run
Acenaphthene	83-32-9	8270D	ND	H	1.0	0.093	ug/L	2
Acenaphthylene	208-96-8	8270D	ND	H	1.0	0.16	ug/L	2
Acetophenone	98-86-2	8270D	ND	H	1.0	0.33	ug/L	2
Anthracene	120-12-7	8270D	ND	H	1.0	0.13	ug/L	2
Atrazine	1912-24-9	8270D	ND	H	1.0	0.21	ug/L	2
Benzaldehyde	100-52-7	8270D	ND	H	5.2	1.0	ug/L	2
Benzo(a)anthracene	56-55-3	8270D	ND	H	1.0	0.15	ug/L	2
Benzo(a)pyrene	50-32-8	8270D	ND	H	1.0	0.16	ug/L	2
Benzo(b)fluoranthene	205-99-2	8270D	ND	H	1.0	0.21	ug/L	2
Benzo(g,h,i)perylene	191-24-2	8270D	ND	H	1.0	0.24	ug/L	2
Benzo(k)fluoranthene	207-08-9	8270D	ND	H	1.0	0.12	ug/L	2
1,1'-Biphenyl	92-52-4	8270D	ND	H	1.0	0.21	ug/L	2
4-Bromophenyl phenyl ether	101-55-3	8270D	ND	H	1.0	0.12	ug/L	2
Butyl benzyl phthalate	85-68-7	8270D	ND	H	5.2	1.8	ug/L	2
Caprolactam	105-60-2	8270D	ND	H	5.2	1.2	ug/L	2
Carbazole	86-74-8	8270D	ND	H	1.0	0.26	ug/L	2
4-Chloro-3-methyl phenol	59-50-7	8270D	ND	H	1.0	0.23	ug/L	2
4-Chloroaniline	106-47-8	8270D	ND	H	1.0	0.13	ug/L	2
bis(2-Chloroethoxy)methane	111-91-1	8270D	ND	H	1.0	0.13	ug/L	2
bis(2-Chloroethyl)ether	111-44-4	8270D	ND	H	1.0	0.13	ug/L	2
bis(2-Chloroisopropyl)ether	108-60-1	8270D	ND	H	1.0	0.082	ug/L	2
2-Chloronaphthalene	91-58-7	8270D	ND	H	1.0	0.12	ug/L	2
2-Chlorophenol	95-57-8	8270D	ND	H	1.0	0.13	ug/L	2
4-Chlorophenyl phenyl ether	7005-72-3	8270D	ND	H	1.0	0.11	ug/L	2
Chrysene	218-01-9	8270D	ND	H	1.0	0.12	ug/L	2
Dibenzo(a,h)anthracene	53-70-3	8270D	ND	H	1.0	0.13	ug/L	2
Dibenzofuran	132-64-9	8270D	ND	H	1.0	0.16	ug/L	2
3,3'-Dichlorobenzidine	91-94-1	8270D	ND	H	5.2	0.84	ug/L	2
2,4-Dichlorophenol	120-83-2	8270D	ND	H	1.0	0.15	ug/L	2
Diethylphthalate	84-66-2	8270D	ND	H	5.2	1.8	ug/L	2
Dimethyl phthalate	131-11-3	8270D	ND	H	5.2	1.8	ug/L	2
2,4-Dimethylphenol	105-67-9	8270D	ND	H	1.0	0.32	ug/L	2
Di-n-butyl phthalate	84-74-2	8270D	ND	H	5.2	1.8	ug/L	2
4,6-Dinitro-2-methylphenol	534-52-1	8270D	ND	H	5.2	1.5	ug/L	2
2,4-Dinitrophenol	51-28-5	8270D	ND	H	5.2	0.26	ug/L	2
2,4-Dinitrotoluene	121-14-2	8270D	ND	H	2.1	0.46	ug/L	2
2,6-Dinitrotoluene	606-20-2	8270D	ND	H	2.1	0.41	ug/L	2
Di-n-octylphthalate	117-84-0	8270D	ND	H	5.2	1.8	ug/L	2
bis(2-Ethylhexyl)phthalate	117-81-7	8270D	ND	H	5.2	1.8	ug/L	2
Fluoranthene	206-44-0	8270D	ND	H	1.0	0.22	ug/L	2
Fluorene	86-73-7	8270D	ND	H	1.0	0.10	ug/L	2
Hexachlorobenzene	118-74-1	8270D	ND	H	1.0	0.22	ug/L	2
Hexachlorobutadiene	87-68-3	8270D	ND	H	1.0	0.093	ug/L	2

PQL = Practical quantitation limit
B = Detected in the method blank
E = Quantitation of compound exceeded the calibration range
ND = Not detected at or above the MDL
J = Estimated result < PQL and ≥ MDL
P = The RPD between two GC columns exceeds 40%
Where applicable, all soil sample analysis are reported on a dry weight basis unless flagged with a "W"
N = Recovery is out of criteria
H = Out of holding time

Semivolatile Organic Compounds by GC/MS

Client: ARCADIS U.S., Inc.
Laboratory ID: LD01022-002
Description: F39TW02 (40-45)
Matrix: Aqueous
Date Sampled: 03/30/2010 0907
Date Received: 04/01/2010

Run	Prep Method	Analytical Method	Dilution	Analysis Date	Analyst	Prep Date	Batch
1	3520C	8270D	1	04/08/2010 1743	JGH	04/02/2010 2357	30843
2	3520C	8270D	1	04/13/2010 1520	JGH	04/09/2010 1700	31216

Parameter	CAS Number	Analytical Method	Result	Q	PQL	MDL	Units	Run
Hexachlorocyclopentadiene	77-47-4	8270D	ND	H	5.2	0.24	ug/L	2
Hexachloroethane	67-72-1	8270D	ND	H	1.0	0.11	ug/L	2
Indeno(1,2,3-c,d)pyrene	193-39-5	8270D	ND	H	1.0	0.24	ug/L	2
Isophorone	78-59-1	8270D	ND	H	1.0	0.082	ug/L	2
2-Methylnaphthalene	91-57-6	8270D	ND	H	1.0	0.082	ug/L	2
2-Methylphenol	95-48-7	8270D	ND	H	1.0	0.18	ug/L	2
3 & 4-Methylphenol	106-44-5	8270D	ND	H	2.1	0.59	ug/L	2
Naphthalene	91-20-3	8270D	ND	H	1.0	0.072	ug/L	2
2-Nitroaniline	88-74-4	8270D	ND	H	2.1	0.57	ug/L	2
3-Nitroaniline	99-09-2	8270D	ND	H	2.1	0.79	ug/L	2
4-Nitroaniline	100-01-6	8270D	ND	H	2.1	0.40	ug/L	2
Nitrobenzene	98-95-3	8270D	ND	H	1.0	0.10	ug/L	2
2-Nitrophenol	88-75-5	8270D	ND	H	2.1	0.28	ug/L	2
4-Nitrophenol	100-02-7	8270D	ND	H	5.2	0.66	ug/L	2
N-Nitrosodi-n-propylamine	621-64-7	8270D	ND	H	1.0	0.082	ug/L	2
N-Nitrosodiphenylamine (Diphenylamine)	86-30-6	8270D	ND	H	1.0	0.39	ug/L	2
Pentachlorophenol	87-86-5	8270D	ND	H	5.2	0.56	ug/L	2
Phenanthrene	85-01-8	8270D	ND	H	1.0	0.19	ug/L	2
Phenol	108-95-2	8270D	ND	H	1.0	0.11	ug/L	2
Pyrene	129-00-0	8270D	ND	H	1.0	0.16	ug/L	2
2,4,5-Trichlorophenol	95-95-4	8270D	ND	H	1.0	0.19	ug/L	2
2,4,6-Trichlorophenol	88-06-2	8270D	ND	H	1.0	0.23	ug/L	2

Surrogate	Q	Run 1 % Recovery	Acceptance Limits	Q	Run 2 % Recovery	Acceptance Limits
2-Fluorobiphenyl		50	37-129	H	47	37-129
2-Fluorophenol		39	24-127	H	45	24-127
Nitrobenzene-d5	N	28	38-127	H	53	38-127
Phenol-d5		34	28-128	H	49	28-128
Terphenyl-d14		12	10-148	H	22	10-148
2,4,6-Tribromophenol		68	41-144	H	65	41-144

PQL = Practical quantitation limit
B = Detected in the method blank
E = Quantitation of compound exceeded the calibration range
ND = Not detected at or above the MDL
J = Estimated result < PQL and ≥ MDL
P = The RPD between two GC columns exceeds 40%
Where applicable, all soil sample analysis are reported on a dry weight basis unless flagged with a "W"
N = Recovery is out of criteria
H = Out of holding time

Volatile Organic Compounds by GC/MS

Client: ARCADIS U.S., Inc.
Laboratory ID: LD01022-003
Description: F39TW02 (10-15)
Matrix: Aqueous
Date Sampled: 03/30/2010 1000
Date Received: 04/01/2010

Run	Prep Method	Analytical Method	Dilution	Analysis Date	Analyst	Prep Date	Batch
1	5030B	8260B	1	04/02/2010 1933	LBS		30899

Parameter	CAS Number	Analytical Method	Result	Q	PQL	MDL	Units	Run
Acetone	67-64-1	8260B	8.8	J	10	0.061	ug/L	1
Benzene	71-43-2	8260B	ND		0.50	0.027	ug/L	1
Bromodichloromethane	75-27-4	8260B	ND		0.50	0.17	ug/L	1
Bromoform	75-25-2	8260B	ND		0.50	0.010	ug/L	1
Bromomethane (Methyl bromide)	74-83-9	8260B	ND		0.50	0.20	ug/L	1
2-Butanone (MEK)	78-93-3	8260B	ND		10	2.0	ug/L	1
Carbon disulfide	75-15-0	8260B	0.24	J	0.50	0.097	ug/L	1
Carbon tetrachloride	56-23-5	8260B	ND		0.50	0.085	ug/L	1
Chlorobenzene	108-90-7	8260B	ND		0.50	0.17	ug/L	1
Chloroethane	75-00-3	8260B	ND		0.50	0.17	ug/L	1
Chloroform	67-66-3	8260B	ND		0.50	0.17	ug/L	1
Chloromethane (Methyl chloride)	74-87-3	8260B	ND		0.50	0.17	ug/L	1
Cyclohexane	110-82-7	8260B	ND		0.50	0.30	ug/L	1
1,2-Dibromo-3-chloropropane (DBCP)	96-12-8	8260B	ND		0.50	0.069	ug/L	1
Dibromochloromethane	124-48-1	8260B	ND		0.50	0.17	ug/L	1
1,2-Dibromoethane (EDB)	106-93-4	8260B	ND		0.50	0.061	ug/L	1
1,3-Dichlorobenzene	541-73-1	8260B	ND		0.50	0.17	ug/L	1
1,2-Dichlorobenzene	95-50-1	8260B	ND		0.50	0.17	ug/L	1
1,4-Dichlorobenzene	106-46-7	8260B	ND		0.50	0.17	ug/L	1
Dichlorodifluoromethane	75-71-8	8260B	ND		0.50	0.071	ug/L	1
1,1-Dichloroethane	75-34-3	8260B	ND		0.50	0.054	ug/L	1
1,2-Dichloroethane	107-06-2	8260B	ND		0.50	0.023	ug/L	1
trans-1,2-Dichloroethene	156-60-5	8260B	ND		0.50	0.079	ug/L	1
1,1-Dichloroethene	75-35-4	8260B	ND		0.50	0.094	ug/L	1
cis-1,2-Dichloroethene	156-59-2	8260B	ND		0.50	0.087	ug/L	1
1,2-Dichloropropane	78-87-5	8260B	ND		0.50	0.081	ug/L	1
trans-1,3-Dichloropropene	10061-02-6	8260B	ND		0.50	0.18	ug/L	1
cis-1,3-Dichloropropene	10061-01-5	8260B	ND		0.50	0.090	ug/L	1
Ethylbenzene	100-41-4	8260B	ND		0.50	0.17	ug/L	1
2-Hexanone	591-78-6	8260B	ND		10	0.27	ug/L	1
Isopropylbenzene	98-82-8	8260B	ND		0.50	0.029	ug/L	1
Methyl acetate	79-20-9	8260B	ND		1.0	0.30	ug/L	1
Methyl tertiary butyl ether (MTBE)	1634-04-4	8260B	ND		0.50	0.019	ug/L	1
4-Methyl-2-pentanone	108-10-1	8260B	ND		10	0.31	ug/L	1
Methylcyclohexane	108-87-2	8260B	ND		5.0	0.95	ug/L	1
Methylene chloride	75-09-2	8260B	0.20	BJ	0.50	0.17	ug/L	1
Styrene	100-42-5	8260B	ND		0.50	0.015	ug/L	1
1,1,2,2-Tetrachloroethane	79-34-5	8260B	ND		0.50	0.013	ug/L	1
Tetrachloroethene	127-18-4	8260B	ND		0.50	0.014	ug/L	1
Toluene	108-88-3	8260B	ND		0.50	0.17	ug/L	1
1,1,2-Trichloro-1,2,2-Trifluoroethane	76-13-1	8260B	ND		0.50	0.30	ug/L	1
1,2,4-Trichlorobenzene	120-82-1	8260B	ND		0.50	0.17	ug/L	1
1,1,1-Trichloroethane	71-55-6	8260B	ND		0.50	0.029	ug/L	1
1,1,2-Trichloroethane	79-00-5	8260B	ND		0.50	0.031	ug/L	1

PQL = Practical quantitation limit
B = Detected in the method blank
E = Quantitation of compound exceeded the calibration range
ND = Not detected at or above the MDL
J = Estimated result < PQL and ≥ MDL
P = The RPD between two GC columns exceeds 40%
Where applicable, all soil sample analysis are reported on a dry weight basis unless flagged with a "W"
N = Recovery is out of criteria
H = Out of holding time

Volatile Organic Compounds by GC/MS

Client: ARCADIS U.S., Inc.
Laboratory ID: LD01022-003
Description: F39TW02 (10-15)
Matrix: Aqueous
Date Sampled: 03/30/2010 1000
Date Received: 04/01/2010

Run	Prep Method	Analytical Method	Dilution	Analysis Date	Analyst	Prep Date	Batch
1	5030B	8260B	1	04/02/2010 1933	LBS		30899

Parameter	CAS Number	Analytical Method	Result	Q	PQL	MDL	Units	Run
Trichloroethene	79-01-6	8260B	ND		0.50	0.024	ug/L	1
Trichlorofluoromethane	75-69-4	8260B	ND		0.50	0.051	ug/L	1
Vinyl chloride	75-01-4	8260B	ND		0.50	0.065	ug/L	1
Xylenes (total)	1330-20-7	8260B	ND		0.50	0.17	ug/L	1

Surrogate	Q	Run 1 % Recovery	Acceptance Limits
1,2-Dichloroethane-d4		114	70-130
Bromofluorobenzene		95	70-130
Toluene-d8		106	70-130

PQL = Practical quantitation limit
B = Detected in the method blank
E = Quantitation of compound exceeded the calibration range
ND = Not detected at or above the MDL
J = Estimated result < PQL and ≥ MDL
P = The RPD between two GC columns exceeds 40%
Where applicable, all soil sample analysis are reported on a dry weight basis unless flagged with a "W"
N = Recovery is out of criteria
H = Out of holding time

Semivolatile Organic Compounds by GC/MS

Client: ARCADIS U.S., Inc.
Laboratory ID: LD01022-003
Description: F39TW02 (10-15)
Matrix: Aqueous
Date Sampled: 03/30/2010 1000
Date Received: 04/01/2010

Run	Prep Method	Analytical Method	Dilution	Analysis Date	Analyst	Prep Date	Batch
1	3520C	8270D	1	04/06/2010 1440	WD	04/02/2010 2357	30843

Parameter	CAS Number	Analytical Method	Result	Q	PQL	MDL	Units	Run
Acenaphthene	83-32-9	8270D	ND		1.0	0.092	ug/L	1
Acenaphthylene	208-96-8	8270D	ND		1.0	0.16	ug/L	1
Acetophenone	98-86-2	8270D	ND		1.0	0.33	ug/L	1
Anthracene	120-12-7	8270D	ND		1.0	0.13	ug/L	1
Atrazine	1912-24-9	8270D	ND		1.0	0.20	ug/L	1
Benzaldehyde	100-52-7	8270D	ND		5.1	1.0	ug/L	1
Benzo(a)anthracene	56-55-3	8270D	ND		1.0	0.15	ug/L	1
Benzo(a)pyrene	50-32-8	8270D	ND		1.0	0.16	ug/L	1
Benzo(b)fluoranthene	205-99-2	8270D	ND		1.0	0.20	ug/L	1
Benzo(g,h,i)perylene	191-24-2	8270D	ND		1.0	0.23	ug/L	1
Benzo(k)fluoranthene	207-08-9	8270D	ND		1.0	0.12	ug/L	1
1,1'-Biphenyl	92-52-4	8270D	ND		1.0	0.20	ug/L	1
4-Bromophenyl phenyl ether	101-55-3	8270D	ND		1.0	0.12	ug/L	1
Butyl benzyl phthalate	85-68-7	8270D	ND		5.1	1.7	ug/L	1
Caprolactam	105-60-2	8270D	ND		5.1	1.2	ug/L	1
Carbazole	86-74-8	8270D	ND		1.0	0.26	ug/L	1
4-Chloro-3-methyl phenol	59-50-7	8270D	ND		1.0	0.22	ug/L	1
4-Chloroaniline	106-47-8	8270D	ND		1.0	0.13	ug/L	1
bis(2-Chloroethoxy)methane	111-91-1	8270D	ND		1.0	0.13	ug/L	1
bis(2-Chloroethyl)ether	111-44-4	8270D	ND		1.0	0.13	ug/L	1
bis(2-Chloroisopropyl)ether	108-60-1	8270D	ND		1.0	0.082	ug/L	1
2-Chloronaphthalene	91-58-7	8270D	ND		1.0	0.12	ug/L	1
2-Chlorophenol	95-57-8	8270D	ND		1.0	0.13	ug/L	1
4-Chlorophenyl phenyl ether	7005-72-3	8270D	ND		1.0	0.11	ug/L	1
Chrysene	218-01-9	8270D	ND		1.0	0.12	ug/L	1
Dibenzo(a,h)anthracene	53-70-3	8270D	ND		1.0	0.13	ug/L	1
Dibenzofuran	132-64-9	8270D	ND		1.0	0.16	ug/L	1
3,3'-Dichlorobenzidine	91-94-1	8270D	ND		5.1	0.83	ug/L	1
2,4-Dichlorophenol	120-83-2	8270D	ND		1.0	0.15	ug/L	1
Diethylphthalate	84-66-2	8270D	2.4	J	5.1	1.7	ug/L	1
Dimethyl phthalate	131-11-3	8270D	ND		5.1	1.7	ug/L	1
2,4-Dimethylphenol	105-67-9	8270D	ND		1.0	0.32	ug/L	1
Di-n-butyl phthalate	84-74-2	8270D	ND		5.1	1.7	ug/L	1
4,6-Dinitro-2-methylphenol	534-52-1	8270D	ND		5.1	1.5	ug/L	1
2,4-Dinitrophenol	51-28-5	8270D	ND		5.1	0.26	ug/L	1
2,4-Dinitrotoluene	121-14-2	8270D	ND		2.0	0.46	ug/L	1
2,6-Dinitrotoluene	606-20-2	8270D	ND		2.0	0.41	ug/L	1
Di-n-octylphthalate	117-84-0	8270D	ND		5.1	1.7	ug/L	1
bis(2-Ethylhexyl)phthalate	117-81-7	8270D	ND		5.1	1.7	ug/L	1
Fluoranthene	206-44-0	8270D	ND		1.0	0.21	ug/L	1
Fluorene	86-73-7	8270D	ND		1.0	0.10	ug/L	1
Hexachlorobenzene	118-74-1	8270D	ND		1.0	0.21	ug/L	1
Hexachlorobutadiene	87-68-3	8270D	ND		1.0	0.092	ug/L	1
Hexachlorocyclopentadiene	77-47-4	8270D	ND		5.1	0.23	ug/L	1

PQL = Practical quantitation limit
B = Detected in the method blank
E = Quantitation of compound exceeded the calibration range
ND = Not detected at or above the MDL
J = Estimated result < PQL and ≥ MDL
P = The RPD between two GC columns exceeds 40%
Where applicable, all soil sample analysis are reported on a dry weight basis unless flagged with a "W"
N = Recovery is out of criteria
H = Out of holding time

Semivolatile Organic Compounds by GC/MS

Client: ARCADIS U.S., Inc.
Laboratory ID: LD01022-003
Description: F39TW02 (10-15)
Matrix: Aqueous
Date Sampled: 03/30/2010 1000
Date Received: 04/01/2010

Run	Prep Method	Analytical Method	Dilution	Analysis Date	Analyst	Prep Date	Batch
1	3520C	8270D	1	04/06/2010 1440	WD	04/02/2010 2357	30843

Parameter	CAS Number	Analytical Method	Result	Q	PQL	MDL	Units	Run
Hexachloroethane	67-72-1	8270D	ND		1.0	0.11	ug/L	1
Indeno(1,2,3-c,d)pyrene	193-39-5	8270D	ND		1.0	0.23	ug/L	1
Isophorone	78-59-1	8270D	ND		1.0	0.082	ug/L	1
2-Methylnaphthalene	91-57-6	8270D	ND		1.0	0.082	ug/L	1
2-Methylphenol	95-48-7	8270D	ND		1.0	0.17	ug/L	1
3 & 4-Methylphenol	106-44-5	8270D	ND		2.0	0.58	ug/L	1
Naphthalene	91-20-3	8270D	ND		1.0	0.071	ug/L	1
2-Nitroaniline	88-74-4	8270D	ND		2.0	0.56	ug/L	1
3-Nitroaniline	99-09-2	8270D	ND		2.0	0.79	ug/L	1
4-Nitroaniline	100-01-6	8270D	ND		2.0	0.40	ug/L	1
Nitrobenzene	98-95-3	8270D	ND		1.0	0.10	ug/L	1
2-Nitrophenol	88-75-5	8270D	ND		2.0	0.28	ug/L	1
4-Nitrophenol	100-02-7	8270D	ND		5.1	0.65	ug/L	1
N-Nitrosodi-n-propylamine	621-64-7	8270D	ND		1.0	0.082	ug/L	1
N-Nitrosodiphenylamine (Diphenylamine)	86-30-6	8270D	ND		1.0	0.39	ug/L	1
Pentachlorophenol	87-86-5	8270D	ND		5.1	0.55	ug/L	1
Phenanthrene	85-01-8	8270D	ND		1.0	0.18	ug/L	1
Phenol	108-95-2	8270D	ND		1.0	0.11	ug/L	1
Pyrene	129-00-0	8270D	ND		1.0	0.16	ug/L	1
2,4,5-Trichlorophenol	95-95-4	8270D	ND		1.0	0.18	ug/L	1
2,4,6-Trichlorophenol	88-06-2	8270D	ND		1.0	0.22	ug/L	1

Surrogate	Q	Run 1 % Recovery	Acceptance Limits
2-Fluorobiphenyl		88	37-129
2-Fluorophenol		79	24-127
Nitrobenzene-d5		84	38-127
Phenol-d5		82	28-128
Terphenyl-d14		42	10-148
2,4,6-Tribromophenol		116	41-144

PQL = Practical quantitation limit
B = Detected in the method blank
E = Quantitation of compound exceeded the calibration range
ND = Not detected at or above the MDL
J = Estimated result < PQL and ≥ MDL
P = The RPD between two GC columns exceeds 40%
Where applicable, all soil sample analysis are reported on a dry weight basis unless flagged with a "W"
N = Recovery is out of criteria
H = Out of holding time

Volatile Organic Compounds by GC/MS

Client: ARCADIS U.S., Inc.
Laboratory ID: LD01022-004
Description: F39TW02 (30-35)
Matrix: Aqueous
Date Sampled: 03/30/2010 1355
Date Received: 04/01/2010

Run	Prep Method	Analytical Method	Dilution	Analysis Date	Analyst	Prep Date	Batch
1	5030B	8260B	1	04/03/2010 0417	LBS		30897

Parameter	CAS Number	Analytical Method	Result	Q	PQL	MDL	Units	Run
Acetone	67-64-1	8260B	12		10	0.061	ug/L	1
Benzene	71-43-2	8260B	0.59		0.50	0.027	ug/L	1
Bromodichloromethane	75-27-4	8260B	ND		0.50	0.17	ug/L	1
Bromoform	75-25-2	8260B	ND		0.50	0.010	ug/L	1
Bromomethane (Methyl bromide)	74-83-9	8260B	ND		0.50	0.20	ug/L	1
2-Butanone (MEK)	78-93-3	8260B	ND		10	2.0	ug/L	1
Carbon disulfide	75-15-0	8260B	0.33	J	0.50	0.097	ug/L	1
Carbon tetrachloride	56-23-5	8260B	ND		0.50	0.085	ug/L	1
Chlorobenzene	108-90-7	8260B	ND		0.50	0.17	ug/L	1
Chloroethane	75-00-3	8260B	ND		0.50	0.17	ug/L	1
Chloroform	67-66-3	8260B	ND		0.50	0.17	ug/L	1
Chloromethane (Methyl chloride)	74-87-3	8260B	ND		0.50	0.17	ug/L	1
Cyclohexane	110-82-7	8260B	ND		0.50	0.30	ug/L	1
1,2-Dibromo-3-chloropropane (DBCP)	96-12-8	8260B	ND		0.50	0.069	ug/L	1
Dibromochloromethane	124-48-1	8260B	ND		0.50	0.17	ug/L	1
1,2-Dibromoethane (EDB)	106-93-4	8260B	ND		0.50	0.061	ug/L	1
1,3-Dichlorobenzene	541-73-1	8260B	ND		0.50	0.17	ug/L	1
1,2-Dichlorobenzene	95-50-1	8260B	ND		0.50	0.17	ug/L	1
1,4-Dichlorobenzene	106-46-7	8260B	ND		0.50	0.17	ug/L	1
Dichlorodifluoromethane	75-71-8	8260B	ND		0.50	0.071	ug/L	1
1,1-Dichloroethane	75-34-3	8260B	1.3		0.50	0.054	ug/L	1
1,2-Dichloroethane	107-06-2	8260B	ND		0.50	0.023	ug/L	1
trans-1,2-Dichloroethene	156-60-5	8260B	0.99		0.50	0.079	ug/L	1
1,1-Dichloroethene	75-35-4	8260B	0.83		0.50	0.094	ug/L	1
cis-1,2-Dichloroethene	156-59-2	8260B	11		0.50	0.087	ug/L	1
1,2-Dichloropropane	78-87-5	8260B	ND		0.50	0.081	ug/L	1
trans-1,3-Dichloropropene	10061-02-6	8260B	ND		0.50	0.18	ug/L	1
cis-1,3-Dichloropropene	10061-01-5	8260B	ND		0.50	0.090	ug/L	1
Ethylbenzene	100-41-4	8260B	ND		0.50	0.17	ug/L	1
2-Hexanone	591-78-6	8260B	ND		10	0.27	ug/L	1
Isopropylbenzene	98-82-8	8260B	ND		0.50	0.029	ug/L	1
Methyl acetate	79-20-9	8260B	ND		1.0	0.30	ug/L	1
Methyl tertiary butyl ether (MTBE)	1634-04-4	8260B	ND		0.50	0.019	ug/L	1
4-Methyl-2-pentanone	108-10-1	8260B	ND		10	0.31	ug/L	1
Methylcyclohexane	108-87-2	8260B	ND		5.0	0.95	ug/L	1
Methylene chloride	75-09-2	8260B	ND		0.50	0.17	ug/L	1
Styrene	100-42-5	8260B	ND		0.50	0.015	ug/L	1
1,1,2,2-Tetrachloroethane	79-34-5	8260B	ND		0.50	0.013	ug/L	1
Tetrachloroethene	127-18-4	8260B	ND		0.50	0.014	ug/L	1
Toluene	108-88-3	8260B	0.18	J	0.50	0.17	ug/L	1
1,1,2-Trichloro-1,2,2-Trifluoroethane	76-13-1	8260B	ND		0.50	0.30	ug/L	1
1,2,4-Trichlorobenzene	120-82-1	8260B	ND		0.50	0.17	ug/L	1
1,1,1-Trichloroethane	71-55-6	8260B	ND		0.50	0.029	ug/L	1
1,1,2-Trichloroethane	79-00-5	8260B	ND		0.50	0.031	ug/L	1

PQL = Practical quantitation limit
B = Detected in the method blank
E = Quantitation of compound exceeded the calibration range
ND = Not detected at or above the MDL
J = Estimated result < PQL and ≥ MDL
P = The RPD between two GC columns exceeds 40%
Where applicable, all soil sample analysis are reported on a dry weight basis unless flagged with a "W"
N = Recovery is out of criteria
H = Out of holding time

Volatile Organic Compounds by GC/MS

Client: ARCADIS U.S., Inc.
Laboratory ID: LD01022-004
Description: F39TW02 (30-35)
Matrix: Aqueous
Date Sampled: 03/30/2010 1355
Date Received: 04/01/2010

Run	Prep Method	Analytical Method	Dilution	Analysis Date	Analyst	Prep Date	Batch
1	5030B	8260B	1	04/03/2010 0417	LBS		30897

Parameter	CAS Number	Analytical Method	Result	Q	PQL	MDL	Units	Run
Trichloroethene	79-01-6	8260B	12		0.50	0.024	ug/L	1
Trichlorofluoromethane	75-69-4	8260B	ND		0.50	0.051	ug/L	1
Vinyl chloride	75-01-4	8260B	ND		0.50	0.065	ug/L	1
Xylenes (total)	1330-20-7	8260B	ND		0.50	0.17	ug/L	1

Surrogate	Q	Run 1 % Recovery	Acceptance Limits
1,2-Dichloroethane-d4		109	70-130
Bromofluorobenzene		99	70-130
Toluene-d8		107	70-130

PQL = Practical quantitation limit
B = Detected in the method blank
E = Quantitation of compound exceeded the calibration range
ND = Not detected at or above the MDL
J = Estimated result < PQL and ≥ MDL
P = The RPD between two GC columns exceeds 40%
Where applicable, all soil sample analysis are reported on a dry weight basis unless flagged with a "W"
N = Recovery is out of criteria
H = Out of holding time

Semivolatile Organic Compounds by GC/MS

Client: ARCADIS U.S., Inc.
Laboratory ID: LD01022-004
Description: F39TW02 (30-35)
Matrix: Aqueous
Date Sampled: 03/30/2010 1355
Date Received: 04/01/2010

Run	Prep Method	Analytical Method	Dilution	Analysis Date	Analyst	Prep Date	Batch
1	3520C	8270D	1	04/06/2010 1500	WD	04/02/2010 2357	30843

Parameter	CAS Number	Analytical Method	Result	Q	PQL	MDL	Units	Run
Acenaphthene	83-32-9	8270D	ND		1.0	0.092	ug/L	1
Acenaphthylene	208-96-8	8270D	ND		1.0	0.16	ug/L	1
Acetophenone	98-86-2	8270D	ND		1.0	0.33	ug/L	1
Anthracene	120-12-7	8270D	ND		1.0	0.13	ug/L	1
Atrazine	1912-24-9	8270D	ND		1.0	0.20	ug/L	1
Benzaldehyde	100-52-7	8270D	ND		5.1	1.0	ug/L	1
Benzo(a)anthracene	56-55-3	8270D	ND		1.0	0.15	ug/L	1
Benzo(a)pyrene	50-32-8	8270D	ND		1.0	0.16	ug/L	1
Benzo(b)fluoranthene	205-99-2	8270D	ND		1.0	0.20	ug/L	1
Benzo(g,h,i)perylene	191-24-2	8270D	ND		1.0	0.23	ug/L	1
Benzo(k)fluoranthene	207-08-9	8270D	ND		1.0	0.12	ug/L	1
1,1'-Biphenyl	92-52-4	8270D	ND		1.0	0.20	ug/L	1
4-Bromophenyl phenyl ether	101-55-3	8270D	ND		1.0	0.12	ug/L	1
Butyl benzyl phthalate	85-68-7	8270D	ND		5.1	1.7	ug/L	1
Caprolactam	105-60-2	8270D	ND		5.1	1.2	ug/L	1
Carbazole	86-74-8	8270D	ND		1.0	0.26	ug/L	1
4-Chloro-3-methyl phenol	59-50-7	8270D	ND		1.0	0.22	ug/L	1
4-Chloroaniline	106-47-8	8270D	ND		1.0	0.13	ug/L	1
bis(2-Chloroethoxy)methane	111-91-1	8270D	ND		1.0	0.13	ug/L	1
bis(2-Chloroethyl)ether	111-44-4	8270D	ND		1.0	0.13	ug/L	1
bis(2-Chloroisopropyl)ether	108-60-1	8270D	ND		1.0	0.082	ug/L	1
2-Chloronaphthalene	91-58-7	8270D	ND		1.0	0.12	ug/L	1
2-Chlorophenol	95-57-8	8270D	ND		1.0	0.13	ug/L	1
4-Chlorophenyl phenyl ether	7005-72-3	8270D	ND		1.0	0.11	ug/L	1
Chrysene	218-01-9	8270D	ND		1.0	0.12	ug/L	1
Dibenzo(a,h)anthracene	53-70-3	8270D	ND		1.0	0.13	ug/L	1
Dibenzofuran	132-64-9	8270D	ND		1.0	0.16	ug/L	1
3,3'-Dichlorobenzidine	91-94-1	8270D	ND		5.1	0.83	ug/L	1
2,4-Dichlorophenol	120-83-2	8270D	ND		1.0	0.15	ug/L	1
Diethylphthalate	84-66-2	8270D	ND		5.1	1.7	ug/L	1
Dimethyl phthalate	131-11-3	8270D	ND		5.1	1.7	ug/L	1
2,4-Dimethylphenol	105-67-9	8270D	ND		1.0	0.32	ug/L	1
Di-n-butyl phthalate	84-74-2	8270D	ND		5.1	1.7	ug/L	1
4,6-Dinitro-2-methylphenol	534-52-1	8270D	ND		5.1	1.5	ug/L	1
2,4-Dinitrophenol	51-28-5	8270D	ND		5.1	0.26	ug/L	1
2,4-Dinitrotoluene	121-14-2	8270D	ND		2.0	0.46	ug/L	1
2,6-Dinitrotoluene	606-20-2	8270D	ND		2.0	0.41	ug/L	1
Di-n-octylphthalate	117-84-0	8270D	ND		5.1	1.7	ug/L	1
bis(2-Ethylhexyl)phthalate	117-81-7	8270D	ND		5.1	1.7	ug/L	1
Fluoranthene	206-44-0	8270D	ND		1.0	0.21	ug/L	1
Fluorene	86-73-7	8270D	ND		1.0	0.10	ug/L	1
Hexachlorobenzene	118-74-1	8270D	ND		1.0	0.21	ug/L	1
Hexachlorobutadiene	87-68-3	8270D	ND		1.0	0.092	ug/L	1
Hexachlorocyclopentadiene	77-47-4	8270D	ND		5.1	0.23	ug/L	1

PQL = Practical quantitation limit
B = Detected in the method blank
E = Quantitation of compound exceeded the calibration range
ND = Not detected at or above the MDL
J = Estimated result < PQL and ≥ MDL
P = The RPD between two GC columns exceeds 40%
Where applicable, all soil sample analysis are reported on a dry weight basis unless flagged with a "W"
N = Recovery is out of criteria
H = Out of holding time

Semivolatile Organic Compounds by GC/MS

Client: ARCADIS U.S., Inc.
Laboratory ID: LD01022-004
Description: F39TW02 (30-35)
Matrix: Aqueous
Date Sampled: 03/30/2010 1355
Date Received: 04/01/2010

Run	Prep Method	Analytical Method	Dilution	Analysis Date	Analyst	Prep Date	Batch
1	3520C	8270D	1	04/06/2010 1500	WD	04/02/2010 2357	30843

Parameter	CAS Number	Analytical Method	Result	Q	PQL	MDL	Units	Run
Hexachloroethane	67-72-1	8270D	ND		1.0	0.11	ug/L	1
Indeno(1,2,3-c,d)pyrene	193-39-5	8270D	ND		1.0	0.23	ug/L	1
Isophorone	78-59-1	8270D	ND		1.0	0.082	ug/L	1
2-Methylnaphthalene	91-57-6	8270D	ND		1.0	0.082	ug/L	1
2-Methylphenol	95-48-7	8270D	ND		1.0	0.17	ug/L	1
3 & 4-Methylphenol	106-44-5	8270D	ND		2.0	0.58	ug/L	1
Naphthalene	91-20-3	8270D	ND		1.0	0.071	ug/L	1
2-Nitroaniline	88-74-4	8270D	ND		2.0	0.56	ug/L	1
3-Nitroaniline	99-09-2	8270D	ND		2.0	0.79	ug/L	1
4-Nitroaniline	100-01-6	8270D	ND		2.0	0.40	ug/L	1
Nitrobenzene	98-95-3	8270D	ND		1.0	0.10	ug/L	1
2-Nitrophenol	88-75-5	8270D	ND		2.0	0.28	ug/L	1
4-Nitrophenol	100-02-7	8270D	ND		5.1	0.65	ug/L	1
N-Nitrosodi-n-propylamine	621-64-7	8270D	ND		1.0	0.082	ug/L	1
N-Nitrosodiphenylamine (Diphenylamine)	86-30-6	8270D	ND		1.0	0.39	ug/L	1
Pentachlorophenol	87-86-5	8270D	ND		5.1	0.55	ug/L	1
Phenanthrene	85-01-8	8270D	ND		1.0	0.18	ug/L	1
Phenol	108-95-2	8270D	ND		1.0	0.11	ug/L	1
Pyrene	129-00-0	8270D	ND		1.0	0.16	ug/L	1
2,4,5-Trichlorophenol	95-95-4	8270D	ND		1.0	0.18	ug/L	1
2,4,6-Trichlorophenol	88-06-2	8270D	ND		1.0	0.22	ug/L	1

Surrogate	Q	Run 1 % Recovery	Acceptance Limits
2-Fluorobiphenyl		78	37-129
2-Fluorophenol		71	24-127
Nitrobenzene-d5		79	38-127
Phenol-d5		62	28-128
Terphenyl-d14		78	10-148
2,4,6-Tribromophenol		102	41-144

PQL = Practical quantitation limit
B = Detected in the method blank
E = Quantitation of compound exceeded the calibration range
ND = Not detected at or above the MDL
J = Estimated result < PQL and ≥ MDL
P = The RPD between two GC columns exceeds 40%
Where applicable, all soil sample analysis are reported on a dry weight basis unless flagged with a "W"
N = Recovery is out of criteria
H = Out of holding time

Volatile Organic Compounds by GC/MS

Client: ARCADIS U.S., Inc.
Laboratory ID: LD01022-005
Description: F39TW02 (20-25)
Matrix: Aqueous
Date Sampled: 03/30/2010 1408
Date Received: 04/01/2010

Run	Prep Method	Analytical Method	Dilution	Analysis Date	Analyst	Prep Date	Batch
1	5030B	8260B	1	04/03/2010 0439	LBS		30897

Parameter	CAS Number	Analytical Method	Result	Q	PQL	MDL	Units	Run
Acetone	67-64-1	8260B	6.3	J	10	0.061	ug/L	1
Benzene	71-43-2	8260B	ND		0.50	0.027	ug/L	1
Bromodichloromethane	75-27-4	8260B	ND		0.50	0.17	ug/L	1
Bromoform	75-25-2	8260B	ND		0.50	0.010	ug/L	1
Bromomethane (Methyl bromide)	74-83-9	8260B	ND		0.50	0.20	ug/L	1
2-Butanone (MEK)	78-93-3	8260B	ND		10	2.0	ug/L	1
Carbon disulfide	75-15-0	8260B	0.33	J	0.50	0.097	ug/L	1
Carbon tetrachloride	56-23-5	8260B	ND		0.50	0.085	ug/L	1
Chlorobenzene	108-90-7	8260B	ND		0.50	0.17	ug/L	1
Chloroethane	75-00-3	8260B	ND		0.50	0.17	ug/L	1
Chloroform	67-66-3	8260B	ND		0.50	0.17	ug/L	1
Chloromethane (Methyl chloride)	74-87-3	8260B	ND		0.50	0.17	ug/L	1
Cyclohexane	110-82-7	8260B	ND		0.50	0.30	ug/L	1
1,2-Dibromo-3-chloropropane (DBCP)	96-12-8	8260B	ND		0.50	0.069	ug/L	1
Dibromochloromethane	124-48-1	8260B	ND		0.50	0.17	ug/L	1
1,2-Dibromoethane (EDB)	106-93-4	8260B	ND		0.50	0.061	ug/L	1
1,3-Dichlorobenzene	541-73-1	8260B	ND		0.50	0.17	ug/L	1
1,2-Dichlorobenzene	95-50-1	8260B	ND		0.50	0.17	ug/L	1
1,4-Dichlorobenzene	106-46-7	8260B	ND		0.50	0.17	ug/L	1
Dichlorodifluoromethane	75-71-8	8260B	ND		0.50	0.071	ug/L	1
1,1-Dichloroethane	75-34-3	8260B	ND		0.50	0.054	ug/L	1
1,2-Dichloroethane	107-06-2	8260B	ND		0.50	0.023	ug/L	1
trans-1,2-Dichloroethene	156-60-5	8260B	4.6		0.50	0.079	ug/L	1
1,1-Dichloroethene	75-35-4	8260B	0.21	J	0.50	0.094	ug/L	1
cis-1,2-Dichloroethene	156-59-2	8260B	16		0.50	0.087	ug/L	1
1,2-Dichloropropane	78-87-5	8260B	ND		0.50	0.081	ug/L	1
trans-1,3-Dichloropropene	10061-02-6	8260B	ND		0.50	0.18	ug/L	1
cis-1,3-Dichloropropene	10061-01-5	8260B	ND		0.50	0.090	ug/L	1
Ethylbenzene	100-41-4	8260B	ND		0.50	0.17	ug/L	1
2-Hexanone	591-78-6	8260B	ND		10	0.27	ug/L	1
Isopropylbenzene	98-82-8	8260B	ND		0.50	0.029	ug/L	1
Methyl acetate	79-20-9	8260B	ND		1.0	0.30	ug/L	1
Methyl tertiary butyl ether (MTBE)	1634-04-4	8260B	ND		0.50	0.019	ug/L	1
4-Methyl-2-pentanone	108-10-1	8260B	ND		10	0.31	ug/L	1
Methylcyclohexane	108-87-2	8260B	ND		5.0	0.95	ug/L	1
Methylene chloride	75-09-2	8260B	ND		0.50	0.17	ug/L	1
Styrene	100-42-5	8260B	ND		0.50	0.015	ug/L	1
1,1,2,2-Tetrachloroethane	79-34-5	8260B	ND		0.50	0.013	ug/L	1
Tetrachloroethene	127-18-4	8260B	ND		0.50	0.014	ug/L	1
Toluene	108-88-3	8260B	ND		0.50	0.17	ug/L	1
1,1,2-Trichloro-1,2,2-Trifluoroethane	76-13-1	8260B	ND		0.50	0.30	ug/L	1
1,2,4-Trichlorobenzene	120-82-1	8260B	ND		0.50	0.17	ug/L	1
1,1,1-Trichloroethane	71-55-6	8260B	ND		0.50	0.029	ug/L	1
1,1,2-Trichloroethane	79-00-5	8260B	ND		0.50	0.031	ug/L	1

PQL = Practical quantitation limit
B = Detected in the method blank
E = Quantitation of compound exceeded the calibration range
ND = Not detected at or above the MDL
J = Estimated result < PQL and ≥ MDL
P = The RPD between two GC columns exceeds 40%
Where applicable, all soil sample analysis are reported on a dry weight basis unless flagged with a "W"
N = Recovery is out of criteria
H = Out of holding time

Volatile Organic Compounds by GC/MS

Client: ARCADIS U.S., Inc.
Laboratory ID: LD01022-005
Description: F39TW02 (20-25)
Matrix: Aqueous
Date Sampled: 03/30/2010 1408
Date Received: 04/01/2010

Run	Prep Method	Analytical Method	Dilution	Analysis Date	Analyst	Prep Date	Batch
1	5030B	8260B	1	04/03/2010 0439	LBS		30897

Parameter	CAS Number	Analytical Method	Result	Q	PQL	MDL	Units	Run
Trichloroethene	79-01-6	8260B	30		0.50	0.024	ug/L	1
Trichlorofluoromethane	75-69-4	8260B	ND		0.50	0.051	ug/L	1
Vinyl chloride	75-01-4	8260B	ND		0.50	0.065	ug/L	1
Xylenes (total)	1330-20-7	8260B	ND		0.50	0.17	ug/L	1

Surrogate	Q	Run 1 % Recovery	Acceptance Limits
1,2-Dichloroethane-d4		109	70-130
Bromofluorobenzene		98	70-130
Toluene-d8		108	70-130

PQL = Practical quantitation limit
B = Detected in the method blank
E = Quantitation of compound exceeded the calibration range
ND = Not detected at or above the MDL
J = Estimated result < PQL and ≥ MDL
P = The RPD between two GC columns exceeds 40%
Where applicable, all soil sample analysis are reported on a dry weight basis unless flagged with a "W"
N = Recovery is out of criteria
H = Out of holding time

Semivolatile Organic Compounds by GC/MS

Client: ARCADIS U.S., Inc.
Laboratory ID: LD01022-005
Description: F39TW02 (20-25)
Matrix: Aqueous
Date Sampled: 03/30/2010 1408
Date Received: 04/01/2010

Run	Prep Method	Analytical Method	Dilution	Analysis Date	Analyst	Prep Date	Batch
1	3520C	8270D	1	04/06/2010 1521	WD	04/02/2010 2357	30843

Parameter	CAS Number	Analytical Method	Result	Q	PQL	MDL	Units	Run
Acenaphthene	83-32-9	8270D	ND		1.1	0.095	ug/L	1
Acenaphthylene	208-96-8	8270D	ND		1.1	0.17	ug/L	1
Acetophenone	98-86-2	8270D	ND		1.1	0.34	ug/L	1
Anthracene	120-12-7	8270D	ND		1.1	0.14	ug/L	1
Atrazine	1912-24-9	8270D	ND		1.1	0.21	ug/L	1
Benzaldehyde	100-52-7	8270D	ND		5.3	1.1	ug/L	1
Benzo(a)anthracene	56-55-3	8270D	ND		1.1	0.16	ug/L	1
Benzo(a)pyrene	50-32-8	8270D	ND		1.1	0.17	ug/L	1
Benzo(b)fluoranthene	205-99-2	8270D	ND		1.1	0.21	ug/L	1
Benzo(g,h,i)perylene	191-24-2	8270D	ND		1.1	0.24	ug/L	1
Benzo(k)fluoranthene	207-08-9	8270D	ND		1.1	0.13	ug/L	1
1,1'-Biphenyl	92-52-4	8270D	ND		1.1	0.21	ug/L	1
4-Bromophenyl phenyl ether	101-55-3	8270D	ND		1.1	0.13	ug/L	1
Butyl benzyl phthalate	85-68-7	8270D	ND		5.3	1.8	ug/L	1
Caprolactam	105-60-2	8270D	ND		5.3	1.3	ug/L	1
Carbazole	86-74-8	8270D	ND		1.1	0.26	ug/L	1
4-Chloro-3-methyl phenol	59-50-7	8270D	ND		1.1	0.23	ug/L	1
4-Chloroaniline	106-47-8	8270D	ND		1.1	0.14	ug/L	1
bis(2-Chloroethoxy)methane	111-91-1	8270D	ND		1.1	0.14	ug/L	1
bis(2-Chloroethyl)ether	111-44-4	8270D	ND		1.1	0.14	ug/L	1
bis(2-Chloroisopropyl)ether	108-60-1	8270D	ND		1.1	0.084	ug/L	1
2-Chloronaphthalene	91-58-7	8270D	ND		1.1	0.13	ug/L	1
2-Chlorophenol	95-57-8	8270D	ND		1.1	0.14	ug/L	1
4-Chlorophenyl phenyl ether	7005-72-3	8270D	ND		1.1	0.12	ug/L	1
Chrysene	218-01-9	8270D	ND		1.1	0.13	ug/L	1
Dibenzo(a,h)anthracene	53-70-3	8270D	ND		1.1	0.14	ug/L	1
Dibenzofuran	132-64-9	8270D	ND		1.1	0.17	ug/L	1
3,3'-Dichlorobenzidine	91-94-1	8270D	ND		5.3	0.85	ug/L	1
2,4-Dichlorophenol	120-83-2	8270D	ND		1.1	0.16	ug/L	1
Diethylphthalate	84-66-2	8270D	ND		5.3	1.8	ug/L	1
Dimethyl phthalate	131-11-3	8270D	ND		5.3	1.8	ug/L	1
2,4-Dimethylphenol	105-67-9	8270D	ND		1.1	0.33	ug/L	1
Di-n-butyl phthalate	84-74-2	8270D	ND		5.3	1.8	ug/L	1
4,6-Dinitro-2-methylphenol	534-52-1	8270D	ND		5.3	1.6	ug/L	1
2,4-Dinitrophenol	51-28-5	8270D	ND		5.3	0.26	ug/L	1
2,4-Dinitrotoluene	121-14-2	8270D	ND		2.1	0.47	ug/L	1
2,6-Dinitrotoluene	606-20-2	8270D	ND		2.1	0.42	ug/L	1
Di-n-octylphthalate	117-84-0	8270D	ND		5.3	1.8	ug/L	1
bis(2-Ethylhexyl)phthalate	117-81-7	8270D	ND		5.3	1.8	ug/L	1
Fluoranthene	206-44-0	8270D	ND		1.1	0.22	ug/L	1
Fluorene	86-73-7	8270D	ND		1.1	0.11	ug/L	1
Hexachlorobenzene	118-74-1	8270D	ND		1.1	0.22	ug/L	1
Hexachlorobutadiene	87-68-3	8270D	ND		1.1	0.095	ug/L	1
Hexachlorocyclopentadiene	77-47-4	8270D	ND		5.3	0.24	ug/L	1

PQL = Practical quantitation limit
B = Detected in the method blank
E = Quantitation of compound exceeded the calibration range
ND = Not detected at or above the MDL
J = Estimated result < PQL and ≥ MDL
P = The RPD between two GC columns exceeds 40%
Where applicable, all soil sample analysis are reported on a dry weight basis unless flagged with a "W"
N = Recovery is out of criteria
H = Out of holding time

Semivolatile Organic Compounds by GC/MS

Client: ARCADIS U.S., Inc.
Laboratory ID: LD01022-005
Description: F39TW02 (20-25)
Matrix: Aqueous
Date Sampled: 03/30/2010 1408
Date Received: 04/01/2010

Run	Prep Method	Analytical Method	Dilution	Analysis Date	Analyst	Prep Date	Batch
1	3520C	8270D	1	04/06/2010 1521	WD	04/02/2010 2357	30843

Parameter	CAS Number	Analytical Method	Result	Q	PQL	MDL	Units	Run
Hexachloroethane	67-72-1	8270D	ND		1.1	0.12	ug/L	1
Indeno(1,2,3-c,d)pyrene	193-39-5	8270D	ND		1.1	0.24	ug/L	1
Isophorone	78-59-1	8270D	ND		1.1	0.084	ug/L	1
2-Methylnaphthalene	91-57-6	8270D	ND		1.1	0.084	ug/L	1
2-Methylphenol	95-48-7	8270D	ND		1.1	0.18	ug/L	1
3 & 4-Methylphenol	106-44-5	8270D	ND		2.1	0.60	ug/L	1
Naphthalene	91-20-3	8270D	ND		1.1	0.074	ug/L	1
2-Nitroaniline	88-74-4	8270D	ND		2.1	0.58	ug/L	1
3-Nitroaniline	99-09-2	8270D	ND		2.1	0.81	ug/L	1
4-Nitroaniline	100-01-6	8270D	ND		2.1	0.41	ug/L	1
Nitrobenzene	98-95-3	8270D	ND		1.1	0.11	ug/L	1
2-Nitrophenol	88-75-5	8270D	ND		2.1	0.28	ug/L	1
4-Nitrophenol	100-02-7	8270D	ND		5.3	0.67	ug/L	1
N-Nitrosodi-n-propylamine	621-64-7	8270D	ND		1.1	0.084	ug/L	1
N-Nitrosodiphenylamine (Diphenylamine)	86-30-6	8270D	ND		1.1	0.40	ug/L	1
Pentachlorophenol	87-86-5	8270D	ND		5.3	0.57	ug/L	1
Phenanthrene	85-01-8	8270D	ND		1.1	0.19	ug/L	1
Phenol	108-95-2	8270D	ND		1.1	0.12	ug/L	1
Pyrene	129-00-0	8270D	ND		1.1	0.17	ug/L	1
2,4,5-Trichlorophenol	95-95-4	8270D	ND		1.1	0.19	ug/L	1
2,4,6-Trichlorophenol	88-06-2	8270D	ND		1.1	0.23	ug/L	1

Surrogate	Q	Run 1 % Recovery	Acceptance Limits
2-Fluorobiphenyl		82	37-129
2-Fluorophenol		60	24-127
Nitrobenzene-d5		77	38-127
Phenol-d5		56	28-128
Terphenyl-d14		67	10-148
2,4,6-Tribromophenol		114	41-144

PQL = Practical quantitation limit
B = Detected in the method blank
E = Quantitation of compound exceeded the calibration range
ND = Not detected at or above the MDL
J = Estimated result < PQL and ≥ MDL
P = The RPD between two GC columns exceeds 40%
Where applicable, all soil sample analysis are reported on a dry weight basis unless flagged with a "W"
N = Recovery is out of criteria
H = Out of holding time

Volatile Organic Compounds by GC/MS

Client: ARCADIS U.S., Inc.
Laboratory ID: LD01022-006
Description: F39TW01 (30-35)
Matrix: Aqueous
Date Sampled: 03/30/2010 1710
Date Received: 04/01/2010

Run	Prep Method	Analytical Method	Dilution	Analysis Date	Analyst	Prep Date	Batch
1	5030B	8260B	1	04/03/2010 0501	LBS		30897

Parameter	CAS Number	Analytical Method	Result	Q	PQL	MDL	Units	Run
Acetone	67-64-1	8260B	27		10	0.061	ug/L	1
Benzene	71-43-2	8260B	0.17	J	0.50	0.027	ug/L	1
Bromodichloromethane	75-27-4	8260B	ND		0.50	0.17	ug/L	1
Bromoform	75-25-2	8260B	ND		0.50	0.010	ug/L	1
Bromomethane (Methyl bromide)	74-83-9	8260B	ND		0.50	0.20	ug/L	1
2-Butanone (MEK)	78-93-3	8260B	ND		10	2.0	ug/L	1
Carbon disulfide	75-15-0	8260B	0.56		0.50	0.097	ug/L	1
Carbon tetrachloride	56-23-5	8260B	ND		0.50	0.085	ug/L	1
Chlorobenzene	108-90-7	8260B	ND		0.50	0.17	ug/L	1
Chloroethane	75-00-3	8260B	ND		0.50	0.17	ug/L	1
Chloroform	67-66-3	8260B	ND		0.50	0.17	ug/L	1
Chloromethane (Methyl chloride)	74-87-3	8260B	ND		0.50	0.17	ug/L	1
Cyclohexane	110-82-7	8260B	ND		0.50	0.30	ug/L	1
1,2-Dibromo-3-chloropropane (DBCP)	96-12-8	8260B	ND		0.50	0.069	ug/L	1
Dibromochloromethane	124-48-1	8260B	ND		0.50	0.17	ug/L	1
1,2-Dibromoethane (EDB)	106-93-4	8260B	ND		0.50	0.061	ug/L	1
1,3-Dichlorobenzene	541-73-1	8260B	ND		0.50	0.17	ug/L	1
1,2-Dichlorobenzene	95-50-1	8260B	ND		0.50	0.17	ug/L	1
1,4-Dichlorobenzene	106-46-7	8260B	ND		0.50	0.17	ug/L	1
Dichlorodifluoromethane	75-71-8	8260B	ND		0.50	0.071	ug/L	1
1,1-Dichloroethane	75-34-3	8260B	ND		0.50	0.054	ug/L	1
1,2-Dichloroethane	107-06-2	8260B	ND		0.50	0.023	ug/L	1
trans-1,2-Dichloroethene	156-60-5	8260B	ND		0.50	0.079	ug/L	1
1,1-Dichloroethene	75-35-4	8260B	ND		0.50	0.094	ug/L	1
cis-1,2-Dichloroethene	156-59-2	8260B	0.29	J	0.50	0.087	ug/L	1
1,2-Dichloropropane	78-87-5	8260B	ND		0.50	0.081	ug/L	1
trans-1,3-Dichloropropene	10061-02-6	8260B	ND		0.50	0.18	ug/L	1
cis-1,3-Dichloropropene	10061-01-5	8260B	ND		0.50	0.090	ug/L	1
Ethylbenzene	100-41-4	8260B	ND		0.50	0.17	ug/L	1
2-Hexanone	591-78-6	8260B	0.33	J	10	0.27	ug/L	1
Isopropylbenzene	98-82-8	8260B	ND		0.50	0.029	ug/L	1
Methyl acetate	79-20-9	8260B	ND		1.0	0.30	ug/L	1
Methyl tertiary butyl ether (MTBE)	1634-04-4	8260B	ND		0.50	0.019	ug/L	1
4-Methyl-2-pentanone	108-10-1	8260B	ND		10	0.31	ug/L	1
Methylcyclohexane	108-87-2	8260B	ND		5.0	0.95	ug/L	1
Methylene chloride	75-09-2	8260B	ND		0.50	0.17	ug/L	1
Styrene	100-42-5	8260B	ND		0.50	0.015	ug/L	1
1,1,2,2-Tetrachloroethane	79-34-5	8260B	ND		0.50	0.013	ug/L	1
Tetrachloroethene	127-18-4	8260B	ND		0.50	0.014	ug/L	1
Toluene	108-88-3	8260B	0.23	J	0.50	0.17	ug/L	1
1,1,2-Trichloro-1,2,2-Trifluoroethane	76-13-1	8260B	ND		0.50	0.30	ug/L	1
1,2,4-Trichlorobenzene	120-82-1	8260B	ND		0.50	0.17	ug/L	1
1,1,1-Trichloroethane	71-55-6	8260B	ND		0.50	0.029	ug/L	1
1,1,2-Trichloroethane	79-00-5	8260B	ND		0.50	0.031	ug/L	1

PQL = Practical quantitation limit
B = Detected in the method blank
E = Quantitation of compound exceeded the calibration range
ND = Not detected at or above the MDL
J = Estimated result < PQL and ≥ MDL
P = The RPD between two GC columns exceeds 40%
Where applicable, all soil sample analysis are reported on a dry weight basis unless flagged with a "W"
N = Recovery is out of criteria
H = Out of holding time

Volatile Organic Compounds by GC/MS

Client: ARCADIS U.S., Inc.
Laboratory ID: LD01022-006
Description: F39TW01 (30-35)
Matrix: Aqueous
Date Sampled: 03/30/2010 1710
Date Received: 04/01/2010

Run	Prep Method	Analytical Method	Dilution	Analysis Date	Analyst	Prep Date	Batch
1	5030B	8260B	1	04/03/2010 0501	LBS		30897

Parameter	CAS Number	Analytical Method	Result	Q	PQL	MDL	Units	Run
Trichloroethene	79-01-6	8260B	0.20	J	0.50	0.024	ug/L	1
Trichlorofluoromethane	75-69-4	8260B	ND		0.50	0.051	ug/L	1
Vinyl chloride	75-01-4	8260B	ND		0.50	0.065	ug/L	1
Xylenes (total)	1330-20-7	8260B	ND		0.50	0.17	ug/L	1

Surrogate	Q	Run 1 % Recovery	Acceptance Limits
1,2-Dichloroethane-d4		109	70-130
Bromofluorobenzene		99	70-130
Toluene-d8		107	70-130

PQL = Practical quantitation limit
B = Detected in the method blank
E = Quantitation of compound exceeded the calibration range
ND = Not detected at or above the MDL
J = Estimated result < PQL and ≥ MDL
P = The RPD between two GC columns exceeds 40%
Where applicable, all soil sample analysis are reported on a dry weight basis unless flagged with a "W"
N = Recovery is out of criteria
H = Out of holding time

Semivolatile Organic Compounds by GC/MS

Client: ARCADIS U.S., Inc.
Laboratory ID: LD01022-006
Description: F39TW01 (30-35)
Matrix: Aqueous
Date Sampled: 03/30/2010 1710
Date Received: 04/01/2010

Run	Prep Method	Analytical Method	Dilution	Analysis Date	Analyst	Prep Date	Batch
1	3520C	8270D	1	04/06/2010 1541	WD	04/02/2010 2357	30843

Parameter	CAS Number	Analytical Method	Result	Q	PQL	MDL	Units	Run
Acenaphthene	83-32-9	8270D	ND		1.1	0.096	ug/L	1
Acenaphthylene	208-96-8	8270D	ND		1.1	0.17	ug/L	1
Acetophenone	98-86-2	8270D	ND		1.1	0.34	ug/L	1
Anthracene	120-12-7	8270D	ND		1.1	0.14	ug/L	1
Atrazine	1912-24-9	8270D	ND		1.1	0.21	ug/L	1
Benzaldehyde	100-52-7	8270D	ND		5.3	1.1	ug/L	1
Benzo(a)anthracene	56-55-3	8270D	ND		1.1	0.16	ug/L	1
Benzo(a)pyrene	50-32-8	8270D	ND		1.1	0.17	ug/L	1
Benzo(b)fluoranthene	205-99-2	8270D	ND		1.1	0.21	ug/L	1
Benzo(g,h,i)perylene	191-24-2	8270D	ND		1.1	0.24	ug/L	1
Benzo(k)fluoranthene	207-08-9	8270D	ND		1.1	0.13	ug/L	1
1,1'-Biphenyl	92-52-4	8270D	ND		1.1	0.21	ug/L	1
4-Bromophenyl phenyl ether	101-55-3	8270D	ND		1.1	0.13	ug/L	1
Butyl benzyl phthalate	85-68-7	8270D	2.2	J	5.3	1.8	ug/L	1
Caprolactam	105-60-2	8270D	ND		5.3	1.3	ug/L	1
Carbazole	86-74-8	8270D	ND		1.1	0.27	ug/L	1
4-Chloro-3-methyl phenol	59-50-7	8270D	ND		1.1	0.23	ug/L	1
4-Chloroaniline	106-47-8	8270D	ND		1.1	0.14	ug/L	1
bis(2-Chloroethoxy)methane	111-91-1	8270D	ND		1.1	0.14	ug/L	1
bis(2-Chloroethyl)ether	111-44-4	8270D	ND		1.1	0.14	ug/L	1
bis(2-Chloroisopropyl)ether	108-60-1	8270D	ND		1.1	0.085	ug/L	1
2-Chloronaphthalene	91-58-7	8270D	ND		1.1	0.13	ug/L	1
2-Chlorophenol	95-57-8	8270D	ND		1.1	0.14	ug/L	1
4-Chlorophenyl phenyl ether	7005-72-3	8270D	ND		1.1	0.12	ug/L	1
Chrysene	218-01-9	8270D	ND		1.1	0.13	ug/L	1
Dibenzo(a,h)anthracene	53-70-3	8270D	ND		1.1	0.14	ug/L	1
Dibenzofuran	132-64-9	8270D	ND		1.1	0.17	ug/L	1
3,3'-Dichlorobenzidine	91-94-1	8270D	ND		5.3	0.86	ug/L	1
2,4-Dichlorophenol	120-83-2	8270D	ND		1.1	0.16	ug/L	1
Diethylphthalate	84-66-2	8270D	2.3	J	5.3	1.8	ug/L	1
Dimethyl phthalate	131-11-3	8270D	ND		5.3	1.8	ug/L	1
2,4-Dimethylphenol	105-67-9	8270D	ND		1.1	0.33	ug/L	1
Di-n-butyl phthalate	84-74-2	8270D	ND		5.3	1.8	ug/L	1
4,6-Dinitro-2-methylphenol	534-52-1	8270D	ND		5.3	1.6	ug/L	1
2,4-Dinitrophenol	51-28-5	8270D	ND		5.3	0.27	ug/L	1
2,4-Dinitrotoluene	121-14-2	8270D	ND		2.1	0.48	ug/L	1
2,6-Dinitrotoluene	606-20-2	8270D	ND		2.1	0.43	ug/L	1
Di-n-octylphthalate	117-84-0	8270D	ND		5.3	1.8	ug/L	1
bis(2-Ethylhexyl)phthalate	117-81-7	8270D	ND		5.3	1.8	ug/L	1
Fluoranthene	206-44-0	8270D	ND		1.1	0.22	ug/L	1
Fluorene	86-73-7	8270D	ND		1.1	0.11	ug/L	1
Hexachlorobenzene	118-74-1	8270D	ND		1.1	0.22	ug/L	1
Hexachlorobutadiene	87-68-3	8270D	ND		1.1	0.096	ug/L	1
Hexachlorocyclopentadiene	77-47-4	8270D	ND		5.3	0.24	ug/L	1

PQL = Practical quantitation limit
B = Detected in the method blank
E = Quantitation of compound exceeded the calibration range
ND = Not detected at or above the MDL
J = Estimated result < PQL and ≥ MDL
P = The RPD between two GC columns exceeds 40%
Where applicable, all soil sample analysis are reported on a dry weight basis unless flagged with a "W"
N = Recovery is out of criteria
H = Out of holding time

Semivolatile Organic Compounds by GC/MS

Client: ARCADIS U.S., Inc.
Laboratory ID: LD01022-006
Description: F39TW01 (30-35)
Matrix: Aqueous
Date Sampled: 03/30/2010 1710
Date Received: 04/01/2010

Run	Prep Method	Analytical Method	Dilution	Analysis Date	Analyst	Prep Date	Batch
1	3520C	8270D	1	04/06/2010 1541	WD	04/02/2010 2357	30843

Parameter	CAS Number	Analytical Method	Result	Q	PQL	MDL	Units	Run
Hexachloroethane	67-72-1	8270D	ND		1.1	0.12	ug/L	1
Indeno(1,2,3-c,d)pyrene	193-39-5	8270D	ND		1.1	0.24	ug/L	1
Isophorone	78-59-1	8270D	ND		1.1	0.085	ug/L	1
2-Methylnaphthalene	91-57-6	8270D	ND		1.1	0.085	ug/L	1
2-Methylphenol	95-48-7	8270D	ND		1.1	0.18	ug/L	1
3 & 4-Methylphenol	106-44-5	8270D	ND		2.1	0.61	ug/L	1
Naphthalene	91-20-3	8270D	ND		1.1	0.074	ug/L	1
2-Nitroaniline	88-74-4	8270D	ND		2.1	0.59	ug/L	1
3-Nitroaniline	99-09-2	8270D	ND		2.1	0.82	ug/L	1
4-Nitroaniline	100-01-6	8270D	ND		2.1	0.41	ug/L	1
Nitrobenzene	98-95-3	8270D	ND		1.1	0.11	ug/L	1
2-Nitrophenol	88-75-5	8270D	ND		2.1	0.29	ug/L	1
4-Nitrophenol	100-02-7	8270D	ND		5.3	0.68	ug/L	1
N-Nitrosodi-n-propylamine	621-64-7	8270D	ND		1.1	0.085	ug/L	1
N-Nitrosodiphenylamine (Diphenylamine)	86-30-6	8270D	ND		1.1	0.40	ug/L	1
Pentachlorophenol	87-86-5	8270D	ND		5.3	0.57	ug/L	1
Phenanthrene	85-01-8	8270D	ND		1.1	0.19	ug/L	1
Phenol	108-95-2	8270D	ND		1.1	0.12	ug/L	1
Pyrene	129-00-0	8270D	ND		1.1	0.17	ug/L	1
2,4,5-Trichlorophenol	95-95-4	8270D	ND		1.1	0.19	ug/L	1
2,4,6-Trichlorophenol	88-06-2	8270D	ND		1.1	0.23	ug/L	1

Surrogate	Q	Run 1 % Recovery	Acceptance Limits
2-Fluorobiphenyl		45	37-129
2-Fluorophenol		31	24-127
Nitrobenzene-d5		44	38-127
Phenol-d5		29	28-128
Terphenyl-d14		12	10-148
2,4,6-Tribromophenol		74	41-144

PQL = Practical quantitation limit
B = Detected in the method blank
E = Quantitation of compound exceeded the calibration range
ND = Not detected at or above the MDL
J = Estimated result < PQL and ≥ MDL
P = The RPD between two GC columns exceeds 40%
Where applicable, all soil sample analysis are reported on a dry weight basis unless flagged with a "W"
N = Recovery is out of criteria
H = Out of holding time

Volatile Organic Compounds by GC/MS

Client: ARCADIS U.S., Inc.
Laboratory ID: LD01022-007
Description: F39TW01 (20-25)
Matrix: Aqueous
Date Sampled: 03/30/2010 1730
Date Received: 04/01/2010

Run	Prep Method	Analytical Method	Dilution	Analysis Date	Analyst	Prep Date	Batch
1	5030B	8260B	1	04/03/2010 0421	RRH		30893

Parameter	CAS Number	Analytical Method	Result	Q	PQL	MDL	Units	Run
Acetone	67-64-1	8260B	2.9	J	10	0.061	ug/L	1
Benzene	71-43-2	8260B	0.53		0.50	0.027	ug/L	1
Bromodichloromethane	75-27-4	8260B	ND		0.50	0.17	ug/L	1
Bromoform	75-25-2	8260B	ND		0.50	0.010	ug/L	1
Bromomethane (Methyl bromide)	74-83-9	8260B	ND		0.50	0.20	ug/L	1
2-Butanone (MEK)	78-93-3	8260B	ND		10	2.0	ug/L	1
Carbon disulfide	75-15-0	8260B	0.23	J	0.50	0.097	ug/L	1
Carbon tetrachloride	56-23-5	8260B	ND		0.50	0.085	ug/L	1
Chlorobenzene	108-90-7	8260B	ND		0.50	0.17	ug/L	1
Chloroethane	75-00-3	8260B	ND		0.50	0.17	ug/L	1
Chloroform	67-66-3	8260B	ND		0.50	0.17	ug/L	1
Chloromethane (Methyl chloride)	74-87-3	8260B	ND		0.50	0.17	ug/L	1
Cyclohexane	110-82-7	8260B	ND		0.50	0.30	ug/L	1
1,2-Dibromo-3-chloropropane (DBCP)	96-12-8	8260B	ND		0.50	0.069	ug/L	1
Dibromochloromethane	124-48-1	8260B	ND		0.50	0.17	ug/L	1
1,2-Dibromoethane (EDB)	106-93-4	8260B	ND		0.50	0.061	ug/L	1
1,3-Dichlorobenzene	541-73-1	8260B	ND		0.50	0.17	ug/L	1
1,2-Dichlorobenzene	95-50-1	8260B	ND		0.50	0.17	ug/L	1
1,4-Dichlorobenzene	106-46-7	8260B	ND		0.50	0.17	ug/L	1
Dichlorodifluoromethane	75-71-8	8260B	ND		0.50	0.071	ug/L	1
1,1-Dichloroethane	75-34-3	8260B	ND		0.50	0.054	ug/L	1
1,2-Dichloroethane	107-06-2	8260B	ND		0.50	0.023	ug/L	1
trans-1,2-Dichloroethene	156-60-5	8260B	0.33	J	0.50	0.079	ug/L	1
1,1-Dichloroethene	75-35-4	8260B	0.10	J	0.50	0.094	ug/L	1
cis-1,2-Dichloroethene	156-59-2	8260B	4.4		0.50	0.087	ug/L	1
1,2-Dichloropropane	78-87-5	8260B	ND		0.50	0.081	ug/L	1
trans-1,3-Dichloropropene	10061-02-6	8260B	ND		0.50	0.18	ug/L	1
cis-1,3-Dichloropropene	10061-01-5	8260B	ND		0.50	0.090	ug/L	1
Ethylbenzene	100-41-4	8260B	ND		0.50	0.17	ug/L	1
2-Hexanone	591-78-6	8260B	ND		10	0.27	ug/L	1
Isopropylbenzene	98-82-8	8260B	ND		0.50	0.029	ug/L	1
Methyl acetate	79-20-9	8260B	ND		1.0	0.30	ug/L	1
Methyl tertiary butyl ether (MTBE)	1634-04-4	8260B	ND		0.50	0.019	ug/L	1
4-Methyl-2-pentanone	108-10-1	8260B	ND		10	0.31	ug/L	1
Methylcyclohexane	108-87-2	8260B	ND		5.0	0.95	ug/L	1
Methylene chloride	75-09-2	8260B	ND		0.50	0.17	ug/L	1
Styrene	100-42-5	8260B	ND		0.50	0.015	ug/L	1
1,1,2,2-Tetrachloroethane	79-34-5	8260B	ND		0.50	0.013	ug/L	1
Tetrachloroethene	127-18-4	8260B	40		0.50	0.014	ug/L	1
Toluene	108-88-3	8260B	ND		0.50	0.17	ug/L	1
1,1,2-Trichloro-1,2,2-Trifluoroethane	76-13-1	8260B	ND		0.50	0.30	ug/L	1
1,2,4-Trichlorobenzene	120-82-1	8260B	ND		0.50	0.17	ug/L	1
1,1,1-Trichloroethane	71-55-6	8260B	ND		0.50	0.029	ug/L	1
1,1,2-Trichloroethane	79-00-5	8260B	ND		0.50	0.031	ug/L	1

PQL = Practical quantitation limit
B = Detected in the method blank
E = Quantitation of compound exceeded the calibration range
ND = Not detected at or above the MDL
J = Estimated result < PQL and ≥ MDL
P = The RPD between two GC columns exceeds 40%
Where applicable, all soil sample analysis are reported on a dry weight basis unless flagged with a "W"
N = Recovery is out of criteria
H = Out of holding time

Volatile Organic Compounds by GC/MS

Client: ARCADIS U.S., Inc.
Laboratory ID: LD01022-007
Description: F39TW01 (20-25)
Matrix: Aqueous
Date Sampled: 03/30/2010 1730
Date Received: 04/01/2010

Run	Prep Method	Analytical Method	Dilution	Analysis Date	Analyst	Prep Date	Batch
1	5030B	8260B	1	04/03/2010 0421	RRH		30893

Parameter	CAS Number	Analytical Method	Result	Q	PQL	MDL	Units	Run
Trichloroethene	79-01-6	8260B	40		0.50	0.024	ug/L	1
Trichlorofluoromethane	75-69-4	8260B	ND		0.50	0.051	ug/L	1
Vinyl chloride	75-01-4	8260B	ND		0.50	0.065	ug/L	1
Xylenes (total)	1330-20-7	8260B	ND		0.50	0.17	ug/L	1

Surrogate	Q	Run 1 % Recovery	Acceptance Limits
1,2-Dichloroethane-d4		93	70-130
Bromofluorobenzene		94	70-130
Toluene-d8		99	70-130

PQL = Practical quantitation limit
B = Detected in the method blank
E = Quantitation of compound exceeded the calibration range
ND = Not detected at or above the MDL
J = Estimated result < PQL and ≥ MDL
P = The RPD between two GC columns exceeds 40%
Where applicable, all soil sample analysis are reported on a dry weight basis unless flagged with a "W"
N = Recovery is out of criteria
H = Out of holding time

Semivolatile Organic Compounds by GC/MS

Client: ARCADIS U.S., Inc.
Laboratory ID: LD01022-007
Description: F39TW01 (20-25)
Matrix: Aqueous
Date Sampled: 03/30/2010 1730
Date Received: 04/01/2010

Run	Prep Method	Analytical Method	Dilution	Analysis Date	Analyst	Prep Date	Batch
1	3520C	8270D	1	04/06/2010 1601	WD	04/02/2010 2357	30843

Parameter	CAS Number	Analytical Method	Result	Q	PQL	MDL	Units	Run
Acenaphthene	83-32-9	8270D	ND		1.1	0.097	ug/L	1
Acenaphthylene	208-96-8	8270D	ND		1.1	0.17	ug/L	1
Acetophenone	98-86-2	8270D	ND		1.1	0.34	ug/L	1
Anthracene	120-12-7	8270D	ND		1.1	0.14	ug/L	1
Atrazine	1912-24-9	8270D	ND		1.1	0.22	ug/L	1
Benzaldehyde	100-52-7	8270D	ND		5.4	1.1	ug/L	1
Benzo(a)anthracene	56-55-3	8270D	ND		1.1	0.16	ug/L	1
Benzo(a)pyrene	50-32-8	8270D	ND		1.1	0.17	ug/L	1
Benzo(b)fluoranthene	205-99-2	8270D	ND		1.1	0.22	ug/L	1
Benzo(g,h,i)perylene	191-24-2	8270D	ND		1.1	0.25	ug/L	1
Benzo(k)fluoranthene	207-08-9	8270D	ND		1.1	0.13	ug/L	1
1,1'-Biphenyl	92-52-4	8270D	ND		1.1	0.22	ug/L	1
4-Bromophenyl phenyl ether	101-55-3	8270D	ND		1.1	0.13	ug/L	1
Butyl benzyl phthalate	85-68-7	8270D	ND		5.4	1.8	ug/L	1
Caprolactam	105-60-2	8270D	ND		5.4	1.3	ug/L	1
Carbazole	86-74-8	8270D	ND		1.1	0.27	ug/L	1
4-Chloro-3-methyl phenol	59-50-7	8270D	ND		1.1	0.24	ug/L	1
4-Chloroaniline	106-47-8	8270D	ND		1.1	0.14	ug/L	1
bis(2-Chloroethoxy)methane	111-91-1	8270D	ND		1.1	0.14	ug/L	1
bis(2-Chloroethyl)ether	111-44-4	8270D	ND		1.1	0.14	ug/L	1
bis(2-Chloroisopropyl)ether	108-60-1	8270D	ND		1.1	0.086	ug/L	1
2-Chloronaphthalene	91-58-7	8270D	ND		1.1	0.13	ug/L	1
2-Chlorophenol	95-57-8	8270D	ND		1.1	0.14	ug/L	1
4-Chlorophenyl phenyl ether	7005-72-3	8270D	ND		1.1	0.12	ug/L	1
Chrysene	218-01-9	8270D	ND		1.1	0.13	ug/L	1
Dibenzo(a,h)anthracene	53-70-3	8270D	ND		1.1	0.14	ug/L	1
Dibenzofuran	132-64-9	8270D	ND		1.1	0.17	ug/L	1
3,3'-Dichlorobenzidine	91-94-1	8270D	ND		5.4	0.87	ug/L	1
2,4-Dichlorophenol	120-83-2	8270D	ND		1.1	0.16	ug/L	1
Diethylphthalate	84-66-2	8270D	ND		5.4	1.8	ug/L	1
Dimethyl phthalate	131-11-3	8270D	ND		5.4	1.8	ug/L	1
2,4-Dimethylphenol	105-67-9	8270D	ND		1.1	0.33	ug/L	1
Di-n-butyl phthalate	84-74-2	8270D	ND		5.4	1.8	ug/L	1
4,6-Dinitro-2-methylphenol	534-52-1	8270D	ND		5.4	1.6	ug/L	1
2,4-Dinitrophenol	51-28-5	8270D	ND		5.4	0.27	ug/L	1
2,4-Dinitrotoluene	121-14-2	8270D	ND		2.2	0.48	ug/L	1
2,6-Dinitrotoluene	606-20-2	8270D	ND		2.2	0.43	ug/L	1
Di-n-octylphthalate	117-84-0	8270D	ND		5.4	1.8	ug/L	1
bis(2-Ethylhexyl)phthalate	117-81-7	8270D	ND		5.4	1.8	ug/L	1
Fluoranthene	206-44-0	8270D	ND		1.1	0.23	ug/L	1
Fluorene	86-73-7	8270D	ND		1.1	0.11	ug/L	1
Hexachlorobenzene	118-74-1	8270D	ND		1.1	0.23	ug/L	1
Hexachlorobutadiene	87-68-3	8270D	ND		1.1	0.097	ug/L	1
Hexachlorocyclopentadiene	77-47-4	8270D	ND		5.4	0.25	ug/L	1

PQL = Practical quantitation limit
B = Detected in the method blank
E = Quantitation of compound exceeded the calibration range
ND = Not detected at or above the MDL
J = Estimated result < PQL and ≥ MDL
P = The RPD between two GC columns exceeds 40%
Where applicable, all soil sample analysis are reported on a dry weight basis unless flagged with a "W"
N = Recovery is out of criteria
H = Out of holding time

Semivolatile Organic Compounds by GC/MS

Client: ARCADIS U.S., Inc.
Laboratory ID: LD01022-007
Description: F39TW01 (20-25)
Matrix: Aqueous
Date Sampled: 03/30/2010 1730
Date Received: 04/01/2010

Run	Prep Method	Analytical Method	Dilution	Analysis Date	Analyst	Prep Date	Batch
1	3520C	8270D	1	04/06/2010 1601	WD	04/02/2010 2357	30843

Parameter	CAS Number	Analytical Method	Result	Q	PQL	MDL	Units	Run
Hexachloroethane	67-72-1	8270D	ND		1.1	0.12	ug/L	1
Indeno(1,2,3-c,d)pyrene	193-39-5	8270D	ND		1.1	0.25	ug/L	1
Isophorone	78-59-1	8270D	ND		1.1	0.086	ug/L	1
2-Methylnaphthalene	91-57-6	8270D	ND		1.1	0.086	ug/L	1
2-Methylphenol	95-48-7	8270D	ND		1.1	0.18	ug/L	1
3 & 4-Methylphenol	106-44-5	8270D	ND		2.2	0.61	ug/L	1
Naphthalene	91-20-3	8270D	ND		1.1	0.075	ug/L	1
2-Nitroaniline	88-74-4	8270D	ND		2.2	0.59	ug/L	1
3-Nitroaniline	99-09-2	8270D	ND		2.2	0.83	ug/L	1
4-Nitroaniline	100-01-6	8270D	ND		2.2	0.42	ug/L	1
Nitrobenzene	98-95-3	8270D	ND		1.1	0.11	ug/L	1
2-Nitrophenol	88-75-5	8270D	ND		2.2	0.29	ug/L	1
4-Nitrophenol	100-02-7	8270D	ND		5.4	0.69	ug/L	1
N-Nitrosodi-n-propylamine	621-64-7	8270D	ND		1.1	0.086	ug/L	1
N-Nitrosodiphenylamine (Diphenylamine)	86-30-6	8270D	ND		1.1	0.41	ug/L	1
Pentachlorophenol	87-86-5	8270D	ND		5.4	0.58	ug/L	1
Phenanthrene	85-01-8	8270D	ND		1.1	0.19	ug/L	1
Phenol	108-95-2	8270D	ND		1.1	0.12	ug/L	1
Pyrene	129-00-0	8270D	ND		1.1	0.17	ug/L	1
2,4,5-Trichlorophenol	95-95-4	8270D	ND		1.1	0.19	ug/L	1
2,4,6-Trichlorophenol	88-06-2	8270D	ND		1.1	0.24	ug/L	1

Surrogate	Q	Run 1 % Recovery	Acceptance Limits
2-Fluorobiphenyl		75	37-129
2-Fluorophenol		64	24-127
Nitrobenzene-d5		77	38-127
Phenol-d5		59	28-128
Terphenyl-d14		55	10-148
2,4,6-Tribromophenol		103	41-144

PQL = Practical quantitation limit
B = Detected in the method blank
E = Quantitation of compound exceeded the calibration range
ND = Not detected at or above the MDL
J = Estimated result < PQL and ≥ MDL
P = The RPD between two GC columns exceeds 40%
Where applicable, all soil sample analysis are reported on a dry weight basis unless flagged with a "W"
N = Recovery is out of criteria
H = Out of holding time

Volatile Organic Compounds by GC/MS

Client: ARCADIS U.S., Inc.
Laboratory ID: LD01022-008
Description: F39TW01 (10-15)
Matrix: Aqueous
Date Sampled: 03/31/2010 0820
Date Received: 04/01/2010

Run	Prep Method	Analytical Method	Dilution	Analysis Date	Analyst	Prep Date	Batch
1	5030B	8260B	1	04/02/2010 1955	LBS		30899

Parameter	CAS Number	Analytical Method	Result	Q	PQL	MDL	Units	Run
Acetone	67-64-1	8260B	4.6	J	10	0.061	ug/L	1
Benzene	71-43-2	8260B	0.23	J	0.50	0.027	ug/L	1
Bromodichloromethane	75-27-4	8260B	ND		0.50	0.17	ug/L	1
Bromoform	75-25-2	8260B	ND		0.50	0.010	ug/L	1
Bromomethane (Methyl bromide)	74-83-9	8260B	ND		0.50	0.20	ug/L	1
2-Butanone (MEK)	78-93-3	8260B	ND		10	2.0	ug/L	1
Carbon disulfide	75-15-0	8260B	ND		0.50	0.097	ug/L	1
Carbon tetrachloride	56-23-5	8260B	ND		0.50	0.085	ug/L	1
Chlorobenzene	108-90-7	8260B	ND		0.50	0.17	ug/L	1
Chloroethane	75-00-3	8260B	ND		0.50	0.17	ug/L	1
Chloroform	67-66-3	8260B	ND		0.50	0.17	ug/L	1
Chloromethane (Methyl chloride)	74-87-3	8260B	ND		0.50	0.17	ug/L	1
Cyclohexane	110-82-7	8260B	ND		0.50	0.30	ug/L	1
1,2-Dibromo-3-chloropropane (DBCP)	96-12-8	8260B	ND		0.50	0.069	ug/L	1
Dibromochloromethane	124-48-1	8260B	ND		0.50	0.17	ug/L	1
1,2-Dibromoethane (EDB)	106-93-4	8260B	ND		0.50	0.061	ug/L	1
1,3-Dichlorobenzene	541-73-1	8260B	ND		0.50	0.17	ug/L	1
1,2-Dichlorobenzene	95-50-1	8260B	ND		0.50	0.17	ug/L	1
1,4-Dichlorobenzene	106-46-7	8260B	ND		0.50	0.17	ug/L	1
Dichlorodifluoromethane	75-71-8	8260B	ND		0.50	0.071	ug/L	1
1,1-Dichloroethane	75-34-3	8260B	ND		0.50	0.054	ug/L	1
1,2-Dichloroethane	107-06-2	8260B	ND		0.50	0.023	ug/L	1
trans-1,2-Dichloroethene	156-60-5	8260B	1.2		0.50	0.079	ug/L	1
1,1-Dichloroethene	75-35-4	8260B	0.15	J	0.50	0.094	ug/L	1
cis-1,2-Dichloroethene	156-59-2	8260B	6.2		0.50	0.087	ug/L	1
1,2-Dichloropropane	78-87-5	8260B	ND		0.50	0.081	ug/L	1
trans-1,3-Dichloropropene	10061-02-6	8260B	ND		0.50	0.18	ug/L	1
cis-1,3-Dichloropropene	10061-01-5	8260B	ND		0.50	0.090	ug/L	1
Ethylbenzene	100-41-4	8260B	ND		0.50	0.17	ug/L	1
2-Hexanone	591-78-6	8260B	ND		10	0.27	ug/L	1
Isopropylbenzene	98-82-8	8260B	ND		0.50	0.029	ug/L	1
Methyl acetate	79-20-9	8260B	ND		1.0	0.30	ug/L	1
Methyl tertiary butyl ether (MTBE)	1634-04-4	8260B	ND		0.50	0.019	ug/L	1
4-Methyl-2-pentanone	108-10-1	8260B	ND		10	0.31	ug/L	1
Methylcyclohexane	108-87-2	8260B	ND		5.0	0.95	ug/L	1
Methylene chloride	75-09-2	8260B	0.18	BJ	0.50	0.17	ug/L	1
Styrene	100-42-5	8260B	ND		0.50	0.015	ug/L	1
1,1,2,2-Tetrachloroethane	79-34-5	8260B	ND		0.50	0.013	ug/L	1
Tetrachloroethene	127-18-4	8260B	7.1		0.50	0.014	ug/L	1
Toluene	108-88-3	8260B	ND		0.50	0.17	ug/L	1
1,1,2-Trichloro-1,2,2-Trifluoroethane	76-13-1	8260B	ND		0.50	0.30	ug/L	1
1,2,4-Trichlorobenzene	120-82-1	8260B	ND		0.50	0.17	ug/L	1
1,1,1-Trichloroethane	71-55-6	8260B	ND		0.50	0.029	ug/L	1
1,1,2-Trichloroethane	79-00-5	8260B	ND		0.50	0.031	ug/L	1

PQL = Practical quantitation limit
B = Detected in the method blank
E = Quantitation of compound exceeded the calibration range
ND = Not detected at or above the MDL
J = Estimated result < PQL and ≥ MDL
P = The RPD between two GC columns exceeds 40%
Where applicable, all soil sample analysis are reported on a dry weight basis unless flagged with a "W"
N = Recovery is out of criteria
H = Out of holding time

Volatile Organic Compounds by GC/MS

Client: ARCADIS U.S., Inc.
Laboratory ID: LD01022-008
Description: F39TW01 (10-15)
Matrix: Aqueous
Date Sampled: 03/31/2010 0820
Date Received: 04/01/2010

Run	Prep Method	Analytical Method	Dilution	Analysis Date	Analyst	Prep Date	Batch
1	5030B	8260B	1	04/02/2010 1955	LBS		30899

Parameter	CAS Number	Analytical Method	Result	Q	PQL	MDL	Units	Run
Trichloroethene	79-01-6	8260B	43		0.50	0.024	ug/L	1
Trichlorofluoromethane	75-69-4	8260B	ND		0.50	0.051	ug/L	1
Vinyl chloride	75-01-4	8260B	ND		0.50	0.065	ug/L	1
Xylenes (total)	1330-20-7	8260B	ND		0.50	0.17	ug/L	1

Surrogate	Q	Run 1 % Recovery	Acceptance Limits
1,2-Dichloroethane-d4		115	70-130
Bromofluorobenzene		95	70-130
Toluene-d8		108	70-130

PQL = Practical quantitation limit
B = Detected in the method blank
E = Quantitation of compound exceeded the calibration range
ND = Not detected at or above the MDL
J = Estimated result < PQL and ≥ MDL
P = The RPD between two GC columns exceeds 40%
Where applicable, all soil sample analysis are reported on a dry weight basis unless flagged with a "W"
N = Recovery is out of criteria
H = Out of holding time

Semivolatile Organic Compounds by GC/MS

Client: ARCADIS U.S., Inc.
Laboratory ID: LD01022-008
Description: F39TW01 (10-15)
Matrix: Aqueous
Date Sampled: 03/31/2010 0820
Date Received: 04/01/2010

Run	Prep Method	Analytical Method	Dilution	Analysis Date	Analyst	Prep Date	Batch
1	3520C	8270D	1	04/06/2010 1703	WD	04/02/2010 2357	30843

Parameter	CAS Number	Analytical Method	Result	Q	PQL	MDL	Units	Run
Acenaphthene	83-32-9	8270D	ND		1.0	0.094	ug/L	1
Acenaphthylene	208-96-8	8270D	ND		1.0	0.17	ug/L	1
Acetophenone	98-86-2	8270D	ND		1.0	0.33	ug/L	1
Anthracene	120-12-7	8270D	ND		1.0	0.14	ug/L	1
Atrazine	1912-24-9	8270D	ND		1.0	0.21	ug/L	1
Benzaldehyde	100-52-7	8270D	ND		5.2	1.0	ug/L	1
Benzo(a)anthracene	56-55-3	8270D	ND		1.0	0.16	ug/L	1
Benzo(a)pyrene	50-32-8	8270D	ND		1.0	0.17	ug/L	1
Benzo(b)fluoranthene	205-99-2	8270D	ND		1.0	0.21	ug/L	1
Benzo(g,h,i)perylene	191-24-2	8270D	ND		1.0	0.24	ug/L	1
Benzo(k)fluoranthene	207-08-9	8270D	ND		1.0	0.13	ug/L	1
1,1'-Biphenyl	92-52-4	8270D	ND		1.0	0.21	ug/L	1
4-Bromophenyl phenyl ether	101-55-3	8270D	ND		1.0	0.13	ug/L	1
Butyl benzyl phthalate	85-68-7	8270D	ND		5.2	1.8	ug/L	1
Caprolactam	105-60-2	8270D	ND		5.2	1.3	ug/L	1
Carbazole	86-74-8	8270D	ND		1.0	0.26	ug/L	1
4-Chloro-3-methyl phenol	59-50-7	8270D	ND		1.0	0.23	ug/L	1
4-Chloroaniline	106-47-8	8270D	ND		1.0	0.14	ug/L	1
bis(2-Chloroethoxy)methane	111-91-1	8270D	ND		1.0	0.14	ug/L	1
bis(2-Chloroethyl)ether	111-44-4	8270D	ND		1.0	0.14	ug/L	1
bis(2-Chloroisopropyl)ether	108-60-1	8270D	ND		1.0	0.083	ug/L	1
2-Chloronaphthalene	91-58-7	8270D	ND		1.0	0.13	ug/L	1
2-Chlorophenol	95-57-8	8270D	ND		1.0	0.14	ug/L	1
4-Chlorophenyl phenyl ether	7005-72-3	8270D	ND		1.0	0.11	ug/L	1
Chrysene	218-01-9	8270D	ND		1.0	0.13	ug/L	1
Dibenzo(a,h)anthracene	53-70-3	8270D	ND		1.0	0.14	ug/L	1
Dibenzofuran	132-64-9	8270D	ND		1.0	0.17	ug/L	1
3,3'-Dichlorobenzidine	91-94-1	8270D	ND		5.2	0.84	ug/L	1
2,4-Dichlorophenol	120-83-2	8270D	ND		1.0	0.16	ug/L	1
Diethylphthalate	84-66-2	8270D	ND		5.2	1.8	ug/L	1
Dimethyl phthalate	131-11-3	8270D	ND		5.2	1.8	ug/L	1
2,4-Dimethylphenol	105-67-9	8270D	ND		1.0	0.32	ug/L	1
Di-n-butyl phthalate	84-74-2	8270D	ND		5.2	1.8	ug/L	1
4,6-Dinitro-2-methylphenol	534-52-1	8270D	ND		5.2	1.5	ug/L	1
2,4-Dinitrophenol	51-28-5	8270D	ND		5.2	0.26	ug/L	1
2,4-Dinitrotoluene	121-14-2	8270D	ND		2.1	0.47	ug/L	1
2,6-Dinitrotoluene	606-20-2	8270D	ND		2.1	0.42	ug/L	1
Di-n-octylphthalate	117-84-0	8270D	ND		5.2	1.8	ug/L	1
bis(2-Ethylhexyl)phthalate	117-81-7	8270D	ND		5.2	1.8	ug/L	1
Fluoranthene	206-44-0	8270D	ND		1.0	0.22	ug/L	1
Fluorene	86-73-7	8270D	ND		1.0	0.10	ug/L	1
Hexachlorobenzene	118-74-1	8270D	ND		1.0	0.22	ug/L	1
Hexachlorobutadiene	87-68-3	8270D	ND		1.0	0.094	ug/L	1
Hexachlorocyclopentadiene	77-47-4	8270D	ND		5.2	0.24	ug/L	1

PQL = Practical quantitation limit
B = Detected in the method blank
E = Quantitation of compound exceeded the calibration range
ND = Not detected at or above the MDL
J = Estimated result < PQL and ≥ MDL
P = The RPD between two GC columns exceeds 40%
Where applicable, all soil sample analysis are reported on a dry weight basis unless flagged with a "W"
N = Recovery is out of criteria
H = Out of holding time

Semivolatile Organic Compounds by GC/MS

Client: ARCADIS U.S., Inc.
Laboratory ID: LD01022-008
Description: F39TW01 (10-15)
Matrix: Aqueous
Date Sampled: 03/31/2010 0820
Date Received: 04/01/2010

Run	Prep Method	Analytical Method	Dilution	Analysis Date	Analyst	Prep Date	Batch
1	3520C	8270D	1	04/06/2010 1703	WD	04/02/2010 2357	30843

Parameter	CAS Number	Analytical Method	Result	Q	PQL	MDL	Units	Run
Hexachloroethane	67-72-1	8270D	ND		1.0	0.11	ug/L	1
Indeno(1,2,3-c,d)pyrene	193-39-5	8270D	ND		1.0	0.24	ug/L	1
Isophorone	78-59-1	8270D	ND		1.0	0.083	ug/L	1
2-Methylnaphthalene	91-57-6	8270D	ND		1.0	0.083	ug/L	1
2-Methylphenol	95-48-7	8270D	ND		1.0	0.18	ug/L	1
3 & 4-Methylphenol	106-44-5	8270D	ND		2.1	0.59	ug/L	1
Naphthalene	91-20-3	8270D	ND		1.0	0.073	ug/L	1
2-Nitroaniline	88-74-4	8270D	ND		2.1	0.57	ug/L	1
3-Nitroaniline	99-09-2	8270D	ND		2.1	0.80	ug/L	1
4-Nitroaniline	100-01-6	8270D	ND		2.1	0.41	ug/L	1
Nitrobenzene	98-95-3	8270D	ND		1.0	0.10	ug/L	1
2-Nitrophenol	88-75-5	8270D	ND		2.1	0.28	ug/L	1
4-Nitrophenol	100-02-7	8270D	ND		5.2	0.67	ug/L	1
N-Nitrosodi-n-propylamine	621-64-7	8270D	ND		1.0	0.083	ug/L	1
N-Nitrosodiphenylamine (Diphenylamine)	86-30-6	8270D	ND		1.0	0.40	ug/L	1
Pentachlorophenol	87-86-5	8270D	ND		5.2	0.56	ug/L	1
Phenanthrene	85-01-8	8270D	ND		1.0	0.19	ug/L	1
Phenol	108-95-2	8270D	ND		1.0	0.11	ug/L	1
Pyrene	129-00-0	8270D	ND		1.0	0.17	ug/L	1
2,4,5-Trichlorophenol	95-95-4	8270D	ND		1.0	0.19	ug/L	1
2,4,6-Trichlorophenol	88-06-2	8270D	ND		1.0	0.23	ug/L	1

Surrogate	Q	Run 1 % Recovery	Acceptance Limits
2-Fluorobiphenyl		74	37-129
2-Fluorophenol		57	24-127
Nitrobenzene-d5		72	38-127
Phenol-d5		57	28-128
Terphenyl-d14		62	10-148
2,4,6-Tribromophenol		100	41-144

PQL = Practical quantitation limit
B = Detected in the method blank
E = Quantitation of compound exceeded the calibration range
ND = Not detected at or above the MDL
J = Estimated result < PQL and ≥ MDL
P = The RPD between two GC columns exceeds 40%
Where applicable, all soil sample analysis are reported on a dry weight basis unless flagged with a "W"
N = Recovery is out of criteria
H = Out of holding time

Volatile Organic Compounds by GC/MS

Client: ARCADIS U.S., Inc.
Laboratory ID: LD01022-009
Description: F39TW03 (40-45)
Matrix: Aqueous
Date Sampled: 03/31/2010 1120
Date Received: 04/01/2010

Run	Prep Method	Analytical Method	Dilution	Analysis Date	Analyst	Prep Date	Batch
1	5030B	8260B	1	04/02/2010 2020	LBS		30899

Parameter	CAS Number	Analytical Method	Result	Q	PQL	MDL	Units	Run
Acetone	67-64-1	8260B	5.2	J	10	0.061	ug/L	1
Benzene	71-43-2	8260B	ND		0.50	0.027	ug/L	1
Bromodichloromethane	75-27-4	8260B	ND		0.50	0.17	ug/L	1
Bromoform	75-25-2	8260B	ND		0.50	0.010	ug/L	1
Bromomethane (Methyl bromide)	74-83-9	8260B	ND		0.50	0.20	ug/L	1
2-Butanone (MEK)	78-93-3	8260B	ND		10	2.0	ug/L	1
Carbon disulfide	75-15-0	8260B	ND		0.50	0.097	ug/L	1
Carbon tetrachloride	56-23-5	8260B	ND		0.50	0.085	ug/L	1
Chlorobenzene	108-90-7	8260B	ND		0.50	0.17	ug/L	1
Chloroethane	75-00-3	8260B	ND		0.50	0.17	ug/L	1
Chloroform	67-66-3	8260B	ND		0.50	0.17	ug/L	1
Chloromethane (Methyl chloride)	74-87-3	8260B	ND		0.50	0.17	ug/L	1
Cyclohexane	110-82-7	8260B	ND		0.50	0.30	ug/L	1
1,2-Dibromo-3-chloropropane (DBCP)	96-12-8	8260B	ND		0.50	0.069	ug/L	1
Dibromochloromethane	124-48-1	8260B	ND		0.50	0.17	ug/L	1
1,2-Dibromoethane (EDB)	106-93-4	8260B	ND		0.50	0.061	ug/L	1
1,3-Dichlorobenzene	541-73-1	8260B	ND		0.50	0.17	ug/L	1
1,2-Dichlorobenzene	95-50-1	8260B	ND		0.50	0.17	ug/L	1
1,4-Dichlorobenzene	106-46-7	8260B	ND		0.50	0.17	ug/L	1
Dichlorodifluoromethane	75-71-8	8260B	ND		0.50	0.071	ug/L	1
1,1-Dichloroethane	75-34-3	8260B	ND		0.50	0.054	ug/L	1
1,2-Dichloroethane	107-06-2	8260B	ND		0.50	0.023	ug/L	1
trans-1,2-Dichloroethene	156-60-5	8260B	ND		0.50	0.079	ug/L	1
1,1-Dichloroethene	75-35-4	8260B	ND		0.50	0.094	ug/L	1
cis-1,2-Dichloroethene	156-59-2	8260B	ND		0.50	0.087	ug/L	1
1,2-Dichloropropane	78-87-5	8260B	ND		0.50	0.081	ug/L	1
trans-1,3-Dichloropropene	10061-02-6	8260B	ND		0.50	0.18	ug/L	1
cis-1,3-Dichloropropene	10061-01-5	8260B	ND		0.50	0.090	ug/L	1
Ethylbenzene	100-41-4	8260B	ND		0.50	0.17	ug/L	1
2-Hexanone	591-78-6	8260B	ND		10	0.27	ug/L	1
Isopropylbenzene	98-82-8	8260B	ND		0.50	0.029	ug/L	1
Methyl acetate	79-20-9	8260B	ND		1.0	0.30	ug/L	1
Methyl tertiary butyl ether (MTBE)	1634-04-4	8260B	ND		0.50	0.019	ug/L	1
4-Methyl-2-pentanone	108-10-1	8260B	ND		10	0.31	ug/L	1
Methylcyclohexane	108-87-2	8260B	ND		5.0	0.95	ug/L	1
Methylene chloride	75-09-2	8260B	0.20	BJ	0.50	0.17	ug/L	1
Styrene	100-42-5	8260B	ND		0.50	0.015	ug/L	1
1,1,2,2-Tetrachloroethane	79-34-5	8260B	ND		0.50	0.013	ug/L	1
Tetrachloroethene	127-18-4	8260B	ND		0.50	0.014	ug/L	1
Toluene	108-88-3	8260B	ND		0.50	0.17	ug/L	1
1,1,2-Trichloro-1,2,2-Trifluoroethane	76-13-1	8260B	ND		0.50	0.30	ug/L	1
1,2,4-Trichlorobenzene	120-82-1	8260B	ND		0.50	0.17	ug/L	1
1,1,1-Trichloroethane	71-55-6	8260B	ND		0.50	0.029	ug/L	1
1,1,2-Trichloroethane	79-00-5	8260B	ND		0.50	0.031	ug/L	1

PQL = Practical quantitation limit
B = Detected in the method blank
E = Quantitation of compound exceeded the calibration range
ND = Not detected at or above the MDL
J = Estimated result < PQL and ≥ MDL
P = The RPD between two GC columns exceeds 40%
Where applicable, all soil sample analysis are reported on a dry weight basis unless flagged with a "W"
N = Recovery is out of criteria
H = Out of holding time

Volatile Organic Compounds by GC/MS

Client: ARCADIS U.S., Inc.
Laboratory ID: LD01022-009
Description: F39TW03 (40-45)
Matrix: Aqueous
Date Sampled: 03/31/2010 1120
Date Received: 04/01/2010

Run	Prep Method	Analytical Method	Dilution	Analysis Date	Analyst	Prep Date	Batch
1	5030B	8260B	1	04/02/2010 2020	LBS		30899

Parameter	CAS Number	Analytical Method	Result	Q	PQL	MDL	Units	Run
Trichloroethene	79-01-6	8260B	ND		0.50	0.024	ug/L	1
Trichlorofluoromethane	75-69-4	8260B	ND		0.50	0.051	ug/L	1
Vinyl chloride	75-01-4	8260B	ND		0.50	0.065	ug/L	1
Xylenes (total)	1330-20-7	8260B	ND		0.50	0.17	ug/L	1

Surrogate	Q	Run 1 % Recovery	Acceptance Limits
1,2-Dichloroethane-d4		118	70-130
Bromofluorobenzene		97	70-130
Toluene-d8		106	70-130

PQL = Practical quantitation limit
B = Detected in the method blank
E = Quantitation of compound exceeded the calibration range
ND = Not detected at or above the MDL
J = Estimated result < PQL and ≥ MDL
P = The RPD between two GC columns exceeds 40%
Where applicable, all soil sample analysis are reported on a dry weight basis unless flagged with a "W"
N = Recovery is out of criteria
H = Out of holding time

Semivolatile Organic Compounds by GC/MS

Client: ARCADIS U.S., Inc.
Laboratory ID: LD01022-009
Description: F39TW03 (40-45)
Matrix: Aqueous
Date Sampled: 03/31/2010 1120
Date Received: 04/01/2010

Run	Prep Method	Analytical Method	Dilution	Analysis Date	Analyst	Prep Date	Batch
1	3520C	8270D	1	04/08/2010 1803	JGH	04/02/2010 2357	30843
2	3520C	8270D	1	04/13/2010 1637	JGH	04/09/2010 1700	31216

Parameter	CAS Number	Analytical Method	Result	Q	PQL	MDL	Units	Run
Acenaphthene	83-32-9	8270D	ND		1.1	0.098	ug/L	1
Acenaphthylene	208-96-8	8270D	ND		1.1	0.17	ug/L	1
Acetophenone	98-86-2	8270D	ND		1.1	0.35	ug/L	1
Anthracene	120-12-7	8270D	ND		1.1	0.14	ug/L	1
Atrazine	1912-24-9	8270D	ND		1.1	0.22	ug/L	1
Benzaldehyde	100-52-7	8270D	ND		5.4	1.1	ug/L	1
Benzo(a)anthracene	56-55-3	8270D	ND		1.1	0.16	ug/L	1
Benzo(a)pyrene	50-32-8	8270D	ND		1.1	0.17	ug/L	1
Benzo(b)fluoranthene	205-99-2	8270D	ND		1.1	0.22	ug/L	1
Benzo(g,h,i)perylene	191-24-2	8270D	ND		1.1	0.25	ug/L	1
Benzo(k)fluoranthene	207-08-9	8270D	ND		1.1	0.13	ug/L	1
1,1'-Biphenyl	92-52-4	8270D	ND		1.1	0.22	ug/L	1
4-Bromophenyl phenyl ether	101-55-3	8270D	ND		1.1	0.13	ug/L	1
Butyl benzyl phthalate	85-68-7	8270D	ND		5.4	1.8	ug/L	1
Caprolactam	105-60-2	8270D	ND		5.4	1.3	ug/L	1
Carbazole	86-74-8	8270D	ND		1.1	0.27	ug/L	1
4-Chloro-3-methyl phenol	59-50-7	8270D	ND		1.1	0.24	ug/L	1
4-Chloroaniline	106-47-8	8270D	ND		1.1	0.14	ug/L	1
bis(2-Chloroethoxy)methane	111-91-1	8270D	ND		1.1	0.14	ug/L	1
bis(2-Chloroethyl)ether	111-44-4	8270D	ND		1.1	0.14	ug/L	1
bis(2-Chloroisopropyl)ether	108-60-1	8270D	ND		1.1	0.087	ug/L	1
2-Chloronaphthalene	91-58-7	8270D	ND		1.1	0.13	ug/L	1
2-Chlorophenol	95-57-8	8270D	ND		1.1	0.14	ug/L	1
4-Chlorophenyl phenyl ether	7005-72-3	8270D	ND		1.1	0.12	ug/L	1
Chrysene	218-01-9	8270D	ND		1.1	0.13	ug/L	1
Dibenzo(a,h)anthracene	53-70-3	8270D	ND		1.1	0.14	ug/L	1
Dibenzofuran	132-64-9	8270D	ND		1.1	0.17	ug/L	1
3,3'-Dichlorobenzidine	91-94-1	8270D	ND		5.4	0.88	ug/L	1
2,4-Dichlorophenol	120-83-2	8270D	ND		1.1	0.16	ug/L	1
Diethylphthalate	84-66-2	8270D	ND		5.4	1.8	ug/L	1
Dimethyl phthalate	131-11-3	8270D	ND		5.4	1.8	ug/L	1
2,4-Dimethylphenol	105-67-9	8270D	ND		1.1	0.34	ug/L	1
Di-n-butyl phthalate	84-74-2	8270D	ND		5.4	1.8	ug/L	1
4,6-Dinitro-2-methylphenol	534-52-1	8270D	ND		5.4	1.6	ug/L	1
2,4-Dinitrophenol	51-28-5	8270D	ND		5.4	0.27	ug/L	1
2,4-Dinitrotoluene	121-14-2	8270D	ND		2.2	0.49	ug/L	1
2,6-Dinitrotoluene	606-20-2	8270D	ND		2.2	0.43	ug/L	1
Di-n-octylphthalate	117-84-0	8270D	ND		5.4	1.8	ug/L	1
bis(2-Ethylhexyl)phthalate	117-81-7	8270D	ND		5.4	1.8	ug/L	1
Fluoranthene	206-44-0	8270D	ND		1.1	0.23	ug/L	1
Fluorene	86-73-7	8270D	ND		1.1	0.11	ug/L	1
Hexachlorobenzene	118-74-1	8270D	ND		1.1	0.23	ug/L	1
Hexachlorobutadiene	87-68-3	8270D	ND		1.1	0.098	ug/L	1

PQL = Practical quantitation limit
B = Detected in the method blank
E = Quantitation of compound exceeded the calibration range
ND = Not detected at or above the MDL
J = Estimated result < PQL and ≥ MDL
P = The RPD between two GC columns exceeds 40%
Where applicable, all soil sample analysis are reported on a dry weight basis unless flagged with a "W"
N = Recovery is out of criteria
H = Out of holding time

Semivolatile Organic Compounds by GC/MS

Client: ARCADIS U.S., Inc.
Laboratory ID: LD01022-009
Description: F39TW03 (40-45)
Matrix: Aqueous
Date Sampled: 03/31/2010 1120
Date Received: 04/01/2010

Run	Prep Method	Analytical Method	Dilution	Analysis Date	Analyst	Prep Date	Batch
1	3520C	8270D	1	04/08/2010 1803	JGH	04/02/2010 2357	30843
2	3520C	8270D	1	04/13/2010 1637	JGH	04/09/2010 1700	31216

Parameter	CAS Number	Analytical Method	Result	Q	PQL	MDL	Units	Run
Hexachlorocyclopentadiene	77-47-4	8270D	ND		5.4	0.25	ug/L	1
Hexachloroethane	67-72-1	8270D	ND		1.1	0.12	ug/L	1
Indeno(1,2,3-c,d)pyrene	193-39-5	8270D	ND		1.1	0.25	ug/L	1
Isophorone	78-59-1	8270D	ND		1.1	0.087	ug/L	1
2-Methylnaphthalene	91-57-6	8270D	ND		1.1	0.087	ug/L	1
2-Methylphenol	95-48-7	8270D	ND		1.1	0.18	ug/L	1
3 & 4-Methylphenol	106-44-5	8270D	ND		2.2	0.62	ug/L	1
Naphthalene	91-20-3	8270D	ND		1.1	0.076	ug/L	1
2-Nitroaniline	88-74-4	8270D	ND		2.2	0.60	ug/L	1
3-Nitroaniline	99-09-2	8270D	ND		2.2	0.84	ug/L	1
4-Nitroaniline	100-01-6	8270D	ND		2.2	0.42	ug/L	1
Nitrobenzene	98-95-3	8270D	ND		1.1	0.11	ug/L	1
2-Nitrophenol	88-75-5	8270D	ND		2.2	0.29	ug/L	1
4-Nitrophenol	100-02-7	8270D	ND		5.4	0.70	ug/L	1
N-Nitrosodi-n-propylamine	621-64-7	8270D	ND		1.1	0.087	ug/L	1
N-Nitrosodiphenylamine (Diphenylamine)	86-30-6	8270D	ND		1.1	0.41	ug/L	1
Pentachlorophenol	87-86-5	8270D	ND		5.4	0.59	ug/L	1
Phenanthrene	85-01-8	8270D	ND		1.1	0.20	ug/L	1
Phenol	108-95-2	8270D	ND		1.1	0.12	ug/L	1
Pyrene	129-00-0	8270D	ND		1.1	0.17	ug/L	1
2,4,5-Trichlorophenol	95-95-4	8270D	ND		1.1	0.20	ug/L	1
2,4,6-Trichlorophenol	88-06-2	8270D	ND		1.1	0.24	ug/L	1

Surrogate	Q	Run 1 % Recovery	Acceptance Limits	Q	Run 2 % Recovery	Acceptance Limits
2-Fluorobiphenyl		59	37-129	H	55	37-129
2-Fluorophenol		75	24-127	H	63	24-127
Nitrobenzene-d5		72	38-127	H	75	38-127
Phenol-d5		76	28-128	H	66	28-128
Terphenyl-d14	N	8.0	10-148	HN	7.0	10-148
2,4,6-Tribromophenol		69	41-144	H	65	41-144

PQL = Practical quantitation limit
B = Detected in the method blank
E = Quantitation of compound exceeded the calibration range
ND = Not detected at or above the MDL
J = Estimated result < PQL and ≥ MDL
P = The RPD between two GC columns exceeds 40%
Where applicable, all soil sample analysis are reported on a dry weight basis unless flagged with a "W"
N = Recovery is out of criteria
H = Out of holding time

Semivolatile Organic Compounds by GC/MS

Client: ARCADIS U.S., Inc.
Laboratory ID: LD01022-009
Description: F39TW03 (40-45)
Matrix: Aqueous
Date Sampled: 03/31/2010 1120
Date Received: 04/01/2010

Run	Prep Method	Analytical Method	Dilution	Analysis Date	Analyst	Prep Date	Batch
1	3520C	8270D	1	04/08/2010 1803	JGH	04/02/2010 2357	30843
2	3520C	8270D	1	04/13/2010 1637	JGH	04/09/2010 1700	31216

Parameter	CAS Number	Analytical Method	Result	Q	PQL	MDL	Units	Run
Acenaphthene	83-32-9	8270D	ND	H	1.0	0.093	ug/L	2
Acenaphthylene	208-96-8	8270D	ND	H	1.0	0.16	ug/L	2
Acetophenone	98-86-2	8270D	ND	H	1.0	0.33	ug/L	2
Anthracene	120-12-7	8270D	ND	H	1.0	0.13	ug/L	2
Atrazine	1912-24-9	8270D	ND	H	1.0	0.21	ug/L	2
Benzaldehyde	100-52-7	8270D	ND	H	5.2	1.0	ug/L	2
Benzo(a)anthracene	56-55-3	8270D	ND	H	1.0	0.15	ug/L	2
Benzo(a)pyrene	50-32-8	8270D	ND	H	1.0	0.16	ug/L	2
Benzo(b)fluoranthene	205-99-2	8270D	ND	H	1.0	0.21	ug/L	2
Benzo(g,h,i)perylene	191-24-2	8270D	ND	H	1.0	0.24	ug/L	2
Benzo(k)fluoranthene	207-08-9	8270D	ND	H	1.0	0.12	ug/L	2
1,1'-Biphenyl	92-52-4	8270D	ND	H	1.0	0.21	ug/L	2
4-Bromophenyl phenyl ether	101-55-3	8270D	ND	H	1.0	0.12	ug/L	2
Butyl benzyl phthalate	85-68-7	8270D	ND	H	5.2	1.8	ug/L	2
Caprolactam	105-60-2	8270D	ND	H	5.2	1.2	ug/L	2
Carbazole	86-74-8	8270D	ND	H	1.0	0.26	ug/L	2
4-Chloro-3-methyl phenol	59-50-7	8270D	ND	H	1.0	0.23	ug/L	2
4-Chloroaniline	106-47-8	8270D	ND	H	1.0	0.13	ug/L	2
bis(2-Chloroethoxy)methane	111-91-1	8270D	ND	H	1.0	0.13	ug/L	2
bis(2-Chloroethyl)ether	111-44-4	8270D	ND	H	1.0	0.13	ug/L	2
bis(2-Chloroisopropyl)ether	108-60-1	8270D	ND	H	1.0	0.082	ug/L	2
2-Chloronaphthalene	91-58-7	8270D	ND	H	1.0	0.12	ug/L	2
2-Chlorophenol	95-57-8	8270D	ND	H	1.0	0.13	ug/L	2
4-Chlorophenyl phenyl ether	7005-72-3	8270D	ND	H	1.0	0.11	ug/L	2
Chrysene	218-01-9	8270D	ND	H	1.0	0.12	ug/L	2
Dibenzo(a,h)anthracene	53-70-3	8270D	ND	H	1.0	0.13	ug/L	2
Dibenzofuran	132-64-9	8270D	ND	H	1.0	0.16	ug/L	2
3,3'-Dichlorobenzidine	91-94-1	8270D	ND	H	5.2	0.84	ug/L	2
2,4-Dichlorophenol	120-83-2	8270D	ND	H	1.0	0.15	ug/L	2
Diethylphthalate	84-66-2	8270D	ND	H	5.2	1.8	ug/L	2
Dimethyl phthalate	131-11-3	8270D	ND	H	5.2	1.8	ug/L	2
2,4-Dimethylphenol	105-67-9	8270D	ND	H	1.0	0.32	ug/L	2
Di-n-butyl phthalate	84-74-2	8270D	ND	H	5.2	1.8	ug/L	2
4,6-Dinitro-2-methylphenol	534-52-1	8270D	ND	H	5.2	1.5	ug/L	2
2,4-Dinitrophenol	51-28-5	8270D	ND	H	5.2	0.26	ug/L	2
2,4-Dinitrotoluene	121-14-2	8270D	ND	H	2.1	0.46	ug/L	2
2,6-Dinitrotoluene	606-20-2	8270D	ND	H	2.1	0.41	ug/L	2
Di-n-octylphthalate	117-84-0	8270D	ND	H	5.2	1.8	ug/L	2
bis(2-Ethylhexyl)phthalate	117-81-7	8270D	ND	H	5.2	1.8	ug/L	2
Fluoranthene	206-44-0	8270D	ND	H	1.0	0.22	ug/L	2
Fluorene	86-73-7	8270D	ND	H	1.0	0.10	ug/L	2
Hexachlorobenzene	118-74-1	8270D	ND	H	1.0	0.22	ug/L	2
Hexachlorobutadiene	87-68-3	8270D	ND	H	1.0	0.093	ug/L	2

PQL = Practical quantitation limit
B = Detected in the method blank
E = Quantitation of compound exceeded the calibration range
ND = Not detected at or above the MDL
J = Estimated result < PQL and ≥ MDL
P = The RPD between two GC columns exceeds 40%
Where applicable, all soil sample analysis are reported on a dry weight basis unless flagged with a "W"
N = Recovery is out of criteria
H = Out of holding time

Semivolatile Organic Compounds by GC/MS

Client: ARCADIS U.S., Inc.
Laboratory ID: LD01022-009
Description: F39TW03 (40-45)
Matrix: Aqueous
Date Sampled: 03/31/2010 1120
Date Received: 04/01/2010

Run	Prep Method	Analytical Method	Dilution	Analysis Date	Analyst	Prep Date	Batch
1	3520C	8270D	1	04/08/2010 1803	JGH	04/02/2010 2357	30843
2	3520C	8270D	1	04/13/2010 1637	JGH	04/09/2010 1700	31216

Parameter	CAS Number	Analytical Method	Result	Q	PQL	MDL	Units	Run
Hexachlorocyclopentadiene	77-47-4	8270D	ND	H	5.2	0.24	ug/L	2
Hexachloroethane	67-72-1	8270D	ND	H	1.0	0.11	ug/L	2
Indeno(1,2,3-c,d)pyrene	193-39-5	8270D	ND	H	1.0	0.24	ug/L	2
Isophorone	78-59-1	8270D	ND	H	1.0	0.082	ug/L	2
2-Methylnaphthalene	91-57-6	8270D	ND	H	1.0	0.082	ug/L	2
2-Methylphenol	95-48-7	8270D	ND	H	1.0	0.18	ug/L	2
3 & 4-Methylphenol	106-44-5	8270D	ND	H	2.1	0.59	ug/L	2
Naphthalene	91-20-3	8270D	ND	H	1.0	0.072	ug/L	2
2-Nitroaniline	88-74-4	8270D	ND	H	2.1	0.57	ug/L	2
3-Nitroaniline	99-09-2	8270D	ND	H	2.1	0.79	ug/L	2
4-Nitroaniline	100-01-6	8270D	ND	H	2.1	0.40	ug/L	2
Nitrobenzene	98-95-3	8270D	ND	H	1.0	0.10	ug/L	2
2-Nitrophenol	88-75-5	8270D	ND	H	2.1	0.28	ug/L	2
4-Nitrophenol	100-02-7	8270D	ND	H	5.2	0.66	ug/L	2
N-Nitrosodi-n-propylamine	621-64-7	8270D	ND	H	1.0	0.082	ug/L	2
N-Nitrosodiphenylamine (Diphenylamine)	86-30-6	8270D	ND	H	1.0	0.39	ug/L	2
Pentachlorophenol	87-86-5	8270D	ND	H	5.2	0.56	ug/L	2
Phenanthrene	85-01-8	8270D	ND	H	1.0	0.19	ug/L	2
Phenol	108-95-2	8270D	ND	H	1.0	0.11	ug/L	2
Pyrene	129-00-0	8270D	ND	H	1.0	0.16	ug/L	2
2,4,5-Trichlorophenol	95-95-4	8270D	ND	H	1.0	0.19	ug/L	2
2,4,6-Trichlorophenol	88-06-2	8270D	ND	H	1.0	0.23	ug/L	2

Surrogate	Q	Run 1 % Recovery	Acceptance Limits	Q	Run 2 % Recovery	Acceptance Limits
2-Fluorobiphenyl		59	37-129	H	55	37-129
2-Fluorophenol		75	24-127	H	63	24-127
Nitrobenzene-d5		72	38-127	H	75	38-127
Phenol-d5		76	28-128	H	66	28-128
Terphenyl-d14	N	8.0	10-148	HN	7.0	10-148
2,4,6-Tribromophenol		69	41-144	H	65	41-144

PQL = Practical quantitation limit
B = Detected in the method blank
E = Quantitation of compound exceeded the calibration range
ND = Not detected at or above the MDL
J = Estimated result < PQL and ≥ MDL
P = The RPD between two GC columns exceeds 40%
Where applicable, all soil sample analysis are reported on a dry weight basis unless flagged with a "W"
N = Recovery is out of criteria
H = Out of holding time

Volatile Organic Compounds by GC/MS

Client: ARCADIS U.S., Inc.
Laboratory ID: LD01022-010
Description: F39TW03 (10-15)
Matrix: Aqueous
Date Sampled: 03/31/2010 1129
Date Received: 04/01/2010

Run	Prep Method	Analytical Method	Dilution	Analysis Date	Analyst	Prep Date	Batch
1	5030B	8260B	1	04/02/2010 2042	LBS		30899

Parameter	CAS Number	Analytical Method	Result	Q	PQL	MDL	Units	Run
Acetone	67-64-1	8260B	5.0	J	10	0.061	ug/L	1
Benzene	71-43-2	8260B	ND		0.50	0.027	ug/L	1
Bromodichloromethane	75-27-4	8260B	ND		0.50	0.17	ug/L	1
Bromoform	75-25-2	8260B	ND		0.50	0.010	ug/L	1
Bromomethane (Methyl bromide)	74-83-9	8260B	ND		0.50	0.20	ug/L	1
2-Butanone (MEK)	78-93-3	8260B	ND		10	2.0	ug/L	1
Carbon disulfide	75-15-0	8260B	ND		0.50	0.097	ug/L	1
Carbon tetrachloride	56-23-5	8260B	ND		0.50	0.085	ug/L	1
Chlorobenzene	108-90-7	8260B	ND		0.50	0.17	ug/L	1
Chloroethane	75-00-3	8260B	ND		0.50	0.17	ug/L	1
Chloroform	67-66-3	8260B	ND		0.50	0.17	ug/L	1
Chloromethane (Methyl chloride)	74-87-3	8260B	ND		0.50	0.17	ug/L	1
Cyclohexane	110-82-7	8260B	ND		0.50	0.30	ug/L	1
1,2-Dibromo-3-chloropropane (DBCP)	96-12-8	8260B	ND		0.50	0.069	ug/L	1
Dibromochloromethane	124-48-1	8260B	ND		0.50	0.17	ug/L	1
1,2-Dibromoethane (EDB)	106-93-4	8260B	ND		0.50	0.061	ug/L	1
1,3-Dichlorobenzene	541-73-1	8260B	ND		0.50	0.17	ug/L	1
1,2-Dichlorobenzene	95-50-1	8260B	ND		0.50	0.17	ug/L	1
1,4-Dichlorobenzene	106-46-7	8260B	ND		0.50	0.17	ug/L	1
Dichlorodifluoromethane	75-71-8	8260B	ND		0.50	0.071	ug/L	1
1,1-Dichloroethane	75-34-3	8260B	ND		0.50	0.054	ug/L	1
1,2-Dichloroethane	107-06-2	8260B	ND		0.50	0.023	ug/L	1
trans-1,2-Dichloroethene	156-60-5	8260B	ND		0.50	0.079	ug/L	1
1,1-Dichloroethene	75-35-4	8260B	0.19	J	0.50	0.094	ug/L	1
cis-1,2-Dichloroethene	156-59-2	8260B	0.28	J	0.50	0.087	ug/L	1
1,2-Dichloropropane	78-87-5	8260B	ND		0.50	0.081	ug/L	1
trans-1,3-Dichloropropene	10061-02-6	8260B	ND		0.50	0.18	ug/L	1
cis-1,3-Dichloropropene	10061-01-5	8260B	ND		0.50	0.090	ug/L	1
Ethylbenzene	100-41-4	8260B	ND		0.50	0.17	ug/L	1
2-Hexanone	591-78-6	8260B	ND		10	0.27	ug/L	1
Isopropylbenzene	98-82-8	8260B	ND		0.50	0.029	ug/L	1
Methyl acetate	79-20-9	8260B	ND		1.0	0.30	ug/L	1
Methyl tertiary butyl ether (MTBE)	1634-04-4	8260B	ND		0.50	0.019	ug/L	1
4-Methyl-2-pentanone	108-10-1	8260B	ND		10	0.31	ug/L	1
Methylcyclohexane	108-87-2	8260B	ND		5.0	0.95	ug/L	1
Methylene chloride	75-09-2	8260B	0.18	BJ	0.50	0.17	ug/L	1
Styrene	100-42-5	8260B	ND		0.50	0.015	ug/L	1
1,1,2,2-Tetrachloroethane	79-34-5	8260B	ND		0.50	0.013	ug/L	1
Tetrachloroethene	127-18-4	8260B	ND		0.50	0.014	ug/L	1
Toluene	108-88-3	8260B	ND		0.50	0.17	ug/L	1
1,1,2-Trichloro-1,2,2-Trifluoroethane	76-13-1	8260B	ND		0.50	0.30	ug/L	1
1,2,4-Trichlorobenzene	120-82-1	8260B	ND		0.50	0.17	ug/L	1
1,1,1-Trichloroethane	71-55-6	8260B	ND		0.50	0.029	ug/L	1
1,1,2-Trichloroethane	79-00-5	8260B	ND		0.50	0.031	ug/L	1

PQL = Practical quantitation limit
B = Detected in the method blank
E = Quantitation of compound exceeded the calibration range
ND = Not detected at or above the MDL
J = Estimated result < PQL and ≥ MDL
P = The RPD between two GC columns exceeds 40%
Where applicable, all soil sample analysis are reported on a dry weight basis unless flagged with a "W"
N = Recovery is out of criteria
H = Out of holding time

Volatile Organic Compounds by GC/MS

Client: ARCADIS U.S., Inc.
Laboratory ID: LD01022-010
Description: F39TW03 (10-15)
Matrix: Aqueous
Date Sampled: 03/31/2010 1129
Date Received: 04/01/2010

Run	Prep Method	Analytical Method	Dilution	Analysis Date	Analyst	Prep Date	Batch
1	5030B	8260B	1	04/02/2010 2042	LBS		30899

Parameter	CAS Number	Analytical Method	Result	Q	PQL	MDL	Units	Run
Trichloroethene	79-01-6	8260B	0.37	J	0.50	0.024	ug/L	1
Trichlorofluoromethane	75-69-4	8260B	ND		0.50	0.051	ug/L	1
Vinyl chloride	75-01-4	8260B	ND		0.50	0.065	ug/L	1
Xylenes (total)	1330-20-7	8260B	ND		0.50	0.17	ug/L	1

Surrogate	Q	Run 1 % Recovery	Acceptance Limits
1,2-Dichloroethane-d4		117	70-130
Bromofluorobenzene		97	70-130
Toluene-d8		109	70-130

PQL = Practical quantitation limit
B = Detected in the method blank
E = Quantitation of compound exceeded the calibration range
ND = Not detected at or above the MDL
J = Estimated result < PQL and ≥ MDL
P = The RPD between two GC columns exceeds 40%
Where applicable, all soil sample analysis are reported on a dry weight basis unless flagged with a "W"
N = Recovery is out of criteria
H = Out of holding time

Semivolatile Organic Compounds by GC/MS

Client: ARCADIS U.S., Inc.
Laboratory ID: LD01022-010
Description: F39TW03 (10-15)
Matrix: Aqueous
Date Sampled: 03/31/2010 1129
Date Received: 04/01/2010

Run	Prep Method	Analytical Method	Dilution	Analysis Date	Analyst	Prep Date	Batch
1	3520C	8270D	1	04/06/2010 1744	WD	04/02/2010 2357	30843

Parameter	CAS Number	Analytical Method	Result	Q	PQL	MDL	Units	Run
Acenaphthene	83-32-9	8270D	ND		1.0	0.091	ug/L	1
Acenaphthylene	208-96-8	8270D	ND		1.0	0.16	ug/L	1
Acetophenone	98-86-2	8270D	ND		1.0	0.32	ug/L	1
Anthracene	120-12-7	8270D	ND		1.0	0.13	ug/L	1
Atrazine	1912-24-9	8270D	ND		1.0	0.20	ug/L	1
Benzaldehyde	100-52-7	8270D	ND		5.1	1.0	ug/L	1
Benzo(a)anthracene	56-55-3	8270D	ND		1.0	0.15	ug/L	1
Benzo(a)pyrene	50-32-8	8270D	ND		1.0	0.16	ug/L	1
Benzo(b)fluoranthene	205-99-2	8270D	ND		1.0	0.20	ug/L	1
Benzo(g,h,i)perylene	191-24-2	8270D	ND		1.0	0.23	ug/L	1
Benzo(k)fluoranthene	207-08-9	8270D	ND		1.0	0.12	ug/L	1
1,1'-Biphenyl	92-52-4	8270D	ND		1.0	0.20	ug/L	1
4-Bromophenyl phenyl ether	101-55-3	8270D	ND		1.0	0.12	ug/L	1
Butyl benzyl phthalate	85-68-7	8270D	ND		5.1	1.7	ug/L	1
Caprolactam	105-60-2	8270D	ND		5.1	1.2	ug/L	1
Carbazole	86-74-8	8270D	ND		1.0	0.25	ug/L	1
4-Chloro-3-methyl phenol	59-50-7	8270D	ND		1.0	0.22	ug/L	1
4-Chloroaniline	106-47-8	8270D	ND		1.0	0.13	ug/L	1
bis(2-Chloroethoxy)methane	111-91-1	8270D	ND		1.0	0.13	ug/L	1
bis(2-Chloroethyl)ether	111-44-4	8270D	ND		1.0	0.13	ug/L	1
bis(2-Chloroisopropyl)ether	108-60-1	8270D	ND		1.0	0.081	ug/L	1
2-Chloronaphthalene	91-58-7	8270D	ND		1.0	0.12	ug/L	1
2-Chlorophenol	95-57-8	8270D	ND		1.0	0.13	ug/L	1
4-Chlorophenyl phenyl ether	7005-72-3	8270D	ND		1.0	0.11	ug/L	1
Chrysene	218-01-9	8270D	ND		1.0	0.12	ug/L	1
Dibenzo(a,h)anthracene	53-70-3	8270D	ND		1.0	0.13	ug/L	1
Dibenzofuran	132-64-9	8270D	ND		1.0	0.16	ug/L	1
3,3'-Dichlorobenzidine	91-94-1	8270D	ND		5.1	0.82	ug/L	1
2,4-Dichlorophenol	120-83-2	8270D	ND		1.0	0.15	ug/L	1
Diethylphthalate	84-66-2	8270D	ND		5.1	1.7	ug/L	1
Dimethyl phthalate	131-11-3	8270D	ND		5.1	1.7	ug/L	1
2,4-Dimethylphenol	105-67-9	8270D	ND		1.0	0.31	ug/L	1
Di-n-butyl phthalate	84-74-2	8270D	ND		5.1	1.7	ug/L	1
4,6-Dinitro-2-methylphenol	534-52-1	8270D	ND		5.1	1.5	ug/L	1
2,4-Dinitrophenol	51-28-5	8270D	ND		5.1	0.25	ug/L	1
2,4-Dinitrotoluene	121-14-2	8270D	ND		2.0	0.45	ug/L	1
2,6-Dinitrotoluene	606-20-2	8270D	ND		2.0	0.40	ug/L	1
Di-n-octylphthalate	117-84-0	8270D	ND		5.1	1.7	ug/L	1
bis(2-Ethylhexyl)phthalate	117-81-7	8270D	ND		5.1	1.7	ug/L	1
Fluoranthene	206-44-0	8270D	ND		1.0	0.21	ug/L	1
Fluorene	86-73-7	8270D	ND		1.0	0.10	ug/L	1
Hexachlorobenzene	118-74-1	8270D	ND		1.0	0.21	ug/L	1
Hexachlorobutadiene	87-68-3	8270D	ND		1.0	0.091	ug/L	1
Hexachlorocyclopentadiene	77-47-4	8270D	ND		5.1	0.23	ug/L	1

PQL = Practical quantitation limit
B = Detected in the method blank
E = Quantitation of compound exceeded the calibration range
ND = Not detected at or above the MDL
J = Estimated result < PQL and ≥ MDL
P = The RPD between two GC columns exceeds 40%
Where applicable, all soil sample analysis are reported on a dry weight basis unless flagged with a "W"
N = Recovery is out of criteria
H = Out of holding time

Semivolatile Organic Compounds by GC/MS

Client: ARCADIS U.S., Inc.
Laboratory ID: LD01022-010
Description: F39TW03 (10-15)
Matrix: Aqueous
Date Sampled: 03/31/2010 1129
Date Received: 04/01/2010

Run	Prep Method	Analytical Method	Dilution	Analysis Date	Analyst	Prep Date	Batch
1	3520C	8270D	1	04/06/2010 1744	WD	04/02/2010 2357	30843

Parameter	CAS Number	Analytical Method	Result	Q	PQL	MDL	Units	Run
Hexachloroethane	67-72-1	8270D	ND		1.0	0.11	ug/L	1
Indeno(1,2,3-c,d)pyrene	193-39-5	8270D	ND		1.0	0.23	ug/L	1
Isophorone	78-59-1	8270D	ND		1.0	0.081	ug/L	1
2-Methylnaphthalene	91-57-6	8270D	ND		1.0	0.081	ug/L	1
2-Methylphenol	95-48-7	8270D	ND		1.0	0.17	ug/L	1
3 & 4-Methylphenol	106-44-5	8270D	ND		2.0	0.58	ug/L	1
Naphthalene	91-20-3	8270D	ND		1.0	0.071	ug/L	1
2-Nitroaniline	88-74-4	8270D	ND		2.0	0.56	ug/L	1
3-Nitroaniline	99-09-2	8270D	ND		2.0	0.78	ug/L	1
4-Nitroaniline	100-01-6	8270D	ND		2.0	0.39	ug/L	1
Nitrobenzene	98-95-3	8270D	ND		1.0	0.10	ug/L	1
2-Nitrophenol	88-75-5	8270D	ND		2.0	0.27	ug/L	1
4-Nitrophenol	100-02-7	8270D	ND		5.1	0.65	ug/L	1
N-Nitrosodi-n-propylamine	621-64-7	8270D	ND		1.0	0.081	ug/L	1
N-Nitrosodiphenylamine (Diphenylamine)	86-30-6	8270D	ND		1.0	0.38	ug/L	1
Pentachlorophenol	87-86-5	8270D	ND		5.1	0.55	ug/L	1
Phenanthrene	85-01-8	8270D	ND		1.0	0.18	ug/L	1
Phenol	108-95-2	8270D	ND		1.0	0.11	ug/L	1
Pyrene	129-00-0	8270D	ND		1.0	0.16	ug/L	1
2,4,5-Trichlorophenol	95-95-4	8270D	ND		1.0	0.18	ug/L	1
2,4,6-Trichlorophenol	88-06-2	8270D	ND		1.0	0.22	ug/L	1

Surrogate	Q	Run 1 % Recovery	Acceptance Limits
2-Fluorobiphenyl		82	37-129
2-Fluorophenol		66	24-127
Nitrobenzene-d5		80	38-127
Phenol-d5		61	28-128
Terphenyl-d14		69	10-148
2,4,6-Tribromophenol		106	41-144

PQL = Practical quantitation limit
B = Detected in the method blank
E = Quantitation of compound exceeded the calibration range
ND = Not detected at or above the MDL
J = Estimated result < PQL and ≥ MDL
P = The RPD between two GC columns exceeds 40%
Where applicable, all soil sample analysis are reported on a dry weight basis unless flagged with a "W"
N = Recovery is out of criteria
H = Out of holding time

Volatile Organic Compounds by GC/MS

Client: ARCADIS U.S., Inc.
Laboratory ID: LD01022-011
Description: F39TW03 (30-35)
Matrix: Aqueous
Date Sampled: 03/31/2010 1446
Date Received: 04/01/2010

Run	Prep Method	Analytical Method	Dilution	Analysis Date	Analyst	Prep Date	Batch
1	5030B	8260B	1	04/03/2010 0442	RRH		30893

Parameter	CAS Number	Analytical Method	Result	Q	PQL	MDL	Units	Run
Acetone	67-64-1	8260B	2.4	J	10	0.061	ug/L	1
Benzene	71-43-2	8260B	2.2		0.50	0.027	ug/L	1
Bromodichloromethane	75-27-4	8260B	ND		0.50	0.17	ug/L	1
Bromoform	75-25-2	8260B	ND		0.50	0.010	ug/L	1
Bromomethane (Methyl bromide)	74-83-9	8260B	ND		0.50	0.20	ug/L	1
2-Butanone (MEK)	78-93-3	8260B	ND		10	2.0	ug/L	1
Carbon disulfide	75-15-0	8260B	ND		0.50	0.097	ug/L	1
Carbon tetrachloride	56-23-5	8260B	ND		0.50	0.085	ug/L	1
Chlorobenzene	108-90-7	8260B	ND		0.50	0.17	ug/L	1
Chloroethane	75-00-3	8260B	ND		0.50	0.17	ug/L	1
Chloroform	67-66-3	8260B	ND		0.50	0.17	ug/L	1
Chloromethane (Methyl chloride)	74-87-3	8260B	ND		0.50	0.17	ug/L	1
Cyclohexane	110-82-7	8260B	ND		0.50	0.30	ug/L	1
1,2-Dibromo-3-chloropropane (DBCP)	96-12-8	8260B	ND		0.50	0.069	ug/L	1
Dibromochloromethane	124-48-1	8260B	ND		0.50	0.17	ug/L	1
1,2-Dibromoethane (EDB)	106-93-4	8260B	ND		0.50	0.061	ug/L	1
1,3-Dichlorobenzene	541-73-1	8260B	ND		0.50	0.17	ug/L	1
1,2-Dichlorobenzene	95-50-1	8260B	ND		0.50	0.17	ug/L	1
1,4-Dichlorobenzene	106-46-7	8260B	ND		0.50	0.17	ug/L	1
Dichlorodifluoromethane	75-71-8	8260B	ND		0.50	0.071	ug/L	1
1,1-Dichloroethane	75-34-3	8260B	1.4		0.50	0.054	ug/L	1
1,2-Dichloroethane	107-06-2	8260B	ND		0.50	0.023	ug/L	1
trans-1,2-Dichloroethene	156-60-5	8260B	0.62		0.50	0.079	ug/L	1
1,1-Dichloroethene	75-35-4	8260B	2.4		0.50	0.094	ug/L	1
cis-1,2-Dichloroethene	156-59-2	8260B	10		0.50	0.087	ug/L	1
1,2-Dichloropropane	78-87-5	8260B	ND		0.50	0.081	ug/L	1
trans-1,3-Dichloropropene	10061-02-6	8260B	ND		0.50	0.18	ug/L	1
cis-1,3-Dichloropropene	10061-01-5	8260B	ND		0.50	0.090	ug/L	1
Ethylbenzene	100-41-4	8260B	ND		0.50	0.17	ug/L	1
2-Hexanone	591-78-6	8260B	ND		10	0.27	ug/L	1
Isopropylbenzene	98-82-8	8260B	ND		0.50	0.029	ug/L	1
Methyl acetate	79-20-9	8260B	ND		1.0	0.30	ug/L	1
Methyl tertiary butyl ether (MTBE)	1634-04-4	8260B	ND		0.50	0.019	ug/L	1
4-Methyl-2-pentanone	108-10-1	8260B	ND		10	0.31	ug/L	1
Methylcyclohexane	108-87-2	8260B	ND		5.0	0.95	ug/L	1
Methylene chloride	75-09-2	8260B	0.20	BJ	0.50	0.17	ug/L	1
Styrene	100-42-5	8260B	ND		0.50	0.015	ug/L	1
1,1,2,2-Tetrachloroethane	79-34-5	8260B	ND		0.50	0.013	ug/L	1
Tetrachloroethene	127-18-4	8260B	0.32	J	0.50	0.014	ug/L	1
Toluene	108-88-3	8260B	ND		0.50	0.17	ug/L	1
1,1,2-Trichloro-1,2,2-Trifluoroethane	76-13-1	8260B	ND		0.50	0.30	ug/L	1
1,2,4-Trichlorobenzene	120-82-1	8260B	ND		0.50	0.17	ug/L	1
1,1,1-Trichloroethane	71-55-6	8260B	ND		0.50	0.029	ug/L	1
1,1,2-Trichloroethane	79-00-5	8260B	ND		0.50	0.031	ug/L	1

PQL = Practical quantitation limit
B = Detected in the method blank
E = Quantitation of compound exceeded the calibration range
ND = Not detected at or above the MDL
J = Estimated result < PQL and ≥ MDL
P = The RPD between two GC columns exceeds 40%
Where applicable, all soil sample analysis are reported on a dry weight basis unless flagged with a "W"
N = Recovery is out of criteria
H = Out of holding time

Volatile Organic Compounds by GC/MS

Client: ARCADIS U.S., Inc.
Laboratory ID: LD01022-011
Description: F39TW03 (30-35)
Matrix: Aqueous
Date Sampled: 03/31/2010 1446
Date Received: 04/01/2010

Run	Prep Method	Analytical Method	Dilution	Analysis Date	Analyst	Prep Date	Batch
1	5030B	8260B	1	04/03/2010 0442	RRH		30893

Parameter	CAS Number	Analytical Method	Result	Q	PQL	MDL	Units	Run
Trichloroethene	79-01-6	8260B	20		0.50	0.024	ug/L	1
Trichlorofluoromethane	75-69-4	8260B	ND		0.50	0.051	ug/L	1
Vinyl chloride	75-01-4	8260B	ND		0.50	0.065	ug/L	1
Xylenes (total)	1330-20-7	8260B	ND		0.50	0.17	ug/L	1

Surrogate	Q	Run 1 % Recovery	Acceptance Limits
1,2-Dichloroethane-d4		98	70-130
Bromofluorobenzene		100	70-130
Toluene-d8		101	70-130

PQL = Practical quantitation limit
B = Detected in the method blank
E = Quantitation of compound exceeded the calibration range
ND = Not detected at or above the MDL
J = Estimated result < PQL and ≥ MDL
P = The RPD between two GC columns exceeds 40%
Where applicable, all soil sample analysis are reported on a dry weight basis unless flagged with a "W"
N = Recovery is out of criteria
H = Out of holding time

Semivolatile Organic Compounds by GC/MS

Client: ARCADIS U.S., Inc.
Laboratory ID: LD01022-011
Description: F39TW03 (30-35)
Matrix: Aqueous
Date Sampled: 03/31/2010 1446
Date Received: 04/01/2010

Run	Prep Method	Analytical Method	Dilution	Analysis Date	Analyst	Prep Date	Batch
1	3520C	8270D	1	04/06/2010 1804	WD	04/02/2010 2357	30843

Parameter	CAS Number	Analytical Method	Result	Q	PQL	MDL	Units	Run
Acenaphthene	83-32-9	8270D	ND		1.1	0.095	ug/L	1
Acenaphthylene	208-96-8	8270D	ND		1.1	0.17	ug/L	1
Acetophenone	98-86-2	8270D	ND		1.1	0.34	ug/L	1
Anthracene	120-12-7	8270D	ND		1.1	0.14	ug/L	1
Atrazine	1912-24-9	8270D	ND		1.1	0.21	ug/L	1
Benzaldehyde	100-52-7	8270D	ND		5.3	1.1	ug/L	1
Benzo(a)anthracene	56-55-3	8270D	ND		1.1	0.16	ug/L	1
Benzo(a)pyrene	50-32-8	8270D	ND		1.1	0.17	ug/L	1
Benzo(b)fluoranthene	205-99-2	8270D	ND		1.1	0.21	ug/L	1
Benzo(g,h,i)perylene	191-24-2	8270D	ND		1.1	0.24	ug/L	1
Benzo(k)fluoranthene	207-08-9	8270D	ND		1.1	0.13	ug/L	1
1,1'-Biphenyl	92-52-4	8270D	ND		1.1	0.21	ug/L	1
4-Bromophenyl phenyl ether	101-55-3	8270D	ND		1.1	0.13	ug/L	1
Butyl benzyl phthalate	85-68-7	8270D	ND		5.3	1.8	ug/L	1
Caprolactam	105-60-2	8270D	ND		5.3	1.3	ug/L	1
Carbazole	86-74-8	8270D	ND		1.1	0.26	ug/L	1
4-Chloro-3-methyl phenol	59-50-7	8270D	ND		1.1	0.23	ug/L	1
4-Chloroaniline	106-47-8	8270D	ND		1.1	0.14	ug/L	1
bis(2-Chloroethoxy)methane	111-91-1	8270D	ND		1.1	0.14	ug/L	1
bis(2-Chloroethyl)ether	111-44-4	8270D	ND		1.1	0.14	ug/L	1
bis(2-Chloroisopropyl)ether	108-60-1	8270D	ND		1.1	0.084	ug/L	1
2-Chloronaphthalene	91-58-7	8270D	ND		1.1	0.13	ug/L	1
2-Chlorophenol	95-57-8	8270D	ND		1.1	0.14	ug/L	1
4-Chlorophenyl phenyl ether	7005-72-3	8270D	ND		1.1	0.12	ug/L	1
Chrysene	218-01-9	8270D	ND		1.1	0.13	ug/L	1
Dibenzo(a,h)anthracene	53-70-3	8270D	ND		1.1	0.14	ug/L	1
Dibenzofuran	132-64-9	8270D	ND		1.1	0.17	ug/L	1
3,3'-Dichlorobenzidine	91-94-1	8270D	ND		5.3	0.85	ug/L	1
2,4-Dichlorophenol	120-83-2	8270D	ND		1.1	0.16	ug/L	1
Diethylphthalate	84-66-2	8270D	ND		5.3	1.8	ug/L	1
Dimethyl phthalate	131-11-3	8270D	ND		5.3	1.8	ug/L	1
2,4-Dimethylphenol	105-67-9	8270D	ND		1.1	0.33	ug/L	1
Di-n-butyl phthalate	84-74-2	8270D	ND		5.3	1.8	ug/L	1
4,6-Dinitro-2-methylphenol	534-52-1	8270D	ND		5.3	1.6	ug/L	1
2,4-Dinitrophenol	51-28-5	8270D	ND		5.3	0.26	ug/L	1
2,4-Dinitrotoluene	121-14-2	8270D	ND		2.1	0.47	ug/L	1
2,6-Dinitrotoluene	606-20-2	8270D	ND		2.1	0.42	ug/L	1
Di-n-octylphthalate	117-84-0	8270D	ND		5.3	1.8	ug/L	1
bis(2-Ethylhexyl)phthalate	117-81-7	8270D	ND		5.3	1.8	ug/L	1
Fluoranthene	206-44-0	8270D	ND		1.1	0.22	ug/L	1
Fluorene	86-73-7	8270D	ND		1.1	0.11	ug/L	1
Hexachlorobenzene	118-74-1	8270D	ND		1.1	0.22	ug/L	1
Hexachlorobutadiene	87-68-3	8270D	ND		1.1	0.095	ug/L	1
Hexachlorocyclopentadiene	77-47-4	8270D	ND		5.3	0.24	ug/L	1

PQL = Practical quantitation limit
B = Detected in the method blank
E = Quantitation of compound exceeded the calibration range
ND = Not detected at or above the MDL
J = Estimated result < PQL and ≥ MDL
P = The RPD between two GC columns exceeds 40%
Where applicable, all soil sample analysis are reported on a dry weight basis unless flagged with a "W"
N = Recovery is out of criteria
H = Out of holding time

Semivolatile Organic Compounds by GC/MS

Client: ARCADIS U.S., Inc.
Laboratory ID: LD01022-011
Description: F39TW03 (30-35)
Matrix: Aqueous
Date Sampled: 03/31/2010 1446
Date Received: 04/01/2010

Run	Prep Method	Analytical Method	Dilution	Analysis Date	Analyst	Prep Date	Batch
1	3520C	8270D	1	04/06/2010 1804	WD	04/02/2010 2357	30843

Parameter	CAS Number	Analytical Method	Result	Q	PQL	MDL	Units	Run
Hexachloroethane	67-72-1	8270D	ND		1.1	0.12	ug/L	1
Indeno(1,2,3-c,d)pyrene	193-39-5	8270D	ND		1.1	0.24	ug/L	1
Isophorone	78-59-1	8270D	ND		1.1	0.084	ug/L	1
2-Methylnaphthalene	91-57-6	8270D	ND		1.1	0.084	ug/L	1
2-Methylphenol	95-48-7	8270D	ND		1.1	0.18	ug/L	1
3 & 4-Methylphenol	106-44-5	8270D	ND		2.1	0.60	ug/L	1
Naphthalene	91-20-3	8270D	ND		1.1	0.074	ug/L	1
2-Nitroaniline	88-74-4	8270D	ND		2.1	0.58	ug/L	1
3-Nitroaniline	99-09-2	8270D	ND		2.1	0.81	ug/L	1
4-Nitroaniline	100-01-6	8270D	ND		2.1	0.41	ug/L	1
Nitrobenzene	98-95-3	8270D	ND		1.1	0.11	ug/L	1
2-Nitrophenol	88-75-5	8270D	ND		2.1	0.28	ug/L	1
4-Nitrophenol	100-02-7	8270D	ND		5.3	0.67	ug/L	1
N-Nitrosodi-n-propylamine	621-64-7	8270D	ND		1.1	0.084	ug/L	1
N-Nitrosodiphenylamine (Diphenylamine)	86-30-6	8270D	ND		1.1	0.40	ug/L	1
Pentachlorophenol	87-86-5	8270D	ND		5.3	0.57	ug/L	1
Phenanthrene	85-01-8	8270D	ND		1.1	0.19	ug/L	1
Phenol	108-95-2	8270D	ND		1.1	0.12	ug/L	1
Pyrene	129-00-0	8270D	ND		1.1	0.17	ug/L	1
2,4,5-Trichlorophenol	95-95-4	8270D	ND		1.1	0.19	ug/L	1
2,4,6-Trichlorophenol	88-06-2	8270D	ND		1.1	0.23	ug/L	1

Surrogate	Q	Run 1 % Recovery	Acceptance Limits
2-Fluorobiphenyl		83	37-129
2-Fluorophenol		82	24-127
Nitrobenzene-d5		84	38-127
Phenol-d5		75	28-128
Terphenyl-d14		72	10-148
2,4,6-Tribromophenol		105	41-144

PQL = Practical quantitation limit
B = Detected in the method blank
E = Quantitation of compound exceeded the calibration range
ND = Not detected at or above the MDL
J = Estimated result < PQL and ≥ MDL
P = The RPD between two GC columns exceeds 40%
Where applicable, all soil sample analysis are reported on a dry weight basis unless flagged with a "W"
N = Recovery is out of criteria
H = Out of holding time

Volatile Organic Compounds by GC/MS

Client: ARCADIS U.S., Inc.
Laboratory ID: LD01022-012
Description: F39TW03 (20-25)
Matrix: Aqueous
Date Sampled: 03/31/2010 1500
Date Received: 04/01/2010

Run	Prep Method	Analytical Method	Dilution	Analysis Date	Analyst	Prep Date	Batch
1	5030B	8260B	1	04/03/2010 0503	RRH		30893

Parameter	CAS Number	Analytical Method	Result	Q	PQL	MDL	Units	Run
Acetone	67-64-1	8260B	3.4	J	10	0.061	ug/L	1
Benzene	71-43-2	8260B	ND		0.50	0.027	ug/L	1
Bromodichloromethane	75-27-4	8260B	ND		0.50	0.17	ug/L	1
Bromoform	75-25-2	8260B	ND		0.50	0.010	ug/L	1
Bromomethane (Methyl bromide)	74-83-9	8260B	ND		0.50	0.20	ug/L	1
2-Butanone (MEK)	78-93-3	8260B	ND		10	2.0	ug/L	1
Carbon disulfide	75-15-0	8260B	0.14	J	0.50	0.097	ug/L	1
Carbon tetrachloride	56-23-5	8260B	ND		0.50	0.085	ug/L	1
Chlorobenzene	108-90-7	8260B	ND		0.50	0.17	ug/L	1
Chloroethane	75-00-3	8260B	ND		0.50	0.17	ug/L	1
Chloroform	67-66-3	8260B	ND		0.50	0.17	ug/L	1
Chloromethane (Methyl chloride)	74-87-3	8260B	ND		0.50	0.17	ug/L	1
Cyclohexane	110-82-7	8260B	ND		0.50	0.30	ug/L	1
1,2-Dibromo-3-chloropropane (DBCP)	96-12-8	8260B	ND		0.50	0.069	ug/L	1
Dibromochloromethane	124-48-1	8260B	ND		0.50	0.17	ug/L	1
1,2-Dibromoethane (EDB)	106-93-4	8260B	ND		0.50	0.061	ug/L	1
1,3-Dichlorobenzene	541-73-1	8260B	ND		0.50	0.17	ug/L	1
1,2-Dichlorobenzene	95-50-1	8260B	ND		0.50	0.17	ug/L	1
1,4-Dichlorobenzene	106-46-7	8260B	ND		0.50	0.17	ug/L	1
Dichlorodifluoromethane	75-71-8	8260B	ND		0.50	0.071	ug/L	1
1,1-Dichloroethane	75-34-3	8260B	0.82		0.50	0.054	ug/L	1
1,2-Dichloroethane	107-06-2	8260B	ND		0.50	0.023	ug/L	1
trans-1,2-Dichloroethene	156-60-5	8260B	0.28	J	0.50	0.079	ug/L	1
1,1-Dichloroethene	75-35-4	8260B	1.7		0.50	0.094	ug/L	1
cis-1,2-Dichloroethene	156-59-2	8260B	3.9		0.50	0.087	ug/L	1
1,2-Dichloropropane	78-87-5	8260B	ND		0.50	0.081	ug/L	1
trans-1,3-Dichloropropene	10061-02-6	8260B	ND		0.50	0.18	ug/L	1
cis-1,3-Dichloropropene	10061-01-5	8260B	ND		0.50	0.090	ug/L	1
Ethylbenzene	100-41-4	8260B	ND		0.50	0.17	ug/L	1
2-Hexanone	591-78-6	8260B	ND		10	0.27	ug/L	1
Isopropylbenzene	98-82-8	8260B	ND		0.50	0.029	ug/L	1
Methyl acetate	79-20-9	8260B	ND		1.0	0.30	ug/L	1
Methyl tertiary butyl ether (MTBE)	1634-04-4	8260B	ND		0.50	0.019	ug/L	1
4-Methyl-2-pentanone	108-10-1	8260B	ND		10	0.31	ug/L	1
Methylcyclohexane	108-87-2	8260B	ND		5.0	0.95	ug/L	1
Methylene chloride	75-09-2	8260B	0.17	BJ	0.50	0.17	ug/L	1
Styrene	100-42-5	8260B	ND		0.50	0.015	ug/L	1
1,1,2,2-Tetrachloroethane	79-34-5	8260B	ND		0.50	0.013	ug/L	1
Tetrachloroethene	127-18-4	8260B	ND		0.50	0.014	ug/L	1
Toluene	108-88-3	8260B	ND		0.50	0.17	ug/L	1
1,1,2-Trichloro-1,2,2-Trifluoroethane	76-13-1	8260B	ND		0.50	0.30	ug/L	1
1,2,4-Trichlorobenzene	120-82-1	8260B	ND		0.50	0.17	ug/L	1
1,1,1-Trichloroethane	71-55-6	8260B	ND		0.50	0.029	ug/L	1
1,1,2-Trichloroethane	79-00-5	8260B	ND		0.50	0.031	ug/L	1

PQL = Practical quantitation limit
B = Detected in the method blank
E = Quantitation of compound exceeded the calibration range
ND = Not detected at or above the MDL
J = Estimated result < PQL and ≥ MDL
P = The RPD between two GC columns exceeds 40%
Where applicable, all soil sample analysis are reported on a dry weight basis unless flagged with a "W"
N = Recovery is out of criteria
H = Out of holding time

Volatile Organic Compounds by GC/MS

Client: ARCADIS U.S., Inc.
Laboratory ID: LD01022-012
Description: F39TW03 (20-25)
Matrix: Aqueous
Date Sampled: 03/31/2010 1500
Date Received: 04/01/2010

Run	Prep Method	Analytical Method	Dilution	Analysis Date	Analyst	Prep Date	Batch
1	5030B	8260B	1	04/03/2010 0503	RRH		30893

Parameter	CAS Number	Analytical Method	Result	Q	PQL	MDL	Units	Run
Trichloroethene	79-01-6	8260B	4.1		0.50	0.024	ug/L	1
Trichlorofluoromethane	75-69-4	8260B	ND		0.50	0.051	ug/L	1
Vinyl chloride	75-01-4	8260B	ND		0.50	0.065	ug/L	1
Xylenes (total)	1330-20-7	8260B	ND		0.50	0.17	ug/L	1

Surrogate	Q	Run 1 % Recovery	Acceptance Limits
1,2-Dichloroethane-d4		95	70-130
Bromofluorobenzene		96	70-130
Toluene-d8		101	70-130

PQL = Practical quantitation limit
B = Detected in the method blank
E = Quantitation of compound exceeded the calibration range
ND = Not detected at or above the MDL
J = Estimated result < PQL and ≥ MDL
P = The RPD between two GC columns exceeds 40%
Where applicable, all soil sample analysis are reported on a dry weight basis unless flagged with a "W"
N = Recovery is out of criteria
H = Out of holding time

Semivolatile Organic Compounds by GC/MS

Client: ARCADIS U.S., Inc.
Laboratory ID: LD01022-012
Description: F39TW03 (20-25)
Matrix: Aqueous
Date Sampled: 03/31/2010 1500
Date Received: 04/01/2010

Run	Prep Method	Analytical Method	Dilution	Analysis Date	Analyst	Prep Date	Batch
1	3520C	8270D	1	04/06/2010 1825	WD	04/02/2010 2357	30843

Parameter	CAS Number	Analytical Method	Result	Q	PQL	MDL	Units	Run
Acenaphthene	83-32-9	8270D	ND		1.1	0.095	ug/L	1
Acenaphthylene	208-96-8	8270D	ND		1.1	0.17	ug/L	1
Acetophenone	98-86-2	8270D	ND		1.1	0.34	ug/L	1
Anthracene	120-12-7	8270D	ND		1.1	0.14	ug/L	1
Atrazine	1912-24-9	8270D	ND		1.1	0.21	ug/L	1
Benzaldehyde	100-52-7	8270D	ND		5.3	1.1	ug/L	1
Benzo(a)anthracene	56-55-3	8270D	ND		1.1	0.16	ug/L	1
Benzo(a)pyrene	50-32-8	8270D	ND		1.1	0.17	ug/L	1
Benzo(b)fluoranthene	205-99-2	8270D	ND		1.1	0.21	ug/L	1
Benzo(g,h,i)perylene	191-24-2	8270D	ND		1.1	0.24	ug/L	1
Benzo(k)fluoranthene	207-08-9	8270D	ND		1.1	0.13	ug/L	1
1,1'-Biphenyl	92-52-4	8270D	ND		1.1	0.21	ug/L	1
4-Bromophenyl phenyl ether	101-55-3	8270D	ND		1.1	0.13	ug/L	1
Butyl benzyl phthalate	85-68-7	8270D	ND		5.3	1.8	ug/L	1
Caprolactam	105-60-2	8270D	ND		5.3	1.3	ug/L	1
Carbazole	86-74-8	8270D	ND		1.1	0.26	ug/L	1
4-Chloro-3-methyl phenol	59-50-7	8270D	ND		1.1	0.23	ug/L	1
4-Chloroaniline	106-47-8	8270D	ND		1.1	0.14	ug/L	1
bis(2-Chloroethoxy)methane	111-91-1	8270D	ND		1.1	0.14	ug/L	1
bis(2-Chloroethyl)ether	111-44-4	8270D	ND		1.1	0.14	ug/L	1
bis(2-Chloroisopropyl)ether	108-60-1	8270D	ND		1.1	0.084	ug/L	1
2-Chloronaphthalene	91-58-7	8270D	ND		1.1	0.13	ug/L	1
2-Chlorophenol	95-57-8	8270D	ND		1.1	0.14	ug/L	1
4-Chlorophenyl phenyl ether	7005-72-3	8270D	ND		1.1	0.12	ug/L	1
Chrysene	218-01-9	8270D	ND		1.1	0.13	ug/L	1
Dibenzo(a,h)anthracene	53-70-3	8270D	ND		1.1	0.14	ug/L	1
Dibenzofuran	132-64-9	8270D	ND		1.1	0.17	ug/L	1
3,3'-Dichlorobenzidine	91-94-1	8270D	ND		5.3	0.85	ug/L	1
2,4-Dichlorophenol	120-83-2	8270D	ND		1.1	0.16	ug/L	1
Diethylphthalate	84-66-2	8270D	ND		5.3	1.8	ug/L	1
Dimethyl phthalate	131-11-3	8270D	ND		5.3	1.8	ug/L	1
2,4-Dimethylphenol	105-67-9	8270D	ND		1.1	0.33	ug/L	1
Di-n-butyl phthalate	84-74-2	8270D	ND		5.3	1.8	ug/L	1
4,6-Dinitro-2-methylphenol	534-52-1	8270D	ND		5.3	1.6	ug/L	1
2,4-Dinitrophenol	51-28-5	8270D	ND		5.3	0.26	ug/L	1
2,4-Dinitrotoluene	121-14-2	8270D	ND		2.1	0.47	ug/L	1
2,6-Dinitrotoluene	606-20-2	8270D	ND		2.1	0.42	ug/L	1
Di-n-octylphthalate	117-84-0	8270D	ND		5.3	1.8	ug/L	1
bis(2-Ethylhexyl)phthalate	117-81-7	8270D	ND		5.3	1.8	ug/L	1
Fluoranthene	206-44-0	8270D	ND		1.1	0.22	ug/L	1
Fluorene	86-73-7	8270D	ND		1.1	0.11	ug/L	1
Hexachlorobenzene	118-74-1	8270D	ND		1.1	0.22	ug/L	1
Hexachlorobutadiene	87-68-3	8270D	ND		1.1	0.095	ug/L	1
Hexachlorocyclopentadiene	77-47-4	8270D	ND		5.3	0.24	ug/L	1

PQL = Practical quantitation limit
B = Detected in the method blank
E = Quantitation of compound exceeded the calibration range
ND = Not detected at or above the MDL
J = Estimated result < PQL and ≥ MDL
P = The RPD between two GC columns exceeds 40%
Where applicable, all soil sample analysis are reported on a dry weight basis unless flagged with a "W"
N = Recovery is out of criteria
H = Out of holding time

Semivolatile Organic Compounds by GC/MS

Client: ARCADIS U.S., Inc.
Laboratory ID: LD01022-012
Description: F39TW03 (20-25)
Matrix: Aqueous
Date Sampled: 03/31/2010 1500
Date Received: 04/01/2010

Run	Prep Method	Analytical Method	Dilution	Analysis Date	Analyst	Prep Date	Batch
1	3520C	8270D	1	04/06/2010 1825	WD	04/02/2010 2357	30843

Parameter	CAS Number	Analytical Method	Result	Q	PQL	MDL	Units	Run
Hexachloroethane	67-72-1	8270D	ND		1.1	0.12	ug/L	1
Indeno(1,2,3-c,d)pyrene	193-39-5	8270D	ND		1.1	0.24	ug/L	1
Isophorone	78-59-1	8270D	ND		1.1	0.084	ug/L	1
2-Methylnaphthalene	91-57-6	8270D	ND		1.1	0.084	ug/L	1
2-Methylphenol	95-48-7	8270D	ND		1.1	0.18	ug/L	1
3 & 4-Methylphenol	106-44-5	8270D	ND		2.1	0.60	ug/L	1
Naphthalene	91-20-3	8270D	ND		1.1	0.074	ug/L	1
2-Nitroaniline	88-74-4	8270D	ND		2.1	0.58	ug/L	1
3-Nitroaniline	99-09-2	8270D	ND		2.1	0.81	ug/L	1
4-Nitroaniline	100-01-6	8270D	ND		2.1	0.41	ug/L	1
Nitrobenzene	98-95-3	8270D	ND		1.1	0.11	ug/L	1
2-Nitrophenol	88-75-5	8270D	ND		2.1	0.28	ug/L	1
4-Nitrophenol	100-02-7	8270D	ND		5.3	0.67	ug/L	1
N-Nitrosodi-n-propylamine	621-64-7	8270D	ND		1.1	0.084	ug/L	1
N-Nitrosodiphenylamine (Diphenylamine)	86-30-6	8270D	ND		1.1	0.40	ug/L	1
Pentachlorophenol	87-86-5	8270D	ND		5.3	0.57	ug/L	1
Phenanthrene	85-01-8	8270D	ND		1.1	0.19	ug/L	1
Phenol	108-95-2	8270D	ND		1.1	0.12	ug/L	1
Pyrene	129-00-0	8270D	ND		1.1	0.17	ug/L	1
2,4,5-Trichlorophenol	95-95-4	8270D	ND		1.1	0.19	ug/L	1
2,4,6-Trichlorophenol	88-06-2	8270D	ND		1.1	0.23	ug/L	1

Surrogate	Q	Run 1 % Recovery	Acceptance Limits
2-Fluorobiphenyl		76	37-129
2-Fluorophenol		73	24-127
Nitrobenzene-d5		79	38-127
Phenol-d5		51	28-128
Terphenyl-d14		57	10-148
2,4,6-Tribromophenol		98	41-144

PQL = Practical quantitation limit
B = Detected in the method blank
E = Quantitation of compound exceeded the calibration range
ND = Not detected at or above the MDL
J = Estimated result < PQL and ≥ MDL
P = The RPD between two GC columns exceeds 40%
Where applicable, all soil sample analysis are reported on a dry weight basis unless flagged with a "W"
N = Recovery is out of criteria
H = Out of holding time

Volatile Organic Compounds by GC/MS

Client: ARCADIS U.S., Inc.
Laboratory ID: LD01022-013
Description: TRIP BLANK (033110)
Matrix: Aqueous
Date Sampled: 04/01/2010 0845
Date Received: 04/01/2010

Run	Prep Method	Analytical Method	Dilution	Analysis Date	Analyst	Prep Date	Batch
1	5030B	8260B	1	04/02/2010 0332	DLB		30818

Parameter	CAS Number	Analytical Method	Result	Q	PQL	MDL	Units	Run
Acetone	67-64-1	8260B	5.0	J	10	0.061	ug/L	1
Benzene	71-43-2	8260B	ND		0.50	0.027	ug/L	1
Bromodichloromethane	75-27-4	8260B	ND		0.50	0.17	ug/L	1
Bromoform	75-25-2	8260B	ND		0.50	0.010	ug/L	1
Bromomethane (Methyl bromide)	74-83-9	8260B	ND		0.50	0.20	ug/L	1
2-Butanone (MEK)	78-93-3	8260B	ND		10	2.0	ug/L	1
Carbon disulfide	75-15-0	8260B	0.19	J	0.50	0.097	ug/L	1
Carbon tetrachloride	56-23-5	8260B	ND		0.50	0.085	ug/L	1
Chlorobenzene	108-90-7	8260B	ND		0.50	0.17	ug/L	1
Chloroethane	75-00-3	8260B	ND		0.50	0.17	ug/L	1
Chloroform	67-66-3	8260B	ND		0.50	0.17	ug/L	1
Chloromethane (Methyl chloride)	74-87-3	8260B	ND		0.50	0.17	ug/L	1
Cyclohexane	110-82-7	8260B	ND		0.50	0.30	ug/L	1
1,2-Dibromo-3-chloropropane (DBCP)	96-12-8	8260B	ND		0.50	0.069	ug/L	1
Dibromochloromethane	124-48-1	8260B	ND		0.50	0.17	ug/L	1
1,2-Dibromoethane (EDB)	106-93-4	8260B	ND		0.50	0.061	ug/L	1
1,3-Dichlorobenzene	541-73-1	8260B	ND		0.50	0.17	ug/L	1
1,2-Dichlorobenzene	95-50-1	8260B	ND		0.50	0.17	ug/L	1
1,4-Dichlorobenzene	106-46-7	8260B	ND		0.50	0.17	ug/L	1
Dichlorodifluoromethane	75-71-8	8260B	ND		0.50	0.071	ug/L	1
1,1-Dichloroethane	75-34-3	8260B	ND		0.50	0.054	ug/L	1
1,2-Dichloroethane	107-06-2	8260B	ND		0.50	0.023	ug/L	1
trans-1,2-Dichloroethene	156-60-5	8260B	ND		0.50	0.079	ug/L	1
1,1-Dichloroethene	75-35-4	8260B	ND		0.50	0.094	ug/L	1
cis-1,2-Dichloroethene	156-59-2	8260B	ND		0.50	0.087	ug/L	1
1,2-Dichloropropane	78-87-5	8260B	ND		0.50	0.081	ug/L	1
trans-1,3-Dichloropropene	10061-02-6	8260B	ND		0.50	0.18	ug/L	1
cis-1,3-Dichloropropene	10061-01-5	8260B	ND		0.50	0.090	ug/L	1
Ethylbenzene	100-41-4	8260B	ND		0.50	0.17	ug/L	1
2-Hexanone	591-78-6	8260B	ND		10	0.27	ug/L	1
Isopropylbenzene	98-82-8	8260B	ND		0.50	0.029	ug/L	1
Methyl acetate	79-20-9	8260B	ND		1.0	0.30	ug/L	1
Methyl tertiary butyl ether (MTBE)	1634-04-4	8260B	ND		0.50	0.019	ug/L	1
4-Methyl-2-pentanone	108-10-1	8260B	ND		10	0.31	ug/L	1
Methylcyclohexane	108-87-2	8260B	ND		5.0	0.95	ug/L	1
Methylene chloride	75-09-2	8260B	ND		0.50	0.17	ug/L	1
Styrene	100-42-5	8260B	ND		0.50	0.015	ug/L	1
1,1,2,2-Tetrachloroethane	79-34-5	8260B	ND		0.50	0.013	ug/L	1
Tetrachloroethene	127-18-4	8260B	ND		0.50	0.014	ug/L	1
Toluene	108-88-3	8260B	ND		0.50	0.17	ug/L	1
1,1,2-Trichloro-1,2,2-Trifluoroethane	76-13-1	8260B	ND		0.50	0.30	ug/L	1
1,2,4-Trichlorobenzene	120-82-1	8260B	ND		0.50	0.17	ug/L	1
1,1,1-Trichloroethane	71-55-6	8260B	ND		0.50	0.029	ug/L	1
1,1,2-Trichloroethane	79-00-5	8260B	ND		0.50	0.031	ug/L	1

PQL = Practical quantitation limit
B = Detected in the method blank
E = Quantitation of compound exceeded the calibration range
ND = Not detected at or above the MDL
J = Estimated result < PQL and ≥ MDL
P = The RPD between two GC columns exceeds 40%
Where applicable, all soil sample analysis are reported on a dry weight basis unless flagged with a "W"
N = Recovery is out of criteria
H = Out of holding time

Volatile Organic Compounds by GC/MS

Client: ARCADIS U.S., Inc.
Laboratory ID: LD01022-013
Description: TRIP BLANK (033110)
Matrix: Aqueous
Date Sampled: 04/01/2010 0845
Date Received: 04/01/2010

Run	Prep Method	Analytical Method	Dilution	Analysis Date	Analyst	Prep Date	Batch
1	5030B	8260B	1	04/02/2010 0332	DLB		30818

Parameter	CAS Number	Analytical Method	Result	Q	PQL	MDL	Units	Run
Trichloroethene	79-01-6	8260B	ND		0.50	0.024	ug/L	1
Trichlorofluoromethane	75-69-4	8260B	ND		0.50	0.051	ug/L	1
Vinyl chloride	75-01-4	8260B	ND		0.50	0.065	ug/L	1
Xylenes (total)	1330-20-7	8260B	ND		0.50	0.17	ug/L	1

Surrogate	Q	Run 1 % Recovery	Acceptance Limits
1,2-Dichloroethane-d4		105	70-130
Bromofluorobenzene		98	70-130
Toluene-d8		102	70-130

PQL = Practical quantitation limit
B = Detected in the method blank
E = Quantitation of compound exceeded the calibration range
ND = Not detected at or above the MDL
J = Estimated result < PQL and ≥ MDL
P = The RPD between two GC columns exceeds 40%
Where applicable, all soil sample analysis are reported on a dry weight basis unless flagged with a "W"
N = Recovery is out of criteria
H = Out of holding time

Volatile Organic Compounds by GC/MS

Client: ARCADIS U.S., Inc.
Laboratory ID: LD01022-014
Description: F39TW04 (10-15)
Matrix: Aqueous
Date Sampled: 04/01/2010 0854
Date Received: 04/06/2010

Run	Prep Method	Analytical Method	Dilution	Analysis Date	Analyst	Prep Date	Batch
1	5030B	8260B	1	04/07/2010 1822	LBS		31061

Parameter	CAS Number	Analytical Method	Result	Q	PQL	MDL	Units	Run
Acetone	67-64-1	8260B	3.5	J	10	0.061	ug/L	1
Benzene	71-43-2	8260B	0.33	J	0.50	0.027	ug/L	1
Bromodichloromethane	75-27-4	8260B	ND		0.50	0.17	ug/L	1
Bromoform	75-25-2	8260B	ND		0.50	0.010	ug/L	1
Bromomethane (Methyl bromide)	74-83-9	8260B	ND		0.50	0.20	ug/L	1
2-Butanone (MEK)	78-93-3	8260B	ND		10	2.0	ug/L	1
Carbon disulfide	75-15-0	8260B	0.18	J	0.50	0.097	ug/L	1
Carbon tetrachloride	56-23-5	8260B	ND		0.50	0.085	ug/L	1
Chlorobenzene	108-90-7	8260B	ND		0.50	0.17	ug/L	1
Chloroethane	75-00-3	8260B	ND		0.50	0.17	ug/L	1
Chloroform	67-66-3	8260B	ND		0.50	0.17	ug/L	1
Chloromethane (Methyl chloride)	74-87-3	8260B	ND		0.50	0.17	ug/L	1
Cyclohexane	110-82-7	8260B	ND		0.50	0.30	ug/L	1
1,2-Dibromo-3-chloropropane (DBCP)	96-12-8	8260B	ND		0.50	0.069	ug/L	1
Dibromochloromethane	124-48-1	8260B	ND		0.50	0.17	ug/L	1
1,2-Dibromoethane (EDB)	106-93-4	8260B	ND		0.50	0.061	ug/L	1
1,3-Dichlorobenzene	541-73-1	8260B	ND		0.50	0.17	ug/L	1
1,2-Dichlorobenzene	95-50-1	8260B	ND		0.50	0.17	ug/L	1
1,4-Dichlorobenzene	106-46-7	8260B	ND		0.50	0.17	ug/L	1
Dichlorodifluoromethane	75-71-8	8260B	ND		0.50	0.071	ug/L	1
1,1-Dichloroethane	75-34-3	8260B	ND		0.50	0.054	ug/L	1
1,2-Dichloroethane	107-06-2	8260B	ND		0.50	0.023	ug/L	1
trans-1,2-Dichloroethene	156-60-5	8260B	0.58		0.50	0.079	ug/L	1
1,1-Dichloroethene	75-35-4	8260B	ND		0.50	0.094	ug/L	1
cis-1,2-Dichloroethene	156-59-2	8260B	2.2		0.50	0.087	ug/L	1
1,2-Dichloropropane	78-87-5	8260B	ND		0.50	0.081	ug/L	1
trans-1,3-Dichloropropene	10061-02-6	8260B	ND		0.50	0.18	ug/L	1
cis-1,3-Dichloropropene	10061-01-5	8260B	ND		0.50	0.090	ug/L	1
Ethylbenzene	100-41-4	8260B	ND		0.50	0.17	ug/L	1
2-Hexanone	591-78-6	8260B	ND		10	0.27	ug/L	1
Isopropylbenzene	98-82-8	8260B	ND		0.50	0.029	ug/L	1
Methyl acetate	79-20-9	8260B	ND		1.0	0.30	ug/L	1
Methyl tertiary butyl ether (MTBE)	1634-04-4	8260B	ND		0.50	0.019	ug/L	1
4-Methyl-2-pentanone	108-10-1	8260B	ND		10	0.31	ug/L	1
Methylcyclohexane	108-87-2	8260B	ND		5.0	0.95	ug/L	1
Methylene chloride	75-09-2	8260B	0.19	BJ	0.50	0.17	ug/L	1
Styrene	100-42-5	8260B	ND		0.50	0.015	ug/L	1
1,1,2,2-Tetrachloroethane	79-34-5	8260B	ND		0.50	0.013	ug/L	1
Tetrachloroethene	127-18-4	8260B	4.6		0.50	0.014	ug/L	1
Toluene	108-88-3	8260B	ND		0.50	0.17	ug/L	1
1,1,2-Trichloro-1,2,2-Trifluoroethane	76-13-1	8260B	ND		0.50	0.30	ug/L	1
1,2,4-Trichlorobenzene	120-82-1	8260B	ND		0.50	0.17	ug/L	1
1,1,1-Trichloroethane	71-55-6	8260B	ND		0.50	0.029	ug/L	1
1,1,2-Trichloroethane	79-00-5	8260B	ND		0.50	0.031	ug/L	1

PQL = Practical quantitation limit
B = Detected in the method blank
E = Quantitation of compound exceeded the calibration range
ND = Not detected at or above the MDL
J = Estimated result < PQL and ≥ MDL
P = The RPD between two GC columns exceeds 40%
Where applicable, all soil sample analysis are reported on a dry weight basis unless flagged with a "W"
N = Recovery is out of criteria
H = Out of holding time

Volatile Organic Compounds by GC/MS

Client: ARCADIS U.S., Inc.
Laboratory ID: LD01022-014
Description: F39TW04 (10-15)
Matrix: Aqueous
Date Sampled: 04/01/2010 0854
Date Received: 04/06/2010

Run	Prep Method	Analytical Method	Dilution	Analysis Date	Analyst	Prep Date	Batch
1	5030B	8260B	1	04/07/2010 1822	LBS		31061

Parameter	CAS Number	Analytical Method	Result	Q	PQL	MDL	Units	Run
Trichloroethene	79-01-6	8260B	14		0.50	0.024	ug/L	1
Trichlorofluoromethane	75-69-4	8260B	ND		0.50	0.051	ug/L	1
Vinyl chloride	75-01-4	8260B	ND		0.50	0.065	ug/L	1
Xylenes (total)	1330-20-7	8260B	ND		0.50	0.17	ug/L	1

Surrogate	Q	Run 1 % Recovery	Acceptance Limits
1,2-Dichloroethane-d4		99	70-130
Bromofluorobenzene		99	70-130
Toluene-d8		100	70-130

PQL = Practical quantitation limit
B = Detected in the method blank
E = Quantitation of compound exceeded the calibration range
ND = Not detected at or above the MDL
J = Estimated result < PQL and ≥ MDL
P = The RPD between two GC columns exceeds 40%
Where applicable, all soil sample analysis are reported on a dry weight basis unless flagged with a "W"
N = Recovery is out of criteria
H = Out of holding time

Semivolatile Organic Compounds by GC/MS

Client: ARCADIS U.S., Inc.
Laboratory ID: LD01022-014
Description: F39TW04 (10-15)
Matrix: Aqueous
Date Sampled: 04/01/2010 0854
Date Received: 04/06/2010

Run	Prep Method	Analytical Method	Dilution	Analysis Date	Analyst	Prep Date	Batch
1	3520C	8270D	1	04/09/2010 2004	DC	04/06/2010 1730	30949

Parameter	CAS Number	Analytical Method	Result	Q	PQL	MDL	Units	Run
Acenaphthene	83-32-9	8270D	ND		1.1	0.095	ug/L	1
Acenaphthylene	208-96-8	8270D	ND		1.1	0.17	ug/L	1
Acetophenone	98-86-2	8270D	ND		1.1	0.34	ug/L	1
Anthracene	120-12-7	8270D	ND		1.1	0.14	ug/L	1
Atrazine	1912-24-9	8270D	ND		1.1	0.21	ug/L	1
Benzaldehyde	100-52-7	8270D	ND		5.3	1.1	ug/L	1
Benzo(a)anthracene	56-55-3	8270D	ND		1.1	0.16	ug/L	1
Benzo(a)pyrene	50-32-8	8270D	ND		1.1	0.17	ug/L	1
Benzo(b)fluoranthene	205-99-2	8270D	ND		1.1	0.21	ug/L	1
Benzo(g,h,i)perylene	191-24-2	8270D	ND		1.1	0.24	ug/L	1
Benzo(k)fluoranthene	207-08-9	8270D	ND		1.1	0.13	ug/L	1
1,1'-Biphenyl	92-52-4	8270D	ND		1.1	0.21	ug/L	1
4-Bromophenyl phenyl ether	101-55-3	8270D	ND		1.1	0.13	ug/L	1
Butyl benzyl phthalate	85-68-7	8270D	ND		5.3	1.8	ug/L	1
Caprolactam	105-60-2	8270D	ND		5.3	1.3	ug/L	1
Carbazole	86-74-8	8270D	ND		1.1	0.26	ug/L	1
4-Chloro-3-methyl phenol	59-50-7	8270D	ND		1.1	0.23	ug/L	1
4-Chloroaniline	106-47-8	8270D	ND		1.1	0.14	ug/L	1
bis(2-Chloroethoxy)methane	111-91-1	8270D	ND		1.1	0.14	ug/L	1
bis(2-Chloroethyl)ether	111-44-4	8270D	ND		1.1	0.14	ug/L	1
bis(2-Chloroisopropyl)ether	108-60-1	8270D	ND		1.1	0.084	ug/L	1
2-Chloronaphthalene	91-58-7	8270D	ND		1.1	0.13	ug/L	1
2-Chlorophenol	95-57-8	8270D	ND		1.1	0.14	ug/L	1
4-Chlorophenyl phenyl ether	7005-72-3	8270D	ND		1.1	0.12	ug/L	1
Chrysene	218-01-9	8270D	ND		1.1	0.13	ug/L	1
Dibenzo(a,h)anthracene	53-70-3	8270D	ND		1.1	0.14	ug/L	1
Dibenzofuran	132-64-9	8270D	ND		1.1	0.17	ug/L	1
3,3'-Dichlorobenzidine	91-94-1	8270D	ND		5.3	0.85	ug/L	1
2,4-Dichlorophenol	120-83-2	8270D	ND		1.1	0.16	ug/L	1
Diethylphthalate	84-66-2	8270D	ND		5.3	1.8	ug/L	1
Dimethyl phthalate	131-11-3	8270D	ND		5.3	1.8	ug/L	1
2,4-Dimethylphenol	105-67-9	8270D	ND		1.1	0.33	ug/L	1
Di-n-butyl phthalate	84-74-2	8270D	ND		5.3	1.8	ug/L	1
4,6-Dinitro-2-methylphenol	534-52-1	8270D	ND		5.3	1.6	ug/L	1
2,4-Dinitrophenol	51-28-5	8270D	ND		5.3	0.26	ug/L	1
2,4-Dinitrotoluene	121-14-2	8270D	ND		2.1	0.47	ug/L	1
2,6-Dinitrotoluene	606-20-2	8270D	ND		2.1	0.42	ug/L	1
Di-n-octylphthalate	117-84-0	8270D	ND		5.3	1.8	ug/L	1
bis(2-Ethylhexyl)phthalate	117-81-7	8270D	ND		5.3	1.8	ug/L	1
Fluoranthene	206-44-0	8270D	ND		1.1	0.22	ug/L	1
Fluorene	86-73-7	8270D	ND		1.1	0.11	ug/L	1
Hexachlorobenzene	118-74-1	8270D	ND		1.1	0.22	ug/L	1
Hexachlorobutadiene	87-68-3	8270D	ND		1.1	0.095	ug/L	1
Hexachlorocyclopentadiene	77-47-4	8270D	ND		5.3	0.24	ug/L	1

PQL = Practical quantitation limit
B = Detected in the method blank
E = Quantitation of compound exceeded the calibration range
ND = Not detected at or above the MDL
J = Estimated result < PQL and ≥ MDL
P = The RPD between two GC columns exceeds 40%
Where applicable, all soil sample analysis are reported on a dry weight basis unless flagged with a "W"
N = Recovery is out of criteria
H = Out of holding time

Semivolatile Organic Compounds by GC/MS

Client: ARCADIS U.S., Inc.
Laboratory ID: LD01022-014
Description: F39TW04 (10-15)
Matrix: Aqueous
Date Sampled: 04/01/2010 0854
Date Received: 04/06/2010

Run	Prep Method	Analytical Method	Dilution	Analysis Date	Analyst	Prep Date	Batch
1	3520C	8270D	1	04/09/2010 2004	DC	04/06/2010 1730	30949

Parameter	CAS Number	Analytical Method	Result	Q	PQL	MDL	Units	Run
Hexachloroethane	67-72-1	8270D	ND		1.1	0.12	ug/L	1
Indeno(1,2,3-c,d)pyrene	193-39-5	8270D	ND		1.1	0.24	ug/L	1
Isophorone	78-59-1	8270D	ND		1.1	0.084	ug/L	1
2-Methylnaphthalene	91-57-6	8270D	ND		1.1	0.084	ug/L	1
2-Methylphenol	95-48-7	8270D	ND		1.1	0.18	ug/L	1
3 & 4-Methylphenol	106-44-5	8270D	ND		2.1	0.60	ug/L	1
Naphthalene	91-20-3	8270D	ND		1.1	0.074	ug/L	1
2-Nitroaniline	88-74-4	8270D	ND		2.1	0.58	ug/L	1
3-Nitroaniline	99-09-2	8270D	ND		2.1	0.81	ug/L	1
4-Nitroaniline	100-01-6	8270D	ND		2.1	0.41	ug/L	1
Nitrobenzene	98-95-3	8270D	ND		1.1	0.11	ug/L	1
2-Nitrophenol	88-75-5	8270D	ND		2.1	0.28	ug/L	1
4-Nitrophenol	100-02-7	8270D	ND		5.3	0.67	ug/L	1
N-Nitrosodi-n-propylamine	621-64-7	8270D	ND		1.1	0.084	ug/L	1
N-Nitrosodiphenylamine (Diphenylamine)	86-30-6	8270D	ND		1.1	0.40	ug/L	1
Pentachlorophenol	87-86-5	8270D	ND		5.3	0.57	ug/L	1
Phenanthrene	85-01-8	8270D	ND		1.1	0.19	ug/L	1
Phenol	108-95-2	8270D	ND		1.1	0.12	ug/L	1
Pyrene	129-00-0	8270D	ND		1.1	0.17	ug/L	1
2,4,5-Trichlorophenol	95-95-4	8270D	ND		1.1	0.19	ug/L	1
2,4,6-Trichlorophenol	88-06-2	8270D	ND		1.1	0.23	ug/L	1

Surrogate	Q	Run 1 % Recovery	Acceptance Limits
2-Fluorobiphenyl		65	37-129
2-Fluorophenol		66	24-127
Nitrobenzene-d5		68	38-127
Phenol-d5		66	28-128
Terphenyl-d14		67	10-148
2,4,6-Tribromophenol		76	41-144

PQL = Practical quantitation limit
B = Detected in the method blank
E = Quantitation of compound exceeded the calibration range
ND = Not detected at or above the MDL
J = Estimated result < PQL and ≥ MDL
P = The RPD between two GC columns exceeds 40%
Where applicable, all soil sample analysis are reported on a dry weight basis unless flagged with a "W"
N = Recovery is out of criteria
H = Out of holding time

Volatile Organic Compounds by GC/MS

Client: ARCADIS U.S., Inc.
Laboratory ID: LD01022-015
Description: F39TW04 (40-45)
Matrix: Aqueous
Date Sampled: 04/01/2010 0925
Date Received: 04/06/2010

Run	Prep Method	Analytical Method	Dilution	Analysis Date	Analyst	Prep Date	Batch
1	5030B	8260B	1	04/07/2010 1845	LBS		31061

Parameter	CAS Number	Analytical Method	Result	Q	PQL	MDL	Units	Run
Acetone	67-64-1	8260B	8.6	J	10	0.061	ug/L	1
Benzene	71-43-2	8260B	0.13	J	0.50	0.027	ug/L	1
Bromodichloromethane	75-27-4	8260B	ND		0.50	0.17	ug/L	1
Bromoform	75-25-2	8260B	ND		0.50	0.010	ug/L	1
Bromomethane (Methyl bromide)	74-83-9	8260B	ND		0.50	0.20	ug/L	1
2-Butanone (MEK)	78-93-3	8260B	ND		10	2.0	ug/L	1
Carbon disulfide	75-15-0	8260B	1.3		0.50	0.097	ug/L	1
Carbon tetrachloride	56-23-5	8260B	ND		0.50	0.085	ug/L	1
Chlorobenzene	108-90-7	8260B	ND		0.50	0.17	ug/L	1
Chloroethane	75-00-3	8260B	ND		0.50	0.17	ug/L	1
Chloroform	67-66-3	8260B	ND		0.50	0.17	ug/L	1
Chloromethane (Methyl chloride)	74-87-3	8260B	ND		0.50	0.17	ug/L	1
Cyclohexane	110-82-7	8260B	ND		0.50	0.30	ug/L	1
1,2-Dibromo-3-chloropropane (DBCP)	96-12-8	8260B	ND		0.50	0.069	ug/L	1
Dibromochloromethane	124-48-1	8260B	ND		0.50	0.17	ug/L	1
1,2-Dibromoethane (EDB)	106-93-4	8260B	ND		0.50	0.061	ug/L	1
1,3-Dichlorobenzene	541-73-1	8260B	ND		0.50	0.17	ug/L	1
1,2-Dichlorobenzene	95-50-1	8260B	ND		0.50	0.17	ug/L	1
1,4-Dichlorobenzene	106-46-7	8260B	ND		0.50	0.17	ug/L	1
Dichlorodifluoromethane	75-71-8	8260B	ND		0.50	0.071	ug/L	1
1,1-Dichloroethane	75-34-3	8260B	ND		0.50	0.054	ug/L	1
1,2-Dichloroethane	107-06-2	8260B	ND		0.50	0.023	ug/L	1
trans-1,2-Dichloroethene	156-60-5	8260B	ND		0.50	0.079	ug/L	1
1,1-Dichloroethene	75-35-4	8260B	ND		0.50	0.094	ug/L	1
cis-1,2-Dichloroethene	156-59-2	8260B	ND		0.50	0.087	ug/L	1
1,2-Dichloropropane	78-87-5	8260B	ND		0.50	0.081	ug/L	1
trans-1,3-Dichloropropene	10061-02-6	8260B	ND		0.50	0.18	ug/L	1
cis-1,3-Dichloropropene	10061-01-5	8260B	ND		0.50	0.090	ug/L	1
Ethylbenzene	100-41-4	8260B	ND		0.50	0.17	ug/L	1
2-Hexanone	591-78-6	8260B	0.27	J	10	0.27	ug/L	1
Isopropylbenzene	98-82-8	8260B	ND		0.50	0.029	ug/L	1
Methyl acetate	79-20-9	8260B	ND		1.0	0.30	ug/L	1
Methyl tertiary butyl ether (MTBE)	1634-04-4	8260B	ND		0.50	0.019	ug/L	1
4-Methyl-2-pentanone	108-10-1	8260B	ND		10	0.31	ug/L	1
Methylcyclohexane	108-87-2	8260B	ND		5.0	0.95	ug/L	1
Methylene chloride	75-09-2	8260B	0.20	BJ	0.50	0.17	ug/L	1
Styrene	100-42-5	8260B	ND		0.50	0.015	ug/L	1
1,1,2,2-Tetrachloroethane	79-34-5	8260B	ND		0.50	0.013	ug/L	1
Tetrachloroethene	127-18-4	8260B	ND		0.50	0.014	ug/L	1
Toluene	108-88-3	8260B	ND		0.50	0.17	ug/L	1
1,1,2-Trichloro-1,2,2-Trifluoroethane	76-13-1	8260B	ND		0.50	0.30	ug/L	1
1,2,4-Trichlorobenzene	120-82-1	8260B	ND		0.50	0.17	ug/L	1
1,1,1-Trichloroethane	71-55-6	8260B	ND		0.50	0.029	ug/L	1
1,1,2-Trichloroethane	79-00-5	8260B	ND		0.50	0.031	ug/L	1

PQL = Practical quantitation limit
B = Detected in the method blank
E = Quantitation of compound exceeded the calibration range
ND = Not detected at or above the MDL
J = Estimated result < PQL and ≥ MDL
P = The RPD between two GC columns exceeds 40%
Where applicable, all soil sample analysis are reported on a dry weight basis unless flagged with a "W"
N = Recovery is out of criteria
H = Out of holding time

Volatile Organic Compounds by GC/MS

Client: ARCADIS U.S., Inc.
Laboratory ID: LD01022-015
Description: F39TW04 (40-45)
Matrix: Aqueous
Date Sampled: 04/01/2010 0925
Date Received: 04/06/2010

Run	Prep Method	Analytical Method	Dilution	Analysis Date	Analyst	Prep Date	Batch
1	5030B	8260B	1	04/07/2010 1845	LBS		31061

Parameter	CAS Number	Analytical Method	Result	Q	PQL	MDL	Units	Run
Trichloroethene	79-01-6	8260B	ND		0.50	0.024	ug/L	1
Trichlorofluoromethane	75-69-4	8260B	ND		0.50	0.051	ug/L	1
Vinyl chloride	75-01-4	8260B	ND		0.50	0.065	ug/L	1
Xylenes (total)	1330-20-7	8260B	ND		0.50	0.17	ug/L	1

Surrogate	Q	Run 1 % Recovery	Acceptance Limits
1,2-Dichloroethane-d4		100	70-130
Bromofluorobenzene		98	70-130
Toluene-d8		101	70-130

PQL = Practical quantitation limit
B = Detected in the method blank
E = Quantitation of compound exceeded the calibration range
ND = Not detected at or above the MDL
J = Estimated result < PQL and ≥ MDL
P = The RPD between two GC columns exceeds 40%
Where applicable, all soil sample analysis are reported on a dry weight basis unless flagged with a "W"
N = Recovery is out of criteria
H = Out of holding time

Semivolatile Organic Compounds by GC/MS

Client: ARCADIS U.S., Inc.
Laboratory ID: LD01022-015
Description: F39TW04 (40-45)
Matrix: Aqueous
Date Sampled: 04/01/2010 0925
Date Received: 04/06/2010

Run	Prep Method	Analytical Method	Dilution	Analysis Date	Analyst	Prep Date	Batch
1	3520C	8270D	1	04/09/2010 2023	DC	04/06/2010 1730	30949

Parameter	CAS Number	Analytical Method	Result	Q	PQL	MDL	Units	Run
Acenaphthene	83-32-9	8270D	ND		1.4	0.13	ug/L	1
Acenaphthylene	208-96-8	8270D	ND		1.4	0.23	ug/L	1
Acetophenone	98-86-2	8270D	ND		1.4	0.46	ug/L	1
Anthracene	120-12-7	8270D	ND		1.4	0.19	ug/L	1
Atrazine	1912-24-9	8270D	ND		1.4	0.29	ug/L	1
Benzaldehyde	100-52-7	8270D	ND		7.1	1.4	ug/L	1
Benzo(a)anthracene	56-55-3	8270D	ND		1.4	0.21	ug/L	1
Benzo(a)pyrene	50-32-8	8270D	ND		1.4	0.23	ug/L	1
Benzo(b)fluoranthene	205-99-2	8270D	ND		1.4	0.29	ug/L	1
Benzo(g,h,i)perylene	191-24-2	8270D	ND		1.4	0.33	ug/L	1
Benzo(k)fluoranthene	207-08-9	8270D	ND		1.4	0.17	ug/L	1
1,1'-Biphenyl	92-52-4	8270D	ND		1.4	0.29	ug/L	1
4-Bromophenyl phenyl ether	101-55-3	8270D	ND		1.4	0.17	ug/L	1
Butyl benzyl phthalate	85-68-7	8270D	ND		7.1	2.4	ug/L	1
Caprolactam	105-60-2	8270D	14		7.1	1.7	ug/L	1
Carbazole	86-74-8	8270D	ND		1.4	0.36	ug/L	1
4-Chloro-3-methyl phenol	59-50-7	8270D	ND		1.4	0.31	ug/L	1
4-Chloroaniline	106-47-8	8270D	ND		1.4	0.19	ug/L	1
bis(2-Chloroethoxy)methane	111-91-1	8270D	ND		1.4	0.19	ug/L	1
bis(2-Chloroethyl)ether	111-44-4	8270D	ND		1.4	0.19	ug/L	1
bis(2-Chloroisopropyl)ether	108-60-1	8270D	ND		1.4	0.11	ug/L	1
2-Chloronaphthalene	91-58-7	8270D	ND		1.4	0.17	ug/L	1
2-Chlorophenol	95-57-8	8270D	ND		1.4	0.19	ug/L	1
4-Chlorophenyl phenyl ether	7005-72-3	8270D	ND		1.4	0.16	ug/L	1
Chrysene	218-01-9	8270D	ND		1.4	0.17	ug/L	1
Dibenzo(a,h)anthracene	53-70-3	8270D	ND		1.4	0.19	ug/L	1
Dibenzofuran	132-64-9	8270D	ND		1.4	0.23	ug/L	1
3,3'-Dichlorobenzidine	91-94-1	8270D	ND		7.1	1.2	ug/L	1
2,4-Dichlorophenol	120-83-2	8270D	ND		1.4	0.21	ug/L	1
Diethylphthalate	84-66-2	8270D	ND		7.1	2.4	ug/L	1
Dimethyl phthalate	131-11-3	8270D	ND		7.1	2.4	ug/L	1
2,4-Dimethylphenol	105-67-9	8270D	ND		1.4	0.44	ug/L	1
Di-n-butyl phthalate	84-74-2	8270D	ND		7.1	2.4	ug/L	1
4,6-Dinitro-2-methylphenol	534-52-1	8270D	ND		7.1	2.1	ug/L	1
2,4-Dinitrophenol	51-28-5	8270D	ND		7.1	0.36	ug/L	1
2,4-Dinitrotoluene	121-14-2	8270D	ND		2.9	0.64	ug/L	1
2,6-Dinitrotoluene	606-20-2	8270D	ND		2.9	0.57	ug/L	1
Di-n-octylphthalate	117-84-0	8270D	ND		7.1	2.4	ug/L	1
bis(2-Ethylhexyl)phthalate	117-81-7	8270D	ND		7.1	2.4	ug/L	1
Fluoranthene	206-44-0	8270D	ND		1.4	0.30	ug/L	1
Fluorene	86-73-7	8270D	ND		1.4	0.14	ug/L	1
Hexachlorobenzene	118-74-1	8270D	ND		1.4	0.30	ug/L	1
Hexachlorobutadiene	87-68-3	8270D	ND		1.4	0.13	ug/L	1
Hexachlorocyclopentadiene	77-47-4	8270D	ND		7.1	0.33	ug/L	1

PQL = Practical quantitation limit
B = Detected in the method blank
E = Quantitation of compound exceeded the calibration range
ND = Not detected at or above the MDL
J = Estimated result < PQL and ≥ MDL
P = The RPD between two GC columns exceeds 40%
Where applicable, all soil sample analysis are reported on a dry weight basis unless flagged with a "W"
N = Recovery is out of criteria
H = Out of holding time

Semivolatile Organic Compounds by GC/MS

Client: ARCADIS U.S., Inc.
Laboratory ID: LD01022-015
Description: F39TW04 (40-45)
Matrix: Aqueous
Date Sampled: 04/01/2010 0925
Date Received: 04/06/2010

Run	Prep Method	Analytical Method	Dilution	Analysis Date	Analyst	Prep Date	Batch
1	3520C	8270D	1	04/09/2010 2023	DC	04/06/2010 1730	30949

Parameter	CAS Number	Analytical Method	Result	Q	PQL	MDL	Units	Run
Hexachloroethane	67-72-1	8270D	ND		1.4	0.16	ug/L	1
Indeno(1,2,3-c,d)pyrene	193-39-5	8270D	ND		1.4	0.33	ug/L	1
Isophorone	78-59-1	8270D	ND		1.4	0.11	ug/L	1
2-Methylnaphthalene	91-57-6	8270D	ND		1.4	0.11	ug/L	1
2-Methylphenol	95-48-7	8270D	ND		1.4	0.24	ug/L	1
3 & 4-Methylphenol	106-44-5	8270D	ND		2.9	0.81	ug/L	1
Naphthalene	91-20-3	8270D	ND		1.4	0.10	ug/L	1
2-Nitroaniline	88-74-4	8270D	ND		2.9	0.79	ug/L	1
3-Nitroaniline	99-09-2	8270D	ND		2.9	1.1	ug/L	1
4-Nitroaniline	100-01-6	8270D	ND		2.9	0.56	ug/L	1
Nitrobenzene	98-95-3	8270D	ND		1.4	0.14	ug/L	1
2-Nitrophenol	88-75-5	8270D	ND		2.9	0.39	ug/L	1
4-Nitrophenol	100-02-7	8270D	ND		7.1	0.91	ug/L	1
N-Nitrosodi-n-propylamine	621-64-7	8270D	ND		1.4	0.11	ug/L	1
N-Nitrosodiphenylamine (Diphenylamine)	86-30-6	8270D	ND		1.4	0.54	ug/L	1
Pentachlorophenol	87-86-5	8270D	ND		7.1	0.77	ug/L	1
Phenanthrene	85-01-8	8270D	ND		1.4	0.26	ug/L	1
Phenol	108-95-2	8270D	ND		1.4	0.16	ug/L	1
Pyrene	129-00-0	8270D	ND		1.4	0.23	ug/L	1
2,4,5-Trichlorophenol	95-95-4	8270D	ND		1.4	0.26	ug/L	1
2,4,6-Trichlorophenol	88-06-2	8270D	ND		1.4	0.31	ug/L	1

Surrogate	Q	Run 1 % Recovery	Acceptance Limits
2-Fluorobiphenyl		59	37-129
2-Fluorophenol		62	24-127
Nitrobenzene-d5		63	38-127
Phenol-d5		66	28-128
Terphenyl-d14		27	10-148
2,4,6-Tribromophenol		71	41-144

PQL = Practical quantitation limit
B = Detected in the method blank
E = Quantitation of compound exceeded the calibration range
ND = Not detected at or above the MDL
J = Estimated result < PQL and ≥ MDL
P = The RPD between two GC columns exceeds 40%
Where applicable, all soil sample analysis are reported on a dry weight basis unless flagged with a "W"
N = Recovery is out of criteria
H = Out of holding time

Volatile Organic Compounds by GC/MS

Client: ARCADIS U.S., Inc.
Laboratory ID: LD01022-016
Description: F39TW04 (30-35)
Matrix: Aqueous
Date Sampled: 04/01/2010 1517
Date Received: 04/06/2010

Run	Prep Method	Analytical Method	Dilution	Analysis Date	Analyst	Prep Date	Batch
1	5030B	8260B	1	04/07/2010 1908	LBS		31061

Parameter	CAS Number	Analytical Method	Result	Q	PQL	MDL	Units	Run
Acetone	67-64-1	8260B	5.8	J	10	0.061	ug/L	1
Benzene	71-43-2	8260B	0.92		0.50	0.027	ug/L	1
Bromodichloromethane	75-27-4	8260B	ND		0.50	0.17	ug/L	1
Bromoform	75-25-2	8260B	ND		0.50	0.010	ug/L	1
Bromomethane (Methyl bromide)	74-83-9	8260B	ND		0.50	0.20	ug/L	1
2-Butanone (MEK)	78-93-3	8260B	ND		10	2.0	ug/L	1
Carbon disulfide	75-15-0	8260B	0.80		0.50	0.097	ug/L	1
Carbon tetrachloride	56-23-5	8260B	ND		0.50	0.085	ug/L	1
Chlorobenzene	108-90-7	8260B	ND		0.50	0.17	ug/L	1
Chloroethane	75-00-3	8260B	ND		0.50	0.17	ug/L	1
Chloroform	67-66-3	8260B	ND		0.50	0.17	ug/L	1
Chloromethane (Methyl chloride)	74-87-3	8260B	ND		0.50	0.17	ug/L	1
Cyclohexane	110-82-7	8260B	ND		0.50	0.30	ug/L	1
1,2-Dibromo-3-chloropropane (DBCP)	96-12-8	8260B	ND		0.50	0.069	ug/L	1
Dibromochloromethane	124-48-1	8260B	ND		0.50	0.17	ug/L	1
1,2-Dibromoethane (EDB)	106-93-4	8260B	ND		0.50	0.061	ug/L	1
1,3-Dichlorobenzene	541-73-1	8260B	ND		0.50	0.17	ug/L	1
1,2-Dichlorobenzene	95-50-1	8260B	ND		0.50	0.17	ug/L	1
1,4-Dichlorobenzene	106-46-7	8260B	ND		0.50	0.17	ug/L	1
Dichlorodifluoromethane	75-71-8	8260B	ND		0.50	0.071	ug/L	1
1,1-Dichloroethane	75-34-3	8260B	ND		0.50	0.054	ug/L	1
1,2-Dichloroethane	107-06-2	8260B	ND		0.50	0.023	ug/L	1
trans-1,2-Dichloroethene	156-60-5	8260B	ND		0.50	0.079	ug/L	1
1,1-Dichloroethene	75-35-4	8260B	0.15	J	0.50	0.094	ug/L	1
cis-1,2-Dichloroethene	156-59-2	8260B	5.6		0.50	0.087	ug/L	1
1,2-Dichloropropane	78-87-5	8260B	ND		0.50	0.081	ug/L	1
trans-1,3-Dichloropropene	10061-02-6	8260B	ND		0.50	0.18	ug/L	1
cis-1,3-Dichloropropene	10061-01-5	8260B	ND		0.50	0.090	ug/L	1
Ethylbenzene	100-41-4	8260B	ND		0.50	0.17	ug/L	1
2-Hexanone	591-78-6	8260B	ND		10	0.27	ug/L	1
Isopropylbenzene	98-82-8	8260B	ND		0.50	0.029	ug/L	1
Methyl acetate	79-20-9	8260B	ND		1.0	0.30	ug/L	1
Methyl tertiary butyl ether (MTBE)	1634-04-4	8260B	ND		0.50	0.019	ug/L	1
4-Methyl-2-pentanone	108-10-1	8260B	ND		10	0.31	ug/L	1
Methylcyclohexane	108-87-2	8260B	ND		5.0	0.95	ug/L	1
Methylene chloride	75-09-2	8260B	0.17	BJ	0.50	0.17	ug/L	1
Styrene	100-42-5	8260B	ND		0.50	0.015	ug/L	1
1,1,2,2-Tetrachloroethane	79-34-5	8260B	ND		0.50	0.013	ug/L	1
Tetrachloroethene	127-18-4	8260B	55		0.50	0.014	ug/L	1
Toluene	108-88-3	8260B	ND		0.50	0.17	ug/L	1
1,1,2-Trichloro-1,2,2-Trifluoroethane	76-13-1	8260B	ND		0.50	0.30	ug/L	1
1,2,4-Trichlorobenzene	120-82-1	8260B	ND		0.50	0.17	ug/L	1
1,1,1-Trichloroethane	71-55-6	8260B	ND		0.50	0.029	ug/L	1
1,1,2-Trichloroethane	79-00-5	8260B	ND		0.50	0.031	ug/L	1

PQL = Practical quantitation limit
B = Detected in the method blank
E = Quantitation of compound exceeded the calibration range
ND = Not detected at or above the MDL
J = Estimated result < PQL and ≥ MDL
P = The RPD between two GC columns exceeds 40%
Where applicable, all soil sample analysis are reported on a dry weight basis unless flagged with a "W"
N = Recovery is out of criteria
H = Out of holding time

Volatile Organic Compounds by GC/MS

Client: ARCADIS U.S., Inc.
Laboratory ID: LD01022-016
Description: F39TW04 (30-35)
Matrix: Aqueous
Date Sampled: 04/01/2010 1517
Date Received: 04/06/2010

Run	Prep Method	Analytical Method	Dilution	Analysis Date	Analyst	Prep Date	Batch
1	5030B	8260B	1	04/07/2010 1908	LBS		31061

Parameter	CAS Number	Analytical Method	Result	Q	PQL	MDL	Units	Run
Trichloroethene	79-01-6	8260B	43		0.50	0.024	ug/L	1
Trichlorofluoromethane	75-69-4	8260B	ND		0.50	0.051	ug/L	1
Vinyl chloride	75-01-4	8260B	ND		0.50	0.065	ug/L	1
Xylenes (total)	1330-20-7	8260B	ND		0.50	0.17	ug/L	1

Surrogate	Q	Run 1 % Recovery	Acceptance Limits
1,2-Dichloroethane-d4		98	70-130
Bromofluorobenzene		97	70-130
Toluene-d8		102	70-130

PQL = Practical quantitation limit
B = Detected in the method blank
E = Quantitation of compound exceeded the calibration range
ND = Not detected at or above the MDL
J = Estimated result < PQL and ≥ MDL
P = The RPD between two GC columns exceeds 40%
Where applicable, all soil sample analysis are reported on a dry weight basis unless flagged with a "W"
N = Recovery is out of criteria
H = Out of holding time

Semivolatile Organic Compounds by GC/MS

Client: ARCADIS U.S., Inc.
Laboratory ID: LD01022-016
Description: F39TW04 (30-35)
Matrix: Aqueous
Date Sampled: 04/01/2010 1517
Date Received: 04/06/2010

Run	Prep Method	Analytical Method	Dilution	Analysis Date	Analyst	Prep Date	Batch
1	3520C	8270D	1	04/09/2010 2042	DC	04/06/2010 1730	30949

Parameter	CAS Number	Analytical Method	Result	Q	PQL	MDL	Units	Run
Acenaphthene	83-32-9	8270D	ND		1.1	0.095	ug/L	1
Acenaphthylene	208-96-8	8270D	ND		1.1	0.17	ug/L	1
Acetophenone	98-86-2	8270D	ND		1.1	0.34	ug/L	1
Anthracene	120-12-7	8270D	ND		1.1	0.14	ug/L	1
Atrazine	1912-24-9	8270D	ND		1.1	0.21	ug/L	1
Benzaldehyde	100-52-7	8270D	ND		5.3	1.1	ug/L	1
Benzo(a)anthracene	56-55-3	8270D	ND		1.1	0.16	ug/L	1
Benzo(a)pyrene	50-32-8	8270D	ND		1.1	0.17	ug/L	1
Benzo(b)fluoranthene	205-99-2	8270D	ND		1.1	0.21	ug/L	1
Benzo(g,h,i)perylene	191-24-2	8270D	ND		1.1	0.24	ug/L	1
Benzo(k)fluoranthene	207-08-9	8270D	ND		1.1	0.13	ug/L	1
1,1'-Biphenyl	92-52-4	8270D	ND		1.1	0.21	ug/L	1
4-Bromophenyl phenyl ether	101-55-3	8270D	ND		1.1	0.13	ug/L	1
Butyl benzyl phthalate	85-68-7	8270D	ND		5.3	1.8	ug/L	1
Caprolactam	105-60-2	8270D	ND		5.3	1.3	ug/L	1
Carbazole	86-74-8	8270D	ND		1.1	0.26	ug/L	1
4-Chloro-3-methyl phenol	59-50-7	8270D	ND		1.1	0.23	ug/L	1
4-Chloroaniline	106-47-8	8270D	ND		1.1	0.14	ug/L	1
bis(2-Chloroethoxy)methane	111-91-1	8270D	ND		1.1	0.14	ug/L	1
bis(2-Chloroethyl)ether	111-44-4	8270D	ND		1.1	0.14	ug/L	1
bis(2-Chloroisopropyl)ether	108-60-1	8270D	ND		1.1	0.084	ug/L	1
2-Chloronaphthalene	91-58-7	8270D	ND		1.1	0.13	ug/L	1
2-Chlorophenol	95-57-8	8270D	ND		1.1	0.14	ug/L	1
4-Chlorophenyl phenyl ether	7005-72-3	8270D	ND		1.1	0.12	ug/L	1
Chrysene	218-01-9	8270D	ND		1.1	0.13	ug/L	1
Dibenzo(a,h)anthracene	53-70-3	8270D	ND		1.1	0.14	ug/L	1
Dibenzofuran	132-64-9	8270D	ND		1.1	0.17	ug/L	1
3,3'-Dichlorobenzidine	91-94-1	8270D	ND		5.3	0.85	ug/L	1
2,4-Dichlorophenol	120-83-2	8270D	ND		1.1	0.16	ug/L	1
Diethylphthalate	84-66-2	8270D	ND		5.3	1.8	ug/L	1
Dimethyl phthalate	131-11-3	8270D	ND		5.3	1.8	ug/L	1
2,4-Dimethylphenol	105-67-9	8270D	ND		1.1	0.33	ug/L	1
Di-n-butyl phthalate	84-74-2	8270D	ND		5.3	1.8	ug/L	1
4,6-Dinitro-2-methylphenol	534-52-1	8270D	ND		5.3	1.6	ug/L	1
2,4-Dinitrophenol	51-28-5	8270D	ND		5.3	0.26	ug/L	1
2,4-Dinitrotoluene	121-14-2	8270D	ND		2.1	0.47	ug/L	1
2,6-Dinitrotoluene	606-20-2	8270D	ND		2.1	0.42	ug/L	1
Di-n-octylphthalate	117-84-0	8270D	ND		5.3	1.8	ug/L	1
bis(2-Ethylhexyl)phthalate	117-81-7	8270D	ND		5.3	1.8	ug/L	1
Fluoranthene	206-44-0	8270D	ND		1.1	0.22	ug/L	1
Fluorene	86-73-7	8270D	ND		1.1	0.11	ug/L	1
Hexachlorobenzene	118-74-1	8270D	ND		1.1	0.22	ug/L	1
Hexachlorobutadiene	87-68-3	8270D	ND		1.1	0.095	ug/L	1
Hexachlorocyclopentadiene	77-47-4	8270D	ND		5.3	0.24	ug/L	1

PQL = Practical quantitation limit
B = Detected in the method blank
E = Quantitation of compound exceeded the calibration range
ND = Not detected at or above the MDL
J = Estimated result < PQL and ≥ MDL
P = The RPD between two GC columns exceeds 40%
Where applicable, all soil sample analysis are reported on a dry weight basis unless flagged with a "W"
N = Recovery is out of criteria
H = Out of holding time

Semivolatile Organic Compounds by GC/MS

Client: ARCADIS U.S., Inc.
Laboratory ID: LD01022-016
Description: F39TW04 (30-35)
Matrix: Aqueous
Date Sampled: 04/01/2010 1517
Date Received: 04/06/2010

Run	Prep Method	Analytical Method	Dilution	Analysis Date	Analyst	Prep Date	Batch
1	3520C	8270D	1	04/09/2010 2042	DC	04/06/2010 1730	30949

Parameter	CAS Number	Analytical Method	Result	Q	PQL	MDL	Units	Run
Hexachloroethane	67-72-1	8270D	ND		1.1	0.12	ug/L	1
Indeno(1,2,3-c,d)pyrene	193-39-5	8270D	ND		1.1	0.24	ug/L	1
Isophorone	78-59-1	8270D	ND		1.1	0.084	ug/L	1
2-Methylnaphthalene	91-57-6	8270D	ND		1.1	0.084	ug/L	1
2-Methylphenol	95-48-7	8270D	ND		1.1	0.18	ug/L	1
3 & 4-Methylphenol	106-44-5	8270D	ND		2.1	0.60	ug/L	1
Naphthalene	91-20-3	8270D	ND		1.1	0.074	ug/L	1
2-Nitroaniline	88-74-4	8270D	ND		2.1	0.58	ug/L	1
3-Nitroaniline	99-09-2	8270D	ND		2.1	0.81	ug/L	1
4-Nitroaniline	100-01-6	8270D	ND		2.1	0.41	ug/L	1
Nitrobenzene	98-95-3	8270D	ND		1.1	0.11	ug/L	1
2-Nitrophenol	88-75-5	8270D	ND		2.1	0.28	ug/L	1
4-Nitrophenol	100-02-7	8270D	ND		5.3	0.67	ug/L	1
N-Nitrosodi-n-propylamine	621-64-7	8270D	ND		1.1	0.084	ug/L	1
N-Nitrosodiphenylamine (Diphenylamine)	86-30-6	8270D	ND		1.1	0.40	ug/L	1
Pentachlorophenol	87-86-5	8270D	ND		5.3	0.57	ug/L	1
Phenanthrene	85-01-8	8270D	ND		1.1	0.19	ug/L	1
Phenol	108-95-2	8270D	ND		1.1	0.12	ug/L	1
Pyrene	129-00-0	8270D	ND		1.1	0.17	ug/L	1
2,4,5-Trichlorophenol	95-95-4	8270D	ND		1.1	0.19	ug/L	1
2,4,6-Trichlorophenol	88-06-2	8270D	ND		1.1	0.23	ug/L	1

Surrogate	Q	Run 1 % Recovery	Acceptance Limits
2-Fluorobiphenyl		61	37-129
2-Fluorophenol		52	24-127
Nitrobenzene-d5		55	38-127
Phenol-d5		59	28-128
Terphenyl-d14		51	10-148
2,4,6-Tribromophenol		85	41-144

PQL = Practical quantitation limit
B = Detected in the method blank
E = Quantitation of compound exceeded the calibration range
ND = Not detected at or above the MDL
J = Estimated result < PQL and ≥ MDL
P = The RPD between two GC columns exceeds 40%
Where applicable, all soil sample analysis are reported on a dry weight basis unless flagged with a "W"
N = Recovery is out of criteria
H = Out of holding time

Volatile Organic Compounds by GC/MS

Client: ARCADIS U.S., Inc.
Laboratory ID: LD01022-017
Description: F39TW04 (20-25)
Matrix: Aqueous
Date Sampled: 04/01/2010 1533
Date Received: 04/06/2010

Run	Prep Method	Analytical Method	Dilution	Analysis Date	Analyst	Prep Date	Batch
1	5030B	8260B	1	04/07/2010 1932	LBS		31061

Parameter	CAS Number	Analytical Method	Result	Q	PQL	MDL	Units	Run
Acetone	67-64-1	8260B	4.3	J	10	0.061	ug/L	1
Benzene	71-43-2	8260B	0.39	J	0.50	0.027	ug/L	1
Bromodichloromethane	75-27-4	8260B	ND		0.50	0.17	ug/L	1
Bromoform	75-25-2	8260B	ND		0.50	0.010	ug/L	1
Bromomethane (Methyl bromide)	74-83-9	8260B	ND		0.50	0.20	ug/L	1
2-Butanone (MEK)	78-93-3	8260B	ND		10	2.0	ug/L	1
Carbon disulfide	75-15-0	8260B	0.40	J	0.50	0.097	ug/L	1
Carbon tetrachloride	56-23-5	8260B	ND		0.50	0.085	ug/L	1
Chlorobenzene	108-90-7	8260B	ND		0.50	0.17	ug/L	1
Chloroethane	75-00-3	8260B	ND		0.50	0.17	ug/L	1
Chloroform	67-66-3	8260B	ND		0.50	0.17	ug/L	1
Chloromethane (Methyl chloride)	74-87-3	8260B	ND		0.50	0.17	ug/L	1
Cyclohexane	110-82-7	8260B	ND		0.50	0.30	ug/L	1
1,2-Dibromo-3-chloropropane (DBCP)	96-12-8	8260B	ND		0.50	0.069	ug/L	1
Dibromochloromethane	124-48-1	8260B	ND		0.50	0.17	ug/L	1
1,2-Dibromoethane (EDB)	106-93-4	8260B	ND		0.50	0.061	ug/L	1
1,3-Dichlorobenzene	541-73-1	8260B	ND		0.50	0.17	ug/L	1
1,2-Dichlorobenzene	95-50-1	8260B	ND		0.50	0.17	ug/L	1
1,4-Dichlorobenzene	106-46-7	8260B	ND		0.50	0.17	ug/L	1
Dichlorodifluoromethane	75-71-8	8260B	ND		0.50	0.071	ug/L	1
1,1-Dichloroethane	75-34-3	8260B	ND		0.50	0.054	ug/L	1
1,2-Dichloroethane	107-06-2	8260B	ND		0.50	0.023	ug/L	1
trans-1,2-Dichloroethene	156-60-5	8260B	0.57		0.50	0.079	ug/L	1
1,1-Dichloroethene	75-35-4	8260B	ND		0.50	0.094	ug/L	1
cis-1,2-Dichloroethene	156-59-2	8260B	2.4		0.50	0.087	ug/L	1
1,2-Dichloropropane	78-87-5	8260B	ND		0.50	0.081	ug/L	1
trans-1,3-Dichloropropene	10061-02-6	8260B	ND		0.50	0.18	ug/L	1
cis-1,3-Dichloropropene	10061-01-5	8260B	ND		0.50	0.090	ug/L	1
Ethylbenzene	100-41-4	8260B	ND		0.50	0.17	ug/L	1
2-Hexanone	591-78-6	8260B	ND		10	0.27	ug/L	1
Isopropylbenzene	98-82-8	8260B	ND		0.50	0.029	ug/L	1
Methyl acetate	79-20-9	8260B	ND		1.0	0.30	ug/L	1
Methyl tertiary butyl ether (MTBE)	1634-04-4	8260B	ND		0.50	0.019	ug/L	1
4-Methyl-2-pentanone	108-10-1	8260B	ND		10	0.31	ug/L	1
Methylcyclohexane	108-87-2	8260B	ND		5.0	0.95	ug/L	1
Methylene chloride	75-09-2	8260B	0.17	BJ	0.50	0.17	ug/L	1
Styrene	100-42-5	8260B	ND		0.50	0.015	ug/L	1
1,1,2,2-Tetrachloroethane	79-34-5	8260B	ND		0.50	0.013	ug/L	1
Tetrachloroethene	127-18-4	8260B	6.8		0.50	0.014	ug/L	1
Toluene	108-88-3	8260B	ND		0.50	0.17	ug/L	1
1,1,2-Trichloro-1,2,2-Trifluoroethane	76-13-1	8260B	ND		0.50	0.30	ug/L	1
1,2,4-Trichlorobenzene	120-82-1	8260B	ND		0.50	0.17	ug/L	1
1,1,1-Trichloroethane	71-55-6	8260B	ND		0.50	0.029	ug/L	1
1,1,2-Trichloroethane	79-00-5	8260B	ND		0.50	0.031	ug/L	1

PQL = Practical quantitation limit
B = Detected in the method blank
E = Quantitation of compound exceeded the calibration range
ND = Not detected at or above the MDL
J = Estimated result < PQL and ≥ MDL
P = The RPD between two GC columns exceeds 40%
Where applicable, all soil sample analysis are reported on a dry weight basis unless flagged with a "W"
N = Recovery is out of criteria
H = Out of holding time

Volatile Organic Compounds by GC/MS

Client: ARCADIS U.S., Inc.
Laboratory ID: LD01022-017
Description: F39TW04 (20-25)
Matrix: Aqueous
Date Sampled: 04/01/2010 1533
Date Received: 04/06/2010

Run	Prep Method	Analytical Method	Dilution	Analysis Date	Analyst	Prep Date	Batch
1	5030B	8260B	1	04/07/2010 1932	LBS		31061

Parameter	CAS Number	Analytical Method	Result	Q	PQL	MDL	Units	Run
Trichloroethene	79-01-6	8260B	12		0.50	0.024	ug/L	1
Trichlorofluoromethane	75-69-4	8260B	ND		0.50	0.051	ug/L	1
Vinyl chloride	75-01-4	8260B	ND		0.50	0.065	ug/L	1
Xylenes (total)	1330-20-7	8260B	ND		0.50	0.17	ug/L	1

Surrogate	Q	Run 1 % Recovery	Acceptance Limits
1,2-Dichloroethane-d4		99	70-130
Bromofluorobenzene		98	70-130
Toluene-d8		101	70-130

PQL = Practical quantitation limit
B = Detected in the method blank
E = Quantitation of compound exceeded the calibration range
ND = Not detected at or above the MDL
J = Estimated result < PQL and ≥ MDL
P = The RPD between two GC columns exceeds 40%
Where applicable, all soil sample analysis are reported on a dry weight basis unless flagged with a "W"
N = Recovery is out of criteria
H = Out of holding time

Semivolatile Organic Compounds by GC/MS

Client: ARCADIS U.S., Inc.
Laboratory ID: LD01022-017
Description: F39TW04 (20-25)
Matrix: Aqueous
Date Sampled: 04/01/2010 1533
Date Received: 04/06/2010

Run	Prep Method	Analytical Method	Dilution	Analysis Date	Analyst	Prep Date	Batch
1	3520C	8270D	1	04/09/2010 2101	DC	04/06/2010 1730	30949

Parameter	CAS Number	Analytical Method	Result	Q	PQL	MDL	Units	Run
Acenaphthene	83-32-9	8270D	ND		1.0	0.092	ug/L	1
Acenaphthylene	208-96-8	8270D	ND		1.0	0.16	ug/L	1
Acetophenone	98-86-2	8270D	ND		1.0	0.33	ug/L	1
Anthracene	120-12-7	8270D	ND		1.0	0.13	ug/L	1
Atrazine	1912-24-9	8270D	ND		1.0	0.20	ug/L	1
Benzaldehyde	100-52-7	8270D	ND		5.1	1.0	ug/L	1
Benzo(a)anthracene	56-55-3	8270D	ND		1.0	0.15	ug/L	1
Benzo(a)pyrene	50-32-8	8270D	ND		1.0	0.16	ug/L	1
Benzo(b)fluoranthene	205-99-2	8270D	ND		1.0	0.20	ug/L	1
Benzo(g,h,i)perylene	191-24-2	8270D	ND		1.0	0.23	ug/L	1
Benzo(k)fluoranthene	207-08-9	8270D	ND		1.0	0.12	ug/L	1
1,1'-Biphenyl	92-52-4	8270D	ND		1.0	0.20	ug/L	1
4-Bromophenyl phenyl ether	101-55-3	8270D	ND		1.0	0.12	ug/L	1
Butyl benzyl phthalate	85-68-7	8270D	ND		5.1	1.7	ug/L	1
Caprolactam	105-60-2	8270D	ND		5.1	1.2	ug/L	1
Carbazole	86-74-8	8270D	ND		1.0	0.26	ug/L	1
4-Chloro-3-methyl phenol	59-50-7	8270D	ND		1.0	0.22	ug/L	1
4-Chloroaniline	106-47-8	8270D	ND		1.0	0.13	ug/L	1
bis(2-Chloroethoxy)methane	111-91-1	8270D	ND		1.0	0.13	ug/L	1
bis(2-Chloroethyl)ether	111-44-4	8270D	ND		1.0	0.13	ug/L	1
bis(2-Chloroisopropyl)ether	108-60-1	8270D	ND		1.0	0.082	ug/L	1
2-Chloronaphthalene	91-58-7	8270D	ND		1.0	0.12	ug/L	1
2-Chlorophenol	95-57-8	8270D	ND		1.0	0.13	ug/L	1
4-Chlorophenyl phenyl ether	7005-72-3	8270D	ND		1.0	0.11	ug/L	1
Chrysene	218-01-9	8270D	ND		1.0	0.12	ug/L	1
Dibenzo(a,h)anthracene	53-70-3	8270D	ND		1.0	0.13	ug/L	1
Dibenzofuran	132-64-9	8270D	ND		1.0	0.16	ug/L	1
3,3'-Dichlorobenzidine	91-94-1	8270D	ND		5.1	0.83	ug/L	1
2,4-Dichlorophenol	120-83-2	8270D	ND		1.0	0.15	ug/L	1
Diethylphthalate	84-66-2	8270D	ND		5.1	1.7	ug/L	1
Dimethyl phthalate	131-11-3	8270D	ND		5.1	1.7	ug/L	1
2,4-Dimethylphenol	105-67-9	8270D	ND		1.0	0.32	ug/L	1
Di-n-butyl phthalate	84-74-2	8270D	ND		5.1	1.7	ug/L	1
4,6-Dinitro-2-methylphenol	534-52-1	8270D	ND		5.1	1.5	ug/L	1
2,4-Dinitrophenol	51-28-5	8270D	ND		5.1	0.26	ug/L	1
2,4-Dinitrotoluene	121-14-2	8270D	ND		2.0	0.46	ug/L	1
2,6-Dinitrotoluene	606-20-2	8270D	ND		2.0	0.41	ug/L	1
Di-n-octylphthalate	117-84-0	8270D	ND		5.1	1.7	ug/L	1
bis(2-Ethylhexyl)phthalate	117-81-7	8270D	ND		5.1	1.7	ug/L	1
Fluoranthene	206-44-0	8270D	ND		1.0	0.21	ug/L	1
Fluorene	86-73-7	8270D	ND		1.0	0.10	ug/L	1
Hexachlorobenzene	118-74-1	8270D	ND		1.0	0.21	ug/L	1
Hexachlorobutadiene	87-68-3	8270D	ND		1.0	0.092	ug/L	1
Hexachlorocyclopentadiene	77-47-4	8270D	ND		5.1	0.23	ug/L	1

PQL = Practical quantitation limit
B = Detected in the method blank
E = Quantitation of compound exceeded the calibration range
ND = Not detected at or above the MDL
J = Estimated result < PQL and ≥ MDL
P = The RPD between two GC columns exceeds 40%
Where applicable, all soil sample analysis are reported on a dry weight basis unless flagged with a "W"
N = Recovery is out of criteria
H = Out of holding time

Semivolatile Organic Compounds by GC/MS

Client: ARCADIS U.S., Inc.
Laboratory ID: LD01022-017
Description: F39TW04 (20-25)
Matrix: Aqueous
Date Sampled: 04/01/2010 1533
Date Received: 04/06/2010

Run	Prep Method	Analytical Method	Dilution	Analysis Date	Analyst	Prep Date	Batch
1	3520C	8270D	1	04/09/2010 2101	DC	04/06/2010 1730	30949

Parameter	CAS Number	Analytical Method	Result	Q	PQL	MDL	Units	Run
Hexachloroethane	67-72-1	8270D	ND		1.0	0.11	ug/L	1
Indeno(1,2,3-c,d)pyrene	193-39-5	8270D	ND		1.0	0.23	ug/L	1
Isophorone	78-59-1	8270D	ND		1.0	0.082	ug/L	1
2-Methylnaphthalene	91-57-6	8270D	ND		1.0	0.082	ug/L	1
2-Methylphenol	95-48-7	8270D	ND		1.0	0.17	ug/L	1
3 & 4-Methylphenol	106-44-5	8270D	ND		2.0	0.58	ug/L	1
Naphthalene	91-20-3	8270D	ND		1.0	0.071	ug/L	1
2-Nitroaniline	88-74-4	8270D	ND		2.0	0.56	ug/L	1
3-Nitroaniline	99-09-2	8270D	ND		2.0	0.79	ug/L	1
4-Nitroaniline	100-01-6	8270D	ND		2.0	0.40	ug/L	1
Nitrobenzene	98-95-3	8270D	ND		1.0	0.10	ug/L	1
2-Nitrophenol	88-75-5	8270D	ND		2.0	0.28	ug/L	1
4-Nitrophenol	100-02-7	8270D	ND		5.1	0.65	ug/L	1
N-Nitrosodi-n-propylamine	621-64-7	8270D	ND		1.0	0.082	ug/L	1
N-Nitrosodiphenylamine (Diphenylamine)	86-30-6	8270D	ND		1.0	0.39	ug/L	1
Pentachlorophenol	87-86-5	8270D	ND		5.1	0.55	ug/L	1
Phenanthrene	85-01-8	8270D	ND		1.0	0.18	ug/L	1
Phenol	108-95-2	8270D	ND		1.0	0.11	ug/L	1
Pyrene	129-00-0	8270D	ND		1.0	0.16	ug/L	1
2,4,5-Trichlorophenol	95-95-4	8270D	ND		1.0	0.18	ug/L	1
2,4,6-Trichlorophenol	88-06-2	8270D	ND		1.0	0.22	ug/L	1

Surrogate	Q	Run 1 % Recovery	Acceptance Limits
2-Fluorobiphenyl		59	37-129
2-Fluorophenol		58	24-127
Nitrobenzene-d5		63	38-127
Phenol-d5		61	28-128
Terphenyl-d14		47	10-148
2,4,6-Tribromophenol		73	41-144

PQL = Practical quantitation limit
B = Detected in the method blank
E = Quantitation of compound exceeded the calibration range
ND = Not detected at or above the MDL
J = Estimated result < PQL and ≥ MDL
P = The RPD between two GC columns exceeds 40%
Where applicable, all soil sample analysis are reported on a dry weight basis unless flagged with a "W"
N = Recovery is out of criteria
H = Out of holding time

Volatile Organic Compounds by GC/MS

Client: ARCADIS U.S., Inc.
Laboratory ID: LD01022-018
Description: Trip Blank (040110)
Matrix: Aqueous
Date Sampled: 04/06/2010 0830
Date Received: 04/06/2010

Run	Prep Method	Analytical Method	Dilution	Analysis Date	Analyst	Prep Date	Batch
1	5030B	8260B	1	04/07/2010 1455	LBS		31061

Parameter	CAS Number	Analytical Method	Result	Q	PQL	MDL	Units	Run
Acetone	67-64-1	8260B	ND		10	0.061	ug/L	1
Benzene	71-43-2	8260B	ND		0.50	0.027	ug/L	1
Bromodichloromethane	75-27-4	8260B	ND		0.50	0.17	ug/L	1
Bromoform	75-25-2	8260B	ND		0.50	0.010	ug/L	1
Bromomethane (Methyl bromide)	74-83-9	8260B	ND		0.50	0.20	ug/L	1
2-Butanone (MEK)	78-93-3	8260B	ND		10	2.0	ug/L	1
Carbon disulfide	75-15-0	8260B	ND		0.50	0.097	ug/L	1
Carbon tetrachloride	56-23-5	8260B	ND		0.50	0.085	ug/L	1
Chlorobenzene	108-90-7	8260B	ND		0.50	0.17	ug/L	1
Chloroethane	75-00-3	8260B	ND		0.50	0.17	ug/L	1
Chloroform	67-66-3	8260B	ND		0.50	0.17	ug/L	1
Chloromethane (Methyl chloride)	74-87-3	8260B	ND		0.50	0.17	ug/L	1
Cyclohexane	110-82-7	8260B	ND		0.50	0.30	ug/L	1
1,2-Dibromo-3-chloropropane (DBCP)	96-12-8	8260B	ND		0.50	0.069	ug/L	1
Dibromochloromethane	124-48-1	8260B	ND		0.50	0.17	ug/L	1
1,2-Dibromoethane (EDB)	106-93-4	8260B	ND		0.50	0.061	ug/L	1
1,3-Dichlorobenzene	541-73-1	8260B	ND		0.50	0.17	ug/L	1
1,2-Dichlorobenzene	95-50-1	8260B	ND		0.50	0.17	ug/L	1
1,4-Dichlorobenzene	106-46-7	8260B	ND		0.50	0.17	ug/L	1
Dichlorodifluoromethane	75-71-8	8260B	ND		0.50	0.071	ug/L	1
1,1-Dichloroethane	75-34-3	8260B	ND		0.50	0.054	ug/L	1
1,2-Dichloroethane	107-06-2	8260B	ND		0.50	0.023	ug/L	1
trans-1,2-Dichloroethene	156-60-5	8260B	ND		0.50	0.079	ug/L	1
1,1-Dichloroethene	75-35-4	8260B	ND		0.50	0.094	ug/L	1
cis-1,2-Dichloroethene	156-59-2	8260B	ND		0.50	0.087	ug/L	1
1,2-Dichloropropane	78-87-5	8260B	ND		0.50	0.081	ug/L	1
trans-1,3-Dichloropropene	10061-02-6	8260B	ND		0.50	0.18	ug/L	1
cis-1,3-Dichloropropene	10061-01-5	8260B	ND		0.50	0.090	ug/L	1
Ethylbenzene	100-41-4	8260B	ND		0.50	0.17	ug/L	1
2-Hexanone	591-78-6	8260B	ND		10	0.27	ug/L	1
Isopropylbenzene	98-82-8	8260B	ND		0.50	0.029	ug/L	1
Methyl acetate	79-20-9	8260B	ND		1.0	0.30	ug/L	1
Methyl tertiary butyl ether (MTBE)	1634-04-4	8260B	ND		0.50	0.019	ug/L	1
4-Methyl-2-pentanone	108-10-1	8260B	ND		10	0.31	ug/L	1
Methylcyclohexane	108-87-2	8260B	ND		5.0	0.95	ug/L	1
Methylene chloride	75-09-2	8260B	0.20	BJ	0.50	0.17	ug/L	1
Styrene	100-42-5	8260B	ND		0.50	0.015	ug/L	1
1,1,2,2-Tetrachloroethane	79-34-5	8260B	ND		0.50	0.013	ug/L	1
Tetrachloroethene	127-18-4	8260B	ND		0.50	0.014	ug/L	1
Toluene	108-88-3	8260B	ND		0.50	0.17	ug/L	1
1,1,2-Trichloro-1,2,2-Trifluoroethane	76-13-1	8260B	ND		0.50	0.30	ug/L	1
1,2,4-Trichlorobenzene	120-82-1	8260B	ND		0.50	0.17	ug/L	1
1,1,1-Trichloroethane	71-55-6	8260B	ND		0.50	0.029	ug/L	1
1,1,2-Trichloroethane	79-00-5	8260B	ND		0.50	0.031	ug/L	1

PQL = Practical quantitation limit
B = Detected in the method blank
E = Quantitation of compound exceeded the calibration range
ND = Not detected at or above the MDL
J = Estimated result < PQL and ≥ MDL
P = The RPD between two GC columns exceeds 40%
Where applicable, all soil sample analysis are reported on a dry weight basis unless flagged with a "W"
N = Recovery is out of criteria
H = Out of holding time

Volatile Organic Compounds by GC/MS

Client: ARCADIS U.S., Inc.
Laboratory ID: LD01022-018
Description: Trip Blank (040110)
Matrix: Aqueous
Date Sampled: 04/06/2010 0830
Date Received: 04/06/2010

Run	Prep Method	Analytical Method	Dilution	Analysis Date	Analyst	Prep Date	Batch
1	5030B	8260B	1	04/07/2010 1455	LBS		31061

Parameter	CAS Number	Analytical Method	Result	Q	PQL	MDL	Units	Run
Trichloroethene	79-01-6	8260B	ND		0.50	0.024	ug/L	1
Trichlorofluoromethane	75-69-4	8260B	ND		0.50	0.051	ug/L	1
Vinyl chloride	75-01-4	8260B	ND		0.50	0.065	ug/L	1
Xylenes (total)	1330-20-7	8260B	ND		0.50	0.17	ug/L	1

Surrogate	Q	Run 1 % Recovery	Acceptance Limits
1,2-Dichloroethane-d4		99	70-130
Bromofluorobenzene		98	70-130
Toluene-d8		102	70-130

PQL = Practical quantitation limit
B = Detected in the method blank
E = Quantitation of compound exceeded the calibration range
ND = Not detected at or above the MDL
J = Estimated result < PQL and ≥ MDL
P = The RPD between two GC columns exceeds 40%
Where applicable, all soil sample analysis are reported on a dry weight basis unless flagged with a "W"
N = Recovery is out of criteria
H = Out of holding time

QC Summary

Volatile Organic Compounds by GC/MS - MB

Sample ID: LQ30818-001
Batch: 30818
Analytical Method: 8260B

Matrix: Aqueous
Prep Method: 5030B

Parameter	Result	Q	Dil	PQL	MDL	Units	Analysis Date
Acetone	ND		1	10	0.061	ug/L	04/02/2010 0025
Benzene	ND		1	0.50	0.027	ug/L	04/02/2010 0025
Bromodichloromethane	ND		1	0.50	0.17	ug/L	04/02/2010 0025
Bromoform	ND		1	0.50	0.010	ug/L	04/02/2010 0025
Bromomethane (Methyl bromide)	ND		1	0.50	0.20	ug/L	04/02/2010 0025
2-Butanone (MEK)	ND		1	10	2.0	ug/L	04/02/2010 0025
Carbon disulfide	ND		1	0.50	0.097	ug/L	04/02/2010 0025
Carbon tetrachloride	ND		1	0.50	0.085	ug/L	04/02/2010 0025
Chlorobenzene	ND		1	0.50	0.17	ug/L	04/02/2010 0025
Chloroethane	ND		1	0.50	0.17	ug/L	04/02/2010 0025
Chloroform	ND		1	0.50	0.17	ug/L	04/02/2010 0025
Chloromethane (Methyl chloride)	ND		1	0.50	0.17	ug/L	04/02/2010 0025
Cyclohexane	ND		1	0.50	0.30	ug/L	04/02/2010 0025
1,2-Dibromo-3-chloropropane (DBCP)	ND		1	0.50	0.069	ug/L	04/02/2010 0025
Dibromochloromethane	ND		1	0.50	0.17	ug/L	04/02/2010 0025
1,2-Dibromoethane (EDB)	ND		1	0.50	0.061	ug/L	04/02/2010 0025
1,2-Dichlorobenzene	ND		1	0.50	0.17	ug/L	04/02/2010 0025
1,4-Dichlorobenzene	ND		1	0.50	0.17	ug/L	04/02/2010 0025
1,3-Dichlorobenzene	ND		1	0.50	0.17	ug/L	04/02/2010 0025
Dichlorodifluoromethane	ND		1	0.50	0.071	ug/L	04/02/2010 0025
1,1-Dichloroethane	ND		1	0.50	0.054	ug/L	04/02/2010 0025
1,2-Dichloroethane	ND		1	0.50	0.023	ug/L	04/02/2010 0025
cis-1,2-Dichloroethene	ND		1	0.50	0.087	ug/L	04/02/2010 0025
1,1-Dichloroethene	ND		1	0.50	0.094	ug/L	04/02/2010 0025
trans-1,2-Dichloroethene	ND		1	0.50	0.079	ug/L	04/02/2010 0025
1,2-Dichloropropane	ND		1	0.50	0.081	ug/L	04/02/2010 0025
trans-1,3-Dichloropropene	ND		1	0.50	0.18	ug/L	04/02/2010 0025
cis-1,3-Dichloropropene	ND		1	0.50	0.090	ug/L	04/02/2010 0025
Ethylbenzene	ND		1	0.50	0.17	ug/L	04/02/2010 0025
2-Hexanone	ND		1	10	0.27	ug/L	04/02/2010 0025
Isopropylbenzene	ND		1	0.50	0.029	ug/L	04/02/2010 0025
Methyl acetate	ND		1	1.0	0.30	ug/L	04/02/2010 0025
Methyl tertiary butyl ether (MTBE)	ND		1	0.50	0.019	ug/L	04/02/2010 0025
4-Methyl-2-pentanone	ND		1	10	0.31	ug/L	04/02/2010 0025
Methylcyclohexane	ND		1	5.0	0.95	ug/L	04/02/2010 0025
Methylene chloride	ND		1	0.50	0.17	ug/L	04/02/2010 0025
Styrene	ND		1	0.50	0.015	ug/L	04/02/2010 0025
1,1,2,2-Tetrachloroethane	ND		1	0.50	0.013	ug/L	04/02/2010 0025
Tetrachloroethene	ND		1	0.50	0.014	ug/L	04/02/2010 0025
Toluene	ND		1	0.50	0.17	ug/L	04/02/2010 0025
1,1,2-Trichloro-1,2,2-Trifluoroethane	ND		1	0.50	0.30	ug/L	04/02/2010 0025
1,2,4-Trichlorobenzene	ND		1	0.50	0.17	ug/L	04/02/2010 0025
1,1,2-Trichloroethane	ND		1	0.50	0.031	ug/L	04/02/2010 0025
1,1,1-Trichloroethane	ND		1	0.50	0.029	ug/L	04/02/2010 0025

PQL = Practical quantitation limit
ND = Not detected at or above the MDL
P = The RPD between two GC columns exceeds 40%
J = Estimated result < PQL and ≥ MDL
N - Recovery is out of criteria
+ - RPD is out of criteria

Where applicable, all soil sample analysis are reported on a dry weight basis unless flagged with a "W"

Note: Calculations are performed before rounding to avoid round-off errors in calculated results

Volatile Organic Compounds by GC/MS - MB

Sample ID: LQ30818-001
Batch: 30818
Analytical Method: 8260B

Matrix: Aqueous
Prep Method: 5030B

Parameter	Result	Q	Dil	PQL	MDL	Units	Analysis Date
Trichloroethene	ND		1	0.50	0.024	ug/L	04/02/2010 0025
Trichlorofluoromethane	ND		1	0.50	0.051	ug/L	04/02/2010 0025
Vinyl chloride	ND		1	0.50	0.065	ug/L	04/02/2010 0025
Xylenes (total)	ND		1	0.50	0.17	ug/L	04/02/2010 0025

Surrogate	Q	% Rec	Acceptance Limit
Bromofluorobenzene		98	70-130
1,2-Dichloroethane-d4		105	70-130
Toluene-d8		105	70-130

PQL = Practical quantitation limit
ND = Not detected at or above the MDL
P = The RPD between two GC columns exceeds 40%
J = Estimated result < PQL and ≥ MDL
N - Recovery is out of criteria
+ - RPD is out of criteria

Where applicable, all soil sample analysis are reported on a dry weight basis unless flagged with a "W"

Note: Calculations are performed before rounding to avoid round-off errors in calculated results

Volatile Organic Compounds by GC/MS - LCS

Sample ID: LQ30818-002
Batch: 30818
Analytical Method: 8260B

Matrix: Aqueous
Prep Method: 5030B

Parameter	Spike Amount (ug/L)	Result (ug/L)	Q	Dil	% Rec	% Rec Limit	Analysis Date
Acetone	100	120		1	118	46-153	04/01/2010 2257
Benzene	50	50		1	100	70-130	04/01/2010 2257
Bromodichloromethane	50	53		1	105	70-130	04/01/2010 2257
Bromoform	50	47		1	94	70-130	04/01/2010 2257
Bromomethane (Methyl bromide)	50	64		1	128	60-140	04/01/2010 2257
2-Butanone (MEK)	100	85		1	85	60-140	04/01/2010 2257
Carbon disulfide	50	47		1	93	60-140	04/01/2010 2257
Carbon tetrachloride	50	52		1	105	70-130	04/01/2010 2257
Chlorobenzene	50	50		1	99	70-130	04/01/2010 2257
Chloroethane	50	57		1	115	42-163	04/01/2010 2257
Chloroform	50	48		1	97	70-130	04/01/2010 2257
Chloromethane (Methyl chloride)	50	45		1	90	20-158	04/01/2010 2257
Cyclohexane	50	46		1	92	70-130	04/01/2010 2257
1,2-Dibromo-3-chloropropane (DBCP)	50	43		1	87	70-130	04/01/2010 2257
Dibromochloromethane	50	55		1	109	70-130	04/01/2010 2257
1,2-Dibromoethane (EDB)	50	50		1	99	70-130	04/01/2010 2257
1,2-Dichlorobenzene	50	51		1	101	70-130	04/01/2010 2257
1,4-Dichlorobenzene	50	51		1	101	70-130	04/01/2010 2257
1,3-Dichlorobenzene	50	52		1	103	70-130	04/01/2010 2257
Dichlorodifluoromethane	50	52		1	105	60-140	04/01/2010 2257
1,1-Dichloroethane	50	47		1	94	70-130	04/01/2010 2257
1,2-Dichloroethane	50	48		1	96	70-130	04/01/2010 2257
cis-1,2-Dichloroethene	50	48		1	96	70-130	04/01/2010 2257
1,1-Dichloroethene	50	47		1	95	70-130	04/01/2010 2257
trans-1,2-Dichloroethene	50	47		1	93	70-130	04/01/2010 2257
1,2-Dichloropropane	50	48		1	96	70-130	04/01/2010 2257
trans-1,3-Dichloropropene	50	50		1	101	70-130	04/01/2010 2257
cis-1,3-Dichloropropene	50	53		1	106	70-130	04/01/2010 2257
Ethylbenzene	50	51		1	102	70-130	04/01/2010 2257
2-Hexanone	100	90		1	90	60-140	04/01/2010 2257
Isopropylbenzene	50	56		1	112	70-130	04/01/2010 2257
Methyl acetate	50	42		1	84	15-128	04/01/2010 2257
Methyl tertiary butyl ether (MTBE)	50	48		1	97	70-130	04/01/2010 2257
4-Methyl-2-pentanone	100	90		1	90	60-140	04/01/2010 2257
Methylcyclohexane	50	53		1	106	70-130	04/01/2010 2257
Methylene chloride	50	45		1	91	70-130	04/01/2010 2257
Styrene	50	52		1	104	70-130	04/01/2010 2257
1,1,2,2-Tetrachloroethane	50	46		1	91	70-130	04/01/2010 2257
Tetrachloroethene	50	53		1	105	70-130	04/01/2010 2257
Toluene	50	52		1	103	70-130	04/01/2010 2257
1,1,2-Trichloro-1,2,2-Trifluoroethane	50	51		1	101	70-130	04/01/2010 2257
1,2,4-Trichlorobenzene	50	55		1	109	70-130	04/01/2010 2257
1,1,2-Trichloroethane	50	46		1	92	70-130	04/01/2010 2257
1,1,1-Trichloroethane	50	53		1	107	70-130	04/01/2010 2257

PQL = Practical quantitation limit
ND = Not detected at or above the MDL
P = The RPD between two GC columns exceeds 40%
J = Estimated result < PQL and ≥ MDL
N - Recovery is out of criteria
+ - RPD is out of criteria

Where applicable, all soil sample analysis are reported on a dry weight basis unless flagged with a "W"

Note: Calculations are performed before rounding to avoid round-off errors in calculated results

Volatile Organic Compounds by GC/MS - LCS

Sample ID: LQ30818-002
Batch: 30818
Analytical Method: 8260B

Matrix: Aqueous
Prep Method: 5030B

Parameter	Spike Amount (ug/L)	Result (ug/L)	Q	Dil	% Rec	% Rec Limit	Analysis Date
Trichloroethene	50	52		1	104	70-130	04/01/2010 2257
Trichlorofluoromethane	50	59		1	119	60-140	04/01/2010 2257
Vinyl chloride	50	52		1	105	60-140	04/01/2010 2257
Xylenes (total)	100	110		1	106	70-130	04/01/2010 2257

Surrogate	Q	% Rec	Acceptance Limit
Bromofluorobenzene		100	70-130
1,2-Dichloroethane-d4		104	70-130
Toluene-d8		107	70-130

PQL = Practical quantitation limit
ND = Not detected at or above the MDL
P = The RPD between two GC columns exceeds 40%
J = Estimated result < PQL and ≥ MDL
N - Recovery is out of criteria
+ - RPD is out of criteria

Where applicable, all soil sample analysis are reported on a dry weight basis unless flagged with a "W"

Note: Calculations are performed before rounding to avoid round-off errors in calculated results

Volatile Organic Compounds by GC/MS - LCSD

Sample ID: LQ30818-003
Batch: 30818
Analytical Method: 8260B

Matrix: Aqueous
Prep Method: 5030B

Parameter	Spike Amount (ug/L)	Result (ug/L)	Q	Dil	% Rec	% RPD	% Rec Limit	% RPD Limit	Analysis Date
Acetone	100	120		1	116	2.0	46-153	20	04/01/2010 2319
Benzene	50	49		1	99	1.4	70-130	20	04/01/2010 2319
Bromodichloromethane	50	52		1	105	0.35	70-130	20	04/01/2010 2319
Bromoform	50	45		1	91	3.2	70-130	20	04/01/2010 2319
Bromomethane (Methyl bromide)	50	58		1	116	10	60-140	20	04/01/2010 2319
2-Butanone (MEK)	100	84		1	84	1.4	60-140	20	04/01/2010 2319
Carbon disulfide	50	44		1	89	4.7	60-140	20	04/01/2010 2319
Carbon tetrachloride	50	51		1	102	2.7	70-130	20	04/01/2010 2319
Chlorobenzene	50	50		1	100	1.2	70-130	20	04/01/2010 2319
Chloroethane	50	52		1	104	9.8	42-163	20	04/01/2010 2319
Chloroform	50	48		1	95	1.6	70-130	20	04/01/2010 2319
Chloromethane (Methyl chloride)	50	43		1	87	3.4	20-158	20	04/01/2010 2319
Cyclohexane	50	45		1	91	1.3	70-130	20	04/01/2010 2319
1,2-Dibromo-3-chloropropane (DBCP)	50	40		1	80	8.4	70-130	20	04/01/2010 2319
Dibromochloromethane	50	55		1	110	0.43	70-130	20	04/01/2010 2319
1,2-Dibromoethane (EDB)	50	50		1	101	1.8	70-130	20	04/01/2010 2319
1,2-Dichlorobenzene	50	50		1	99	1.9	70-130	20	04/01/2010 2319
1,4-Dichlorobenzene	50	51		1	102	1.1	70-130	20	04/01/2010 2319
1,3-Dichlorobenzene	50	51		1	103	0.78	70-130	20	04/01/2010 2319
Dichlorodifluoromethane	50	48		1	96	8.7	60-140	20	04/01/2010 2319
1,1-Dichloroethane	50	45		1	91	3.4	70-130	20	04/01/2010 2319
1,2-Dichloroethane	50	47		1	93	2.9	70-130	20	04/01/2010 2319
cis-1,2-Dichloroethene	50	47		1	94	3.0	70-130	20	04/01/2010 2319
1,1-Dichloroethene	50	46		1	92	2.5	70-130	20	04/01/2010 2319
trans-1,2-Dichloroethene	50	44		1	89	5.0	70-130	20	04/01/2010 2319
1,2-Dichloropropane	50	48		1	96	0.029	70-130	20	04/01/2010 2319
trans-1,3-Dichloropropene	50	51		1	103	2.1	70-130	20	04/01/2010 2319
cis-1,3-Dichloropropene	50	53		1	107	0.85	70-130	20	04/01/2010 2319
Ethylbenzene	50	51		1	102	0.44	70-130	20	04/01/2010 2319
2-Hexanone	100	92		1	92	1.8	60-140	20	04/01/2010 2319
Isopropylbenzene	50	54		1	109	3.1	70-130	20	04/01/2010 2319
Methyl acetate	50	39		1	78	7.5	15-128	20	04/01/2010 2319
Methyl tertiary butyl ether (MTBE)	50	44		1	88	9.4	70-130	20	04/01/2010 2319
4-Methyl-2-pentanone	100	88		1	88	2.1	60-140	20	04/01/2010 2319
Methylcyclohexane	50	52		1	105	1.3	70-130	20	04/01/2010 2319
Methylene chloride	50	43		1	86	4.6	70-130	20	04/01/2010 2319
Styrene	50	51		1	102	2.4	70-130	20	04/01/2010 2319
1,1,2,2-Tetrachloroethane	50	44		1	87	4.5	70-130	20	04/01/2010 2319
Tetrachloroethene	50	53		1	107	1.2	70-130	20	04/01/2010 2319
Toluene	50	51		1	103	0.56	70-130	20	04/01/2010 2319
1,1,2-Trichloro-1,2,2-Trifluoroethane	50	47		1	94	7.1	70-130	20	04/01/2010 2319
1,2,4-Trichlorobenzene	50	53		1	106	2.6	70-130	20	04/01/2010 2319
1,1,2-Trichloroethane	50	47		1	94	1.8	70-130	20	04/01/2010 2319
1,1,1-Trichloroethane	50	52		1	104	3.2	70-130	20	04/01/2010 2319

PQL = Practical quantitation limit
ND = Not detected at or above the MDL
P = The RPD between two GC columns exceeds 40%
J = Estimated result < PQL and ≥ MDL
N - Recovery is out of criteria
+ - RPD is out of criteria

Where applicable, all soil sample analysis are reported on a dry weight basis unless flagged with a "W"

Note: Calculations are performed before rounding to avoid round-off errors in calculated results

Volatile Organic Compounds by GC/MS - LCSD

Sample ID: LQ30818-003
Batch: 30818
Analytical Method: 8260B

Matrix: Aqueous
Prep Method: 5030B

Parameter	Spike Amount (ug/L)	Result (ug/L)	Q	Dil	% Rec	% RPD	% Rec Limit	% RPD Limit	Analysis Date
Trichloroethene	50	51		1	101	2.0	70-130	20	04/01/2010 2319
Trichlorofluoromethane	50	57		1	114	4.4	60-140	20	04/01/2010 2319
Vinyl chloride	50	49		1	99	6.1	60-140	20	04/01/2010 2319
Xylenes (total)	100	100		1	105	1.0	70-130	20	04/01/2010 2319

Surrogate	Q	% Rec	Acceptance Limit
Bromofluorobenzene		98	70-130
1,2-Dichloroethane-d4		101	70-130
Toluene-d8		106	70-130

PQL = Practical quantitation limit
ND = Not detected at or above the MDL
P = The RPD between two GC columns exceeds 40%
J = Estimated result < PQL and ≥ MDL
N - Recovery is out of criteria
+ - RPD is out of criteria

Where applicable, all soil sample analysis are reported on a dry weight basis unless flagged with a "W"

Note: Calculations are performed before rounding to avoid round-off errors in calculated results

Volatile Organic Compounds by GC/MS - MB

Sample ID: LQ30893-001
Batch: 30893
Analytical Method: 8260B

Matrix: Aqueous
Prep Method: 5030B

Parameter	Result	Q	Dil	PQL	MDL	Units	Analysis Date
Acetone	ND		1	10	0.061	ug/L	04/02/2010 2342
Benzene	ND		1	0.50	0.027	ug/L	04/02/2010 2342
Bromodichloromethane	ND		1	0.50	0.17	ug/L	04/02/2010 2342
Bromoform	ND		1	0.50	0.010	ug/L	04/02/2010 2342
Bromomethane (Methyl bromide)	ND		1	0.50	0.20	ug/L	04/02/2010 2342
2-Butanone (MEK)	ND		1	10	2.0	ug/L	04/02/2010 2342
Carbon disulfide	ND		1	0.50	0.097	ug/L	04/02/2010 2342
Carbon tetrachloride	ND		1	0.50	0.085	ug/L	04/02/2010 2342
Chlorobenzene	ND		1	0.50	0.17	ug/L	04/02/2010 2342
Chloroethane	ND		1	0.50	0.17	ug/L	04/02/2010 2342
Chloroform	ND		1	0.50	0.17	ug/L	04/02/2010 2342
Chloromethane (Methyl chloride)	ND		1	0.50	0.17	ug/L	04/02/2010 2342
Cyclohexane	ND		1	0.50	0.30	ug/L	04/02/2010 2342
1,2-Dibromo-3-chloropropane (DBCP)	ND		1	0.50	0.069	ug/L	04/02/2010 2342
Dibromochloromethane	ND		1	0.50	0.17	ug/L	04/02/2010 2342
1,2-Dibromoethane (EDB)	ND		1	0.50	0.061	ug/L	04/02/2010 2342
1,4-Dichlorobenzene	ND		1	0.50	0.17	ug/L	04/02/2010 2342
1,2-Dichlorobenzene	ND		1	0.50	0.17	ug/L	04/02/2010 2342
1,3-Dichlorobenzene	ND		1	0.50	0.17	ug/L	04/02/2010 2342
Dichlorodifluoromethane	ND		1	0.50	0.071	ug/L	04/02/2010 2342
1,1-Dichloroethane	ND		1	0.50	0.054	ug/L	04/02/2010 2342
1,2-Dichloroethane	ND		1	0.50	0.023	ug/L	04/02/2010 2342
trans-1,2-Dichloroethene	ND		1	0.50	0.079	ug/L	04/02/2010 2342
cis-1,2-Dichloroethene	ND		1	0.50	0.087	ug/L	04/02/2010 2342
1,1-Dichloroethene	ND		1	0.50	0.094	ug/L	04/02/2010 2342
1,2-Dichloropropane	ND		1	0.50	0.081	ug/L	04/02/2010 2342
cis-1,3-Dichloropropene	ND		1	0.50	0.090	ug/L	04/02/2010 2342
trans-1,3-Dichloropropene	ND		1	0.50	0.18	ug/L	04/02/2010 2342
Ethylbenzene	ND		1	0.50	0.17	ug/L	04/02/2010 2342
2-Hexanone	ND		1	10	0.27	ug/L	04/02/2010 2342
Isopropylbenzene	ND		1	0.50	0.029	ug/L	04/02/2010 2342
Methyl acetate	ND		1	1.0	0.30	ug/L	04/02/2010 2342
Methyl tertiary butyl ether (MTBE)	ND		1	0.50	0.019	ug/L	04/02/2010 2342
4-Methyl-2-pentanone	ND		1	10	0.31	ug/L	04/02/2010 2342
Methylcyclohexane	ND		1	5.0	0.95	ug/L	04/02/2010 2342
Methylene chloride	0.22	J	1	0.50	0.17	ug/L	04/02/2010 2342
Styrene	ND		1	0.50	0.015	ug/L	04/02/2010 2342
1,1,2,2-Tetrachloroethane	ND		1	0.50	0.013	ug/L	04/02/2010 2342
Tetrachloroethene	ND		1	0.50	0.014	ug/L	04/02/2010 2342
Toluene	ND		1	0.50	0.17	ug/L	04/02/2010 2342
1,1,2-Trichloro-1,2,2-Trifluoroethane	ND		1	0.50	0.30	ug/L	04/02/2010 2342
1,2,4-Trichlorobenzene	ND		1	0.50	0.17	ug/L	04/02/2010 2342
1,1,1-Trichloroethane	ND		1	0.50	0.029	ug/L	04/02/2010 2342
1,1,2-Trichloroethane	ND		1	0.50	0.031	ug/L	04/02/2010 2342

PQL = Practical quantitation limit
ND = Not detected at or above the MDL
P = The RPD between two GC columns exceeds 40%
J = Estimated result < PQL and ≥ MDL
N - Recovery is out of criteria
+ - RPD is out of criteria

Where applicable, all soil sample analysis are reported on a dry weight basis unless flagged with a "W"

Note: Calculations are performed before rounding to avoid round-off errors in calculated results

Volatile Organic Compounds by GC/MS - MB

Sample ID: LQ30893-001
Batch: 30893
Analytical Method: 8260B

Matrix: Aqueous
Prep Method: 5030B

Parameter	Result	Q	Dil	PQL	MDL	Units	Analysis Date
Trichloroethene	ND		1	0.50	0.024	ug/L	04/02/2010 2342
Trichlorofluoromethane	ND		1	0.50	0.051	ug/L	04/02/2010 2342
Vinyl chloride	ND		1	0.50	0.065	ug/L	04/02/2010 2342
Xylenes (total)	ND		1	0.50	0.17	ug/L	04/02/2010 2342

Surrogate	Q	% Rec	Acceptance Limit
Bromofluorobenzene		99	70-130
1,2-Dichloroethane-d4		96	70-130
Toluene-d8		101	70-130

PQL = Practical quantitation limit
ND = Not detected at or above the MDL
P = The RPD between two GC columns exceeds 40%
J = Estimated result < PQL and ≥ MDL
N - Recovery is out of criteria
+ - RPD is out of criteria

Where applicable, all soil sample analysis are reported on a dry weight basis unless flagged with a "W"

Note: Calculations are performed before rounding to avoid round-off errors in calculated results

Volatile Organic Compounds by GC/MS - LCS

Sample ID: LQ30893-002
Batch: 30893
Analytical Method: 8260B

Matrix: Aqueous
Prep Method: 5030B

Parameter	Spike Amount (ug/L)	Result (ug/L)	Q	Dil	% Rec	% Rec Limit	Analysis Date
Acetone	40	45		1	112	46-153	04/02/2010 2216
Benzene	20	21		1	106	70-130	04/02/2010 2216
Bromodichloromethane	20	21		1	104	70-130	04/02/2010 2216
Bromoform	20	18		1	89	70-130	04/02/2010 2216
Bromomethane (Methyl bromide)	20	19		1	96	60-140	04/02/2010 2216
2-Butanone (MEK)	40	43		1	107	60-140	04/02/2010 2216
Carbon disulfide	20	20		1	101	60-140	04/02/2010 2216
Carbon tetrachloride	20	20		1	99	70-130	04/02/2010 2216
Chlorobenzene	20	22		1	109	70-130	04/02/2010 2216
Chloroethane	20	20		1	99	42-163	04/02/2010 2216
Chloroform	20	21		1	103	70-130	04/02/2010 2216
Chloromethane (Methyl chloride)	20	18		1	92	20-158	04/02/2010 2216
Cyclohexane	20	18		1	91	70-130	04/02/2010 2216
1,2-Dibromo-3-chloropropane (DBCP)	20	20		1	99	70-130	04/02/2010 2216
Dibromochloromethane	20	20		1	101	70-130	04/02/2010 2216
1,2-Dibromoethane (EDB)	20	22		1	112	70-130	04/02/2010 2216
1,4-Dichlorobenzene	20	22		1	111	70-130	04/02/2010 2216
1,2-Dichlorobenzene	20	22		1	112	70-130	04/02/2010 2216
1,3-Dichlorobenzene	20	22		1	112	70-130	04/02/2010 2216
Dichlorodifluoromethane	20	23		1	113	60-140	04/02/2010 2216
1,1-Dichloroethane	20	20		1	102	70-130	04/02/2010 2216
1,2-Dichloroethane	20	21		1	103	70-130	04/02/2010 2216
trans-1,2-Dichloroethene	20	21		1	103	70-130	04/02/2010 2216
cis-1,2-Dichloroethene	20	20		1	102	70-130	04/02/2010 2216
1,1-Dichloroethene	20	20		1	102	70-130	04/02/2010 2216
1,2-Dichloropropane	20	21		1	106	70-130	04/02/2010 2216
cis-1,3-Dichloropropene	20	21		1	107	70-130	04/02/2010 2216
trans-1,3-Dichloropropene	20	22		1	110	70-130	04/02/2010 2216
Ethylbenzene	20	22		1	110	70-130	04/02/2010 2216
2-Hexanone	40	48		1	121	60-140	04/02/2010 2216
Isopropylbenzene	20	23		1	114	70-130	04/02/2010 2216
Methyl acetate	20	22		1	108	15-128	04/02/2010 2216
Methyl tertiary butyl ether (MTBE)	20	21		1	103	70-130	04/02/2010 2216
4-Methyl-2-pentanone	40	44		1	111	60-140	04/02/2010 2216
Methylcyclohexane	20	21		1	105	70-130	04/02/2010 2216
Methylene chloride	20	19		1	97	70-130	04/02/2010 2216
Styrene	20	23		1	116	70-130	04/02/2010 2216
1,1,2,2-Tetrachloroethane	20	24		1	118	70-130	04/02/2010 2216
Tetrachloroethene	20	21		1	106	70-130	04/02/2010 2216
Toluene	20	21		1	106	70-130	04/02/2010 2216
1,1,2-Trichloro-1,2,2-Trifluoroethane	20	20		1	99	70-130	04/02/2010 2216
1,2,4-Trichlorobenzene	20	23		1	117	70-130	04/02/2010 2216
1,1,1-Trichloroethane	20	20		1	100	70-130	04/02/2010 2216
1,1,2-Trichloroethane	20	21		1	106	70-130	04/02/2010 2216

PQL = Practical quantitation limit
ND = Not detected at or above the MDL
P = The RPD between two GC columns exceeds 40%
J = Estimated result < PQL and ≥ MDL
N - Recovery is out of criteria
+ - RPD is out of criteria

Where applicable, all soil sample analysis are reported on a dry weight basis unless flagged with a "W"

Note: Calculations are performed before rounding to avoid round-off errors in calculated results

Volatile Organic Compounds by GC/MS - LCS

Sample ID: LQ30893-002
Batch: 30893
Analytical Method: 8260B

Matrix: Aqueous
Prep Method: 5030B

Parameter	Spike Amount (ug/L)	Result (ug/L)	Q	Dil	% Rec	% Rec Limit	Analysis Date
Trichloroethene	20	20		1	102	70-130	04/02/2010 2216
Trichlorofluoromethane	20	20		1	100	60-140	04/02/2010 2216
Vinyl chloride	20	20		1	101	60-140	04/02/2010 2216
Xylenes (total)	40	45		1	112	70-130	04/02/2010 2216

Surrogate	Q	% Rec	Acceptance Limit
Bromofluorobenzene		104	70-130
1,2-Dichloroethane-d4		88	70-130
Toluene-d8		95	70-130

PQL = Practical quantitation limit
ND = Not detected at or above the MDL
P = The RPD between two GC columns exceeds 40%
J = Estimated result < PQL and ≥ MDL
N - Recovery is out of criteria
+ - RPD is out of criteria

Where applicable, all soil sample analysis are reported on a dry weight basis unless flagged with a "W"

Note: Calculations are performed before rounding to avoid round-off errors in calculated results

Volatile Organic Compounds by GC/MS - LCSD

Sample ID: LQ30893-003
Batch: 30893
Analytical Method: 8260B

Matrix: Aqueous
Prep Method: 5030B

Parameter	Spike Amount (ug/L)	Result (ug/L)	Q	Dil	% Rec	% RPD	% Rec Limit	% RPD Limit	Analysis Date
Acetone	40	42		1	106	5.0	46-153	20	04/02/2010 2238
Benzene	20	21		1	105	1.1	70-130	20	04/02/2010 2238
Bromodichloromethane	20	21		1	103	1.0	70-130	20	04/02/2010 2238
Bromoform	20	17		1	87	2.2	70-130	20	04/02/2010 2238
Bromomethane (Methyl bromide)	20	18		1	89	7.8	60-140	20	04/02/2010 2238
2-Butanone (MEK)	40	42		1	105	1.9	60-140	20	04/02/2010 2238
Carbon disulfide	20	19		1	94	7.4	60-140	20	04/02/2010 2238
Carbon tetrachloride	20	19		1	95	3.8	70-130	20	04/02/2010 2238
Chlorobenzene	20	22		1	109	0.38	70-130	20	04/02/2010 2238
Chloroethane	20	18		1	91	9.0	42-163	20	04/02/2010 2238
Chloroform	20	20		1	99	4.0	70-130	20	04/02/2010 2238
Chloromethane (Methyl chloride)	20	17		1	85	8.2	20-158	20	04/02/2010 2238
Cyclohexane	20	17		1	83	8.7	70-130	20	04/02/2010 2238
1,2-Dibromo-3-chloropropane (DBCP)	20	20		1	101	2.4	70-130	20	04/02/2010 2238
Dibromochloromethane	20	21		1	103	1.5	70-130	20	04/02/2010 2238
1,2-Dibromoethane (EDB)	20	23		1	113	0.71	70-130	20	04/02/2010 2238
1,4-Dichlorobenzene	20	22		1	112	0.87	70-130	20	04/02/2010 2238
1,2-Dichlorobenzene	20	23		1	113	0.97	70-130	20	04/02/2010 2238
1,3-Dichlorobenzene	20	22		1	110	1.6	70-130	20	04/02/2010 2238
Dichlorodifluoromethane	20	22		1	112	1.2	60-140	20	04/02/2010 2238
1,1-Dichloroethane	20	20		1	100	1.8	70-130	20	04/02/2010 2238
1,2-Dichloroethane	20	20		1	102	1.3	70-130	20	04/02/2010 2238
trans-1,2-Dichloroethene	20	19		1	97	5.7	70-130	20	04/02/2010 2238
cis-1,2-Dichloroethene	20	20		1	98	3.8	70-130	20	04/02/2010 2238
1,1-Dichloroethene	20	19		1	96	6.1	70-130	20	04/02/2010 2238
1,2-Dichloropropane	20	21		1	105	0.53	70-130	20	04/02/2010 2238
cis-1,3-Dichloropropene	20	22		1	108	0.82	70-130	20	04/02/2010 2238
trans-1,3-Dichloropropene	20	23		1	114	3.6	70-130	20	04/02/2010 2238
Ethylbenzene	20	22		1	109	0.82	70-130	20	04/02/2010 2238
2-Hexanone	40	48		1	120	0.84	60-140	20	04/02/2010 2238
Isopropylbenzene	20	23		1	115	0.86	70-130	20	04/02/2010 2238
Methyl acetate	20	21		1	103	5.0	15-128	20	04/02/2010 2238
Methyl tertiary butyl ether (MTBE)	20	19		1	95	8.0	70-130	20	04/02/2010 2238
4-Methyl-2-pentanone	40	44		1	109	2.1	60-140	20	04/02/2010 2238
Methylcyclohexane	20	20		1	101	4.2	70-130	20	04/02/2010 2238
Methylene chloride	20	18		1	92	5.3	70-130	20	04/02/2010 2238
Styrene	20	23		1	113	2.5	70-130	20	04/02/2010 2238
1,1,2,2-Tetrachloroethane	20	24		1	118	0.17	70-130	20	04/02/2010 2238
Tetrachloroethene	20	22		1	109	2.8	70-130	20	04/02/2010 2238
Toluene	20	21		1	107	0.61	70-130	20	04/02/2010 2238
1,1,2-Trichloro-1,2,2-Trifluoroethane	20	18		1	91	7.9	70-130	20	04/02/2010 2238
1,2,4-Trichlorobenzene	20	28	N	1	140	18	70-130	20	04/02/2010 2238
1,1,1-Trichloroethane	20	19		1	93	7.3	70-130	20	04/02/2010 2238
1,1,2-Trichloroethane	20	22		1	109	2.7	70-130	20	04/02/2010 2238

PQL = Practical quantitation limit
ND = Not detected at or above the MDL
P = The RPD between two GC columns exceeds 40%
J = Estimated result < PQL and ≥ MDL
N - Recovery is out of criteria
+ - RPD is out of criteria

Where applicable, all soil sample analysis are reported on a dry weight basis unless flagged with a "W"

Note: Calculations are performed before rounding to avoid round-off errors in calculated results

Volatile Organic Compounds by GC/MS - LCSD

Sample ID: LQ30893-003
Batch: 30893
Analytical Method: 8260B

Matrix: Aqueous
Prep Method: 5030B

Parameter	Spike Amount (ug/L)	Result (ug/L)	Q	Dil	% Rec	% RPD	% Rec Limit	% RPD Limit	Analysis Date
Trichloroethene	20	21		1	103	0.55	70-130	20	04/02/2010 2238
Trichlorofluoromethane	20	18		1	92	8.7	60-140	20	04/02/2010 2238
Vinyl chloride	20	19		1	94	7.7	60-140	20	04/02/2010 2238
Xylenes (total)	40	44		1	110	1.6	70-130	20	04/02/2010 2238

Surrogate	Q	% Rec	Acceptance Limit
Bromofluorobenzene		98	70-130
1,2-Dichloroethane-d4		97	70-130
Toluene-d8		102	70-130

PQL = Practical quantitation limit
ND = Not detected at or above the MDL
P = The RPD between two GC columns exceeds 40%
J = Estimated result < PQL and ≥ MDL
N - Recovery is out of criteria
+ - RPD is out of criteria

Where applicable, all soil sample analysis are reported on a dry weight basis unless flagged with a "W"

Note: Calculations are performed before rounding to avoid round-off errors in calculated results

Volatile Organic Compounds by GC/MS - MS

Sample ID: LD01022-007MS
Batch: 30893
Analytical Method: 8260B

Matrix: Aqueous
Prep Method: 5030B

Parameter	Sample Amount (ug/L)	Spike Amount (ug/L)	Result (ug/L)	Q	Dil	% Rec	% Rec Limit	Analysis Date
Acetone	2.9	100	58	N	1	58	80-130	04/03/2010 0732
Benzene	0.53	50	29	N	1	56	70-130	04/03/2010 0732
Bromodichloromethane	ND	50	27	N	1	54	70-130	04/03/2010 0732
Bromoform	ND	50	21	N	1	42	70-130	04/03/2010 0732
Bromomethane (Methyl bromide)	ND	50	26	N	1	51	60-140	04/03/2010 0732
2-Butanone (MEK)	ND	100	53	N	1	53	60-140	04/03/2010 0732
Carbon disulfide	0.23	50	26	N	1	51	60-140	04/03/2010 0732
Carbon tetrachloride	ND	50	27	N	1	54	70-130	04/03/2010 0732
Chlorobenzene	ND	50	29	N	1	57	70-130	04/03/2010 0732
Chloroethane	ND	50	28		1	56	42-163	04/03/2010 0732
Chloroform	ND	50	27	N	1	54	70-130	04/03/2010 0732
Chloromethane (Methyl chloride)	ND	50	26		1	53	20-158	04/03/2010 0732
Cyclohexane	ND	50	28	N	1	57	70-130	04/03/2010 0732
1,2-Dibromo-3-chloropropane (DBCP)	ND	50	25	N	1	50	70-130	04/03/2010 0732
Dibromochloromethane	ND	50	25	N	1	50	70-130	04/03/2010 0732
1,2-Dibromoethane (EDB)	ND	50	29	N	1	58	70-130	04/03/2010 0732
1,4-Dichlorobenzene	ND	50	28	N	1	56	70-130	04/03/2010 0732
1,2-Dichlorobenzene	ND	50	28	N	1	56	70-130	04/03/2010 0732
1,3-Dichlorobenzene	ND	50	28	N	1	56	70-130	04/03/2010 0732
Dichlorodifluoromethane	ND	50	32		1	65	60-140	04/03/2010 0732
1,1-Dichloroethane	ND	50	27	N	1	54	70-130	04/03/2010 0732
1,2-Dichloroethane	ND	50	28	N	1	55	70-130	04/03/2010 0732
trans-1,2-Dichloroethene	0.33	50	28	N	1	56	70-130	04/03/2010 0732
cis-1,2-Dichloroethene	4.4	50	32	N	1	54	70-130	04/03/2010 0732
1,1-Dichloroethene	0.10	50	27	N	1	55	70-130	04/03/2010 0732
1,2-Dichloropropane	ND	50	28	N	1	55	70-130	04/03/2010 0732
cis-1,3-Dichloropropene	ND	50	25	N	1	51	70-130	04/03/2010 0732
trans-1,3-Dichloropropene	ND	50	26	N	1	51	70-130	04/03/2010 0732
Ethylbenzene	ND	50	28	N	1	57	70-130	04/03/2010 0732
2-Hexanone	ND	100	60		1	60	60-140	04/03/2010 0732
Isopropylbenzene	ND	50	29	N	1	57	70-130	04/03/2010 0732
Methyl acetate	ND	50	24		1	48	15-128	04/03/2010 0732
Methyl tertiary butyl ether (MTBE)	ND	50	25	N	1	51	70-130	04/03/2010 0732
4-Methyl-2-pentanone	ND	100	56	N	1	56	60-140	04/03/2010 0732
Methylcyclohexane	ND	50	29	N	1	59	70-130	04/03/2010 0732
Methylene chloride	ND	50	25	N	1	51	70-130	04/03/2010 0732
Styrene	ND	50	22	N	1	43	70-130	04/03/2010 0732
1,1,2,2-Tetrachloroethane	ND	50	29	N	1	58	70-130	04/03/2010 0732
Tetrachloroethene	40	50	68	N	1	57	70-130	04/03/2010 0732
Toluene	ND	50	28	N	1	55	70-130	04/03/2010 0732
1,1,2-Trichloro-1,2,2-Trifluoroethane	ND	50	28	N	1	55	70-130	04/03/2010 0732
1,2,4-Trichlorobenzene	ND	50	28	N	1	56	70-130	04/03/2010 0732
1,1,1-Trichloroethane	ND	50	27	N	1	54	70-130	04/03/2010 0732
1,1,2-Trichloroethane	ND	50	28	N	1	55	70-130	04/03/2010 0732

PQL = Practical quantitation limit
ND = Not detected at or above the MDL
P = The RPD between two GC columns exceeds 40%
J = Estimated result < PQL and ≥ MDL
N - Recovery is out of criteria
+ - RPD is out of criteria

Where applicable, all soil sample analysis are reported on a dry weight basis unless flagged with a "W"

Note: Calculations are performed before rounding to avoid round-off errors in calculated results

Volatile Organic Compounds by GC/MS - MS

Sample ID: LD01022-007MS
Batch: 30893
Analytical Method: 8260B

Matrix: Aqueous
Prep Method: 5030B

Parameter	Sample Amount (ug/L)	Spike Amount (ug/L)	Result (ug/L)	Q	Dil	% Rec	% Rec Limit	Analysis Date
Trichloroethene	40	50	69	N	1	56	70-130	04/03/2010 0732
Trichlorofluoromethane	ND	50	28	N	1	55	60-140	04/03/2010 0732
Vinyl chloride	ND	50	31		1	61	60-140	04/03/2010 0732
Xylenes (total)	ND	100	55	N	1	55	70-130	04/03/2010 0732

Surrogate	Q	% Rec	Acceptance Limit
Bromofluorobenzene		99	70-130
1,2-Dichloroethane-d4		97	70-130
Toluene-d8		101	70-130

PQL = Practical quantitation limit
ND = Not detected at or above the MDL
P = The RPD between two GC columns exceeds 40%
J = Estimated result < PQL and ≥ MDL
N - Recovery is out of criteria
+ - RPD is out of criteria

Where applicable, all soil sample analysis are reported on a dry weight basis unless flagged with a "W"

Note: Calculations are performed before rounding to avoid round-off errors in calculated results

Volatile Organic Compounds by GC/MS - MSD

Sample ID: LD01022-007MD
Batch: 30893
Analytical Method: 8260B

Matrix: Aqueous
Prep Method: 5030B

Parameter	Sample Amount (ug/L)	Spike Amount (ug/L)	Result (ug/L)	Q	Dil	% Rec	% RPD	% Rec Limit	% RPD Limit	Analysis Date
Acetone	2.9	100	71	N	1	71	20	80-130	20	04/03/2010 0753
Benzene	0.53	50	36	+	1	71	22	70-130	20	04/03/2010 0753
Bromodichloromethane	ND	50	35	+	1	70	26	70-130	20	04/03/2010 0753
Bromoform	ND	50	28	N,+	1	55	27	70-130	20	04/03/2010 0753
Bromomethane (Methyl bromide)	ND	50	31		1	61	18	60-140	20	04/03/2010 0753
2-Butanone (MEK)	ND	100	71	+	1	71	29	60-140	20	04/03/2010 0753
Carbon disulfide	0.23	50	32	+	1	63	21	60-140	20	04/03/2010 0753
Carbon tetrachloride	ND	50	35	N,+	1	69	25	70-130	20	04/03/2010 0753
Chlorobenzene	ND	50	37	+	1	74	25	70-130	20	04/03/2010 0753
Chloroethane	ND	50	33		1	66	17	42-163	20	04/03/2010 0753
Chloroform	ND	50	34	N,+	1	67	22	70-130	20	04/03/2010 0753
Chloromethane (Methyl chloride)	ND	50	31		1	63	17	20-158	20	04/03/2010 0753
Cyclohexane	ND	50	37	+	1	74	27	70-130	20	04/03/2010 0753
1,2-Dibromo-3-chloropropane (DBCP)	ND	50	35	+	1	71	34	70-130	20	04/03/2010 0753
Dibromochloromethane	ND	50	32	N,+	1	64	25	70-130	20	04/03/2010 0753
1,2-Dibromoethane (EDB)	ND	50	38	+	1	77	28	70-130	20	04/03/2010 0753
1,4-Dichlorobenzene	ND	50	37	+	1	74	27	70-130	20	04/03/2010 0753
1,2-Dichlorobenzene	ND	50	37	+	1	75	28	70-130	20	04/03/2010 0753
1,3-Dichlorobenzene	ND	50	36	+	1	72	25	70-130	20	04/03/2010 0753
Dichlorodifluoromethane	ND	50	43	+	1	86	28	60-140	20	04/03/2010 0753
1,1-Dichloroethane	ND	50	34	N,+	1	68	22	70-130	20	04/03/2010 0753
1,2-Dichloroethane	ND	50	34	N,+	1	68	21	70-130	20	04/03/2010 0753
trans-1,2-Dichloroethene	0.33	50	34	N	1	68	20	70-130	20	04/03/2010 0753
cis-1,2-Dichloroethene	4.4	50	38	N	1	67	19	70-130	20	04/03/2010 0753
1,1-Dichloroethene	0.10	50	34	N,+	1	67	21	70-130	20	04/03/2010 0753
1,2-Dichloropropane	ND	50	36	+	1	72	25	70-130	20	04/03/2010 0753
cis-1,3-Dichloropropene	ND	50	33	N,+	1	65	26	70-130	20	04/03/2010 0753
trans-1,3-Dichloropropene	ND	50	34	N,+	1	68	28	70-130	20	04/03/2010 0753
Ethylbenzene	ND	50	37	+	1	74	27	70-130	20	04/03/2010 0753
2-Hexanone	ND	100	81	+	1	81	30	60-140	20	04/03/2010 0753
Isopropylbenzene	ND	50	37	+	1	74	25	70-130	20	04/03/2010 0753
Methyl acetate	ND	50	30	+	1	61	23	15-128	20	04/03/2010 0753
Methyl tertiary butyl ether (MTBE)	ND	50	32	N,+	1	65	24	70-130	20	04/03/2010 0753
4-Methyl-2-pentanone	ND	100	74	+	1	74	28	60-140	20	04/03/2010 0753
Methylcyclohexane	ND	50	37	+	1	75	24	70-130	20	04/03/2010 0753
Methylene chloride	ND	50	31	N	1	62	20	70-130	20	04/03/2010 0753
Styrene	ND	50	30	N,+	1	59	31	70-130	20	04/03/2010 0753
1,1,2,2-Tetrachloroethane	ND	50	36	+	1	73	22	70-130	20	04/03/2010 0753
Tetrachloroethene	40	50	77		1	75	13	70-130	20	04/03/2010 0753
Toluene	ND	50	36	+	1	72	27	70-130	20	04/03/2010 0753
1,1,2-Trichloro-1,2,2-Trifluoroethane	ND	50	36	+	1	72	26	70-130	20	04/03/2010 0753
1,2,4-Trichlorobenzene	ND	50	38	+	1	76	30	70-130	20	04/03/2010 0753
1,1,1-Trichloroethane	ND	50	34	N,+	1	68	24	70-130	20	04/03/2010 0753
1,1,2-Trichloroethane	ND	50	36	+	1	72	27	70-130	20	04/03/2010 0753

PQL = Practical quantitation limit
ND = Not detected at or above the MDL
P = The RPD between two GC columns exceeds 40%
J = Estimated result < PQL and ≥ MDL
N - Recovery is out of criteria
+ - RPD is out of criteria

Where applicable, all soil sample analysis are reported on a dry weight basis unless flagged with a "W"

Note: Calculations are performed before rounding to avoid round-off errors in calculated results

Volatile Organic Compounds by GC/MS - MSD

Sample ID: LD01022-007MD
Batch: 30893
Analytical Method: 8260B

Matrix: Aqueous
Prep Method: 5030B

Parameter	Sample Amount (ug/L)	Spike Amount (ug/L)	Result (ug/L)	Q	Dil	% Rec	% RPD	% Rec Limit	% RPD Limit	Analysis Date
Trichloroethene	40	50	77		1	73	12	70-130	20	04/03/2010 0753
Trichlorofluoromethane	ND	50	36	+	1	72	27	60-140	20	04/03/2010 0753
Vinyl chloride	ND	50	38	+	1	76	22	60-140	20	04/03/2010 0753
Xylenes (total)	ND	100	72	+	1	72	28	70-130	20	04/03/2010 0753

Surrogate	Q	% Rec	Acceptance Limit
Bromofluorobenzene		99	70-130
1,2-Dichloroethane-d4		96	70-130
Toluene-d8		101	70-130

PQL = Practical quantitation limit
ND = Not detected at or above the MDL
P = The RPD between two GC columns exceeds 40%
J = Estimated result < PQL and ≥ MDL
N - Recovery is out of criteria
+ - RPD is out of criteria

Where applicable, all soil sample analysis are reported on a dry weight basis unless flagged with a "W"

Note: Calculations are performed before rounding to avoid round-off errors in calculated results

Volatile Organic Compounds by GC/MS - MB

Sample ID: LQ30897-001
Batch: 30897
Analytical Method: 8260B

Matrix: Aqueous
Prep Method: 5030B

Parameter	Result	Q	Dil	PQL	MDL	Units	Analysis Date
Acetone	ND		1	10	0.061	ug/L	04/02/2010 2349
Benzene	ND		1	0.50	0.027	ug/L	04/02/2010 2349
Bromodichloromethane	ND		1	0.50	0.17	ug/L	04/02/2010 2349
Bromoform	ND		1	0.50	0.010	ug/L	04/02/2010 2349
Bromomethane (Methyl bromide)	ND		1	0.50	0.20	ug/L	04/02/2010 2349
2-Butanone (MEK)	ND		1	10	2.0	ug/L	04/02/2010 2349
Carbon disulfide	ND		1	0.50	0.097	ug/L	04/02/2010 2349
Carbon tetrachloride	ND		1	0.50	0.085	ug/L	04/02/2010 2349
Chlorobenzene	ND		1	0.50	0.17	ug/L	04/02/2010 2349
Chloroethane	ND		1	0.50	0.17	ug/L	04/02/2010 2349
Chloroform	ND		1	0.50	0.17	ug/L	04/02/2010 2349
Chloromethane (Methyl chloride)	ND		1	0.50	0.17	ug/L	04/02/2010 2349
Cyclohexane	ND		1	0.50	0.30	ug/L	04/02/2010 2349
1,2-Dibromo-3-chloropropane (DBCP)	ND		1	0.50	0.069	ug/L	04/02/2010 2349
Dibromochloromethane	ND		1	0.50	0.17	ug/L	04/02/2010 2349
1,2-Dibromoethane (EDB)	ND		1	0.50	0.061	ug/L	04/02/2010 2349
1,3-Dichlorobenzene	ND		1	0.50	0.17	ug/L	04/02/2010 2349
1,2-Dichlorobenzene	ND		1	0.50	0.17	ug/L	04/02/2010 2349
1,4-Dichlorobenzene	ND		1	0.50	0.17	ug/L	04/02/2010 2349
Dichlorodifluoromethane	ND		1	0.50	0.071	ug/L	04/02/2010 2349
1,1-Dichloroethane	ND		1	0.50	0.054	ug/L	04/02/2010 2349
1,2-Dichloroethane	ND		1	0.50	0.023	ug/L	04/02/2010 2349
cis-1,2-Dichloroethene	ND		1	0.50	0.087	ug/L	04/02/2010 2349
1,1-Dichloroethene	ND		1	0.50	0.094	ug/L	04/02/2010 2349
trans-1,2-Dichloroethene	ND		1	0.50	0.079	ug/L	04/02/2010 2349
1,2-Dichloropropane	ND		1	0.50	0.081	ug/L	04/02/2010 2349
cis-1,3-Dichloropropene	ND		1	0.50	0.090	ug/L	04/02/2010 2349
trans-1,3-Dichloropropene	ND		1	0.50	0.18	ug/L	04/02/2010 2349
Ethylbenzene	ND		1	0.50	0.17	ug/L	04/02/2010 2349
2-Hexanone	ND		1	10	0.27	ug/L	04/02/2010 2349
Isopropylbenzene	ND		1	0.50	0.029	ug/L	04/02/2010 2349
Methyl acetate	ND		1	1.0	0.30	ug/L	04/02/2010 2349
Methyl tertiary butyl ether (MTBE)	ND		1	0.50	0.019	ug/L	04/02/2010 2349
4-Methyl-2-pentanone	ND		1	10	0.31	ug/L	04/02/2010 2349
Methylcyclohexane	ND		1	5.0	0.95	ug/L	04/02/2010 2349
Methylene chloride	ND		1	0.50	0.17	ug/L	04/02/2010 2349
Styrene	ND		1	0.50	0.015	ug/L	04/02/2010 2349
1,1,2,2-Tetrachloroethane	ND		1	0.50	0.013	ug/L	04/02/2010 2349
Tetrachloroethene	ND		1	0.50	0.014	ug/L	04/02/2010 2349
Toluene	ND		1	0.50	0.17	ug/L	04/02/2010 2349
1,1,2-Trichloro-1,2,2-Trifluoroethane	ND		1	0.50	0.30	ug/L	04/02/2010 2349
1,2,4-Trichlorobenzene	ND		1	0.50	0.17	ug/L	04/02/2010 2349
1,1,2-Trichloroethane	ND		1	0.50	0.031	ug/L	04/02/2010 2349
1,1,1-Trichloroethane	ND		1	0.50	0.029	ug/L	04/02/2010 2349

PQL = Practical quantitation limit
ND = Not detected at or above the MDL
P = The RPD between two GC columns exceeds 40%
J = Estimated result < PQL and ≥ MDL
N - Recovery is out of criteria
+ - RPD is out of criteria

Where applicable, all soil sample analysis are reported on a dry weight basis unless flagged with a "W"

Note: Calculations are performed before rounding to avoid round-off errors in calculated results

Volatile Organic Compounds by GC/MS - MB

Sample ID: LQ30897-001
Batch: 30897
Analytical Method: 8260B

Matrix: Aqueous
Prep Method: 5030B

Parameter	Result	Q	Dil	PQL	MDL	Units	Analysis Date
Trichloroethene	ND		1	0.50	0.024	ug/L	04/02/2010 2349
Trichlorofluoromethane	ND		1	0.50	0.051	ug/L	04/02/2010 2349
Vinyl chloride	ND		1	0.50	0.065	ug/L	04/02/2010 2349
Xylenes (total)	ND		1	0.50	0.17	ug/L	04/02/2010 2349

Surrogate	Q	% Rec	Acceptance Limit
Bromofluorobenzene		101	70-130
1,2-Dichloroethane-d4		106	70-130
Toluene-d8		109	70-130

PQL = Practical quantitation limit
ND = Not detected at or above the MDL
P = The RPD between two GC columns exceeds 40%
J = Estimated result < PQL and ≥ MDL
N - Recovery is out of criteria
+ - RPD is out of criteria

Where applicable, all soil sample analysis are reported on a dry weight basis unless flagged with a "W"

Note: Calculations are performed before rounding to avoid round-off errors in calculated results

Volatile Organic Compounds by GC/MS - LCS

Sample ID: LQ30897-002
Batch: 30897
Analytical Method: 8260B

Matrix: Aqueous
Prep Method: 5030B

Parameter	Spike Amount (ug/L)	Result (ug/L)	Q	Dil	% Rec	% Rec Limit	Analysis Date
Acetone	40	47		1	117	46-153	04/02/2010 2220
Benzene	20	21		1	104	70-130	04/02/2010 2220
Bromodichloromethane	20	21		1	107	70-130	04/02/2010 2220
Bromoform	20	19		1	93	70-130	04/02/2010 2220
Bromomethane (Methyl bromide)	20	28		1	140	60-140	04/02/2010 2220
2-Butanone (MEK)	40	31		1	77	60-140	04/02/2010 2220
Carbon disulfide	20	19		1	95	60-140	04/02/2010 2220
Carbon tetrachloride	20	21		1	104	70-130	04/02/2010 2220
Chlorobenzene	20	21		1	103	70-130	04/02/2010 2220
Chloroethane	20	24		1	121	42-163	04/02/2010 2220
Chloroform	20	20		1	100	70-130	04/02/2010 2220
Chloromethane (Methyl chloride)	20	17		1	87	20-158	04/02/2010 2220
Cyclohexane	20	18		1	89	70-130	04/02/2010 2220
1,2-Dibromo-3-chloropropane (DBCP)	20	15		1	74	70-130	04/02/2010 2220
Dibromochloromethane	20	21		1	107	70-130	04/02/2010 2220
1,2-Dibromoethane (EDB)	20	20		1	101	70-130	04/02/2010 2220
1,3-Dichlorobenzene	20	20		1	102	70-130	04/02/2010 2220
1,2-Dichlorobenzene	20	21		1	103	70-130	04/02/2010 2220
1,4-Dichlorobenzene	20	20		1	102	70-130	04/02/2010 2220
Dichlorodifluoromethane	20	20		1	100	60-140	04/02/2010 2220
1,1-Dichloroethane	20	19		1	94	70-130	04/02/2010 2220
1,2-Dichloroethane	20	19		1	94	70-130	04/02/2010 2220
cis-1,2-Dichloroethene	20	19		1	96	70-130	04/02/2010 2220
1,1-Dichloroethene	20	19		1	95	70-130	04/02/2010 2220
trans-1,2-Dichloroethene	20	19		1	94	70-130	04/02/2010 2220
1,2-Dichloropropane	20	20		1	101	70-130	04/02/2010 2220
cis-1,3-Dichloropropene	20	21		1	103	70-130	04/02/2010 2220
trans-1,3-Dichloropropene	20	20		1	99	70-130	04/02/2010 2220
Ethylbenzene	20	21		1	104	70-130	04/02/2010 2220
2-Hexanone	40	33		1	83	60-140	04/02/2010 2220
Isopropylbenzene	20	21		1	105	70-130	04/02/2010 2220
Methyl acetate	20	16		1	79	15-128	04/02/2010 2220
Methyl tertiary butyl ether (MTBE)	20	18		1	90	70-130	04/02/2010 2220
4-Methyl-2-pentanone	40	32		1	81	60-140	04/02/2010 2220
Methylcyclohexane	20	21		1	103	70-130	04/02/2010 2220
Methylene chloride	20	19		1	93	70-130	04/02/2010 2220
Styrene	20	20		1	102	70-130	04/02/2010 2220
1,1,2,2-Tetrachloroethane	20	17		1	85	70-130	04/02/2010 2220
Tetrachloroethene	20	22		1	108	70-130	04/02/2010 2220
Toluene	20	21		1	106	70-130	04/02/2010 2220
1,1,2-Trichloro-1,2,2-Trifluoroethane	20	20		1	102	70-130	04/02/2010 2220
1,2,4-Trichlorobenzene	20	20		1	102	70-130	04/02/2010 2220
1,1,2-Trichloroethane	20	19		1	96	70-130	04/02/2010 2220
1,1,1-Trichloroethane	20	22		1	108	70-130	04/02/2010 2220

PQL = Practical quantitation limit
ND = Not detected at or above the MDL
P = The RPD between two GC columns exceeds 40%
J = Estimated result < PQL and ≥ MDL
N - Recovery is out of criteria
+ - RPD is out of criteria

Where applicable, all soil sample analysis are reported on a dry weight basis unless flagged with a "W"

Note: Calculations are performed before rounding to avoid round-off errors in calculated results

Volatile Organic Compounds by GC/MS - LCS

Sample ID: LQ30897-002
Batch: 30897
Analytical Method: 8260B

Matrix: Aqueous
Prep Method: 5030B

Parameter	Spike Amount (ug/L)	Result (ug/L)	Q	Dil	% Rec	% Rec Limit	Analysis Date
Trichloroethene	20	21		1	104	70-130	04/02/2010 2220
Trichlorofluoromethane	20	24		1	118	60-140	04/02/2010 2220
Vinyl chloride	20	21		1	103	60-140	04/02/2010 2220
Xylenes (total)	40	42		1	106	70-130	04/02/2010 2220

Surrogate	Q	% Rec	Acceptance Limit
Bromofluorobenzene		101	70-130
1,2-Dichloroethane-d4		104	70-130
Toluene-d8		108	70-130

PQL = Practical quantitation limit
ND = Not detected at or above the MDL
P = The RPD between two GC columns exceeds 40%
J = Estimated result < PQL and ≥ MDL
N - Recovery is out of criteria
+ - RPD is out of criteria

Where applicable, all soil sample analysis are reported on a dry weight basis unless flagged with a "W"

Note: Calculations are performed before rounding to avoid round-off errors in calculated results

Volatile Organic Compounds by GC/MS - LCSD

Sample ID: LQ30897-003
Batch: 30897
Analytical Method: 8260B

Matrix: Aqueous
Prep Method: 5030B

Parameter	Spike Amount (ug/L)	Result (ug/L)	Q	Dil	% Rec	% RPD	% Rec Limit	% RPD Limit	Analysis Date
Acetone	40	44		1	110	5.8	46-153	20	04/02/2010 2243
Benzene	20	20		1	101	2.7	70-130	20	04/02/2010 2243
Bromodichloromethane	20	21		1	105	1.9	70-130	20	04/02/2010 2243
Bromoform	20	18		1	89	4.0	70-130	20	04/02/2010 2243
Bromomethane (Methyl bromide)	20	27		1	135	3.4	60-140	20	04/02/2010 2243
2-Butanone (MEK)	40	30		1	74	3.8	60-140	20	04/02/2010 2243
Carbon disulfide	20	18		1	92	2.4	60-140	20	04/02/2010 2243
Carbon tetrachloride	20	21		1	103	1.5	70-130	20	04/02/2010 2243
Chlorobenzene	20	20		1	102	0.64	70-130	20	04/02/2010 2243
Chloroethane	20	24		1	120	1.3	42-163	20	04/02/2010 2243
Chloroform	20	19		1	96	3.3	70-130	20	04/02/2010 2243
Chloromethane (Methyl chloride)	20	18		1	92	5.8	20-158	20	04/02/2010 2243
Cyclohexane	20	18		1	90	0.90	70-130	20	04/02/2010 2243
1,2-Dibromo-3-chloropropane (DBCP)	20	14	N	1	68	9.3	70-130	20	04/02/2010 2243
Dibromochloromethane	20	21		1	104	2.9	70-130	20	04/02/2010 2243
1,2-Dibromoethane (EDB)	20	19		1	96	4.9	70-130	20	04/02/2010 2243
1,3-Dichlorobenzene	20	20		1	101	0.24	70-130	20	04/02/2010 2243
1,2-Dichlorobenzene	20	20		1	100	2.9	70-130	20	04/02/2010 2243
1,4-Dichlorobenzene	20	20		1	101	0.69	70-130	20	04/02/2010 2243
Dichlorodifluoromethane	20	20		1	100	0.48	60-140	20	04/02/2010 2243
1,1-Dichloroethane	20	19		1	93	1.5	70-130	20	04/02/2010 2243
1,2-Dichloroethane	20	19		1	93	0.93	70-130	20	04/02/2010 2243
cis-1,2-Dichloroethene	20	19		1	95	1.7	70-130	20	04/02/2010 2243
1,1-Dichloroethene	20	19		1	93	2.1	70-130	20	04/02/2010 2243
trans-1,2-Dichloroethene	20	18		1	91	2.9	70-130	20	04/02/2010 2243
1,2-Dichloropropane	20	20		1	98	2.2	70-130	20	04/02/2010 2243
cis-1,3-Dichloropropene	20	21		1	103	0.13	70-130	20	04/02/2010 2243
trans-1,3-Dichloropropene	20	19		1	93	6.0	70-130	20	04/02/2010 2243
Ethylbenzene	20	21		1	103	0.61	70-130	20	04/02/2010 2243
2-Hexanone	40	31		1	77	8.2	60-140	20	04/02/2010 2243
Isopropylbenzene	20	21		1	104	1.1	70-130	20	04/02/2010 2243
Methyl acetate	20	15		1	74	6.4	15-128	20	04/02/2010 2243
Methyl tertiary butyl ether (MTBE)	20	16		1	80	11	70-130	20	04/02/2010 2243
4-Methyl-2-pentanone	40	31		1	78	3.9	60-140	20	04/02/2010 2243
Methylcyclohexane	20	21		1	103	0.11	70-130	20	04/02/2010 2243
Methylene chloride	20	18		1	90	3.8	70-130	20	04/02/2010 2243
Styrene	20	20		1	102	0.33	70-130	20	04/02/2010 2243
1,1,2,2-Tetrachloroethane	20	16		1	81	4.4	70-130	20	04/02/2010 2243
Tetrachloroethene	20	21		1	107	1.1	70-130	20	04/02/2010 2243
Toluene	20	21		1	104	1.4	70-130	20	04/02/2010 2243
1,1,2-Trichloro-1,2,2-Trifluoroethane	20	20		1	102	0.22	70-130	20	04/02/2010 2243
1,2,4-Trichlorobenzene	20	20		1	99	2.7	70-130	20	04/02/2010 2243
1,1,2-Trichloroethane	20	18		1	91	4.7	70-130	20	04/02/2010 2243
1,1,1-Trichloroethane	20	21		1	106	1.9	70-130	20	04/02/2010 2243

PQL = Practical quantitation limit
ND = Not detected at or above the MDL
P = The RPD between two GC columns exceeds 40%
J = Estimated result < PQL and ≥ MDL
N - Recovery is out of criteria
+ - RPD is out of criteria

Where applicable, all soil sample analysis are reported on a dry weight basis unless flagged with a "W"

Note: Calculations are performed before rounding to avoid round-off errors in calculated results

Volatile Organic Compounds by GC/MS - LCSD

Sample ID: LQ30897-003
Batch: 30897
Analytical Method: 8260B

Matrix: Aqueous
Prep Method: 5030B

Parameter	Spike Amount (ug/L)	Result (ug/L)	Q	Dil	% Rec	% RPD	% Rec Limit	% RPD Limit	Analysis Date
Trichloroethene	20	21		1	104	0.68	70-130	20	04/02/2010 2243
Trichlorofluoromethane	20	23		1	116	2.1	60-140	20	04/02/2010 2243
Vinyl chloride	20	21		1	106	2.5	60-140	20	04/02/2010 2243
Xylenes (total)	40	42		1	105	0.84	70-130	20	04/02/2010 2243

Surrogate	Q	% Rec	Acceptance Limit
Bromofluorobenzene		101	70-130
1,2-Dichloroethane-d4		103	70-130
Toluene-d8		110	70-130

PQL = Practical quantitation limit
ND = Not detected at or above the MDL
P = The RPD between two GC columns exceeds 40%
J = Estimated result < PQL and ≥ MDL
N - Recovery is out of criteria
+ - RPD is out of criteria

Where applicable, all soil sample analysis are reported on a dry weight basis unless flagged with a "W"

Note: Calculations are performed before rounding to avoid round-off errors in calculated results

Volatile Organic Compounds by GC/MS - MB

Sample ID: LQ30899-001
Batch: 30899
Analytical Method: 8260B

Matrix: Aqueous
Prep Method: 5030B

Parameter	Result	Q	Dil	PQL	MDL	Units	Analysis Date
Acetone	ND		1	10	0.061	ug/L	04/02/2010 1527
Benzene	ND		1	0.50	0.027	ug/L	04/02/2010 1527
Bromodichloromethane	ND		1	0.50	0.17	ug/L	04/02/2010 1527
Bromoform	ND		1	0.50	0.010	ug/L	04/02/2010 1527
Bromomethane (Methyl bromide)	ND		1	0.50	0.20	ug/L	04/02/2010 1527
2-Butanone (MEK)	ND		1	10	2.0	ug/L	04/02/2010 1527
Carbon disulfide	ND		1	0.50	0.097	ug/L	04/02/2010 1527
Carbon tetrachloride	ND		1	0.50	0.085	ug/L	04/02/2010 1527
Chlorobenzene	ND		1	0.50	0.17	ug/L	04/02/2010 1527
Chloroethane	ND		1	0.50	0.17	ug/L	04/02/2010 1527
Chloroform	ND		1	0.50	0.17	ug/L	04/02/2010 1527
Chloromethane (Methyl chloride)	ND		1	0.50	0.17	ug/L	04/02/2010 1527
Cyclohexane	ND		1	0.50	0.30	ug/L	04/02/2010 1527
1,2-Dibromo-3-chloropropane (DBCP)	ND		1	0.50	0.069	ug/L	04/02/2010 1527
Dibromochloromethane	ND		1	0.50	0.17	ug/L	04/02/2010 1527
1,2-Dibromoethane (EDB)	ND		1	0.50	0.061	ug/L	04/02/2010 1527
1,2-Dichlorobenzene	ND		1	0.50	0.17	ug/L	04/02/2010 1527
1,4-Dichlorobenzene	ND		1	0.50	0.17	ug/L	04/02/2010 1527
1,3-Dichlorobenzene	ND		1	0.50	0.17	ug/L	04/02/2010 1527
Dichlorodifluoromethane	ND		1	0.50	0.071	ug/L	04/02/2010 1527
1,1-Dichloroethane	ND		1	0.50	0.054	ug/L	04/02/2010 1527
1,2-Dichloroethane	ND		1	0.50	0.023	ug/L	04/02/2010 1527
1,1-Dichloroethene	ND		1	0.50	0.094	ug/L	04/02/2010 1527
trans-1,2-Dichloroethene	ND		1	0.50	0.079	ug/L	04/02/2010 1527
cis-1,2-Dichloroethene	ND		1	0.50	0.087	ug/L	04/02/2010 1527
1,2-Dichloropropane	ND		1	0.50	0.081	ug/L	04/02/2010 1527
trans-1,3-Dichloropropene	ND		1	0.50	0.18	ug/L	04/02/2010 1527
cis-1,3-Dichloropropene	ND		1	0.50	0.090	ug/L	04/02/2010 1527
Ethylbenzene	ND		1	0.50	0.17	ug/L	04/02/2010 1527
2-Hexanone	ND		1	10	0.27	ug/L	04/02/2010 1527
Isopropylbenzene	ND		1	0.50	0.029	ug/L	04/02/2010 1527
Methyl acetate	ND		1	1.0	0.30	ug/L	04/02/2010 1527
Methyl tertiary butyl ether (MTBE)	ND		1	0.50	0.019	ug/L	04/02/2010 1527
4-Methyl-2-pentanone	ND		1	10	0.31	ug/L	04/02/2010 1527
Methylcyclohexane	ND		1	5.0	0.95	ug/L	04/02/2010 1527
Methylene chloride	0.24	J	1	0.50	0.17	ug/L	04/02/2010 1527
Styrene	ND		1	0.50	0.015	ug/L	04/02/2010 1527
1,1,2,2-Tetrachloroethane	ND		1	0.50	0.013	ug/L	04/02/2010 1527
Tetrachloroethene	ND		1	0.50	0.014	ug/L	04/02/2010 1527
Toluene	ND		1	0.50	0.17	ug/L	04/02/2010 1527
1,1,2-Trichloro-1,2,2-Trifluoroethane	ND		1	0.50	0.30	ug/L	04/02/2010 1527
1,2,4-Trichlorobenzene	ND		1	0.50	0.17	ug/L	04/02/2010 1527
1,1,1-Trichloroethane	ND		1	0.50	0.029	ug/L	04/02/2010 1527
1,1,2-Trichloroethane	ND		1	0.50	0.031	ug/L	04/02/2010 1527

PQL = Practical quantitation limit
ND = Not detected at or above the MDL
P = The RPD between two GC columns exceeds 40%
J = Estimated result < PQL and ≥ MDL
N - Recovery is out of criteria
+ - RPD is out of criteria

Where applicable, all soil sample analysis are reported on a dry weight basis unless flagged with a "W"

Note: Calculations are performed before rounding to avoid round-off errors in calculated results

Volatile Organic Compounds by GC/MS - MB

Sample ID: LQ30899-001
Batch: 30899
Analytical Method: 8260B

Matrix: Aqueous
Prep Method: 5030B

Parameter	Result	Q	Dil	PQL	MDL	Units	Analysis Date
Trichloroethene	ND		1	0.50	0.024	ug/L	04/02/2010 1527
Trichlorofluoromethane	ND		1	0.50	0.051	ug/L	04/02/2010 1527
Vinyl chloride	ND		1	0.50	0.065	ug/L	04/02/2010 1527
Xylenes (total)	ND		1	0.50	0.17	ug/L	04/02/2010 1527

Surrogate	Q	% Rec	Acceptance Limit
Bromofluorobenzene		95	70-130
1,2-Dichloroethane-d4		109	70-130
Toluene-d8		106	70-130

PQL = Practical quantitation limit
ND = Not detected at or above the MDL
P = The RPD between two GC columns exceeds 40%
J = Estimated result < PQL and ≥ MDL
N - Recovery is out of criteria
+ - RPD is out of criteria

Where applicable, all soil sample analysis are reported on a dry weight basis unless flagged with a "W"

Note: Calculations are performed before rounding to avoid round-off errors in calculated results

Volatile Organic Compounds by GC/MS - LCS

Sample ID: LQ30899-002
Batch: 30899
Analytical Method: 8260B

Matrix: Aqueous
Prep Method: 5030B

Parameter	Spike Amount (ug/L)	Result (ug/L)	Q	Dil	% Rec	% Rec Limit	Analysis Date
Acetone	100	110		1	105	46-153	04/02/2010 1359
Benzene	50	50		1	101	70-130	04/02/2010 1359
Bromodichloromethane	50	47		1	95	70-130	04/02/2010 1359
Bromoform	50	46		1	91	70-130	04/02/2010 1359
Bromomethane (Methyl bromide)	50	46		1	92	60-140	04/02/2010 1359
2-Butanone (MEK)	100	97		1	97	60-140	04/02/2010 1359
Carbon disulfide	50	59		1	118	60-140	04/02/2010 1359
Carbon tetrachloride	50	54		1	108	70-130	04/02/2010 1359
Chlorobenzene	50	50		1	99	70-130	04/02/2010 1359
Chloroethane	50	41		1	83	42-163	04/02/2010 1359
Chloroform	50	52		1	105	70-130	04/02/2010 1359
Chloromethane (Methyl chloride)	50	39		1	79	20-158	04/02/2010 1359
Cyclohexane	50	53		1	106	70-130	04/02/2010 1359
1,2-Dibromo-3-chloropropane (DBCP)	50	49		1	98	70-130	04/02/2010 1359
Dibromochloromethane	50	45		1	91	70-130	04/02/2010 1359
1,2-Dibromoethane (EDB)	50	46		1	93	70-130	04/02/2010 1359
1,2-Dichlorobenzene	50	50		1	101	70-130	04/02/2010 1359
1,4-Dichlorobenzene	50	49		1	99	70-130	04/02/2010 1359
1,3-Dichlorobenzene	50	50		1	101	70-130	04/02/2010 1359
Dichlorodifluoromethane	50	48		1	96	60-140	04/02/2010 1359
1,1-Dichloroethane	50	51		1	103	70-130	04/02/2010 1359
1,2-Dichloroethane	50	53		1	106	70-130	04/02/2010 1359
1,1-Dichloroethene	50	49		1	98	70-130	04/02/2010 1359
trans-1,2-Dichloroethene	50	50		1	101	70-130	04/02/2010 1359
cis-1,2-Dichloroethene	50	50		1	101	70-130	04/02/2010 1359
1,2-Dichloropropane	50	51		1	103	70-130	04/02/2010 1359
trans-1,3-Dichloropropene	50	47		1	94	70-130	04/02/2010 1359
cis-1,3-Dichloropropene	50	48		1	97	70-130	04/02/2010 1359
Ethylbenzene	50	51		1	102	70-130	04/02/2010 1359
2-Hexanone	100	100		1	104	60-140	04/02/2010 1359
Isopropylbenzene	50	56		1	111	70-130	04/02/2010 1359
Methyl acetate	50	52		1	105	15-128	04/02/2010 1359
Methyl tertiary butyl ether (MTBE)	50	54		1	107	70-130	04/02/2010 1359
4-Methyl-2-pentanone	100	110		1	106	60-140	04/02/2010 1359
Methylcyclohexane	50	52		1	104	70-130	04/02/2010 1359
Methylene chloride	50	47		1	94	70-130	04/02/2010 1359
Styrene	50	44		1	89	70-130	04/02/2010 1359
1,1,2,2-Tetrachloroethane	50	53		1	107	70-130	04/02/2010 1359
Tetrachloroethene	50	48		1	97	70-130	04/02/2010 1359
Toluene	50	51		1	103	70-130	04/02/2010 1359
1,1,2-Trichloro-1,2,2-Trifluoroethane	50	49		1	97	70-130	04/02/2010 1359
1,2,4-Trichlorobenzene	50	55		1	111	70-130	04/02/2010 1359
1,1,1-Trichloroethane	50	54		1	108	70-130	04/02/2010 1359
1,1,2-Trichloroethane	50	48		1	97	70-130	04/02/2010 1359

PQL = Practical quantitation limit
ND = Not detected at or above the MDL
P = The RPD between two GC columns exceeds 40%
J = Estimated result < PQL and ≥ MDL
N - Recovery is out of criteria
+ - RPD is out of criteria

Where applicable, all soil sample analysis are reported on a dry weight basis unless flagged with a "W"

Note: Calculations are performed before rounding to avoid round-off errors in calculated results

Volatile Organic Compounds by GC/MS - LCS

Sample ID: LQ30899-002
Batch: 30899
Analytical Method: 8260B

Matrix: Aqueous
Prep Method: 5030B

Parameter	Spike Amount (ug/L)	Result (ug/L)	Q	Dil	% Rec	% Rec Limit	Analysis Date
Trichloroethene	50	49		1	99	70-130	04/02/2010 1359
Trichlorofluoromethane	50	49		1	98	60-140	04/02/2010 1359
Vinyl chloride	50	45		1	91	60-140	04/02/2010 1359
Xylenes (total)	100	98		1	98	70-130	04/02/2010 1359

Surrogate	Q	% Rec	Acceptance Limit
Bromofluorobenzene		101	70-130
1,2-Dichloroethane-d4		106	70-130
Toluene-d8		108	70-130

PQL = Practical quantitation limit
ND = Not detected at or above the MDL
P = The RPD between two GC columns exceeds 40%
J = Estimated result < PQL and ≥ MDL
N - Recovery is out of criteria
+ - RPD is out of criteria

Where applicable, all soil sample analysis are reported on a dry weight basis unless flagged with a "W"

Note: Calculations are performed before rounding to avoid round-off errors in calculated results

Volatile Organic Compounds by GC/MS - LCSD

Sample ID: LQ30899-003
Batch: 30899
Analytical Method: 8260B

Matrix: Aqueous
Prep Method: 5030B

Parameter	Spike Amount (ug/L)	Result (ug/L)	Q	Dil	% Rec	% RPD	% Rec Limit	% RPD Limit	Analysis Date
Acetone	100	100		1	105	0.43	46-153	20	04/02/2010 1421
Benzene	50	49		1	99	1.9	70-130	20	04/02/2010 1421
Bromodichloromethane	50	48		1	95	0.65	70-130	20	04/02/2010 1421
Bromoform	50	46		1	92	0.37	70-130	20	04/02/2010 1421
Bromomethane (Methyl bromide)	50	36	+	1	72	24	60-140	20	04/02/2010 1421
2-Butanone (MEK)	100	100		1	101	3.9	60-140	20	04/02/2010 1421
Carbon disulfide	50	56		1	112	4.7	60-140	20	04/02/2010 1421
Carbon tetrachloride	50	52		1	103	4.9	70-130	20	04/02/2010 1421
Chlorobenzene	50	49		1	98	1.7	70-130	20	04/02/2010 1421
Chloroethane	50	38		1	75	9.4	42-163	20	04/02/2010 1421
Chloroform	50	50		1	100	4.4	70-130	20	04/02/2010 1421
Chloromethane (Methyl chloride)	50	38		1	76	3.9	20-158	20	04/02/2010 1421
Cyclohexane	50	50		1	100	5.0	70-130	20	04/02/2010 1421
1,2-Dibromo-3-chloropropane (DBCP)	50	48		1	97	0.59	70-130	20	04/02/2010 1421
Dibromochloromethane	50	45		1	90	0.54	70-130	20	04/02/2010 1421
1,2-Dibromoethane (EDB)	50	47		1	94	1.1	70-130	20	04/02/2010 1421
1,2-Dichlorobenzene	50	50		1	100	1.1	70-130	20	04/02/2010 1421
1,4-Dichlorobenzene	50	50		1	99	0.63	70-130	20	04/02/2010 1421
1,3-Dichlorobenzene	50	51		1	101	0.60	70-130	20	04/02/2010 1421
Dichlorodifluoromethane	50	46		1	93	3.4	60-140	20	04/02/2010 1421
1,1-Dichloroethane	50	49		1	98	4.4	70-130	20	04/02/2010 1421
1,2-Dichloroethane	50	51		1	102	3.6	70-130	20	04/02/2010 1421
1,1-Dichloroethene	50	47		1	94	3.3	70-130	20	04/02/2010 1421
trans-1,2-Dichloroethene	50	48		1	96	5.2	70-130	20	04/02/2010 1421
cis-1,2-Dichloroethene	50	49		1	98	2.8	70-130	20	04/02/2010 1421
1,2-Dichloropropane	50	52		1	104	1.3	70-130	20	04/02/2010 1421
trans-1,3-Dichloropropene	50	47		1	93	0.42	70-130	20	04/02/2010 1421
cis-1,3-Dichloropropene	50	49		1	99	2.0	70-130	20	04/02/2010 1421
Ethylbenzene	50	50		1	100	1.7	70-130	20	04/02/2010 1421
2-Hexanone	100	110		1	110	6.1	60-140	20	04/02/2010 1421
Isopropylbenzene	50	55		1	111	0.33	70-130	20	04/02/2010 1421
Methyl acetate	50	52		1	105	0.27	15-128	20	04/02/2010 1421
Methyl tertiary butyl ether (MTBE)	50	52		1	105	2.3	70-130	20	04/02/2010 1421
4-Methyl-2-pentanone	100	110		1	113	6.9	60-140	20	04/02/2010 1421
Methylcyclohexane	50	51		1	102	1.4	70-130	20	04/02/2010 1421
Methylene chloride	50	45		1	90	4.4	70-130	20	04/02/2010 1421
Styrene	50	44		1	89	0.36	70-130	20	04/02/2010 1421
1,1,2,2-Tetrachloroethane	50	56		1	113	5.3	70-130	20	04/02/2010 1421
Tetrachloroethene	50	47		1	94	3.2	70-130	20	04/02/2010 1421
Toluene	50	53		1	105	2.5	70-130	20	04/02/2010 1421
1,1,2-Trichloro-1,2,2-Trifluoroethane	50	48		1	96	1.1	70-130	20	04/02/2010 1421
1,2,4-Trichlorobenzene	50	52		1	104	5.9	70-130	20	04/02/2010 1421
1,1,1-Trichloroethane	50	52		1	104	3.9	70-130	20	04/02/2010 1421
1,1,2-Trichloroethane	50	48		1	97	0.15	70-130	20	04/02/2010 1421

PQL = Practical quantitation limit
ND = Not detected at or above the MDL
P = The RPD between two GC columns exceeds 40%
J = Estimated result < PQL and ≥ MDL
N - Recovery is out of criteria
+ - RPD is out of criteria

Where applicable, all soil sample analysis are reported on a dry weight basis unless flagged with a "W"

Note: Calculations are performed before rounding to avoid round-off errors in calculated results

Volatile Organic Compounds by GC/MS - LCSD

Sample ID: LQ30899-003
Batch: 30899
Analytical Method: 8260B

Matrix: Aqueous
Prep Method: 5030B

Parameter	Spike Amount (ug/L)	Result (ug/L)	Q	Dil	% Rec	% RPD	% Rec Limit	% RPD Limit	Analysis Date
Trichloroethene	50	50		1	99	0.24	70-130	20	04/02/2010 1421
Trichlorofluoromethane	50	47		1	93	5.2	60-140	20	04/02/2010 1421
Vinyl chloride	50	46		1	91	0.91	60-140	20	04/02/2010 1421
Xylenes (total)	100	96		1	96	1.3	70-130	20	04/02/2010 1421

Surrogate	Q	% Rec	Acceptance Limit
Bromofluorobenzene		100	70-130
1,2-Dichloroethane-d4		105	70-130
Toluene-d8		109	70-130

PQL = Practical quantitation limit
ND = Not detected at or above the MDL
P = The RPD between two GC columns exceeds 40%
J = Estimated result < PQL and ≥ MDL
N - Recovery is out of criteria
+ - RPD is out of criteria

Where applicable, all soil sample analysis are reported on a dry weight basis unless flagged with a "W"

Note: Calculations are performed before rounding to avoid round-off errors in calculated results

Volatile Organic Compounds by GC/MS - MB

Sample ID: LQ31061-001
Batch: 31061
Analytical Method: 8260B

Matrix: Aqueous
Prep Method: 5030B

Parameter	Result	Q	Dil	PQL	MDL	Units	Analysis Date
Acetone	ND		1	10	0.061	ug/L	04/07/2010 1123
Benzene	ND		1	0.50	0.027	ug/L	04/07/2010 1123
Bromodichloromethane	ND		1	0.50	0.17	ug/L	04/07/2010 1123
Bromoform	ND		1	0.50	0.010	ug/L	04/07/2010 1123
Bromomethane (Methyl bromide)	ND		1	0.50	0.20	ug/L	04/07/2010 1123
2-Butanone (MEK)	ND		1	10	2.0	ug/L	04/07/2010 1123
Carbon disulfide	ND		1	0.50	0.097	ug/L	04/07/2010 1123
Carbon tetrachloride	ND		1	0.50	0.085	ug/L	04/07/2010 1123
Chlorobenzene	ND		1	0.50	0.17	ug/L	04/07/2010 1123
Chloroethane	ND		1	0.50	0.17	ug/L	04/07/2010 1123
Chloroform	ND		1	0.50	0.17	ug/L	04/07/2010 1123
Chloromethane (Methyl chloride)	ND		1	0.50	0.17	ug/L	04/07/2010 1123
Cyclohexane	ND		1	0.50	0.30	ug/L	04/07/2010 1123
1,2-Dibromo-3-chloropropane (DBCP)	ND		1	0.50	0.069	ug/L	04/07/2010 1123
Dibromochloromethane	ND		1	0.50	0.17	ug/L	04/07/2010 1123
1,2-Dibromoethane (EDB)	ND		1	0.50	0.061	ug/L	04/07/2010 1123
1,4-Dichlorobenzene	ND		1	0.50	0.17	ug/L	04/07/2010 1123
1,2-Dichlorobenzene	ND		1	0.50	0.17	ug/L	04/07/2010 1123
1,3-Dichlorobenzene	ND		1	0.50	0.17	ug/L	04/07/2010 1123
Dichlorodifluoromethane	ND		1	0.50	0.071	ug/L	04/07/2010 1123
1,2-Dichloroethane	ND		1	0.50	0.023	ug/L	04/07/2010 1123
1,1-Dichloroethane	ND		1	0.50	0.054	ug/L	04/07/2010 1123
trans-1,2-Dichloroethene	ND		1	0.50	0.079	ug/L	04/07/2010 1123
1,1-Dichloroethene	ND		1	0.50	0.094	ug/L	04/07/2010 1123
cis-1,2-Dichloroethene	ND		1	0.50	0.087	ug/L	04/07/2010 1123
1,2-Dichloropropane	ND		1	0.50	0.081	ug/L	04/07/2010 1123
cis-1,3-Dichloropropene	ND		1	0.50	0.090	ug/L	04/07/2010 1123
trans-1,3-Dichloropropene	ND		1	0.50	0.18	ug/L	04/07/2010 1123
Ethylbenzene	ND		1	0.50	0.17	ug/L	04/07/2010 1123
2-Hexanone	ND		1	10	0.27	ug/L	04/07/2010 1123
Isopropylbenzene	ND		1	0.50	0.029	ug/L	04/07/2010 1123
Methyl acetate	ND		1	1.0	0.30	ug/L	04/07/2010 1123
Methyl tertiary butyl ether (MTBE)	ND		1	0.50	0.019	ug/L	04/07/2010 1123
4-Methyl-2-pentanone	ND		1	10	0.31	ug/L	04/07/2010 1123
Methylcyclohexane	ND		1	5.0	0.95	ug/L	04/07/2010 1123
Methylene chloride	0.17	J	1	0.50	0.17	ug/L	04/07/2010 1123
Styrene	ND		1	0.50	0.015	ug/L	04/07/2010 1123
1,1,2,2-Tetrachloroethane	ND		1	0.50	0.013	ug/L	04/07/2010 1123
Tetrachloroethene	ND		1	0.50	0.014	ug/L	04/07/2010 1123
Toluene	ND		1	0.50	0.17	ug/L	04/07/2010 1123
1,1,2-Trichloro-1,2,2-Trifluoroethane	ND		1	0.50	0.30	ug/L	04/07/2010 1123
1,2,4-Trichlorobenzene	ND		1	0.50	0.17	ug/L	04/07/2010 1123
1,1,1-Trichloroethane	ND		1	0.50	0.029	ug/L	04/07/2010 1123
1,1,2-Trichloroethane	ND		1	0.50	0.031	ug/L	04/07/2010 1123

PQL = Practical quantitation limit
ND = Not detected at or above the MDL
P = The RPD between two GC columns exceeds 40%
J = Estimated result < PQL and ≥ MDL
N - Recovery is out of criteria
+ - RPD is out of criteria

Where applicable, all soil sample analysis are reported on a dry weight basis unless flagged with a "W"

Note: Calculations are performed before rounding to avoid round-off errors in calculated results

Volatile Organic Compounds by GC/MS - MB

Sample ID: LQ31061-001
Batch: 31061
Analytical Method: 8260B

Matrix: Aqueous
Prep Method: 5030B

Parameter	Result	Q	Dil	PQL	MDL	Units	Analysis Date
Trichloroethene	ND		1	0.50	0.024	ug/L	04/07/2010 1123
Trichlorofluoromethane	ND		1	0.50	0.051	ug/L	04/07/2010 1123
Vinyl chloride	ND		1	0.50	0.065	ug/L	04/07/2010 1123
Xylenes (total)	ND		1	0.50	0.17	ug/L	04/07/2010 1123

Surrogate	Q	% Rec	Acceptance Limit
Bromofluorobenzene		100	70-130
1,2-Dichloroethane-d4		96	70-130
Toluene-d8		102	70-130

PQL = Practical quantitation limit
ND = Not detected at or above the MDL
P = The RPD between two GC columns exceeds 40%
J = Estimated result < PQL and ≥ MDL
N - Recovery is out of criteria
+ - RPD is out of criteria

Where applicable, all soil sample analysis are reported on a dry weight basis unless flagged with a "W"

Note: Calculations are performed before rounding to avoid round-off errors in calculated results

Volatile Organic Compounds by GC/MS - LCS

Sample ID: LQ31061-002
Batch: 31061
Analytical Method: 8260B

Matrix: Aqueous
Prep Method: 5030B

Parameter	Spike Amount (ug/L)	Result (ug/L)	Q	Dil	% Rec	% Rec Limit	Analysis Date
Acetone	100	110		1	108	46-153	04/07/2010 0958
Benzene	50	48		1	96	70-130	04/07/2010 0958
Bromodichloromethane	50	50		1	100	70-130	04/07/2010 0958
Bromoform	50	46		1	91	70-130	04/07/2010 0958
Bromomethane (Methyl bromide)	50	43		1	85	60-140	04/07/2010 0958
2-Butanone (MEK)	100	100		1	100	60-140	04/07/2010 0958
Carbon disulfide	50	48		1	96	60-140	04/07/2010 0958
Carbon tetrachloride	50	47		1	94	70-130	04/07/2010 0958
Chlorobenzene	50	49		1	99	70-130	04/07/2010 0958
Chloroethane	50	44		1	88	42-163	04/07/2010 0958
Chloroform	50	47		1	94	70-130	04/07/2010 0958
Chloromethane (Methyl chloride)	50	41		1	83	20-158	04/07/2010 0958
Cyclohexane	50	50		1	100	70-130	04/07/2010 0958
1,2-Dibromo-3-chloropropane (DBCP)	50	50		1	99	70-130	04/07/2010 0958
Dibromochloromethane	50	47		1	94	70-130	04/07/2010 0958
1,2-Dibromoethane (EDB)	50	53		1	106	70-130	04/07/2010 0958
1,4-Dichlorobenzene	50	49		1	99	70-130	04/07/2010 0958
1,2-Dichlorobenzene	50	51		1	102	70-130	04/07/2010 0958
1,3-Dichlorobenzene	50	49		1	99	70-130	04/07/2010 0958
Dichlorodifluoromethane	50	51		1	103	60-140	04/07/2010 0958
1,2-Dichloroethane	50	48		1	96	70-130	04/07/2010 0958
1,1-Dichloroethane	50	46		1	92	70-130	04/07/2010 0958
trans-1,2-Dichloroethene	50	47		1	93	70-130	04/07/2010 0958
1,1-Dichloroethene	50	46		1	93	70-130	04/07/2010 0958
cis-1,2-Dichloroethene	50	46		1	92	70-130	04/07/2010 0958
1,2-Dichloropropane	50	49		1	98	70-130	04/07/2010 0958
cis-1,3-Dichloropropene	50	52		1	104	70-130	04/07/2010 0958
trans-1,3-Dichloropropene	50	53		1	106	70-130	04/07/2010 0958
Ethylbenzene	50	50		1	101	70-130	04/07/2010 0958
2-Hexanone	100	110		1	108	60-140	04/07/2010 0958
Isopropylbenzene	50	50		1	100	70-130	04/07/2010 0958
Methyl acetate	50	51		1	102	15-128	04/07/2010 0958
Methyl tertiary butyl ether (MTBE)	50	48		1	97	70-130	04/07/2010 0958
4-Methyl-2-pentanone	100	100		1	101	60-140	04/07/2010 0958
Methylcyclohexane	50	49		1	98	70-130	04/07/2010 0958
Methylene chloride	50	43		1	86	70-130	04/07/2010 0958
Styrene	50	56		1	112	70-130	04/07/2010 0958
1,1,2,2-Tetrachloroethane	50	51		1	103	70-130	04/07/2010 0958
Tetrachloroethene	50	48		1	97	70-130	04/07/2010 0958
Toluene	50	49		1	98	70-130	04/07/2010 0958
1,1,2-Trichloro-1,2,2-Trifluoroethane	50	44		1	88	70-130	04/07/2010 0958
1,2,4-Trichlorobenzene	50	51		1	103	70-130	04/07/2010 0958
1,1,1-Trichloroethane	50	47		1	93	70-130	04/07/2010 0958
1,1,2-Trichloroethane	50	50		1	99	70-130	04/07/2010 0958

PQL = Practical quantitation limit
ND = Not detected at or above the MDL
P = The RPD between two GC columns exceeds 40%
J = Estimated result < PQL and ≥ MDL
N - Recovery is out of criteria
+ - RPD is out of criteria

Where applicable, all soil sample analysis are reported on a dry weight basis unless flagged with a "W"

Note: Calculations are performed before rounding to avoid round-off errors in calculated results

Volatile Organic Compounds by GC/MS - LCS

Sample ID: LQ31061-002
Batch: 31061
Analytical Method: 8260B

Matrix: Aqueous
Prep Method: 5030B

Parameter	Spike Amount (ug/L)	Result (ug/L)	Q	Dil	% Rec	% Rec Limit	Analysis Date
Trichloroethene	50	47		1	95	70-130	04/07/2010 0958
Trichlorofluoromethane	50	46		1	93	60-140	04/07/2010 0958
Vinyl chloride	50	48		1	96	60-140	04/07/2010 0958
Xylenes (total)	100	100		1	103	70-130	04/07/2010 0958

Surrogate	Q	% Rec	Acceptance Limit
Bromofluorobenzene		100	70-130
1,2-Dichloroethane-d4		98	70-130
Toluene-d8		102	70-130

PQL = Practical quantitation limit
ND = Not detected at or above the MDL
P = The RPD between two GC columns exceeds 40%
J = Estimated result < PQL and ≥ MDL
N - Recovery is out of criteria
+ - RPD is out of criteria

Where applicable, all soil sample analysis are reported on a dry weight basis unless flagged with a "W"

Note: Calculations are performed before rounding to avoid round-off errors in calculated results

Volatile Organic Compounds by GC/MS - LCSD

Sample ID: LQ31061-003
Batch: 31061
Analytical Method: 8260B

Matrix: Aqueous
Prep Method: 5030B

Parameter	Spike Amount (ug/L)	Result (ug/L)	Q	Dil	% Rec	% RPD	% Rec Limit	% RPD Limit	Analysis Date
Acetone	100	90		1	90	18	46-153	20	04/07/2010 1019
Benzene	50	48		1	97	0.98	70-130	20	04/07/2010 1019
Bromodichloromethane	50	51		1	101	0.99	70-130	20	04/07/2010 1019
Bromoform	50	45		1	91	0.14	70-130	20	04/07/2010 1019
Bromomethane (Methyl bromide)	50	44		1	89	4.1	60-140	20	04/07/2010 1019
2-Butanone (MEK)	100	91		1	91	8.7	60-140	20	04/07/2010 1019
Carbon disulfide	50	49		1	98	2.0	60-140	20	04/07/2010 1019
Carbon tetrachloride	50	48		1	96	1.7	70-130	20	04/07/2010 1019
Chlorobenzene	50	50		1	100	0.96	70-130	20	04/07/2010 1019
Chloroethane	50	45		1	90	2.6	42-163	20	04/07/2010 1019
Chloroform	50	48		1	96	1.8	70-130	20	04/07/2010 1019
Chloromethane (Methyl chloride)	50	41		1	82	0.69	20-158	20	04/07/2010 1019
Cyclohexane	50	49		1	97	2.7	70-130	20	04/07/2010 1019
1,2-Dibromo-3-chloropropane (DBCP)	50	46		1	92	7.8	70-130	20	04/07/2010 1019
Dibromochloromethane	50	48		1	96	2.0	70-130	20	04/07/2010 1019
1,2-Dibromoethane (EDB)	50	53		1	107	0.34	70-130	20	04/07/2010 1019
1,4-Dichlorobenzene	50	50		1	100	1.8	70-130	20	04/07/2010 1019
1,2-Dichlorobenzene	50	50		1	101	1.1	70-130	20	04/07/2010 1019
1,3-Dichlorobenzene	50	50		1	101	1.8	70-130	20	04/07/2010 1019
Dichlorodifluoromethane	50	48		1	95	7.4	60-140	20	04/07/2010 1019
1,2-Dichloroethane	50	48		1	97	1.1	70-130	20	04/07/2010 1019
1,1-Dichloroethane	50	47		1	94	2.4	70-130	20	04/07/2010 1019
trans-1,2-Dichloroethene	50	48		1	96	3.0	70-130	20	04/07/2010 1019
1,1-Dichloroethene	50	47		1	95	2.2	70-130	20	04/07/2010 1019
cis-1,2-Dichloroethene	50	47		1	95	2.8	70-130	20	04/07/2010 1019
1,2-Dichloropropane	50	49		1	98	0.63	70-130	20	04/07/2010 1019
cis-1,3-Dichloropropene	50	52		1	104	0.13	70-130	20	04/07/2010 1019
trans-1,3-Dichloropropene	50	53		1	106	0.057	70-130	20	04/07/2010 1019
Ethylbenzene	50	51		1	102	1.1	70-130	20	04/07/2010 1019
2-Hexanone	100	100		1	103	4.7	60-140	20	04/07/2010 1019
Isopropylbenzene	50	52		1	104	4.8	70-130	20	04/07/2010 1019
Methyl acetate	50	50		1	99	3.0	15-128	20	04/07/2010 1019
Methyl tertiary butyl ether (MTBE)	50	48		1	96	0.94	70-130	20	04/07/2010 1019
4-Methyl-2-pentanone	100	98		1	98	3.4	60-140	20	04/07/2010 1019
Methylcyclohexane	50	49		1	98	0.31	70-130	20	04/07/2010 1019
Methylene chloride	50	44		1	88	2.3	70-130	20	04/07/2010 1019
Styrene	50	57		1	114	1.7	70-130	20	04/07/2010 1019
1,1,2,2-Tetrachloroethane	50	54		1	108	4.6	70-130	20	04/07/2010 1019
Tetrachloroethene	50	49		1	98	1.7	70-130	20	04/07/2010 1019
Toluene	50	50		1	99	1.6	70-130	20	04/07/2010 1019
1,1,2-Trichloro-1,2,2-Trifluoroethane	50	43		1	85	3.2	70-130	20	04/07/2010 1019
1,2,4-Trichlorobenzene	50	48		1	97	5.8	70-130	20	04/07/2010 1019
1,1,1-Trichloroethane	50	47		1	94	1.1	70-130	20	04/07/2010 1019
1,1,2-Trichloroethane	50	50		1	99	0.12	70-130	20	04/07/2010 1019

PQL = Practical quantitation limit
ND = Not detected at or above the MDL
P = The RPD between two GC columns exceeds 40%
J = Estimated result < PQL and ≥ MDL
N - Recovery is out of criteria
+ - RPD is out of criteria

Where applicable, all soil sample analysis are reported on a dry weight basis unless flagged with a "W"

Note: Calculations are performed before rounding to avoid round-off errors in calculated results

Volatile Organic Compounds by GC/MS - LCSD

Sample ID: LQ31061-003
Batch: 31061
Analytical Method: 8260B

Matrix: Aqueous
Prep Method: 5030B

Parameter	Spike Amount (ug/L)	Result (ug/L)	Q	Dil	% Rec	% RPD	% Rec Limit	% RPD Limit	Analysis Date
Trichloroethene	50	48		1	96	1.7	70-130	20	04/07/2010 1019
Trichlorofluoromethane	50	45		1	89	3.9	60-140	20	04/07/2010 1019
Vinyl chloride	50	47		1	95	1.5	60-140	20	04/07/2010 1019
Xylenes (total)	100	100		1	103	0.84	70-130	20	04/07/2010 1019

Surrogate	Q	% Rec	Acceptance Limit
Bromofluorobenzene		99	70-130
1,2-Dichloroethane-d4		98	70-130
Toluene-d8		103	70-130

PQL = Practical quantitation limit
ND = Not detected at or above the MDL
P = The RPD between two GC columns exceeds 40%
J = Estimated result < PQL and ≥ MDL
N - Recovery is out of criteria
+ - RPD is out of criteria

Where applicable, all soil sample analysis are reported on a dry weight basis unless flagged with a "W"

Note: Calculations are performed before rounding to avoid round-off errors in calculated results

Semivolatile Organic Compounds by GC/MS - MB

Sample ID: LQ30843-001
Batch: 30843
Analytical Method: 8270D

Matrix: Aqueous
Prep Method: 3520C
Prep Date: 04/02/2010 2357

Parameter	Result	Q	Dil	PQL	MDL	Units	Analysis Date
1,1'-Biphenyl	ND		1	1.0	0.20	ug/L	04/06/2010 1218
2,4,5-Trichlorophenol	ND		1	1.0	0.18	ug/L	04/06/2010 1218
2,4,6-Trichlorophenol	ND		1	1.0	0.22	ug/L	04/06/2010 1218
2,4-Dichlorophenol	ND		1	1.0	0.15	ug/L	04/06/2010 1218
2,4-Dimethylphenol	ND		1	1.0	0.31	ug/L	04/06/2010 1218
2,4-Dinitrophenol	ND		1	5.0	0.25	ug/L	04/06/2010 1218
2,4-Dinitrotoluene	ND		1	2.0	0.45	ug/L	04/06/2010 1218
2,6-Dinitrotoluene	ND		1	2.0	0.40	ug/L	04/06/2010 1218
2-Chloronaphthalene	ND		1	1.0	0.12	ug/L	04/06/2010 1218
2-Chlorophenol	ND		1	1.0	0.13	ug/L	04/06/2010 1218
2-Methylnaphthalene	ND		1	1.0	0.080	ug/L	04/06/2010 1218
2-Methylphenol	ND		1	1.0	0.17	ug/L	04/06/2010 1218
2-Nitroaniline	ND		1	2.0	0.55	ug/L	04/06/2010 1218
2-Nitrophenol	ND		1	2.0	0.27	ug/L	04/06/2010 1218
3 & 4-Methylphenol	ND		1	2.0	0.57	ug/L	04/06/2010 1218
3,3'-Dichlorobenzidine	ND		1	5.0	0.81	ug/L	04/06/2010 1218
3-Nitroaniline	ND		1	2.0	0.77	ug/L	04/06/2010 1218
4,6-Dinitro-2-methylphenol	ND		1	5.0	1.5	ug/L	04/06/2010 1218
4-Bromophenyl phenyl ether	ND		1	1.0	0.12	ug/L	04/06/2010 1218
4-Chloro-3-methyl phenol	ND		1	1.0	0.22	ug/L	04/06/2010 1218
4-Chloroaniline	ND		1	1.0	0.13	ug/L	04/06/2010 1218
4-Chlorophenyl phenyl ether	ND		1	1.0	0.11	ug/L	04/06/2010 1218
4-Nitroaniline	ND		1	2.0	0.39	ug/L	04/06/2010 1218
4-Nitrophenol	ND		1	5.0	0.64	ug/L	04/06/2010 1218
Acenaphthene	ND		1	1.0	0.090	ug/L	04/06/2010 1218
Acenaphthylene	ND		1	1.0	0.16	ug/L	04/06/2010 1218
Acetophenone	ND		1	1.0	0.32	ug/L	04/06/2010 1218
Anthracene	ND		1	1.0	0.13	ug/L	04/06/2010 1218
Atrazine	ND		1	1.0	0.20	ug/L	04/06/2010 1218
Benzaldehyde	ND		1	5.0	1.0	ug/L	04/06/2010 1218
Benzo(a)anthracene	ND		1	1.0	0.15	ug/L	04/06/2010 1218
Benzo(a)pyrene	ND		1	1.0	0.16	ug/L	04/06/2010 1218
Benzo(b)fluoranthene	ND		1	1.0	0.20	ug/L	04/06/2010 1218
Benzo(g,h,i)perylene	ND		1	1.0	0.23	ug/L	04/06/2010 1218
Benzo(k)fluoranthene	ND		1	1.0	0.12	ug/L	04/06/2010 1218
bis(2-Chloroethoxy)methane	ND		1	1.0	0.13	ug/L	04/06/2010 1218
bis(2-Chloroethyl)ether	ND		1	1.0	0.13	ug/L	04/06/2010 1218
bis(2-Chloroisopropyl)ether	ND		1	1.0	0.080	ug/L	04/06/2010 1218
bis(2-Ethylhexyl)phthalate	ND		1	5.0	1.7	ug/L	04/06/2010 1218
Butyl benzyl phthalate	ND		1	5.0	1.7	ug/L	04/06/2010 1218
Caprolactam	ND		1	5.0	1.2	ug/L	04/06/2010 1218
Carbazole	ND		1	1.0	0.25	ug/L	04/06/2010 1218
Chrysene	ND		1	1.0	0.12	ug/L	04/06/2010 1218
Di-n-butyl phthalate	ND		1	5.0	1.7	ug/L	04/06/2010 1218

PQL = Practical quantitation limit
ND = Not detected at or above the MDL
P = The RPD between two GC columns exceeds 40%
J = Estimated result < PQL and ≥ MDL
N - Recovery is out of criteria
+ - RPD is out of criteria

Where applicable, all soil sample analysis are reported on a dry weight basis unless flagged with a "W"

Note: Calculations are performed before rounding to avoid round-off errors in calculated results

Semivolatile Organic Compounds by GC/MS - MB

Sample ID: LQ30843-001
Batch: 30843
Analytical Method: 8270D

Matrix: Aqueous
Prep Method: 3520C
Prep Date: 04/02/2010 2357

Parameter	Result	Q	Dil	PQL	MDL	Units	Analysis Date
Di-n-octylphthalate	ND		1	5.0	1.7	ug/L	04/06/2010 1218
Dibenzo(a,h)anthracene	ND		1	1.0	0.13	ug/L	04/06/2010 1218
Dibenzofuran	ND		1	1.0	0.16	ug/L	04/06/2010 1218
Diethylphthalate	ND		1	5.0	1.7	ug/L	04/06/2010 1218
Dimethyl phthalate	ND		1	5.0	1.7	ug/L	04/06/2010 1218
Fluoranthene	ND		1	1.0	0.21	ug/L	04/06/2010 1218
Fluorene	ND		1	1.0	0.10	ug/L	04/06/2010 1218
Hexachlorobenzene	ND		1	1.0	0.21	ug/L	04/06/2010 1218
Hexachlorobutadiene	ND		1	1.0	0.090	ug/L	04/06/2010 1218
Hexachlorocyclopentadiene	ND		1	5.0	0.23	ug/L	04/06/2010 1218
Hexachloroethane	ND		1	1.0	0.11	ug/L	04/06/2010 1218
Indeno(1,2,3-c,d)pyrene	ND		1	1.0	0.23	ug/L	04/06/2010 1218
Isophorone	ND		1	1.0	0.080	ug/L	04/06/2010 1218
N-Nitrosodi-n-propylamine	ND		1	1.0	0.080	ug/L	04/06/2010 1218
N-Nitrosodiphenylamine (Diphenylamine)	ND		1	1.0	0.38	ug/L	04/06/2010 1218
Naphthalene	ND		1	1.0	0.070	ug/L	04/06/2010 1218
Nitrobenzene	ND		1	1.0	0.10	ug/L	04/06/2010 1218
Pentachlorophenol	ND		1	5.0	0.54	ug/L	04/06/2010 1218
Phenanthrene	ND		1	1.0	0.18	ug/L	04/06/2010 1218
Phenol	ND		1	1.0	0.11	ug/L	04/06/2010 1218
Pyrene	ND		1	1.0	0.16	ug/L	04/06/2010 1218

Surrogate	Q	% Rec	Acceptance Limit
2,4,6-Tribromophenol		87	41-144
2-Fluorobiphenyl		76	37-129
2-Fluorophenol		51	24-127
Nitrobenzene-d5		74	38-127
Phenol-d5		45	28-128
Terphenyl-d14		83	10-148

PQL = Practical quantitation limit
ND = Not detected at or above the MDL
P = The RPD between two GC columns exceeds 40%
J = Estimated result < PQL and ≥ MDL
N - Recovery is out of criteria
+ - RPD is out of criteria

Where applicable, all soil sample analysis are reported on a dry weight basis unless flagged with a "W"

Note: Calculations are performed before rounding to avoid round-off errors in calculated results

Semivolatile Organic Compounds by GC/MS - LCS

Sample ID: LQ30843-002
Batch: 30843
Analytical Method: 8270D

Matrix: Aqueous
Prep Method: 3520C
Prep Date: 04/02/2010 2357

Parameter	Spike Amount (ug/L)	Result (ug/L)	Q	Dil	% Rec	% Rec Limit	Analysis Date
2,4,5-Trichlorophenol	20	20		1	101	46-125	04/06/2010 1238
2,4,6-Trichlorophenol	20	18		1	90	36-123	04/06/2010 1238
2,4-Dichlorophenol	20	19		1	94	38-127	04/06/2010 1238
2,4-Dimethylphenol	20	19		1	94	36-110	04/06/2010 1238
2,4-Dinitrophenol	100	90		1	90	33-143	04/06/2010 1238
2,4-Dinitrotoluene	40	40		1	99	55-137	04/06/2010 1238
2,6-Dinitrotoluene	40	38		1	94	53-128	04/06/2010 1238
2-Chloronaphthalene	20	19		1	94	42-132	04/06/2010 1238
2-Chlorophenol	20	18		1	90	40-128	04/06/2010 1238
2-Methylnaphthalene	20	18		1	88	49-122	04/06/2010 1238
2-Methylphenol	20	20		1	101	33-122	04/06/2010 1238
2-Nitroaniline	40	38		1	94	48-126	04/06/2010 1238
2-Nitrophenol	40	40		1	99	44-131	04/06/2010 1238
3 & 4-Methylphenol	40	36		1	90	48-112	04/06/2010 1238
3-Nitroaniline	40	31		1	78	29-109	04/06/2010 1238
4,6-Dinitro-2-methylphenol	100	91		1	91	46-151	04/06/2010 1238
4-Bromophenyl phenyl ether	20	21		1	104	49-123	04/06/2010 1238
4-Chloro-3-methyl phenol	20	18		1	92	48-136	04/06/2010 1238
4-Chloroaniline	20	12		1	59	18-73	04/06/2010 1238
4-Chlorophenyl phenyl ether	20	19		1	94	34-124	04/06/2010 1238
4-Nitroaniline	40	38		1	94	42-154	04/06/2010 1238
4-Nitrophenol	100	74		1	74	43-145	04/06/2010 1238
Acenaphthene	20	18		1	90	51-130	04/06/2010 1238
Acenaphthylene	20	23		1	114	46-131	04/06/2010 1238
Anthracene	20	19		1	96	48-122	04/06/2010 1238
Benzo(a)anthracene	20	18		1	90	50-143	04/06/2010 1238
Benzo(a)pyrene	20	19		1	97	55-141	04/06/2010 1238
Benzo(b)fluoranthene	20	18		1	92	48-147	04/06/2010 1238
Benzo(g,h,i)perylene	20	14		1	72	48-139	04/06/2010 1238
Benzo(k)fluoranthene	20	19		1	97	48-148	04/06/2010 1238
bis(2-Chloroethoxy)methane	20	17		1	84	46-130	04/06/2010 1238
bis(2-Chloroethyl)ether	20	15		1	75	42-127	04/06/2010 1238
bis(2-Chloroisopropyl)ether	20	13		1	65	36-133	04/06/2010 1238
bis(2-Ethylhexyl)phthalate	20	17		1	87	40-141	04/06/2010 1238
Butyl benzyl phthalate	20	18		1	91	52-142	04/06/2010 1238
Carbazole	20	22	N	1	112	45-101	04/06/2010 1238
Chrysene	20	20		1	102	51-137	04/06/2010 1238
Di-n-butyl phthalate	20	18		1	89	50-134	04/06/2010 1238
Di-n-octylphthalate	20	17		1	85	50-136	04/06/2010 1238
Dibenzo(a,h)anthracene	20	17		1	83	48-139	04/06/2010 1238
Dibenzofuran	20	18		1	92	45-142	04/06/2010 1238
Diethylphthalate	20	18		1	92	48-124	04/06/2010 1238
Dimethyl phthalate	20	19		1	97	43-122	04/06/2010 1238
Fluoranthene	20	19		1	93	50-124	04/06/2010 1238

PQL = Practical quantitation limit
ND = Not detected at or above the MDL
P = The RPD between two GC columns exceeds 40%
J = Estimated result < PQL and ≥ MDL
N - Recovery is out of criteria
+ - RPD is out of criteria

Where applicable, all soil sample analysis are reported on a dry weight basis unless flagged with a "W"

Note: Calculations are performed before rounding to avoid round-off errors in calculated results

Semivolatile Organic Compounds by GC/MS - LCS

Sample ID: LQ30843-002
Batch: 30843
Analytical Method: 8270D

Matrix: Aqueous
Prep Method: 3520C
Prep Date: 04/02/2010 2357

Parameter	Spike Amount (ug/L)	Result (ug/L)	Q	Dil	% Rec	% Rec Limit	Analysis Date
Fluorene	20	19		1	94	39-122	04/06/2010 1238
Hexachlorobenzene	20	21		1	105	46-125	04/06/2010 1238
Hexachlorobutadiene	20	17		1	87	38-121	04/06/2010 1238
Hexachlorocyclopentadiene	100	66		1	66	24-110	04/06/2010 1238
Hexachloroethane	20	16		1	78	32-109	04/06/2010 1238
Indeno(1,2,3-c,d)pyrene	20	15		1	76	49-146	04/06/2010 1238
Isophorone	20	17		1	86	43-118	04/06/2010 1238
N-Nitrosodi-n-propylamine	20	16		1	81	46-135	04/06/2010 1238
N-Nitrosodiphenylamine (Diphenylamine)	20	21		1	104	44-124	04/06/2010 1238
Naphthalene	20	17		1	87	45-118	04/06/2010 1238
Nitrobenzene	20	17		1	84	46-131	04/06/2010 1238
Pentachlorophenol	100	78		1	78	30-137	04/06/2010 1238
Phenanthrene	20	19		1	95	49-122	04/06/2010 1238
Phenol	20	17		1	83	35-118	04/06/2010 1238
Pyrene	20	20		1	99	50-130	04/06/2010 1238

Surrogate	Q	% Rec	Acceptance Limit
2,4,6-Tribromophenol		114	41-144
2-Fluorobiphenyl		89	37-129
2-Fluorophenol		85	24-127
Nitrobenzene-d5		88	38-127
Phenol-d5		82	28-128
Terphenyl-d14		84	10-148

PQL = Practical quantitation limit
ND = Not detected at or above the MDL
P = The RPD between two GC columns exceeds 40%
J = Estimated result < PQL and ≥ MDL
N - Recovery is out of criteria
+ - RPD is out of criteria

Where applicable, all soil sample analysis are reported on a dry weight basis unless flagged with a "W"

Note: Calculations are performed before rounding to avoid round-off errors in calculated results

Semivolatile Organic Compounds by GC/MS - MS

Sample ID: LD01022-007MS
Batch: 30843
Analytical Method: 8270D

Matrix: Aqueous
Prep Method: 3520C
Prep Date: 04/02/2010 2357

Parameter	Sample Amount (ug/L)	Spike Amount (ug/L)	Result (ug/L)	Q	Dil	% Rec	% Rec Limit	Analysis Date
Acenaphthene	ND	40	33		1	83	10-133	04/06/2010 1622
Acenaphthylene	ND	40	42		1	105	34-128	04/06/2010 1622
Anthracene	ND	40	35		1	88	48-122	04/06/2010 1622
Benzo(a)anthracene	ND	40	17	N	1	43	53-98	04/06/2010 1622
Benzo(a)pyrene	ND	40	9.5		1	24	11-160	04/06/2010 1622
Benzo(b)fluoranthene	ND	40	7.3		1	18	10-165	04/06/2010 1622
Benzo(g,h,i)perylene	ND	40	3.6	N	1	8.9	42-111	04/06/2010 1622
Benzo(k)fluoranthene	ND	40	10		1	25	13-175	04/06/2010 1622
4-Bromophenyl phenyl ether	ND	40	39		1	98	49-123	04/06/2010 1622
Butyl benzyl phthalate	ND	40	31		1	77	52-142	04/06/2010 1622
Carbazole	ND	40	49	N	1	123	45-101	04/06/2010 1622
4-Chloro-3-methyl phenol	ND	40	36		1	91	40-98	04/06/2010 1622
4-Chloroaniline	ND	40	16		1	40	10-98	04/06/2010 1622
bis(2-Chloroethoxy)methane	ND	40	32		1	80	43-93	04/06/2010 1622
bis(2-Chloroethyl)ether	ND	40	27		1	67	41-88	04/06/2010 1622
bis(2-Chloroisopropyl)ether	ND	40	24		1	59	36-99	04/06/2010 1622
2-Chloronaphthalene	ND	40	31		1	77	40-89	04/06/2010 1622
2-Chlorophenol	ND	40	32		1	80	33-92	04/06/2010 1622
4-Chlorophenyl phenyl ether	ND	40	35		1	89	34-124	04/06/2010 1622
Chrysene	ND	40	21		1	53	51-107	04/06/2010 1622
Dibenzo(a,h)anthracene	ND	40	4.5	N	1	11	47-116	04/06/2010 1622
Dibenzofuran	ND	40	35		1	87	45-94	04/06/2010 1622
2,4-Dichlorophenol	ND	40	36		1	89	34-105	04/06/2010 1622
Diethylphthalate	ND	40	37		1	93	48-124	04/06/2010 1622
Dimethyl phthalate	ND	40	38		1	95	43-122	04/06/2010 1622
2,4-Dimethylphenol	ND	40	36	N	1	90	33-77	04/06/2010 1622
Di-n-butyl phthalate	ND	40	33		1	84	50-134	04/06/2010 1622
4,6-Dinitro-2-methylphenol	ND	200	190		1	96	33-118	04/06/2010 1622
2,4-Dinitrophenol	ND	200	180		1	89	19-119	04/06/2010 1622
2,4-Dinitrotoluene	ND	80	82		1	103	50-104	04/06/2010 1622
2,6-Dinitrotoluene	ND	80	71		1	88	53-128	04/06/2010 1622
Di-n-octylphthalate	ND	40	4.6	N	1	12	40-112	04/06/2010 1622
bis(2-Ethylhexyl)phthalate	ND	40	4.4		1	11	10-142	04/06/2010 1622
Fluoranthene	ND	40	31		1	77	50-124	04/06/2010 1622
Fluorene	ND	40	35		1	88	39-122	04/06/2010 1622
Hexachlorobenzene	ND	40	35		1	89	46-125	04/06/2010 1622
Hexachlorobutadiene	ND	40	29		1	73	42-94	04/06/2010 1622
Hexachlorocyclopentadiene	ND	200	130		1	64	14-89	04/06/2010 1622
Hexachloroethane	ND	40	27		1	68	39-86	04/06/2010 1622
Indeno(1,2,3-c,d)pyrene	ND	40	5.7	N	1	14	43-113	04/06/2010 1622
Isophorone	ND	40	33		1	83	42-84	04/06/2010 1622
2-Methylnaphthalene	ND	40	32		1	81	46-90	04/06/2010 1622
2-Methylphenol	ND	40	36		1	90	33-122	04/06/2010 1622
3 & 4-Methylphenol	ND	80	65		1	81	24-97	04/06/2010 1622

PQL = Practical quantitation limit
ND = Not detected at or above the MDL
P = The RPD between two GC columns exceeds 40%
J = Estimated result < PQL and ≥ MDL
N - Recovery is out of criteria
+ - RPD is out of criteria

Where applicable, all soil sample analysis are reported on a dry weight basis unless flagged with a "W"

Note: Calculations are performed before rounding to avoid round-off errors in calculated results

Semivolatile Organic Compounds by GC/MS - MS

Sample ID: LD01022-007MS
Batch: 30843
Analytical Method: 8270D

Matrix: Aqueous
Prep Method: 3520C
Prep Date: 04/02/2010 2357

Parameter	Sample Amount (ug/L)	Spike Amount (ug/L)	Result (ug/L)	Q	Dil	% Rec	% Rec Limit	Analysis Date
Naphthalene	ND	40	30		1	76	46-89	04/06/2010 1622
2-Nitroaniline	ND	80	75		1	94	48-126	04/06/2010 1622
3-Nitroaniline	ND	80	59		1	73	10-110	04/06/2010 1622
4-Nitroaniline	ND	80	75		1	93	41-99	04/06/2010 1622
Nitrobenzene	ND	40	31		1	78	44-91	04/06/2010 1622
2-Nitrophenol	ND	80	73		1	91	34-102	04/06/2010 1622
4-Nitrophenol	ND	200	160		1	78	29-122	04/06/2010 1622
N-Nitrosodi-n-propylamine	ND	40	31		1	77	41-96	04/06/2010 1622
N-Nitrosodiphenylamine (Diphenylamine)	ND	40	38		1	94	10-150	04/06/2010 1622
Pentachlorophenol	ND	200	160		1	80	32-110	04/06/2010 1622
Phenanthrene	ND	40	36		1	89	49-122	04/06/2010 1622
Phenol	ND	40	26		1	65	33-92	04/06/2010 1622
Pyrene	ND	40	31		1	77	50-130	04/06/2010 1622
2,4,5-Trichlorophenol	ND	40	38		1	95	46-125	04/06/2010 1622
2,4,6-Trichlorophenol	ND	40	36		1	90	36-123	04/06/2010 1622

Surrogate	Q	% Rec	Acceptance Limit
2-Fluorobiphenyl		81	37-129
2-Fluorophenol		58	24-127
Nitrobenzene-d5		80	38-127
Phenol-d5		64	28-128
Terphenyl-d14		49	10-148
2,4,6-Tribromophenol		114	41-144

PQL = Practical quantitation limit
ND = Not detected at or above the MDL
P = The RPD between two GC columns exceeds 40%
J = Estimated result < PQL and ≥ MDL
N - Recovery is out of criteria
+ - RPD is out of criteria

Where applicable, all soil sample analysis are reported on a dry weight basis unless flagged with a "W"

Note: Calculations are performed before rounding to avoid round-off errors in calculated results

Semivolatile Organic Compounds by GC/MS - MSD

Sample ID: LD01022-007MD
Batch: 30843
Analytical Method: 8270D

Matrix: Aqueous
Prep Method: 3520C
Prep Date: 04/02/2010 2357

Parameter	Sample Amount (ug/L)	Spike Amount (ug/L)	Result (ug/L)	Q	Dil	% Rec	% RPD	% Rec Limit	% RPD Limit	Analysis Date
Acenaphthene	ND	41	37		1	91	11	10-133	40	04/06/2010 1642
Acenaphthylene	ND	41	46		1	112	8.9	34-128	40	04/06/2010 1642
Anthracene	ND	41	36		1	88	2.2	48-122	40	04/06/2010 1642
Benzo(a)anthracene	ND	41	16	N	1	39	6.3	53-98	40	04/06/2010 1642
Benzo(a)pyrene	ND	41	10		1	25	8.3	11-160	40	04/06/2010 1642
Benzo(b)fluoranthene	ND	41	7.9		1	19	7.6	10-165	40	04/06/2010 1642
Benzo(g,h,i)perylene	ND	41	4.6	N	1	11	25	42-111	40	04/06/2010 1642
Benzo(k)fluoranthene	ND	41	11		1	26	6.3	13-175	40	04/06/2010 1642
4-Bromophenyl phenyl ether	ND	41	42		1	104	8.2	49-123	40	04/06/2010 1642
Butyl benzyl phthalate	ND	41	30		1	74	1.7	52-142	40	04/06/2010 1642
Carbazole	ND	41	54	N	1	132	8.9	45-101	40	04/06/2010 1642
4-Chloro-3-methyl phenol	ND	41	40		1	97	9.1	40-98	40	04/06/2010 1642
4-Chloroaniline	ND	41	20		1	48	21	10-98	40	04/06/2010 1642
bis(2-Chloroethoxy)methane	ND	41	35		1	86	9.5	43-93	40	04/06/2010 1642
bis(2-Chloroethyl)ether	ND	41	30		1	75	13	41-88	40	04/06/2010 1642
bis(2-Chloroisopropyl)ether	ND	41	26		1	65	11	36-99	40	04/06/2010 1642
2-Chloronaphthalene	ND	41	35		1	85	12	40-89	40	04/06/2010 1642
2-Chlorophenol	ND	41	37		1	90	14	33-92	40	04/06/2010 1642
4-Chlorophenyl phenyl ether	ND	41	39		1	96	9.9	34-124	40	04/06/2010 1642
Chrysene	ND	41	20	N	1	48	6.5	51-107	40	04/06/2010 1642
Dibenzo(a,h)anthracene	ND	41	5.5	N	1	14	20	47-116	40	04/06/2010 1642
Dibenzofuran	ND	41	39	N	1	95	11	45-94	40	04/06/2010 1642
2,4-Dichlorophenol	ND	41	40		1	99	12	34-105	40	04/06/2010 1642
Diethylphthalate	ND	41	39		1	97	5.9	48-124	40	04/06/2010 1642
Dimethyl phthalate	ND	41	41		1	101	7.2	43-122	40	04/06/2010 1642
2,4-Dimethylphenol	ND	41	40	N	1	97	9.7	33-77	40	04/06/2010 1642
Di-n-butyl phthalate	ND	41	33		1	82	0.074	50-134	40	04/06/2010 1642
4,6-Dinitro-2-methylphenol	ND	200	200		1	100	6.1	33-118	40	04/06/2010 1642
2,4-Dinitrophenol	ND	200	190		1	95	7.9	19-119	40	04/06/2010 1642
2,4-Dinitrotoluene	ND	82	89	N	1	108	7.3	50-104	40	04/06/2010 1642
2,6-Dinitrotoluene	ND	82	77		1	94	8.1	53-128	40	04/06/2010 1642
Di-n-octylphthalate	ND	41	4.8	N	1	12	3.2	40-112	40	04/06/2010 1642
bis(2-Ethylhexyl)phthalate	ND	41	4.6		1	11	2.5	10-142	40	04/06/2010 1642
Fluoranthene	ND	41	30		1	74	2.7	50-124	40	04/06/2010 1642
Fluorene	ND	41	39		1	96	10	39-122	40	04/06/2010 1642
Hexachlorobenzene	ND	41	37		1	90	4.1	46-125	40	04/06/2010 1642
Hexachlorobutadiene	ND	41	33		1	81	12	42-94	40	04/06/2010 1642
Hexachlorocyclopentadiene	ND	200	150		1	72	13	14-89	40	04/06/2010 1642
Hexachloroethane	ND	41	32		1	78	16	39-86	40	04/06/2010 1642
Indeno(1,2,3-c,d)pyrene	ND	41	6.3	N	1	15	9.8	43-113	40	04/06/2010 1642
Isophorone	ND	41	36	N	1	88	8.0	42-84	40	04/06/2010 1642
2-Methylnaphthalene	ND	41	36		1	89	12	46-90	40	04/06/2010 1642
2-Methylphenol	ND	41	40		1	99	12	33-122	40	04/06/2010 1642
3 & 4-Methylphenol	ND	82	74		1	90	13	24-97	40	04/06/2010 1642

PQL = Practical quantitation limit
ND = Not detected at or above the MDL
P = The RPD between two GC columns exceeds 40%
J = Estimated result < PQL and ≥ MDL
N - Recovery is out of criteria
+ - RPD is out of criteria

Where applicable, all soil sample analysis are reported on a dry weight basis unless flagged with a "W"

Note: Calculations are performed before rounding to avoid round-off errors in calculated results

Semivolatile Organic Compounds by GC/MS - MSD

Sample ID: LD01022-007MD
Batch: 30843
Analytical Method: 8270D

Matrix: Aqueous
Prep Method: 3520C
Prep Date: 04/02/2010 2357

Parameter	Sample Amount (ug/L)	Spike Amount (ug/L)	Result (ug/L)	Q	Dil	% Rec	% RPD	% Rec Limit	% RPD Limit	Analysis Date
Naphthalene	ND	41	34		1	84	13	46-89	40	04/06/2010 1642
2-Nitroaniline	ND	82	80		1	99	7.3	48-126	40	04/06/2010 1642
3-Nitroaniline	ND	82	61		1	74	3.3	10-110	40	04/06/2010 1642
4-Nitroaniline	ND	82	77		1	94	3.1	41-99	40	04/06/2010 1642
Nitrobenzene	ND	41	35		1	86	11	44-91	40	04/06/2010 1642
2-Nitrophenol	ND	82	82		1	101	12	34-102	40	04/06/2010 1642
4-Nitrophenol	ND	200	170		1	81	6.6	29-122	40	04/06/2010 1642
N-Nitrosodi-n-propylamine	ND	41	34		1	83	8.9	41-96	40	04/06/2010 1642
N-Nitrosodiphenylamine (Diphenylamine)	ND	41	39		1	95	2.4	10-150	40	04/06/2010 1642
Pentachlorophenol	ND	200	170		1	83	5.9	32-110	40	04/06/2010 1642
Phenanthrene	ND	41	38		1	92	5.1	49-122	40	04/06/2010 1642
Phenol	ND	41	31		1	75	15	33-92	40	04/06/2010 1642
Pyrene	ND	41	29		1	71	5.3	50-130	40	04/06/2010 1642
2,4,5-Trichlorophenol	ND	41	43		1	106	14	46-125	40	04/06/2010 1642
2,4,6-Trichlorophenol	ND	41	40		1	98	10	36-123	40	04/06/2010 1642

Surrogate	Q	% Rec	Acceptance Limit
2-Fluorobiphenyl		89	37-129
2-Fluorophenol		77	24-127
Nitrobenzene-d5		89	38-127
Phenol-d5		74	28-128
Terphenyl-d14		50	10-148
2,4,6-Tribromophenol		120	41-144

PQL = Practical quantitation limit
ND = Not detected at or above the MDL
P = The RPD between two GC columns exceeds 40%
J = Estimated result < PQL and ≥ MDL
N - Recovery is out of criteria
+ - RPD is out of criteria

Where applicable, all soil sample analysis are reported on a dry weight basis unless flagged with a "W"

Note: Calculations are performed before rounding to avoid round-off errors in calculated results

Semivolatile Organic Compounds by GC/MS - MB

Sample ID: LQ30949-001
Batch: 30949
Analytical Method: 8270D

Matrix: Aqueous
Prep Method: 3520C
Prep Date: 04/06/2010 1730

Parameter	Result	Q	Dil	PQL	MDL	Units	Analysis Date
1,1'-Biphenyl	ND		1	1.0	0.20	ug/L	04/08/2010 1842
2,4,5-Trichlorophenol	ND		1	1.0	0.18	ug/L	04/08/2010 1842
2,4,6-Trichlorophenol	ND		1	1.0	0.22	ug/L	04/08/2010 1842
2,4-Dichlorophenol	ND		1	1.0	0.15	ug/L	04/08/2010 1842
2,4-Dimethylphenol	ND		1	1.0	0.31	ug/L	04/08/2010 1842
2,4-Dinitrophenol	ND		1	5.0	0.25	ug/L	04/08/2010 1842
2,4-Dinitrotoluene	ND		1	2.0	0.45	ug/L	04/08/2010 1842
2,6-Dinitrotoluene	ND		1	2.0	0.40	ug/L	04/08/2010 1842
2-Chloronaphthalene	ND		1	1.0	0.12	ug/L	04/08/2010 1842
2-Chlorophenol	ND		1	1.0	0.13	ug/L	04/08/2010 1842
2-Methylnaphthalene	ND		1	1.0	0.080	ug/L	04/08/2010 1842
2-Methylphenol	ND		1	1.0	0.17	ug/L	04/08/2010 1842
2-Nitroaniline	ND		1	2.0	0.55	ug/L	04/08/2010 1842
2-Nitrophenol	ND		1	2.0	0.27	ug/L	04/08/2010 1842
3 & 4-Methylphenol	ND		1	2.0	0.57	ug/L	04/08/2010 1842
3,3'-Dichlorobenzidine	ND		1	5.0	0.81	ug/L	04/08/2010 1842
3-Nitroaniline	ND		1	2.0	0.77	ug/L	04/08/2010 1842
4,6-Dinitro-2-methylphenol	ND		1	5.0	1.5	ug/L	04/08/2010 1842
4-Bromophenyl phenyl ether	ND		1	1.0	0.12	ug/L	04/08/2010 1842
4-Chloro-3-methyl phenol	ND		1	1.0	0.22	ug/L	04/08/2010 1842
4-Chloroaniline	ND		1	1.0	0.13	ug/L	04/08/2010 1842
4-Chlorophenyl phenyl ether	ND		1	1.0	0.11	ug/L	04/08/2010 1842
4-Nitroaniline	ND		1	2.0	0.39	ug/L	04/08/2010 1842
4-Nitrophenol	ND		1	5.0	0.64	ug/L	04/08/2010 1842
Acenaphthene	ND		1	1.0	0.090	ug/L	04/08/2010 1842
Acenaphthylene	ND		1	1.0	0.16	ug/L	04/08/2010 1842
Acetophenone	ND		1	1.0	0.32	ug/L	04/08/2010 1842
Anthracene	ND		1	1.0	0.13	ug/L	04/08/2010 1842
Atrazine	ND		1	1.0	0.20	ug/L	04/08/2010 1842
Benzaldehyde	ND		1	5.0	1.0	ug/L	04/08/2010 1842
Benzo(a)anthracene	ND		1	1.0	0.15	ug/L	04/08/2010 1842
Benzo(a)pyrene	ND		1	1.0	0.16	ug/L	04/08/2010 1842
Benzo(b)fluoranthene	ND		1	1.0	0.20	ug/L	04/08/2010 1842
Benzo(g,h,i)perylene	ND		1	1.0	0.23	ug/L	04/08/2010 1842
Benzo(k)fluoranthene	ND		1	1.0	0.12	ug/L	04/08/2010 1842
bis(2-Chloroethoxy)methane	ND		1	1.0	0.13	ug/L	04/08/2010 1842
bis(2-Chloroethyl)ether	ND		1	1.0	0.13	ug/L	04/08/2010 1842
bis(2-Chloroisopropyl)ether	ND		1	1.0	0.080	ug/L	04/08/2010 1842
bis(2-Ethylhexyl)phthalate	ND		1	5.0	1.7	ug/L	04/08/2010 1842
Butyl benzyl phthalate	ND		1	5.0	1.7	ug/L	04/08/2010 1842
Caprolactam	ND		1	5.0	1.2	ug/L	04/08/2010 1842
Carbazole	ND		1	1.0	0.25	ug/L	04/08/2010 1842
Chrysene	ND		1	1.0	0.12	ug/L	04/08/2010 1842
Di-n-butyl phthalate	ND		1	5.0	1.7	ug/L	04/08/2010 1842

PQL = Practical quantitation limit
ND = Not detected at or above the MDL
P = The RPD between two GC columns exceeds 40%
J = Estimated result < PQL and ≥ MDL
N - Recovery is out of criteria
+ - RPD is out of criteria

Where applicable, all soil sample analysis are reported on a dry weight basis unless flagged with a "W"

Note: Calculations are performed before rounding to avoid round-off errors in calculated results

Semivolatile Organic Compounds by GC/MS - MB

Sample ID: LQ30949-001
Batch: 30949
Analytical Method: 8270D

Matrix: Aqueous
Prep Method: 3520C
Prep Date: 04/06/2010 1730

Parameter	Result	Q	Dil	PQL	MDL	Units	Analysis Date
Di-n-octylphthalate	ND		1	5.0	1.7	ug/L	04/08/2010 1842
Dibenzo(a,h)anthracene	ND		1	1.0	0.13	ug/L	04/08/2010 1842
Dibenzofuran	ND		1	1.0	0.16	ug/L	04/08/2010 1842
Diethylphthalate	ND		1	5.0	1.7	ug/L	04/08/2010 1842
Dimethyl phthalate	ND		1	5.0	1.7	ug/L	04/08/2010 1842
Fluoranthene	ND		1	1.0	0.21	ug/L	04/08/2010 1842
Fluorene	ND		1	1.0	0.10	ug/L	04/08/2010 1842
Hexachlorobenzene	ND		1	1.0	0.21	ug/L	04/08/2010 1842
Hexachlorobutadiene	ND		1	1.0	0.090	ug/L	04/08/2010 1842
Hexachlorocyclopentadiene	ND		1	5.0	0.23	ug/L	04/08/2010 1842
Hexachloroethane	ND		1	1.0	0.11	ug/L	04/08/2010 1842
Indeno(1,2,3-c,d)pyrene	ND		1	1.0	0.23	ug/L	04/08/2010 1842
Isophorone	ND		1	1.0	0.080	ug/L	04/08/2010 1842
N-Nitrosodi-n-propylamine	ND		1	1.0	0.080	ug/L	04/08/2010 1842
N-Nitrosodiphenylamine (Diphenylamine)	ND		1	1.0	0.38	ug/L	04/08/2010 1842
Naphthalene	ND		1	1.0	0.070	ug/L	04/08/2010 1842
Nitrobenzene	ND		1	1.0	0.10	ug/L	04/08/2010 1842
Pentachlorophenol	ND		1	5.0	0.54	ug/L	04/08/2010 1842
Phenanthrene	ND		1	1.0	0.18	ug/L	04/08/2010 1842
Phenol	ND		1	1.0	0.11	ug/L	04/08/2010 1842
Pyrene	ND		1	1.0	0.16	ug/L	04/08/2010 1842

Surrogate	Q	% Rec	Acceptance Limit
2,4,6-Tribromophenol		72	41-144
2-Fluorobiphenyl		69	37-129
2-Fluorophenol		70	24-127
Nitrobenzene-d5		72	38-127
Phenol-d5		70	28-128
Terphenyl-d14		69	10-148

PQL = Practical quantitation limit
ND = Not detected at or above the MDL
P = The RPD between two GC columns exceeds 40%
J = Estimated result < PQL and ≥ MDL
N - Recovery is out of criteria
+ - RPD is out of criteria

Where applicable, all soil sample analysis are reported on a dry weight basis unless flagged with a "W"

Note: Calculations are performed before rounding to avoid round-off errors in calculated results

Semivolatile Organic Compounds by GC/MS - MB

Sample ID: LQ31216-001
Batch: 31216
Analytical Method: 8270D

Matrix: Aqueous
Prep Method: 3520C
Prep Date: 04/09/2010 1700

Parameter	Result	Q	Dil	PQL	MDL	Units	Analysis Date
1,1'-Biphenyl	ND		1	1.0	0.20	ug/L	04/13/2010 1256
2,4,5-Trichlorophenol	ND		1	1.0	0.18	ug/L	04/13/2010 1256
2,4,6-Trichlorophenol	ND		1	1.0	0.22	ug/L	04/13/2010 1256
2,4-Dichlorophenol	ND		1	1.0	0.15	ug/L	04/13/2010 1256
2,4-Dimethylphenol	ND		1	1.0	0.31	ug/L	04/13/2010 1256
2,4-Dinitrophenol	ND		1	5.0	0.25	ug/L	04/13/2010 1256
2,4-Dinitrotoluene	ND		1	2.0	0.45	ug/L	04/13/2010 1256
2,6-Dinitrotoluene	ND		1	2.0	0.40	ug/L	04/13/2010 1256
2-Chloronaphthalene	ND		1	1.0	0.12	ug/L	04/13/2010 1256
2-Chlorophenol	ND		1	1.0	0.13	ug/L	04/13/2010 1256
2-Methylnaphthalene	ND		1	1.0	0.080	ug/L	04/13/2010 1256
2-Methylphenol	ND		1	1.0	0.17	ug/L	04/13/2010 1256
2-Nitroaniline	ND		1	2.0	0.55	ug/L	04/13/2010 1256
2-Nitrophenol	ND		1	2.0	0.27	ug/L	04/13/2010 1256
3 & 4-Methylphenol	ND		1	2.0	0.57	ug/L	04/13/2010 1256
3,3'-Dichlorobenzidine	ND		1	5.0	0.81	ug/L	04/13/2010 1256
3-Nitroaniline	ND		1	2.0	0.77	ug/L	04/13/2010 1256
4,6-Dinitro-2-methylphenol	ND		1	5.0	1.5	ug/L	04/13/2010 1256
4-Bromophenyl phenyl ether	ND		1	1.0	0.12	ug/L	04/13/2010 1256
4-Chloro-3-methyl phenol	ND		1	1.0	0.22	ug/L	04/13/2010 1256
4-Chloroaniline	ND		1	1.0	0.13	ug/L	04/13/2010 1256
4-Chlorophenyl phenyl ether	ND		1	1.0	0.11	ug/L	04/13/2010 1256
4-Nitroaniline	ND		1	2.0	0.39	ug/L	04/13/2010 1256
4-Nitrophenol	ND		1	5.0	0.64	ug/L	04/13/2010 1256
Acenaphthene	ND		1	1.0	0.090	ug/L	04/13/2010 1256
Acenaphthylene	ND		1	1.0	0.16	ug/L	04/13/2010 1256
Acetophenone	ND		1	1.0	0.32	ug/L	04/13/2010 1256
Anthracene	ND		1	1.0	0.13	ug/L	04/13/2010 1256
Atrazine	ND		1	1.0	0.20	ug/L	04/13/2010 1256
Benzaldehyde	ND		1	5.0	1.0	ug/L	04/13/2010 1256
Benzo(a)anthracene	ND		1	1.0	0.15	ug/L	04/13/2010 1256
Benzo(a)pyrene	ND		1	1.0	0.16	ug/L	04/13/2010 1256
Benzo(b)fluoranthene	ND		1	1.0	0.20	ug/L	04/13/2010 1256
Benzo(g,h,i)perylene	ND		1	1.0	0.23	ug/L	04/13/2010 1256
Benzo(k)fluoranthene	ND		1	1.0	0.12	ug/L	04/13/2010 1256
bis(2-Chloroethoxy)methane	ND		1	1.0	0.13	ug/L	04/13/2010 1256
bis(2-Chloroethyl)ether	ND		1	1.0	0.13	ug/L	04/13/2010 1256
bis(2-Chloroisopropyl)ether	ND		1	1.0	0.080	ug/L	04/13/2010 1256
bis(2-Ethylhexyl)phthalate	ND		1	5.0	1.7	ug/L	04/13/2010 1256
Butyl benzyl phthalate	ND		1	5.0	1.7	ug/L	04/13/2010 1256
Caprolactam	ND		1	5.0	1.2	ug/L	04/13/2010 1256
Carbazole	ND		1	1.0	0.25	ug/L	04/13/2010 1256
Chrysene	ND		1	1.0	0.12	ug/L	04/13/2010 1256
Di-n-butyl phthalate	ND		1	5.0	1.7	ug/L	04/13/2010 1256

PQL = Practical quantitation limit
ND = Not detected at or above the MDL
P = The RPD between two GC columns exceeds 40%
J = Estimated result < PQL and ≥ MDL
N - Recovery is out of criteria
+ - RPD is out of criteria

Where applicable, all soil sample analysis are reported on a dry weight basis unless flagged with a "W"

Note: Calculations are performed before rounding to avoid round-off errors in calculated results

Semivolatile Organic Compounds by GC/MS - MB

Sample ID: LQ31216-001
Batch: 31216
Analytical Method: 8270D

Matrix: Aqueous
Prep Method: 3520C
Prep Date: 04/09/2010 1700

Parameter	Result	Q	Dil	PQL	MDL	Units	Analysis Date
Di-n-octylphthalate	ND		1	5.0	1.7	ug/L	04/13/2010 1256
Dibenzo(a,h)anthracene	ND		1	1.0	0.13	ug/L	04/13/2010 1256
Dibenzofuran	ND		1	1.0	0.16	ug/L	04/13/2010 1256
Diethylphthalate	ND		1	5.0	1.7	ug/L	04/13/2010 1256
Dimethyl phthalate	ND		1	5.0	1.7	ug/L	04/13/2010 1256
Fluoranthene	ND		1	1.0	0.21	ug/L	04/13/2010 1256
Fluorene	ND		1	1.0	0.10	ug/L	04/13/2010 1256
Hexachlorobenzene	ND		1	1.0	0.21	ug/L	04/13/2010 1256
Hexachlorobutadiene	ND		1	1.0	0.090	ug/L	04/13/2010 1256
Hexachlorocyclopentadiene	ND		1	5.0	0.23	ug/L	04/13/2010 1256
Hexachloroethane	ND		1	1.0	0.11	ug/L	04/13/2010 1256
Indeno(1,2,3-c,d)pyrene	ND		1	1.0	0.23	ug/L	04/13/2010 1256
Isophorone	ND		1	1.0	0.080	ug/L	04/13/2010 1256
N-Nitrosodi-n-propylamine	ND		1	1.0	0.080	ug/L	04/13/2010 1256
N-Nitrosodiphenylamine (Diphenylamine)	ND		1	1.0	0.38	ug/L	04/13/2010 1256
Naphthalene	ND		1	1.0	0.070	ug/L	04/13/2010 1256
Nitrobenzene	ND		1	1.0	0.10	ug/L	04/13/2010 1256
Pentachlorophenol	ND		1	5.0	0.54	ug/L	04/13/2010 1256
Phenanthrene	ND		1	1.0	0.18	ug/L	04/13/2010 1256
Phenol	ND		1	1.0	0.11	ug/L	04/13/2010 1256
Pyrene	ND		1	1.0	0.16	ug/L	04/13/2010 1256

Surrogate	Q	% Rec	Acceptance Limit
2,4,6-Tribromophenol		56	41-144
2-Fluorobiphenyl		62	37-129
2-Fluorophenol		62	24-127
Nitrobenzene-d5		75	38-127
Phenol-d5		64	28-128
Terphenyl-d14		55	10-148

PQL = Practical quantitation limit
ND = Not detected at or above the MDL
P = The RPD between two GC columns exceeds 40%
J = Estimated result < PQL and ≥ MDL
N - Recovery is out of criteria
+ - RPD is out of criteria

Where applicable, all soil sample analysis are reported on a dry weight basis unless flagged with a "W"

Note: Calculations are performed before rounding to avoid round-off errors in calculated results

Semivolatile Organic Compounds by GC/MS - LCS

Sample ID: LQ31216-002
Batch: 31216
Analytical Method: 8270D

Matrix: Aqueous
Prep Method: 3520C
Prep Date: 04/09/2010 1700

Parameter	Spike Amount (ug/L)	Result (ug/L)	Q	Dil	% Rec	% Rec Limit	Analysis Date
2,4,5-Trichlorophenol	20	13		1	67	46-125	04/13/2010 1441
2,4,6-Trichlorophenol	20	13		1	67	36-123	04/13/2010 1441
2,4-Dichlorophenol	20	14		1	71	38-127	04/13/2010 1441
2,4-Dimethylphenol	20	13		1	63	36-110	04/13/2010 1441
2,4-Dinitrophenol	100	89		1	89	33-143	04/13/2010 1441
2,4-Dinitrotoluene	40	32		1	79	55-137	04/13/2010 1441
2,6-Dinitrotoluene	40	31		1	79	53-128	04/13/2010 1441
2-Chloronaphthalene	20	12		1	62	42-132	04/13/2010 1441
2-Chlorophenol	20	14		1	70	40-128	04/13/2010 1441
2-Methylnaphthalene	20	14		1	70	49-122	04/13/2010 1441
2-Methylphenol	20	15		1	75	33-122	04/13/2010 1441
2-Nitroaniline	40	30		1	74	48-126	04/13/2010 1441
2-Nitrophenol	40	33		1	83	44-131	04/13/2010 1441
3 & 4-Methylphenol	40	29		1	71	48-112	04/13/2010 1441
3-Nitroaniline	40	25		1	64	29-109	04/13/2010 1441
4,6-Dinitro-2-methylphenol	100	89		1	89	46-151	04/13/2010 1441
4-Bromophenyl phenyl ether	20	13		1	65	49-123	04/13/2010 1441
4-Chloro-3-methyl phenol	20	15		1	73	48-136	04/13/2010 1441
4-Chloroaniline	20	5.0		1	25	18-73	04/13/2010 1441
4-Chlorophenyl phenyl ether	20	14		1	68	34-124	04/13/2010 1441
4-Nitroaniline	40	30		1	75	42-154	04/13/2010 1441
4-Nitrophenol	100	76		1	76	43-145	04/13/2010 1441
Acenaphthene	20	13		1	64	51-130	04/13/2010 1441
Acenaphthylene	20	16		1	81	46-131	04/13/2010 1441
Anthracene	20	13		1	64	48-122	04/13/2010 1441
Benzo(a)anthracene	20	13		1	65	50-143	04/13/2010 1441
Benzo(a)pyrene	20	14		1	72	55-141	04/13/2010 1441
Benzo(b)fluoranthene	20	14		1	69	48-147	04/13/2010 1441
Benzo(g,h,i)perylene	20	12		1	60	48-139	04/13/2010 1441
Benzo(k)fluoranthene	20	13		1	64	48-148	04/13/2010 1441
bis(2-Chloroethoxy)methane	20	13		1	67	46-130	04/13/2010 1441
bis(2-Chloroethyl)ether	20	14		1	69	42-127	04/13/2010 1441
bis(2-Chloroisopropyl)ether	20	13		1	67	36-133	04/13/2010 1441
bis(2-Ethylhexyl)phthalate	20	13		1	65	40-141	04/13/2010 1441
Butyl benzyl phthalate	20	14		1	70	52-142	04/13/2010 1441
Carbazole	20	14		1	72	45-101	04/13/2010 1441
Chrysene	20	13		1	67	51-137	04/13/2010 1441
Di-n-butyl phthalate	20	14		1	71	50-134	04/13/2010 1441
Di-n-octylphthalate	20	14		1	68	50-136	04/13/2010 1441
Dibenzo(a,h)anthracene	20	13		1	66	48-139	04/13/2010 1441
Dibenzofuran	20	13		1	65	45-142	04/13/2010 1441
Diethylphthalate	20	14		1	69	48-124	04/13/2010 1441
Dimethyl phthalate	20	14		1	69	43-122	04/13/2010 1441
Fluoranthene	20	13		1	67	50-124	04/13/2010 1441

PQL = Practical quantitation limit
ND = Not detected at or above the MDL
P = The RPD between two GC columns exceeds 40%
J = Estimated result < PQL and ≥ MDL
N - Recovery is out of criteria
+ - RPD is out of criteria

Where applicable, all soil sample analysis are reported on a dry weight basis unless flagged with a "W"

Note: Calculations are performed before rounding to avoid round-off errors in calculated results

Semivolatile Organic Compounds by GC/MS - LCS

Sample ID: LQ31216-002
Batch: 31216
Analytical Method: 8270D

Matrix: Aqueous
Prep Method: 3520C
Prep Date: 04/09/2010 1700

Parameter	Spike Amount (ug/L)	Result (ug/L)	Q	Dil	% Rec	% Rec Limit	Analysis Date
Fluorene	20	14		1	68	39-122	04/13/2010 1441
Hexachlorobenzene	20	13		1	65	46-125	04/13/2010 1441
Hexachlorobutadiene	20	13		1	66	38-121	04/13/2010 1441
Hexachlorocyclopentadiene	100	49		1	49	24-110	04/13/2010 1441
Hexachloroethane	20	13		1	67	32-109	04/13/2010 1441
Indeno(1,2,3-c,d)pyrene	20	13		1	64	49-146	04/13/2010 1441
Isophorone	20	14		1	71	43-118	04/13/2010 1441
N-Nitrosodi-n-propylamine	20	15		1	73	46-135	04/13/2010 1441
N-Nitrosodiphenylamine (Diphenylamine)	20	13		1	67	44-124	04/13/2010 1441
Naphthalene	20	13		1	65	45-118	04/13/2010 1441
Nitrobenzene	20	17		1	86	46-131	04/13/2010 1441
Pentachlorophenol	100	67		1	67	30-137	04/13/2010 1441
Phenanthrene	20	13		1	66	49-122	04/13/2010 1441
Phenol	20	14		1	71	35-118	04/13/2010 1441
Pyrene	20	13		1	67	50-130	04/13/2010 1441

Surrogate	Q	% Rec	Acceptance Limit
2,4,6-Tribromophenol		69	41-144
2-Fluorobiphenyl		63	37-129
2-Fluorophenol		66	24-127
Nitrobenzene-d5		82	38-127
Phenol-d5		68	28-128
Terphenyl-d14		55	10-148

PQL = Practical quantitation limit
ND = Not detected at or above the MDL
P = The RPD between two GC columns exceeds 40%
J = Estimated result < PQL and ≥ MDL
N - Recovery is out of criteria
+ - RPD is out of criteria

Where applicable, all soil sample analysis are reported on a dry weight basis unless flagged with a "W"

Note: Calculations are performed before rounding to avoid round-off errors in calculated results

Semivolatile Organic Compounds by GC/MS - LCSD

Sample ID: LQ31216-003
Batch: 31216
Analytical Method: 8270D

Matrix: Aqueous
Prep Method: 3520C
Prep Date: 04/09/2010 1700

Parameter	Spike Amount (ug/L)	Result (ug/L)	Q	Dil	% Rec	% RPD	% Rec Limit	% RPD Limit	Analysis Date
2,4,5-Trichlorophenol	20	13		1	67	0.49	46-125	40	04/13/2010 1500
2,4,6-Trichlorophenol	20	13		1	65	3.0	36-123	40	04/13/2010 1500
2,4-Dichlorophenol	20	13		1	64	9.7	38-127	40	04/13/2010 1500
2,4-Dimethylphenol	20	12		1	58	8.5	36-110	40	04/13/2010 1500
2,4-Dinitrophenol	100	94		1	94	4.7	33-143	40	04/13/2010 1500
2,4-Dinitrotoluene	40	32		1	79	0.55	55-137	40	04/13/2010 1500
2,6-Dinitrotoluene	40	32		1	79	0.63	53-128	40	04/13/2010 1500
2-Chloronaphthalene	20	12		1	58	8.1	42-132	40	04/13/2010 1500
2-Chlorophenol	20	12		1	62	12	40-128	40	04/13/2010 1500
2-Methylnaphthalene	20	13		1	63	10	49-122	40	04/13/2010 1500
2-Methylphenol	20	14		1	69	8.9	33-122	40	04/13/2010 1500
2-Nitroaniline	40	30		1	75	1.8	48-126	40	04/13/2010 1500
2-Nitrophenol	40	29		1	73	12	44-131	40	04/13/2010 1500
3 & 4-Methylphenol	40	26		1	65	9.2	48-112	40	04/13/2010 1500
3-Nitroaniline	40	29		1	73	14	29-109	40	04/13/2010 1500
4,6-Dinitro-2-methylphenol	100	92		1	92	3.5	46-151	40	04/13/2010 1500
4-Bromophenyl phenyl ether	20	13		1	66	1.9	49-123	40	04/13/2010 1500
4-Chloro-3-methyl phenol	20	14		1	71	2.4	48-136	40	04/13/2010 1500
4-Chloroaniline	20	6.1		1	31	19	18-73	40	04/13/2010 1500
4-Chlorophenyl phenyl ether	20	13		1	66	2.2	34-124	40	04/13/2010 1500
4-Nitroaniline	40	32		1	80	6.5	42-154	40	04/13/2010 1500
4-Nitrophenol	100	79		1	79	3.3	43-145	40	04/13/2010 1500
Acenaphthene	20	12		1	62	3.6	51-130	40	04/13/2010 1500
Acenaphthylene	20	15		1	77	4.5	46-131	40	04/13/2010 1500
Anthracene	20	13		1	66	2.2	48-122	40	04/13/2010 1500
Benzo(a)anthracene	20	13		1	66	1.6	50-143	40	04/13/2010 1500
Benzo(a)pyrene	20	15		1	73	1.2	55-141	40	04/13/2010 1500
Benzo(b)fluoranthene	20	13		1	66	4.0	48-147	40	04/13/2010 1500
Benzo(g,h,i)perylene	20	12		1	58	3.6	48-139	40	04/13/2010 1500
Benzo(k)fluoranthene	20	14		1	70	9.0	48-148	40	04/13/2010 1500
bis(2-Chloroethoxy)methane	20	12		1	59	13	46-130	40	04/13/2010 1500
bis(2-Chloroethyl)ether	20	12		1	61	12	42-127	40	04/13/2010 1500
bis(2-Chloroisopropyl)ether	20	12		1	58	13	36-133	40	04/13/2010 1500
bis(2-Ethylhexyl)phthalate	20	12		1	62	4.5	40-141	40	04/13/2010 1500
Butyl benzyl phthalate	20	14		1	71	1.6	52-142	40	04/13/2010 1500
Carbazole	20	15		1	73	2.1	45-101	40	04/13/2010 1500
Chrysene	20	14		1	69	2.3	51-137	40	04/13/2010 1500
Di-n-butyl phthalate	20	14		1	72	2.4	50-134	40	04/13/2010 1500
Di-n-octylphthalate	20	13		1	65	4.3	50-136	40	04/13/2010 1500
Dibenzo(a,h)anthracene	20	13		1	65	1.7	48-139	40	04/13/2010 1500
Dibenzofuran	20	13		1	63	2.6	45-142	40	04/13/2010 1500
Diethylphthalate	20	14		1	70	1.6	48-124	40	04/13/2010 1500
Dimethyl phthalate	20	14		1	69	0.11	43-122	40	04/13/2010 1500
Fluoranthene	20	14		1	70	3.7	50-124	40	04/13/2010 1500

PQL = Practical quantitation limit
ND = Not detected at or above the MDL
P = The RPD between two GC columns exceeds 40%
J = Estimated result < PQL and ≥ MDL
N - Recovery is out of criteria
+ - RPD is out of criteria

Where applicable, all soil sample analysis are reported on a dry weight basis unless flagged with a "W"

Note: Calculations are performed before rounding to avoid round-off errors in calculated results

Semivolatile Organic Compounds by GC/MS - LCSD

Sample ID: LQ31216-003
Batch: 31216
Analytical Method: 8270D

Matrix: Aqueous
Prep Method: 3520C
Prep Date: 04/09/2010 1700

Parameter	Spike Amount (ug/L)	Result (ug/L)	Q	Dil	% Rec	% RPD	% Rec Limit	% RPD Limit	Analysis Date
Fluorene	20	13		1	67	1.2	39-122	40	04/13/2010 1500
Hexachlorobenzene	20	13		1	66	0.57	46-125	40	04/13/2010 1500
Hexachlorobutadiene	20	11		1	57	15	38-121	40	04/13/2010 1500
Hexachlorocyclopentadiene	100	42		1	42	15	24-110	40	04/13/2010 1500
Hexachloroethane	20	12		1	59	12	32-109	40	04/13/2010 1500
Indeno(1,2,3-c,d)pyrene	20	13		1	64	0.21	49-146	40	04/13/2010 1500
Isophorone	20	13		1	66	6.9	43-118	40	04/13/2010 1500
N-Nitrosodi-n-propylamine	20	14		1	68	7.1	46-135	40	04/13/2010 1500
N-Nitrosodiphenylamine (Diphenylamine)	20	13		1	67	0.58	44-124	40	04/13/2010 1500
Naphthalene	20	11		1	56	14	45-118	40	04/13/2010 1500
Nitrobenzene	20	16		1	79	8.6	46-131	40	04/13/2010 1500
Pentachlorophenol	100	69		1	69	3.5	30-137	40	04/13/2010 1500
Phenanthrene	20	13		1	67	2.7	49-122	40	04/13/2010 1500
Phenol	20	13		1	63	12	35-118	40	04/13/2010 1500
Pyrene	20	13		1	67	0.024	50-130	40	04/13/2010 1500

Surrogate	Q	% Rec	Acceptance Limit
2,4,6-Tribromophenol		68	41-144
2-Fluorobiphenyl		56	37-129
2-Fluorophenol		57	24-127
Nitrobenzene-d5		74	38-127
Phenol-d5		61	28-128
Terphenyl-d14		54	10-148

PQL = Practical quantitation limit
ND = Not detected at or above the MDL
P = The RPD between two GC columns exceeds 40%
J = Estimated result < PQL and ≥ MDL
N - Recovery is out of criteria
+ - RPD is out of criteria

Where applicable, all soil sample analysis are reported on a dry weight basis unless flagged with a "W"

Note: Calculations are performed before rounding to avoid round-off errors in calculated results

Number 104875

E-mail
2 (919) 854-5448

Quote No. 11954

Page 1 of 2

elysis (Attach list if more space is needed)

Lot No. LD01022

Remarks / Cooler I.D.

are retained for six weeks from receipt
ther arrangements are made.

Date	Time
Date	Time
Date 9/1/16	Time 0845
Receipt Temp. 3.0, 1.4, 1.4	

Document Number: F-AD-012 Effective Date: 08-04-02

[redacted]

SHEALY **Chain of Custody Record**

SHEALY ENVIRONMENTAL SERVICES, INC.
106 Vantage Point Drive
West Columbia, South Carolina 29172
Telephone No. (803) 791-9700 Fax No. (803) 791-9111

Number 104850

Client: ARCADIS	Report to Contact: Shelley Gibbons	Telephone No. / Fax No. / E-mail: (919) 854-1282 / (919) 854-5448	Quote No.: ~~11945~~ 11954
Address: 801 Corporate Center Dr. Suite 300	Sampler's Signature: X [signature]	Waybill No.	Page 2 of 2
City: Raleigh; State: NC; Zip Code: 27607	Printed Name: Robert B. Shealy	Analysis (Attach list if more space is needed.)	
Project Name: SWMU-39 Hunter Stewart			
Project No.: GP09HAFS.F39A.DG0FI	P.O. No.		Lot No.: LD01022

Sample ID / Description (Containers for each sample may be combined on one line.)	Date	Time	G=Grab C=Composite	Matrix: Aqueous	Matrix: Solid	Matrix: Non-Aqueous	No. of Containers by Preservative Type: Liquids	H2SO4	HNO3	HCl	NaOH	5035 Kit	VOC 8260	SVOC 8270	Remarks / Cooler I.D.
F39TW03 (10-15)	3/31/10	1129	G	X			2			3			X	X	
F39TW03 (30-35)	3/31/10	1446	G	X			2			3			X	X	
F39TW03 (20-25)	3/31/10	1500	G	X			2			3			X	X	
Trip Blank (033110)	lab	lab		X						2			X		

Possible Hazard Identification: ☐ Non-Hazard ☐ Flammable ☐ Skin Irritant ☐ Poison ☒ Unknown

Sample Disposal: ☐ Return to Client ☒ Disposal by Lab

Note: All samples are retained for six weeks from receipt unless other arrangements are made.

Turn Around Time Required (Prior lab approval required for expedited TAT.): ☒ Standard ☐ Rush (Specify)

QC Requirements (Specify)

	Date	Time		Date	Time
1. Relinquished by: [signature] Robert B. Shealy	3/31/10	1530	1. Received by: FedEx		
2. Relinquished by:			2. Received by:		
3. Relinquished by: FedEx	4/1/10	0845	3. Laboratory received by: [signature]	4/1/10	0845

Comments:

LAB USE ONLY
Received on ice (Circle) Yes No Ice Pack
Receipt Temp. 3.0, 1.4, 1.4

DISTRIBUTION: WHITE & YELLOW-Return to laboratory with Sample(s); PINK-Field/Client Copy

Document Number: F-AD-012 Effective Date: 06-04-02

SHEALY ENVIRONMENTAL SERVICES, INC.

SHEALY **Chain of Custody Record**

SHEALY ENVIRONMENTAL SERVICES, INC.
106 Vantage Point Drive
West Columbia, South Carolina 29172
Telephone No. (803) 791-9700 Fax No. (803) 791-9111

Number 104874

Client: ARCADIS	Report to Contact: Shelley Gibbons	Telephone No. / Fax No. / E-mail: (919) 854-1282 / (919) 854-5448	Quote No.
Address: 801 Corporate Center Dr Suite 300	Sampler's Signature: X	Waybill No.	Page 1 of 1
City: Raleigh State: NC Zip Code: 27607	Printed Name: Robert B. Sheely	Analysis (Attach list if more space is needed.)	
Project Name: SWMU 39 Hunter Stewart			
Project No.: GP09HAFS.F39A.DG0FI	P.O. No.		Lot No.: LD01022

Sample ID / Description (Containers for each sample may be combined on one line.)	Date	Time	C=Grab C=Composite	Matrix: Aqueous	Solid	Non-Aqueous	No. of Containers by Preservative Type: Unpres.	H2SO4	HNO3	HCl	NaOH	5035 Kit	8260 VOC	8260 SVOC	Remarks / Cooler I.D.
F39TW04 (10-15)	4/1/10	0854	G	X			2			3			X	X	
F39TW04 (40-45)	4/1/10	0925	G	X			2			3			X	X	
F39TW04 (30-35)	4/1/10	1517	G	X			2			3			X	X	
F39TW04 (20-25)	4/1/10	1533	G	X			2			3			X	X	
Trip Blank (040110)	1/6	1/6		X						2			X		

Possible Hazard Identification: ☐ Non-Hazard ☐ Flammable ☐ Skin Irritant ☐ Poison ☒ Unknown

Sample Disposal: ☐ Return to Client ☒ Disposal by Lab

Note: All samples are retained for six weeks from receipt unless other arrangements are made.

Turn Around Time Required (Prior lab approval required for expedited TAT.): ☒ Standard ☐ Rush (Specify)

QC Requirements (Specify):

1. Relinquished by: Robert B. Sheely	Date: 4/5/10	Time: 1730	1. Received by: Fed Ex	Date	Time
2. Relinquished by	Date	Time	2. Received by	Date	Time
3. Relinquished by: FEDEX 4/6/10	Date	Time: 0830	3. Laboratory received by:	Date: 4-6-10	Time: 0830

Comments:

LAB USE ONLY: Received on ice (Circle) (Yes) No Ice Pack — Receipt Temp. 3.4 °C

DISTRIBUTION: WHITE & YELLOW-Return to laboratory with Sample(s), PINK-Field/Client Copy

Document Number: F-AD-012 Effective Date: 08-04-02

SHEALY ENVIRONMENTAL SERVICES, INC.

Shealy Environmental Services, Inc.
Document Number: F-AD-016
Revision Number: 6

Page 1 of 1
Replaces Date: 09/22/06
Effective Date: 05/29/07

Sample Receipt Checklist (SRC)

Client: Arcadis Cooler Inspected by/date: ECL 4/6/10 Lot #: LD01022

Means of receipt: ☐ SESI ☐ Client ☐ UPS ☑ FedEx ☐ Airborne Exp ☐ Other

Yes ☑	No ☐	NA ☐	1. Were custody seals present on the cooler?
Yes ☑	No ☐	NA ☐	2. If custody seals were present, were they intact and unbroken?

Cooler ID/temperature upon receipt 3.4 °C ___/___ °C ___/___ °C ___/___ °C ___/___ °C ___/___ °C ___/___ °C ___/___ °C

Method: ☐ Temperature Blank ☑ Against Bottles
Method of coolant: ☑ Wet Ice ☐ Blue Ice ☐ Dry Ice ☐ None

If response is No (or Yes for 14, 15, 16), an explanation/resolution must be provided.

Yes ☐	No ☐	NA ☑	3. If temperature of any cooler exceeded 6.0°C, was Project Manager notified? PM notified by SRC, phone, note (circle one), other:_____. (For coolers received via commercial courier, PMs are to be notified immediately.
Yes ☑	No ☐	NA ☐	4. Is the commercial courier's packing slip attached to this form?
Yes ☑	No ☐	NA ☐	5. Were proper custody procedures (relinquished/received) followed?
Yes ☑	No ☐	NA ☐	6. Were sample IDs listed?
Yes ☑	No ☐	NA ☐	7. Was collection date & time listed?
Yes ☑	No ☐	NA ☐	8. Were tests to be performed listed on the COC or was quote # provided?
Yes ☑	No ☐	NA ☐	9. Did all samples arrive in the proper containers for each test?
Yes ☑	No ☐	NA ☐	10. Did all container label information (ID, date, time) agree with COC?
Yes ☑	No ☐	NA ☐	11. Did all containers arrive in good condition (unbroken, lids on, etc.)?
Yes ☑	No ☐	NA ☐	12. Was adequate sample volume available?
Yes ☐	No ☑	NA ☐	13. Were all samples received within ½ the holding time or 48 hours, whichever comes first?
Yes ☐	No ☑	NA ☐	14. Were any samples containers missing?
Yes ☐	No ☑	NA ☐	15. Were there any excess samples not listed on COC?
Yes ☐	No ☑	NA ☐	16. Were bubbles present >"pea-size" (¼" or 6mm in diameter) in any VOA vials?
Yes ☐	No ☐	NA ☑	17. Were all metals/O&G/HEM/nutrient samples received at a pH of <2?
Yes ☐	No ☐	NA ☑	18. Were all cyanide and/or sulfide samples received at a pH >12?
Yes ☐	No ☐	NA ☑	19. Were all applicable NH3/TKN/cyanide/phenol/BNA/pest/PCB/herb (<0.2mg/L) and toxicity (<0.1mg/L) samples free of residual chlorine?
Yes ☐	No ☐	NA ☑	20. Were collection temperatures documented on the COC for NC samples?

Sample Preservation (Must be completed for any sample(s) incorrectly preserved or with headspace.)

Sample(s)_____ were received incorrectly preserved and were adjusted accordingly in sample receiving with _____ (H_2SO_4, HNO_3, HCl, NaOH) with the SR # (number)

Sample(s)_____ were received with bubbles >6 mm in diameter.

Sample(s)_____ were received with TRC >0.2 mg/L for NH3/TKN/cyanide/BNA/pest/PCB/herb.

Toxicity sample(s)_____ analyzed by method 330.5.

Corrective Action taken, if necessary:
Was client notified: Yes ☐ No ☐
SESI employee:_____
Comments:_____

...ne 4/5/10 FedEx Tracking Number 871525021949
...nder's ...me ROBBY SHEALY Phone 864 216-5450
Company ARCADIS
Address 30 PATEWOOD DR STE 155
Dept./Floor/Suite/Room
...y GREENVILLE State SC ZIP 29615-6809
...ur Internal Billing Reference CP09UAFS F29A DG4FT

HUNTER STEWART
ELECTRONIC VALIDATION REVIEW REPORT
SDG: MA26019
FST-39

Analytical data were evaluated in accordance with applicable USEPA SW-846 method requirements, "USEPA Contract Laboratory Program National Functional Guidelines for Organic Data Review" (October 1999), "USEPA Contract Laboratory Program National Functional Guidelines for Inorganic Data Review" (July 2002), analytical method control criteria, the analytical laboratory Quality Assurance Control Limits, the Fort Stewart Military Reservation and Hunter Army Airfield Quality Assurance Project Plan (ARCADIS-2008), and professional judgment.

The data review summarized in this report includes a review of all sample collection documentation and the electronic data validation of the analytical data housed in the project database. Sample collection documentation included sample collection logs and chains of custody. The electronic data validation was performed utilizing the EQuIS Data Qualification Module (DQM). DQM checks for the following parameters:

- Holding times and preservation;
- Blank contamination;
    1. Method blanks,
    2. Trip blanks,
    3. Equipment blanks;
- Matrix spike and Duplicate sample recovery;
- Matrix Spike and Matrix Spike Duplicate relative percent differences;
- Laboratory Control Sample and Duplicate recovery;
- Laboratory Control Sample and Duplicate relative percent differences;
- Surrogate recovery (organic analyses only); and
- Field duplicate relative percent difference.

Manual review was performed for the following items:

- Sample dilutions and reporting limits;
- Case Narratives; and
- Laboratory Duplicates

Data was generated by Shealy Environmental Services, Inc. – West Columbia, South Carolina. Data qualifiers were applied electronically to the database with any additional qualifiers added manually. A summary of the data as amended by data qualifiers is included with the original hard copy reports.

The attached table summarizes the data that were qualified due to QC deficiencies. The table indicates compounds/analytes qualified based on electronic and manual validation. Refer to the associated method section of the validation checklist for a detailed explanation of qualification. All other data in these SDGs are considered usable as reported.

HUNTER STEWART
ELECTRONIC VALIDATION REVIEW REPORT
SDG: MA26019
FST-39

The following list of data qualifiers and definitions were applied in accordance with qualification criteria defined in the greater than guidance documents:

UB Compound/analyte detected in blank or associated blank, qualified as a non-detect at listed value.

J The analyte was positively identified, but the associated numerical value is the approximate concentration of the analyte in the sample.

UJ The analyte was not detected greater than the reporting limit; however, the reported quantitation limit is approximate and may, or may not represent the actual limit of quantitation necessary to accurately and precisely measure analyte in the sample.

R The sample result is rejected due to serious deficiencies in the ability to analyze the sample and meet quality control criteria; and the presence or absence of the analyte cannot be verified.

U Not detected at the quantitative reporting limit

DQM RUN BY:	Rachelle Borne	03/12/11
REVIEW PERFORMED BY:	Rachelle Borne	03/12/11
SIGNATURE:	Rachelle Borne	03/21/11
PEER REVIEW:	Dennis Capria	03/23/11

HUNTER STEWART
ELECTRONIC VALIDATION REVIEW REPORT
SDG: MA26019
FST-39

The following samples were included in this validation:

SDG	Sample ID	Sample Date	Parent Sample
MA26019	G4MW10 (012711)	1/27/2011	
MA26019	G4MW11 (012711)	1/27/2011	
MA26019	G4MW13 (012711)	1/27/2011	
MA26019	G4MW14 (012511)	1/25/2011	
MA26019	G4MW18 (012611)	1/26/2011	
MA26019	G4MW19 (012711)	1/27/2011	
MA26019	G4MW20 (012711)	1/27/2011	
MA26019	G4MW24 (012711)	1/27/2011	
MA26019	G4MW25 (012711)	1/27/2011	
MA26019	G4MW29 (012711)	1/27/2011	
MA26019	G4MW30 (012611)	1/26/2011	
MA26019	G4MW31 (012511)	1/25/2011	
MA26019	G4MW32 (012511)	1/25/2011	
MA26019	G4MW33 (012711)	1/27/2011	
MA26019	G4MW36 (012711)	1/27/2011	
MA26019	G4MW39 (012611)	1/26/2011	
MA26019	G4MW41 (012711)	1/27/2011	
MA26019	G4MW016_20110126	1/26/2011	
MA26019	G4MW017_20110126	1/26/2011	
MA26019	G4MW022_20110125	1/25/2011	
MA26019	G4MW023_20110127	1/27/2011	
MA26019	G4MW026_20110125	1/25/2011	
MA26019	G4MW027_20110127	1/27/2011	
MA26019	G4MW028_20110125	1/25/2011	
MA26019	G4MW034_20110126	1/26/2011	
MA26019	G4MW035_20110126	1/26/2011	
MA26019	G4MW037_20110127	1/27/2011	
MA26019	G4MW038_20110126	1/26/2011	
MA26019	G4MW040_20110128	1/28/2011	
MA26019	G4MW042_20110126	1/26/2011	
MA26019	G4MW043_20110127	1/27/2011	
MA26019	G4MW044_20110126	1/26/2011	
MA26019	G4MW045_20110126	1/26/2011	
MA26019	G4MW046_20110127	1/27/2011	
MA26019	G4MW047_20110126	1/26/2011	
MA26019	TRIP BLANK (012511)	1/25/2011	
MA26019	Trip Blank (012611)	1/27/2011	
MA26019	TRIP BLANK (012711)	1/27/2011	
MA26019	TRIP BLANK (2) (012711)	1/27/2011	
MA26019	DUP02 (012511)	1/25/2011	G4MW32 (012511)
MA26019	G4DUP-01_20110126	1/26/2011	G4MW016_20110126

HUNTER STEWART
ELECTRONIC VALIDATION REVIEW REPORT
SDG: MA26019
FST-39

ANALYTICAL DATA PACKAGE DOCUMENTATION

GENERAL INFORMATION

Items Reviewed	Reported		Performance Acceptable		Not Required
	No	Yes	No	Yes	
1. Sample results		X		X	
2. Parameters analyzed		X		X	
3. Methods of analysis		X		X	
4. Reporting limits of analysis		X		X	
5. Master tracking list		X		X	
6. Sample collection date		X		X	
7. Laboratory sample received date		X		X	
8. Sample preparation/extraction date		X		X	
9. Sample analysis date		X		X	
10. Copy of chain-of-custody form signed by lab sample custodian		X		X	
11. Narrative summary of QA or sample problems provided		X		X	
12. Laboratory Signature		X		X	
13. South Carolina Certification Number		X		X	

QA - quality assurance

The analytical report was complete with the following exceptions or notations.

Note: The laboratory reported values between the quantitative reporting limit and the method detection limit as estimated concentrations. The "J" qualifier was retained in this validation. Non-detect values are reported at the quantitative reporting limit.

HUNTER STEWART
ELECTRONIC VALIDATION REVIEW REPORT
SDG: MA26019
FST-39

VOLATILE ORGANIC COMPOUNDS

Items Reviewed	DQM Deficiency		Qualification Applied	
	No	Yes	No	Yes
1. Holding times/Preservation	DQM		DQM	
2. Reporting limits	M		M	
3. Blanks				
A. Method blanks	DQM		DQM	
B. Equipment blanks	NA		NA	
C. Trip blanks		DQM	DQM	
4. Surrogate spike recoveries	DQM		DQM	
5. Laboratory control sample (LCS) A. LCS %R		DQM		DQM
B. LCS duplicate (LCSD) %R	DQM		DQM	
C. LCS/LCSD RPD		DQM		DQM
6. Matrix spike (MS)				
A. MS %R	NA		NA	
B. MS duplicate (MSD) %R	NA		NA	
C. MS/MSD precision (RPD)	NA		NA	
7. Field Duplicate precision (RPD)	DQM		DQM	

M – Manual Review %R - percent recovery RPD - relative percent difference
DQM – Data Qualification Module

Comments:
This section presents a discussion of any additions or changes to the electronic data validation for compounds analyzed by Method 8260B.

2. Sample G4MW41(012711) was analyzed at a 10x dilution due to elevated concentrations of target analytes. There were elevated concentrations for non-detect results.

3C. The compound methylene chloride was detected in three of the four trip blanks. The associated field samples were non-detect for this compound; therefore, qualification of the data was not warranted.

5A. The recovery of the compound dibromochloromethane was below the control limit in the LCS for batch 51631. The associated field samples were qualified as estimated for this compound. See the attached qualification summary for details of the qualifications.

5C. The RPDs between the LCS/LSCD pair were above the control limit for several compounds in batch 51631. The associated field samples were qualified as estimated for these compounds. See the attached qualification summary for details of the qualifications.

7. Sample location DUP-02(012511) was collected as a field duplicate for G4MW32(012511). The RPDs were acceptable at less than 40%.

Sample location G4DUP-01_20110126 was collected as a field duplicate of G4MW016_20110126. The RPDs were acceptable at less than 40%.

HUNTER STEWART
ELECTRONIC VALIDATION REVIEW REPORT
SDG: MA26019
FST-39

SEMIVOLATILE ORGANIC COMPOUNDS

Items Reviewed	DQM Deficiency		Qualification Applied	
	No	Yes	No	Yes
1. Holding times/Preservation	DQM		DQM	
2. Reporting limits	M		M	
3. Blanks				
A. Method blanks		DQM	DQM	
B. Equipment blanks	NA		NA	
4. Surrogate spike recoveries	DQM		DQM	
5. Laboratory control sample (LCS) A. LCS %R		DQM		DQM
B. LCS duplicate (LCSD) %R	NA		NA	
C. LCS/LCSD RPD	NA		NA	
6. Matrix spike (MS)				
A. MS %R		DQM		DQM
B. MS duplicate (MSD) %R		DQM		DQM
C. MS/MSD precision (RPD)		DQM		DQM
7. Field Duplicate precision (RPD)	DQM		DQM	

M – Manual Review %R - percent recovery RPD - relative percent difference
DQM – Data Qualification Module

Comments:
This section presents a discussion of any additions or changes to the electronic data validation for compounds analyzed by Method 8270D.

3A. The compound naphthalene was detected in the method blank for batch 51711. The associated field samples were non-detect for this compound; therefore, qualification of the data was not warranted.

5A. The recovery of the compound benzo(a)pyrene was below the control limit in the LCS for batch 51711. The associated field samples were qualified as estimated for this compound. See the attached qualification summary for details of the qualifications.

6. Sample location G4MW32(012511) was used as the MS/MSD. The recoveries of di-n-octylphthalate and bis(2-ethylhexyl)phthalate were less than ten percent in the MSD. Both of these compounds were qualified as rejected in this sample. Several recoveries were outside the control limits in the MS and/or the MSD. Several RPDs between the MS/MSD pair were outside the control limits. The parent sample was qualified as estimated for these compounds when applicable. See the attached qualification summary for details of the qualifications.

Sample location G4MW023 was used as the MS/MSD. The recoveries of benzo(g,h,i)perylene, dibenzo(a,h)anthracene, di-n-octyl phthalate, bis(2-ehtylhexyl)phthalate, indeno(1,2,3-cd)pyrene and 4-chloroaniline were less than ten percent in the MS and/or the MSD. Benzo(g,h,i)perylene, dibenzo(a,h)anthracene, di-n-octyl phthalate, bis(2-ehtylhexyl)phthalate, indeno(1,2,3-cd)pyrene and 4-chloroaniline were qualified as rejected in the parent sample. Several recoveries were outside the control limits in the MS and/or the MSD. Several RPDs between the MS/MSD pair were outside the control limits. The parent sample was qualified as estimated for these compounds when applicable. See the attached qualification summary for details of the qualifications.

Sample location G4MW043 was used as the MS/MSD. The recovery of 4-chloroaniline was less than ten percent in the MS and the MSD. The parent sample was qualified as rejected for this compound. The recoveries of several compounds were below the control limit in the MS and/or the MSD. The parent sample was qualified as estimated for these compounds when applicable. See the attached qualification summary for details of the qualifications.

Sample location G4MW13(012711) was used as the MS/MSD. The recoveries of 4-chloroaniline, 3-nitroaniline and 4-nitroaniline were less than ten percent in the MS and/or the MSD. The parent sample was qualified as rejected for these compounds. The recoveries of several compounds were below the control limit in the MS and/or the MSD. The RPD between the MS/MSD pair was above the control limit for diphenylamine. The parent sample was qualified as estimated for these compounds when applicable. See the attached qualification summary for details of the qualifications.

7. Sample location DUP-02(012511) was collected as a field duplicate for G4MW32(012511). The RPDs were acceptable at non-detect.

   Sample location G4DUP-01_20110126 was collected as a field duplicate of G4MW016_20110126. The RPDs were acceptable at non-detect.

METALS

Items Reviewed	DQM Deficiency		Qualification Applied	
	No	Yes	No	Yes
1. Holding times/Preservation	DQM		DQM	
2. Reporting limits	M		M	
3. Blanks				
A. Method blanks		DQM	DQM	
B. Equipment blanks	NA		NA	
4. Total vs. Dissolved	M		M	
5. Laboratory control sample (LCS) A. LCS %R		DQM		DQM
B. LCS duplicate (LCSD) %R	NA		NA	
C. LCS/LCSD RPD	NA		NA	
6. Matrix spike (MS)				
A. MS %R		DQM		DQM
B. MS duplicate (MSD) %R		DQM		DQM
C. MS/MSD precision (RPD)		DQM		DQM
7. Field Duplicate precision (RPD)	DQM		DQM	

M – Manual Review %R - percent recovery RPD - relative percent difference
DQM – Data Qualification Module

Comments:
This section presents a discussion of any additions or changes to the electronic data validation for compounds analyzed by Methods 6010C and 7470A.

3A. Total and dissolved arsenic were detected in the method blank for batch 51574. Total and dissolved arsenic, cadmium and chromium were detected in the method blank for batch 51695. Total and dissolved silver were detected in the method blanks for batch 51696 and 51872. Total and dissolved arsenic, lead and silver were detected in the method blank for batch 51840. The associated field samples were qualified as non-detect for these metals if the sample concentrations were less than five times the blank values. See attached qualification summary for details of the qualifications.

6. Sample locations G4MW016, G4DUP-01, G4MW023, G4MW043, G4MW18(012611), G4MW30(012611), G4MW29(012711) and G4MW36(012711) were used as the MS/MSDs for method 6010C. The recoveries and RPDs were acceptable.

Sample locations DUP02(012511), G4MW022, G4DUP-01, G4MW023, G4MW043, G4MW040, G4MW30(012611), G4MW24(012711) and G4MW29(012711) were used as MS/MSDs for mercury. The recoveries and RPDs were acceptable.

7. Sample location DUP-02(012511) was collected as a field duplicate for G4MW32(012511). The RPDs were acceptable at less than 40%.

Sample location G4DUP-01_20110126 was collected as a field duplicate of G4MW016_20110126. The RPDs were acceptable at less than 40%.

HUNTER STEWART
ELECTRONIC VALIDATION REVIEW REPORT
SDG: MA26019
FST-39

GENERAL CHEMISTRY

Items Reviewed	DQM Deficiency		Qualification Applied	
	No	Yes	No	Yes
1. Holding times/Preservation	DQM		DQM	
2. Reporting limits	M		M	
3. Blanks				
A. Method blanks	DQM		DQM	
B. Equipment blanks	NA		NA	
4. Lab Duplicate	M		M	
5. Laboratory control sample (LCS) A. LCS %R	DQM		DQM	
B. LCS duplicate (LCSD) %R	DQM		DQM	
C. LCS/LCSD RPD	DQM		DQM	
6. Matrix spike (MS)				
A. MS %R		DQM		DQM
B. MS duplicate (MSD) %R		DQM		DQM
C. MS/MSD precision (RPD)		DQM		DQM
7. Field/Lab Duplicate precision (RPD)	DQM		DQM	

M – Manual Review %R - percent recovery RPD - relative percent difference
DQM – Data Qualification Module

Comments:
This section presents a discussion of any additions or changes to the electronic data validation for compounds analyzed by Methods 353.2 – Nitrate/Nirite, SM2320B – Alkalinity, 300.0 – Sulfate/Chloride and TOC – SM5310C.

3. Several samples required a dilution for sulfate and nitrate due to elevated concentrations.

4. Sample location G4MW040 was used as the laboratory duplicate for sulfate. The RPD was acceptable.

6. Sample location G4MW016 was used as the MS/MSD for nitrate. The recovery of nitrate was below the control limit in the MS and the MSD. The RPD for nitrate was above the control limit. The parent sample was qualified as estimated for nitrate.

   Sample location G4MW040 was used as the MS/MSD for nitrate. The recovery of nitrate was below the control limit in the MS and the MSD. The parent sample was qualified as estimated for nitrate.

   Sample locations G4DUP-01 and G4MW040 were used as MS/MSDs for alkalinity and chloride. The recoveries and RPDs were acceptable.

   Sample location G4MW040 was used as the MS/MSD for nitrite. The recoveries of nitrite were below the control limit in the MS and the MSD. The parent sample was qualified as estimated for nitrite.

   Sample location G4MW016 was used as the MS/MSD for TOC. The recoveries and RPD were acceptable.

7. Sample location G4DUP-01_20110126 was collected as a field duplicate of G4MW016_20110126. The RPDs were acceptable at less than 40%.

SDG	Sample ID	Method	Analyte	Result	T or D	Units	Qualifier	Reason	Dilution
MA26019	G4MW016_20110126	E353.2	Nitrate	<0.020		mg/l	UJ	MS/MSD Recovery and MS/MSD RPD	1
MA26019	G4MW016_20110126	SW6010	Arsenic	0.0048	T	mg/l	UB	Blank Contamination	1
MA26019	G4MW017_20110126	SW6010	Chromium	0.0021	T	mg/l	UB	Blank Contamination	1
MA26019	G4MW017_20110126	SW6010	Chromium	0.0024	D	mg/l	UB	Blank Contamination	1
MA26019	G4MW017_20110126	SW8270	Benzo(a)pyrene	<1.0		ug/l	UJ	LCS Recovery	1
MA26019	G4MW023_20110127	SW6010	Arsenic	0.0074	T	mg/l	UB	Blank Contamination	1
MA26019	G4MW023_20110127	SW6010	Chromium	0.0053	T	mg/l	UB	Blank Contamination	1
MA26019	G4MW023_20110127	SW6010	Arsenic	0.0041	D	mg/l	UB	Blank Contamination	1
MA26019	G4MW023_20110127	SW8270	Benzo(a)anthracene	<1.0		ug/l	UJ	MS/MSD Recovery	1
MA26019	G4MW023_20110127	SW8270	bis(2-Ethylhexyl)phthalate	<5.1		ug/l	R	MS/MSD Recovery	1
MA26019	G4MW023_20110127	SW8270	Di-n-octyl phthalate	<5.1		ug/l	R	MS/MSD Recovery	1
MA26019	G4MW023_20110127	SW8270	Dibenzo(a,h)anthracene	<1.0		ug/l	R	MS/MSD Recovery	1
MA26019	G4MW023_20110127	SW8270	Pyrene	<1.0		ug/l	UJ	MS/MSD Recovery	1
MA26019	G4MW023_20110127	SW8270	Benzo(g,h,i)perylene	<1.0		ug/l	R	MS/MSD Recovery	1
MA26019	G4MW023_20110127	SW8270	Indeno(1,2,3-cd)pyrene	<1.0		ug/l	R	MS/MSD Recovery	1

SDG	Sample ID	Method	Analyte	Result	T or D	Units	Qualifier	Reason	Dilution
MA26019	G4MW023_20110127	SW8270	Benzo(a)pyrene	<1.0		ug/l	UJ	LCS Recovery	1
MA26019	G4MW023_20110127	SW8270	2-Chloronaphthalene	<1.0		ug/l	UJ	MS Recovery	1
MA26019	G4MW023_20110127	SW8270	Benzyl Butyl Phthalate	<5.1		ug/l	UJ	MS/MSD Recovery	1
MA26019	G4MW023_20110127	SW8270	p-Chloroaniline	<1.0		ug/l	R	MSD Recovery	1
MA26019	G4MW023_20110127	SW8270	1,2-Benz-phenanthracene	<1.0		ug/l	UJ	MS/MSD Recovery	1
MA26019	G4MW027_20110127	SW6010	Chromium	0.0034	T	mg/l	UB	Blank Contamination	1
MA26019	G4MW027_20110127	SW8270	Benzo(a)pyrene	<1.0		ug/l	UJ	LCS Recovery	1
MA26019	G4MW034_20110126	SW6010	Chromium	0.0044	T	mg/l	UB	Blank Contamination	1
MA26019	G4MW034_20110126	SW6010	Chromium	0.0022	D	mg/l	UB	Blank Contamination	1
MA26019	G4MW034_20110126	SW8270	Benzo(a)pyrene	<1.0		ug/l	UJ	LCS Recovery	1
MA26019	G4MW035_20110126	SW6010	Chromium	0.0035	T	mg/l	UB	Blank Contamination	1
MA26019	G4MW035_20110126	SW8270	Benzo(a)pyrene	<1.0		ug/l	UJ	LCS Recovery	1
MA26019	G4MW037_20110127	SW6010	Arsenic	0.009	D	mg/l	UB	Blank Contamination	1
MA26019	G4MW037_20110127	SW6010	Arsenic	0.0057	T	mg/l	UB	Blank Contamination	1
MA26019	G4MW037_20110127	SW6010	Chromium	0.0042	T	mg/l	UB	Blank Contamination	1

SDG	Sample ID	Method	Analyte	Result	T or D	Units	Qualifier	Reason	Dilution
MA26019	G4MW037_20110127	SW8270	Benzo(a)pyrene	<1.0		ug/l	UJ	LCS Recovery	1
MA26019	G4MW040_20110128	E353.2	Nitrite-N	<0.020		mg/l	UJ	MS/MSD Recovery	1
MA26019	G4MW040_20110128	E353.2	Nitrate	0.34		mg/l	J	MS/MSD Recovery	1
MA26019	G4MW040_20110128	SW6010	Lead	0.025	T	mg/l	UB	Blank Contamination	1
MA26019	G4MW040_20110128	SW6010	Arsenic	0.0057	T	mg/l	UB	Blank Contamination	1
MA26019	G4MW040_20110128	SW6010	Lead	0.014	D	mg/l	UB	Blank Contamination	1
MA26019	G4MW040_20110128	SW6010	Arsenic	0.0059	D	mg/l	UB	Blank Contamination	1
MA26019	G4MW040_20110128	SW8270	Benzo(a)pyrene	<1.0		ug/l	UJ	LCS Recovery	1
MA26019	G4MW043_20110127	SW8270	Benzo(a)pyrene	<1.0		ug/l	UJ	LCS Recovery	1
MA26019	G4MW043_20110127	SW8270	Dibenzo(a,h)anthracene	<1.0		ug/l	UJ	MS/MSD Recovery	1
MA26019	G4MW043_20110127	SW8270	p-Chloroaniline	<1.0		ug/l	R	MS/MSD Recovery	1
MA26019	G4MW043_20110127	SW8270	Di-n-octyl phthalate	<5.1		ug/l	UJ	MS/MSD Recovery	1
MA26019	G4MW043_20110127	SW8270	Benzo(g,h,i)perylene	<1.0		ug/l	UJ	MS/MSD Recovery	1
MA26019	G4MW043_20110127	SW8270	Benzo(a)anthracene	<1.0		ug/l	UJ	MS/MSD Recovery	1
MA26019	G4MW043_20110127	SW8270	Indeno(1,2,3-cd)pyrene	<1.0		ug/l	UJ	MS/MSD Recovery	1

SDG	Sample ID	Method	Analyte	Result	T or D	Units	Qualifier	Reason	Dilution
MA26019	G4MW044_20110126	SW6010	Chromium	0.0041	T	mg/l	UB	Blank Contamination	1
MA26019	G4MW044_20110126	SW8270	Benzo(a)pyrene	<1.0		ug/l	UJ	LCS Recovery	1
MA26019	G4MW045_20110126	SW6010	Arsenic	0.0061	T	mg/l	UB	Blank Contamination	1
MA26019	G4MW045_20110126	SW6010	Arsenic	0.007	D	mg/l	UB	Blank Contamination	1
MA26019	G4MW045_20110126	SW8270	Benzo(a)pyrene	<1.0		ug/l	UJ	LCS Recovery	1
MA26019	G4MW046_20110127	SW6010	Chromium	0.0022	D	mg/l	UB	Blank Contamination	1
MA26019	G4MW046_20110127	SW6010	Cadmium	0.0006	T	mg/l	UB	Blank Contamination	1
MA26019	G4MW046_20110127	SW8270	Benzo(a)pyrene	<1.0		ug/l	UJ	LCS Recovery	1
MA26019	G4MW10 (012711)	SW8270	Benzo(a)pyrene	<1.0		ug/l	UJ	LCS Recovery	1
MA26019	G4MW11 (012711)	SW6010	Silver	0.0006	T	mg/l	UB	Blank Contamination	1
MA26019	G4MW11 (012711)	SW8270	Benzo(a)pyrene	<1.0		ug/l	UJ	LCS Recovery	1
MA26019	G4MW13 (012711)	SW8270	3-Nitroaniline	<2.0		ug/l	R	MS Recovery	1
MA26019	G4MW13 (012711)	SW8270	Indeno(1,2,3-cd)pyrene	<1.0		ug/l	UJ	MS/MSD Recovery	1
MA26019	G4MW13 (012711)	SW8270	N-Nitrosodiphenylamine	<1.0		ug/l	UJ	MS/MSD RPD	1
MA26019	G4MW13 (012711)	SW8270	Pyrene	<1.0		ug/l	UJ	MS Recovery	1

SDG	Sample ID	Method	Analyte	Result	T or D	Units	Qualifier	Reason	Dilution
MA26019	G4MW13 (012711)	SW8270	2-Methyl naphthalene	<1.0		ug/l	UJ	MSD Recovery	1
MA26019	G4MW13 (012711)	SW8270	Anthracene	<1.0		ug/l	UJ	MS Recovery	1
MA26019	G4MW13 (012711)	SW8270	Benzo(g,h,i)perylene	<1.0		ug/l	UJ	MS/MSD Recovery	1
MA26019	G4MW13 (012711)	SW8270	Fluoranthene	<1.0		ug/l	UJ	MS Recovery	1
MA26019	G4MW13 (012711)	SW8270	Dibenzo(a,h)anthracene	<1.0		ug/l	UJ	MS/MSD Recovery	1
MA26019	G4MW13 (012711)	SW8270	1,2-Benz-phenanthracene	<1.0		ug/l	UJ	MS/MSD Recovery	1
MA26019	G4MW13 (012711)	SW8270	Benzyl Butyl Phthalate	<5.1		ug/l	UJ	MS Recovery	1
MA26019	G4MW13 (012711)	SW8270	Carbazole	<1.0		ug/l	UJ	MS Recovery	1
MA26019	G4MW13 (012711)	SW8270	Hexachloro-1,3-Butadiene	<1.0		ug/l	UJ	MSD Recovery	1
MA26019	G4MW13 (012711)	SW8270	Hexachlorobenzene	<1.0		ug/l	UJ	MS Recovery	1
MA26019	G4MW13 (012711)	SW8270	Di-n-octyl phthalate	<5.1		ug/l	UJ	MS/MSD Recovery	1
MA26019	G4MW13 (012711)	SW8270	bis(2-Chloroethoxy)methane	<1.0		ug/l	UJ	MS/MSD Recovery	1
MA26019	G4MW13 (012711)	SW8270	p-Chloroaniline	<1.0		ug/l	R	MS/MSD Recovery	1
MA26019	G4MW13 (012711)	SW8270	4-Bromophenyl Phenyl Ether	<1.0		ug/l	UJ	MS Recovery	1
MA26019	G4MW13 (012711)	SW8270	p-Nitroaniline	<2.0		ug/l	R	MS Recovery	1

SDG	Sample ID	Method	Analyte	Result	T or D	Units	Qualifier	Reason	Dilution
MA26019	G4MW13 (012711)	SW8270	Naphthalene	<1.0		ug/l	UJ	MSD Recovery	1
MA26019	G4MW13 (012711)	SW8270	Benzo(a)anthracene	<1.0		ug/l	UJ	MS/MSD Recovery	1
MA26019	G4MW14 (012511)	SW8260	Benzene	<1.0		ug/l	UJ	LCS/LCSD RPD	1
MA26019	G4MW14 (012511)	SW8260	1,1-Dichloroethylene	<1.0		ug/l	UJ	LCS/LCSD RPD	1
MA26019	G4MW14 (012511)	SW8260	1,1-Dichloroethane	<1.0		ug/l	UJ	LCS/LCSD RPD	1
MA26019	G4MW14 (012511)	SW8260	1,1,1-Trichloroethane	<1.0		ug/l	UJ	LCS/LCSD RPD	1
MA26019	G4MW14 (012511)	SW8260	Chloroform	<1.0		ug/l	UJ	LCS/LCSD RPD	1
MA26019	G4MW14 (012511)	SW8260	Carbon Tetrachloride	<1.0		ug/l	UJ	LCS/LCSD RPD	1
MA26019	G4MW14 (012511)	SW8260	Ethylbenzene	<1.0		ug/l	UJ	LCS/LCSD RPD	1
MA26019	G4MW14 (012511)	SW8260	trans-1,2-Dichloroethene	<1.0		ug/l	UJ	LCS/LCSD RPD	1
MA26019	G4MW14 (012511)	SW8260	Xylenes (total)	<1.0		ug/l	UJ	LCS/LCSD RPD	1
MA26019	G4MW14 (012511)	SW8260	Bromodichloromethane	<1.0		ug/l	UJ	LCS/LCSD RPD	1
MA26019	G4MW14 (012511)	SW8260	Styrene	<1.0		ug/l	UJ	LCS/LCSD RPD	1
MA26019	G4MW14 (012511)	SW8260	Tribromomethane	<1.0		ug/l	UJ	LCS/LCSD RPD	1
MA26019	G4MW14 (012511)	SW8260	Chlorodibromomethane	<1.0		ug/l	UJ	LCS Recovery and LCS/LCSD RPD	1

SDG	Sample ID	Method	Analyte	Result	T or D	Units	Qualifier	Reason	Dilution
MA26019	G4MW14 (012511)	SW8260	1,4-Dichlorobenzene	<1.0		ug/l	UJ	LCS/LCSD RPD	1
MA26019	G4MW18 (012611)	SW8270	Benzo(a)pyrene	<1.0		ug/l	UJ	LCS Recovery	1
MA26019	G4MW20 (012711)	SW8270	Benzo(a)pyrene	<1.0		ug/l	UJ	LCS Recovery	1
MA26019	G4MW24 (012711)	SW8270	Benzo(a)pyrene	<1.0		ug/l	UJ	LCS Recovery	1
MA26019	G4MW25 (012711)	SW8270	Benzo(a)pyrene	<1.0		ug/l	UJ	LCS Recovery	1
MA26019	G4MW29 (012711)	SW6010	Silver	0.0009	T	mg/l	UB	Blank Contamination	1
MA26019	G4MW30 (012611)	SW8270	Benzo(a)pyrene	<1.0		ug/l	UJ	LCS Recovery	1
MA26019	G4MW31 (012511)	SW8260	Carbon Tetrachloride	<1.0		ug/l	UJ	LCS/LCSD RPD	1
MA26019	G4MW31 (012511)	SW8260	Bromodichloromethane	<1.0		ug/l	UJ	LCS/LCSD RPD	1
MA26019	G4MW31 (012511)	SW8260	Xylenes (total)	<1.0		ug/l	UJ	LCS/LCSD RPD	1
MA26019	G4MW31 (012511)	SW8260	Ethylbenzene	<1.0		ug/l	UJ	LCS/LCSD RPD	1
MA26019	G4MW31 (012511)	SW8260	1,1-Dichloroethane	<1.0		ug/l	UJ	LCS/LCSD RPD	1
MA26019	G4MW31 (012511)	SW8260	Tribromomethane	<1.0		ug/l	UJ	LCS/LCSD RPD	1
MA26019	G4MW31 (012511)	SW8260	1,1,1-Trichloroethane	<1.0		ug/l	UJ	LCS/LCSD RPD	1
MA26019	G4MW31 (012511)	SW8260	Benzene	<1.0		ug/l	UJ	LCS/LCSD RPD	1

SDG	Sample ID	Method	Analyte	Result	T or D	Units	Qualifier	Reason	Dilution
MA26019	G4MW31 (012511)	SW8260	Chloroform	<1.0		ug/l	UJ	LCS/LCSD RPD	1
MA26019	G4MW31 (012511)	SW8260	trans-1,2-Dichloroethene	<1.0		ug/l	UJ	LCS/LCSD RPD	1
MA26019	G4MW31 (012511)	SW8260	Chlorodibromomethane	<1.0		ug/l	UJ	LCS Recovery and LCS/LCSD RPD	1
MA26019	G4MW31 (012511)	SW8260	1,4-Dichlorobenzene	<1.0		ug/l	UJ	LCS/LCSD RPD	1
MA26019	G4MW31 (012511)	SW8260	Styrene	<1.0		ug/l	UJ	LCS/LCSD RPD	1
MA26019	G4MW31 (012511)	SW8260	1,1-Dichloroethylene	<1.0		ug/l	UJ	LCS/LCSD RPD	1
MA26019	G4MW32 (012511)	SW8260	1,4-Dichlorobenzene	<1.0		ug/l	UJ	LCS/LCSD RPD	1
MA26019	G4MW32 (012511)	SW8260	Benzene	<1.0		ug/l	UJ	LCS/LCSD RPD	1
MA26019	G4MW32 (012511)	SW8260	1,1-Dichloroethylene	<1.0		ug/l	UJ	LCS/LCSD RPD	1
MA26019	G4MW32 (012511)	SW8260	1,1-Dichloroethane	<1.0		ug/l	UJ	LCS/LCSD RPD	1
MA26019	G4MW32 (012511)	SW8260	Bromodichloromethane	<1.0		ug/l	UJ	LCS/LCSD RPD	1
MA26019	G4MW32 (012511)	SW8260	Tribromomethane	<1.0		ug/l	UJ	LCS/LCSD RPD	1
MA26019	G4MW32 (012511)	SW8260	1,1,1-Trichloroethane	<1.0		ug/l	UJ	LCS/LCSD RPD	1
MA26019	G4MW32 (012511)	SW8260	Chloroform	<1.0		ug/l	UJ	LCS/LCSD RPD	1
MA26019	G4MW32 (012511)	SW8260	Carbon Tetrachloride	<1.0		ug/l	UJ	LCS/LCSD RPD	1

SDG	Sample ID	Method	Analyte	Result	T or D	Units	Qualifier	Reason	Dilution
MA26019	G4MW32 (012511)	SW8260	trans-1,2-Dichloroethene	<1.0		ug/l	UJ	LCS/LCSD RPD	1
MA26019	G4MW32 (012511)	SW8260	Chlorodibromomethane	<1.0		ug/l	UJ	LCS Recovery and LCS/LCSD RPD	1
MA26019	G4MW32 (012511)	SW8260	Styrene	<1.0		ug/l	UJ	LCS/LCSD RPD	1
MA26019	G4MW32 (012511)	SW8260	Ethylbenzene	<1.0		ug/l	UJ	LCS/LCSD RPD	1
MA26019	G4MW32 (012511)	SW8260	Xylenes (total)	<1.0		ug/l	UJ	LCS/LCSD RPD	1
MA26019	G4MW32 (012511)	SW8270	Benzo(b)fluoranthene	<1.0		ug/l	UJ	MS/MSD RPD	1
MA26019	G4MW32 (012511)	SW8270	1,2-Benz-phenanthracene	<1.0		ug/l	UJ	MSD Recovery	1
MA26019	G4MW32 (012511)	SW8270	Benzo(a)anthracene	<1.0		ug/l	UJ	MSD Recovery	1
MA26019	G4MW32 (012511)	SW8270	Benzo(a)pyrene	<1.0		ug/l	UJ	MS/MSD RPD	1
MA26019	G4MW32 (012511)	SW8270	Benzo(g,h,i)perylene	<1.0		ug/l	UJ	MS/MSD Recovery and MS/MSD RPD	1
MA26019	G4MW32 (012511)	SW8270	Di-n-octyl phthalate	<5.0		ug/l	R	MSD Recovery	1
MA26019	G4MW32 (012511)	SW8270	bis(2-Ethylhexyl)phthalate	<5.0		ug/l	R	MSD Recovery	1
MA26019	G4MW32 (012511)	SW8270	p-Chloroaniline	<1.0		ug/l	UJ	MS/MSD RPD	1
MA26019	G4MW32 (012511)	SW8270	Dibenzo(a,h)anthracene	<1.0		ug/l	UJ	MS/MSD Recovery and MS/MSD RPD	1
MA26019	G4MW32 (012511)	SW8270	Indeno(1,2,3-cd)pyrene	<1.0		ug/l	UJ	MS/MSD Recovery and MS/MSD RPD	1

SDG	Sample ID	Method	Analyte	Result	T or D	Units	Qualifier	Reason	Dilution
MA26019	G4MW33 (012711)	SW8270	Benzo(a)pyrene	<1.0		ug/l	UJ	LCS Recovery	1
MA26019	G4MW39 (012611)	SW8270	Benzo(a)pyrene	<1.0		ug/l	UJ	LCS Recovery	1
MA26019	TRIP BLANK (012511)	SW8260	Tribromomethane	<1.0		ug/l	UJ	LCS/LCSD RPD	1
MA26019	TRIP BLANK (012511)	SW8260	1,1-Dichloroethylene	<1.0		ug/l	UJ	LCS/LCSD RPD	1
MA26019	TRIP BLANK (012511)	SW8260	Bromodichloromethane	<1.0		ug/l	UJ	LCS/LCSD RPD	1
MA26019	TRIP BLANK (012511)	SW8260	1,1,1-Trichloroethane	<1.0		ug/l	UJ	LCS/LCSD RPD	1
MA26019	TRIP BLANK (012511)	SW8260	Benzene	<1.0		ug/l	UJ	LCS/LCSD RPD	1
MA26019	TRIP BLANK (012511)	SW8260	Chloroform	<1.0		ug/l	UJ	LCS/LCSD RPD	1
MA26019	TRIP BLANK (012511)	SW8260	trans-1,2-Dichloroethene	<1.0		ug/l	UJ	LCS/LCSD RPD	1
MA26019	TRIP BLANK (012511)	SW8260	Xylenes (total)	<1.0		ug/l	UJ	LCS/LCSD RPD	1
MA26019	TRIP BLANK (012511)	SW8260	Chlorodibromomethane	<1.0		ug/l	UJ	LCS Recovery and LCS/LCSD RPD	1
MA26019	TRIP BLANK (012511)	SW8260	1,4-Dichlorobenzene	<1.0		ug/l	UJ	LCS/LCSD RPD	1
MA26019	TRIP BLANK (012511)	SW8260	Styrene	<1.0		ug/l	UJ	LCS/LCSD RPD	1
MA26019	TRIP BLANK (012511)	SW8260	Ethylbenzene	<1.0		ug/l	UJ	LCS/LCSD RPD	1
MA26019	TRIP BLANK (012511)	SW8260	Carbon Tetrachloride	<1.0		ug/l	UJ	LCS/LCSD RPD	1

SDG	Sample ID	Method	Analyte	Result	T or D	Units	Qualifier	Reason	Dilution
MA26019	TRIP BLANK (012511)	SW8260	1,1-Dichloroethane	<1.0		ug/l	UJ	LCS/LCSD RPD	1
MA26019	Trip Blank (012611)	SW8260	Chlorodibromomethane	<1.0		ug/l	UJ	LCS Recovery and LCS/LCSD RPD	1
MA26019	Trip Blank (012611)	SW8260	1,1-Dichloroethylene	<1.0		ug/l	UJ	LCS/LCSD RPD	1
MA26019	Trip Blank (012611)	SW8260	1,1-Dichloroethane	<1.0		ug/l	UJ	LCS/LCSD RPD	1
MA26019	Trip Blank (012611)	SW8260	Bromodichloromethane	<1.0		ug/l	UJ	LCS/LCSD RPD	1
MA26019	Trip Blank (012611)	SW8260	Tribromomethane	<1.0		ug/l	UJ	LCS/LCSD RPD	1
MA26019	Trip Blank (012611)	SW8260	1,1,1-Trichloroethane	<1.0		ug/l	UJ	LCS/LCSD RPD	1
MA26019	Trip Blank (012611)	SW8260	Benzene	<1.0		ug/l	UJ	LCS/LCSD RPD	1
MA26019	Trip Blank (012611)	SW8260	Chloroform	<1.0		ug/l	UJ	LCS/LCSD RPD	1
MA26019	Trip Blank (012611)	SW8260	Carbon Tetrachloride	<1.0		ug/l	UJ	LCS/LCSD RPD	1
MA26019	Trip Blank (012611)	SW8260	Xylenes (total)	<1.0		ug/l	UJ	LCS/LCSD RPD	1
MA26019	Trip Blank (012611)	SW8260	1,4-Dichlorobenzene	<1.0		ug/l	UJ	LCS/LCSD RPD	1
MA26019	Trip Blank (012611)	SW8260	Styrene	<1.0		ug/l	UJ	LCS/LCSD RPD	1
MA26019	Trip Blank (012611)	SW8260	Ethylbenzene	<1.0		ug/l	UJ	LCS/LCSD RPD	1
MA26019	Trip Blank (012611)	SW8260	trans-1,2-Dichloroethene	<1.0		ug/l	UJ	LCS/LCSD RPD	1

HUNTER STEWART
ELECTRONIC VALIDATION REVIEW REPORT
SDG: MD28024
FST-39

Analytical data were evaluated in accordance with applicable USEPA SW-846 method requirements, "USEPA Contract Laboratory Program National Functional Guidelines for Organic Data Review" (October 1999), "USEPA Contract Laboratory Program National Functional Guidelines for Inorganic Data Review" (July 2002), analytical method control criteria, the analytical laboratory Quality Assurance Control Limits, the Fort Stewart Military Reservation and Hunter Army Airfield Quality Assurance Project Plan (ARCADIS-2008), and professional judgment.

The data review summarized in this report includes a review of all sample collection documentation and the electronic data validation of the analytical data housed in the project database. Sample collection documentation included sample collection logs and chains of custody. The electronic data validation was performed utilizing the EQuIS Data Qualification Module (DQM). DQM checks for the following parameters:

- Holding times and preservation;
- Blank contamination;
    1. Method blanks,
    2. Trip blanks,
    3. Equipment blanks;
- Matrix spike and Duplicate sample recovery;
- Matrix Spike and Matrix Spike Duplicate relative percent differences;
- Laboratory Control Sample and Duplicate recovery;
- Laboratory Control Sample and Duplicate relative percent differences;
- Surrogate recovery (organic analyses only); and
- Field duplicate relative percent difference.

Manual review was performed for the following items:

- Sample dilutions and reporting limits;
- Case Narratives; and
- Laboratory Duplicates

Data was generated by Shealy Environmental Services, Inc. – West Columbia, South Carolina. Data qualifiers were applied electronically to the database with any additional qualifiers added manually. A summary of the data as amended by data qualifiers is included with the original hard copy reports.

The attached table summarizes the data that were qualified due to QC deficiencies. The table indicates compounds/analytes qualified based on electronic and manual validation. Refer to the associated method section of the validation checklist for a detailed explanation of qualification. All other data in these SDGs are considered usable as reported.

HUNTER STEWART
ELECTRONIC VALIDATION REVIEW REPORT
SDG: MD28024
FST-39

The following list of data qualifiers and definitions were applied in accordance with qualification criteria defined in the greater than guidance documents:

UB Compound/analyte detected in blank or associated blank, qualified as a non-detect at listed value.

J The analyte was positively identified, but the associated numerical value is the approximate concentration of the analyte in the sample.

UJ The analyte was not detected greater than the reporting limit; however, the reported quantitation limit is approximate and may, or may not represent the actual limit of quantitation necessary to accurately and precisely measure analyte in the sample.

R The sample result is rejected due to serious deficiencies in the ability to analyze the sample and meet quality control criteria; and the presence or absence of the analyte cannot be verified.

U Not detected at the quantitative reporting limit

DQM RUN BY:	Rachelle Borne	06/23/11
REVIEW PERFORMED BY:	Rachelle Borne	06/24/11
SIGNATURE:	Rachelle Borne	06/24/11
PEER REVIEW:	Todd Church	6/24/11

HUNTER STEWART
ELECTRONIC VALIDATION REVIEW REPORT
SDG: MD28024
FST-39

The following samples were included in this validation:

SDG	Sample ID	Sample Date	Parent Sample
MD28024	G4MW053(0.5-1.0)	04/27/11	
MD28024	G4MW053(3.0-3.5)	04/27/11	
MD28024	F39-SB-013(0.5-1.0)	04/27/11	
MD28024	F39-SB-013(3.0-3.5)	04/27/11	
MD28024	F39-SB-014(0.5-1.0)	04/27/11	
MD28024	F39-SB-014(3.0-3.5)	04/27/11	

HUNTER STEWART
ELECTRONIC VALIDATION REVIEW REPORT
SDG: MD28024
FST-39

ANALYTICAL DATA PACKAGE DOCUMENTATION

GENERAL INFORMATION

Items Reviewed	Reported		Performance Acceptable		Not Required
	No	Yes	No	Yes	
1. Sample results		X		X	
2. Parameters analyzed		X		X	
3. Methods of analysis		X		X	
4. Reporting limits of analysis		X		X	
5. Master tracking list		X		X	
6. Sample collection date		X		X	
7. Laboratory sample received date		X		X	
8. Sample preparation/extraction date		X		X	
9. Sample analysis date		X		X	
10. Copy of chain-of-custody form signed by lab sample custodian		X		X	
11. Narrative summary of QA or sample problems provided		X		X	
12. Laboratory Signature		X		X	
13. South Carolina Certification Number		X		X	

QA - quality assurance

The analytical report was complete with the following exceptions or notations.

Note: The laboratory reported values between the quantitative reporting limit and the method detection limit as estimated concentrations. The "J" qualifier was retained in this validation. Non-detect values are reported at the quantitative reporting limit.

HUNTER STEWART
ELECTRONIC VALIDATION REVIEW REPORT
SDG: MD28024
FST-39

SEMIVOLATILE ORGANIC COMPOUNDS

Items Reviewed	DQM Deficiency		Qualification Applied	
	No	Yes	No	Yes
1. Holding times/Preservation	DQM		DQM	
2. Reporting limits	M		M	
3. Blanks				
A. Method blanks	DQM		DQM	
B. Equipment blanks	NA		NA	
4. Surrogate spike recoveries	DQM		DQM	
5. Laboratory control sample (LCS) A. LCS %R	DQM		DQM	
B. LCS duplicate (LCSD) %R	NA		NA	
C. LCS/LCSD RPD	NA		NA	
6. Matrix spike (MS)				
A. MS %R	DQM		DQM	
B. MS duplicate (MSD) %R	DQM		DQM	
C. MS/MSD precision (RPD)		DQM		DQM
7. Field Duplicate precision (RPD)	NA		NA	

M – Manual Review %R - percent recovery RPD - relative percent difference
DQM – Data Qualification Module

Comments:
This section presents a discussion of any additions or changes to the electronic data validation for compounds analyzed by Method 8270D.

6. Sample location G4MW053(0.5-10) was used as the MS/MSD. The RPDs between the MS/MSD pair were above the control limits for 2-chloronaphthalene and 2,4-dinitrophenol. The parent sample was qualified as estimated for these compounds.

Hunter Stewart
FST-39-5

SDG	Sample ID	Method	Analyte	Results	Units	Qualifier	Reason	Dilution
MD28024	G4MW053(0.5-1.0)	SW8270	2,4-Dinitrophenol	<340.0	ug/kg	UJ	MS/MSD RPD	1
MD28024	G4MW053(0.5-1.0)	SW8270	2-Chloronaphthalene	<69.0	ug/kg	UJ	MS/MSD RPD	1

HUNTER STEWART
ELECTRONIC VALIDATION REVIEW REPORT
SDGs: ME10010 and ME20017
FST-39

Analytical data were evaluated in accordance with applicable USEPA SW-846 method requirements, "USEPA Contract Laboratory Program National Functional Guidelines for Organic Data Review" (October 1999), "USEPA Contract Laboratory Program National Functional Guidelines for Inorganic Data Review" (July 2002), analytical method control criteria, the analytical laboratory Quality Assurance Control Limits, the Fort Stewart Military Reservation and Hunter Army Airfield Quality Assurance Project Plan (ARCADIS-2008), and professional judgment.

The data review summarized in this report includes a review of all sample collection documentation and the electronic data validation of the analytical data housed in the project database. Sample collection documentation included sample collection logs and chains of custody. The electronic data validation was performed utilizing the EQuIS Data Qualification Module (DQM). DQM checks for the following parameters:

- Holding times and preservation;
- Blank contamination;
    1. Method blanks,
    2. Trip blanks,
    3. Equipment blanks;
- Matrix spike and Duplicate sample recovery;
- Matrix Spike and Matrix Spike Duplicate relative percent differences;
- Laboratory Control Sample and Duplicate recovery;
- Laboratory Control Sample and Duplicate relative percent differences;
- Surrogate recovery (organic analyses only); and
- Field duplicate relative percent difference.

Manual review was performed for the following items:

- Sample dilutions and reporting limits;
- Case Narratives; and
- Laboratory Duplicates

Data was generated by Shealy Environmental Services, Inc. – West Columbia, South Carolina. Data qualifiers were applied electronically to the database with any additional qualifiers added manually. A summary of the data as amended by data qualifiers is included with the original hard copy reports.

The attached table summarizes the data that were qualified due to QC deficiencies. The table indicates compounds/analytes qualified based on electronic and manual validation. Refer to the associated method section of the validation checklist for a detailed explanation of qualification. All other data in these SDGs are considered usable as reported.

HUNTER STEWART
ELECTRONIC VALIDATION REVIEW REPORT
SDGs: ME10010 and ME20017
FST-39

The following list of data qualifiers and definitions were applied in accordance with qualification criteria defined in the greater than guidance documents:

UB Compound/analyte detected in blank or associated blank, qualified as a non-detect at listed value.

J The analyte was positively identified, but the associated numerical value is the approximate concentration of the analyte in the sample.

UJ The analyte was not detected greater than the reporting limit; however, the reported quantitation limit is approximate and may, or may not represent the actual limit of quantitation necessary to accurately and precisely measure analyte in the sample.

R The sample result is rejected due to serious deficiencies in the ability to analyze the sample and meet quality control criteria; and the presence or absence of the analyte cannot be verified.

U Not detected at the quantitative reporting limit

DQM RUN BY:	Rachelle Borne	07/13/11
REVIEW PERFORMED BY:	Rachelle Borne	07/13/11
SIGNATURE:	Rachelle Borne	07/14/11
PEER REVIEW:	Dennis Capria	07/14/11

HUNTER STEWART
ELECTRONIC VALIDATION REVIEW REPORT
SDGs: ME10010 and ME20017
FST-39

The following samples were included in this validation:

SDG	Sample ID	Sample Date	Parent Sample
ME10010	G4MW-048(050611)	05/06/11	
ME10010	G4MW-049(050611)	05/06/11	
ME10010	G4MW-050(050611)	05/06/11	
ME10010	G4MW-051(050611)	05/06/11	
ME10010	G4MW-052(050611)	05/06/11	
ME10010	G4MW-053(050611)	05/06/11	
ME10010	G4MW-054(050611)	05/06/11	
ME10010	Trip Blank(050611)	05/06/11	
ME20017	F39SB015(0-0.5)	05/19/11	
ME20017	F39SB015(3-3.5)	05/19/11	
ME20017	F39SB016(0-0.5)	05/19/11	
ME20017	F39SB016(3-3.5)	05/19/11	
ME20017	F39SB017(0-0.5)	05/19/11	
ME20017	F39SB017(3-3.5)	05/19/11	

HUNTER STEWART
ELECTRONIC VALIDATION REVIEW REPORT
SDGs: ME10010 and ME20017
FST-39

ANALYTICAL DATA PACKAGE DOCUMENTATION

GENERAL INFORMATION

Items Reviewed	Reported		Performance Acceptable		Not Required
	No	Yes	No	Yes	
1. Sample results		X		X	
2. Parameters analyzed		X		X	
3. Methods of analysis		X		X	
4. Reporting limits of analysis		X		X	
5. Master tracking list		X		X	
6. Sample collection date		X		X	
7. Laboratory sample received date		X		X	
8. Sample preparation/extraction date		X		X	
9. Sample analysis date		X		X	
10. Copy of chain-of-custody form signed by lab sample custodian		X		X	
11. Narrative summary of QA or sample problems provided		X		X	
12. Laboratory Signature		X		X	
13. South Carolina Certification Number		X		X	

QA - quality assurance

The analytical report was complete with the following exceptions or notations.

Note: The laboratory reported values between the quantitative reporting limit and the method detection limit as estimated concentrations. The "J" qualifier was retained in this validation. Non-detect values are reported at the quantitative reporting limit.

HUNTER STEWART
ELECTRONIC VALIDATION REVIEW REPORT
SDGs: ME10010 and ME20017
FST-39

VOLATILE ORGANIC COMPOUNDS

Items Reviewed	DQM Deficiency		Qualification Applied	
	No	Yes	No	Yes
1. Holding times/Preservation	DQM		DQM	
2. Reporting limits	M		M	
3. Blanks				
A. Method blanks	DQM		DQM	
B. Equipment blanks	NA		NA	
C. Trip blanks	DQM		DQM	
4. Surrogate spike recoveries	DQM		DQM	
5. Laboratory control sample (LCS) A. LCS %R	DQM		DQM	
B. LCS duplicate (LCSD) %R	DQM		DQM	
C. LCS/LCSD RPD	DQM		DQM	
6. Matrix spike (MS)				
A. MS %R	NA		NA	
B. MS duplicate (MSD) %R	NA		NA	
C. MS/MSD precision (RPD)	NA		NA	
7. Field Duplicate precision (RPD)	NA		NA	

M – Manual Review %R - percent recovery RPD - relative percent difference
DQM – Data Qualification Module

Comments:
This section presents a discussion of any additions or changes to the electronic data validation for compounds analyzed by Method 8260B.

HUNTER STEWART
ELECTRONIC VALIDATION REVIEW REPORT
SDGs: ME10010 and ME20017
FST-39

SEMIVOLATILE ORGANIC COMPOUNDS

Items Reviewed	DQM Deficiency		Qualification Applied	
	No	Yes	No	Yes
1. Holding times/Preservation		DQM		DQM
2. Reporting limits	M		M	
3. Blanks				
A. Method blanks		DQM		DQM
B. Equipment blanks	NA		NA	
4. Surrogate spike recoveries		DQM		DQM
5. Laboratory control sample (LCS) A. LCS %R		DQM		DQM
B. LCS duplicate (LCSD) %R	NA		NA	
C. LCS/LCSD RPD	NA		NA	
6. Matrix spike (MS)				
A. MS %R		DQM		DQM
B. MS duplicate (MSD) %R		DQM		DQM
C. MS/MSD precision (RPD)		DQM		DQM
7. Field Duplicate precision (RPD)	NA		NA	

M – Manual Review %R - percent recovery RPD - relative percent difference
DQM – Data Qualification Module

Comments:
This section presents a discussion of any additions or changes to the electronic data validation for compounds analyzed by Method 8270D.

1. SDG (ME10010) Sample locations G4MW-052(050611) and G4MW-053(050611) were initially analyzed within the acceptable seven day holding time; however, one base neutral surrogate recovery was less than ten percent. The samples were re-analyzed 6 days beyond the seven day recommended holding time with similar results. All results were qualified as estimated for these two samples.

3A. SDG (ME20017) The compound 4-chloroaniline was detected in the method blank. The associated field samples were qualified as non-detect for this compound if the sample concentrations were less than five times the blank value.

4. SDG (ME10010) One base neutral surrogate recovery was less than 10% in sample locations G4MW-048(050611), G4MW-052(050611), G4MW-053(050611). All detected base neutral compounds were qualified as estimated and all non-detect base neutral results were qualified as rejected.

5A. SDG (ME20017) The recovery of hexachloroethane was below the control limit in the LCS. The recoveries of hexachlorobutadiene, hexachlorocylcopentadiene and hexachloroethane were below the control limit in the LCS for batch 60960. The associated field samples were qualified as estimated for these compounds.

6. SDG (ME10010) Sample location G4MW-048(050611) was used as the MS/MSD. Several recoveries and RPDs were outside the control limit for the base neutral compounds. The parent sample was already qualified as rejected for all base neutral compounds. Further qualification of the data is not warranted.

SDG (ME20017) Sample location F39SB015(0-0.5) was used as the MS/MSD. The recovery of 2,4-dinitrophenol was below the control limit in the MS. The RPD for this compound was above the control limit. The parent sample was qualified as estimated for 2,4-dinitrophenol.

SDG (ME20017) Sample location F39SB017(0-0.5) was used as the MS/MSD. The recoveries of 4,6-dinitro-2-methylphenol and Hexachlorocyclopentadiene were below the control limit in the MS. The parent sample was qualified as estimated for these compounds. The recovery of 2,4-dinitrophenol was less than ten percent in the MS. The parent sample was qualified as rejected for this compound. The RPDs for 2,4-dinitrophenol, 4,6-dinitro-2-methylphenol and Hexachlorocyclopentadiene. The parent sample was qualified as estimated for these compounds.

HUNTER STEWART
ELECTRONIC VALIDATION REVIEW REPORT
SDGs: ME10010 and ME20017
FST-39

METALS

Items Reviewed	DQM Deficiency		Qualification Applied	
	No	Yes	No	Yes
1. Holding times/Preservation	DQM		DQM	
2. Reporting limits	M		M	
3. Blanks				
A. Method blanks		DQM		DQM
B. Equipment blanks	NA		NA	
4. Laboratory control sample (LCS) A. LCS %R	DQM		DQM	
B. LCS duplicate (LCSD) %R	DQM		DQM	
C. LCS/LCSD RPD	DQM		DQM	
5. Matrix spike (MS)				
A. MS %R	DQM		DQM	
B. MS duplicate (MSD) %R	DQM		DQM	
C. MS/MSD precision (RPD)	DQM		DQM	
6. Field Duplicate precision (RPD)	NA		NA	
7. Total vs. Dissolved	M		M	

M – Manual Review %R - percent recovery RPD - relative percent difference
DQM – Data Qualification Module

Comments:

This section presents a discussion of any additions or changes to the electronic data validation for compounds analyzed by Methods 6010C and 7470A.

3A. SDG (ME10010) Arsenic and selenium were detected in the method blank. The associated field samples were qualified as non-detect for these metals if the sample concentrations were less than five times the blank values.

5. SDG (ME10010) Sample locations G4MW-053(050611) and G4MW-054(050611) were used as MS/MSDs for mercury. The recoveries and RPDs were acceptable.

SDG	Sample ID	Method	Analyte	Result	Units	RDL	Qualifier	Reason	Dilution
ME10010	G4MW-048(050611)	SW6010	Selenium	0.0077	mg/l	0	UB	Blank Contamination	1
ME10010	G4MW-048(050611)	SW6010	Selenium	0.0088	mg/l	0	UB	Blank Contamination	1
ME10010	G4MW-048(050611)	SW8270	N-Nitrosodiphenylamine		ug/l	1	R	Surrogate Recovery	1
ME10010	G4MW-048(050611)	SW8270	2,6-Dinitroluene		ug/l	2	R	Surrogate Recovery	1
ME10010	G4MW-048(050611)	SW8270	N-Nitroso di-n-propylamine		ug/l	1	R	Surrogate Recovery	1
ME10010	G4MW-048(050611)	SW8270	Hexachloroethane		ug/l	1	R	Surrogate Recovery	1
ME10010	G4MW-048(050611)	SW8270	4-Chlorophenyl Phenyl Ether		ug/l	1	R	Surrogate Recovery	1
ME10010	G4MW-048(050611)	SW8270	Hexachlorocyclopentadiene		ug/l	5	R	Surrogate Recovery	1
ME10010	G4MW-048(050611)	SW8270	3,5,5-Trimethyl-2-cyclohexene-1-one		ug/l	1	R	Surrogate Recovery	1
ME10010	G4MW-048(050611)	SW8270	Acenaphthene		ug/l	1	R	Surrogate Recovery	1
ME10010	G4MW-048(050611)	SW8270	Diethyl phthalate		ug/l	5	R	Surrogate Recovery	1
ME10010	G4MW-048(050611)	SW8270	Di-n-butyl phthalate		ug/l	5	R	Surrogate Recovery	1
ME10010	G4MW-048(050611)	SW8270	3-Nitroaniline		ug/l	2	R	Surrogate Recovery	1
ME10010	G4MW-048(050611)	SW8270	Benzyl Butyl Phthalate		ug/l	5	R	Surrogate Recovery	1
ME10010	G4MW-048(050611)	SW8270	Benzo(a)pyrene		ug/l	1	R	Surrogate Recovery	1

SDG	Sample ID	Method	Analyte	Result	Units	RDL	Qualifier	Reason	Dilution
ME10010	G4MW-048(050611)	SW8270	Fluorene		ug/l	1	R	Surrogate Recovery	1
ME10010	G4MW-048(050611)	SW8270	Carbazole		ug/l	1	R	Surrogate Recovery	1
ME10010	G4MW-048(050611)	SW8270	Hexachloro-1,3-Butadiene		ug/l	1	R	Surrogate Recovery	1
ME10010	G4MW-048(050611)	SW8270	2-Nitroaniline		ug/l	2	R	Surrogate Recovery	1
ME10010	G4MW-048(050611)	SW8270	2-Methyl naphthalene		ug/l	1	R	Surrogate Recovery	1
ME10010	G4MW-048(050611)	SW8270	3,3'-Dichlorobenzidine		ug/l	5	R	Surrogate Recovery	1
ME10010	G4MW-048(050611)	SW8270	Nitrobenzene		ug/l	1	R	Surrogate Recovery	1
ME10010	G4MW-048(050611)	SW8270	Phenanthrene		ug/l	1	R	Surrogate Recovery	1
ME10010	G4MW-048(050611)	SW8270	Dimethyl Phthalate		ug/l	5	R	Surrogate Recovery	1
ME10010	G4MW-048(050611)	SW8270	p-Nitroaniline		ug/l	2	R	Surrogate Recovery	1
ME10010	G4MW-048(050611)	SW8270	4-Bromophenyl Phenyl Ether		ug/l	1	R	Surrogate Recovery	1
ME10010	G4MW-048(050611)	SW8270	p-Chloroaniline		ug/l	1	R	Surrogate Recovery	1
ME10010	G4MW-048(050611)	SW8270	bis(2-chloroisopropyl) ether		ug/l	1	R	Surrogate Recovery	1
ME10010	G4MW-048(050611)	SW8270	bis(2-Chloroethoxy)methane		ug/l	1	R	Surrogate Recovery	1
ME10010	G4MW-048(050611)	SW8270	bis(2-Ethylhexyl)phthalate		ug/l	5	R	Surrogate Recovery	1

SDG	Sample ID	Method	Analyte	Result	Units	RDL	Qualifier	Reason	Dilution
ME10010	G4MW-048(050611)	SW8270	Di-n-octyl phthalate		ug/l	5	R	Surrogate Recovery	1
ME10010	G4MW-048(050611)	SW8270	Hexachlorobenzene		ug/l	1	R	Surrogate Recovery	1
ME10010	G4MW-048(050611)	SW8270	Anthracene		ug/l	1	R	Surrogate Recovery	1
ME10010	G4MW-048(050611)	SW8270	Benzo(a)anthracene		ug/l	1	R	Surrogate Recovery	1
ME10010	G4MW-048(050611)	SW8270	Pyrene		ug/l	1	R	Surrogate Recovery	1
ME10010	G4MW-048(050611)	SW8270	Dibenzo(a,h)anthracene		ug/l	1	R	Surrogate Recovery	1
ME10010	G4MW-048(050611)	SW8270	Dibenzofuran		ug/l	1	R	Surrogate Recovery	1
ME10010	G4MW-048(050611)	SW8270	Benzo(g,h,i)perylene		ug/l	1	R	Surrogate Recovery	1
ME10010	G4MW-048(050611)	SW8270	Indeno(1,2,3-cd)pyrene		ug/l	1	R	Surrogate Recovery	1
ME10010	G4MW-048(050611)	SW8270	Benzo(b)fluoranthene		ug/l	1	R	Surrogate Recovery	1
ME10010	G4MW-048(050611)	SW8270	Fluoranthene		ug/l	1	R	Surrogate Recovery	1
ME10010	G4MW-048(050611)	SW8270	Benzo(k)fluoranthene		ug/l	1	R	Surrogate Recovery	1
ME10010	G4MW-048(050611)	SW8270	Acenaphthylene		ug/l	1	R	Surrogate Recovery	1
ME10010	G4MW-048(050611)	SW8270	1,2-Benz-phenanthracene		ug/l	1	R	Surrogate Recovery	1
ME10010	G4MW-048(050611)	SW8270	2-Chloronaphthalene		ug/l	1	R	Surrogate Recovery	1

SDG	Sample ID	Method	Analyte	Result	Units	RDL	Qualifier	Reason	Dilution
ME10010	G4MW-048(050611)	SW8270	2,4-Dinitrotoluene		ug/l	2	R	Surrogate Recovery	1
ME10010	G4MW-048(050611)	SW8270	Naphthalene		ug/l	1	R	Surrogate Recovery	1
ME10010	G4MW-049(050411)	SW6010	Selenium	0.0047	mg/l	0	UB	Blank Contamination	1
ME10010	G4MW-049(050411)	SW6010	Selenium	0.0027	mg/l	0	UB	Blank Contamination	1
ME10010	G4MW-050(050611)	SW6010	Selenium	0.0065	mg/l	0	UB	Blank Contamination	1
ME10010	G4MW-050(050611)	SW6010	Selenium	0.0073	mg/l	0	UB	Blank Contamination	1
ME10010	G4MW-051(050611)	SW6010	Selenium	0.0042	mg/l	0	UB	Blank Contamination	1
ME10010	G4MW-051(050611)	SW6010	Selenium	0.0097	mg/l	0	UB	Blank Contamination	1
ME10010	G4MW-052(050611)	SW6010	Selenium	0.012	mg/l	0	UB	Blank Contamination	1
ME10010	G4MW-052(050611)	SW8270	Diethyl phthalate		ug/l	5.1	R	Surrogate Recovery	1
ME10010	G4MW-052(050611)	SW8270	Carbazole		ug/l	1	R	Surrogate Recovery	1
ME10010	G4MW-052(050611)	SW8270	Fluorene		ug/l	1	R	Surrogate Recovery	1
ME10010	G4MW-052(050611)	SW8270	N-Nitrosodiphenylamine		ug/l	1	R	Surrogate Recovery	1
ME10010	G4MW-052(050611)	SW8270	Benzyl Butyl Phthalate		ug/l	5.1	R	Surrogate Recovery	1
ME10010	G4MW-052(050611)	SW8270	Hexachloro-1,3-Butadiene		ug/l	1	R	Surrogate Recovery	1

SDG	Sample ID	Method	Analyte	Result	Units	RDL	Qualifier	Reason	Dilution
ME10010	G4MW-052(050611)	SW8270	Di-n-butyl phthalate		ug/l	5.1	R	Surrogate Recovery	1
ME10010	G4MW-052(050611)	SW8270	2-Nitroaniline		ug/l	2	R	Surrogate Recovery	1
ME10010	G4MW-052(050611)	SW8270	Acenaphthene		ug/l	1	R	Surrogate Recovery	1
ME10010	G4MW-052(050611)	SW8270	3,5,5-Trimethyl-2-cyclohexene-1-one		ug/l	1	R	Surrogate Recovery	1
ME10010	G4MW-052(050611)	SW8270	Hexachlorocyclopentadiene		ug/l	5.1	R	Surrogate Recovery	1
ME10010	G4MW-052(050611)	SW8270	4-Chlorophenyl Phenyl Ether		ug/l	1	R	Surrogate Recovery	1
ME10010	G4MW-052(050611)	SW8270	Phenanthrene		ug/l	1	R	Surrogate Recovery	1
ME10010	G4MW-052(050611)	SW8270	p-Nitroaniline		ug/l	2	R	Surrogate Recovery	1
ME10010	G4MW-052(050611)	SW8270	2,4,6-Trichlorophenol		ug/l	1	UJ	Holding Time	1
ME10010	G4MW-052(050611)	SW8270	2-Nitrophenol		ug/l	2	UJ	Holding Time	1
ME10010	G4MW-052(050611)	SW8270	Naphthalene		ug/l	1	R	Surrogate Recovery	1
ME10010	G4MW-052(050611)	SW8270	2-Methyl naphthalene		ug/l	1	R	Surrogate Recovery	1
ME10010	G4MW-052(050611)	SW8270	2-Chloronaphthalene		ug/l	1	R	Surrogate Recovery	1
ME10010	G4MW-052(050611)	SW8270	3,3'-Dichlorobenzidine		ug/l	5.1	R	Surrogate Recovery	1
ME10010	G4MW-052(050611)	SW8270	2-Methylphenol		ug/l	1	UJ	Holding Time	1

SDG	Sample ID	Method	Analyte	Result	Units	RDL	Qualifier	Reason	Dilution
ME10010	G4MW-052(050611)	SW8270	2-Chlorophenol		ug/l	1	UJ	Holding Time	1
ME10010	G4MW-052(050611)	SW8270	2,4,5-Trichlorophenol		ug/l	1	UJ	Holding Time	1
ME10010	G4MW-052(050611)	SW8270	Nitrobenzene		ug/l	1	R	Surrogate Recovery	1
ME10010	G4MW-052(050611)	SW8270	3-Nitroaniline		ug/l	2	R	Surrogate Recovery	1
ME10010	G4MW-052(050611)	SW8270	Hexachloroethane		ug/l	1	R	Surrogate Recovery	1
ME10010	G4MW-052(050611)	SW8270	N-Nitroso di-n-propylamine		ug/l	1	R	Surrogate Recovery	1
ME10010	G4MW-052(050611)	SW8270	Pentachlorophenol		ug/l	5.1	UJ	Holding Time	1
ME10010	G4MW-052(050611)	SW8270	Fluoranthene		ug/l	1	R	Surrogate Recovery	1
ME10010	G4MW-052(050611)	SW8270	2,6-Dinitroluene		ug/l	2	R	Surrogate Recovery	1
ME10010	G4MW-052(050611)	SW8270	Pyrene		ug/l	1	R	Surrogate Recovery	1
ME10010	G4MW-052(050611)	SW8270	Dimethyl Phthalate		ug/l	5.1	R	Surrogate Recovery	1
ME10010	G4MW-052(050611)	SW8270	Dibenzofuran		ug/l	1	R	Surrogate Recovery	1
ME10010	G4MW-052(050611)	SW8270	Benzo(g,h,i)perylene		ug/l	1	R	Surrogate Recovery	1
ME10010	G4MW-052(050611)	SW8270	2,4-Dichlorophenol		ug/l	1	UJ	Holding Time	1
ME10010	G4MW-052(050611)	SW8270	Benzo(b)fluoranthene		ug/l	1	R	Surrogate Recovery	1

SDG	Sample ID	Method	Analyte	Result	Units	RDL	Qualifier	Reason	Dilution
ME10010	G4MW-052(050611)	SW8270	Anthracene		ug/l	1	R	Surrogate Recovery	1
ME10010	G4MW-052(050611)	SW8270	Benzo(k)fluoranthene		ug/l	1	R	Surrogate Recovery	1
ME10010	G4MW-052(050611)	SW8270	Acenaphthylene		ug/l	1	R	Surrogate Recovery	1
ME10010	G4MW-052(050611)	SW8270	1,2-Benz-phenanthracene		ug/l	1	R	Surrogate Recovery	1
ME10010	G4MW-052(050611)	SW8270	Benzo(a)pyrene		ug/l	1	R	Surrogate Recovery	1
ME10010	G4MW-052(050611)	SW8270	2,4-Dinitrophenol		ug/l	5.1	UJ	Holding Time	1
ME10010	G4MW-052(050611)	SW8270	4,6-Dinitro-2-methylphenol		ug/l	5.1	UJ	Holding Time	1
ME10010	G4MW-052(050611)	SW8270	Indeno(1,2,3-cd)pyrene		ug/l	1	R	Surrogate Recovery	1
ME10010	G4MW-052(050611)	SW8270	p-Chloroaniline		ug/l	1	R	Surrogate Recovery	1
ME10010	G4MW-052(050611)	SW8270	Dibenzo(a,h)anthracene		ug/l	1	R	Surrogate Recovery	1
ME10010	G4MW-052(050611)	SW8270	Benzo(a)anthracene		ug/l	1	R	Surrogate Recovery	1
ME10010	G4MW-052(050611)	SW8270	4-Nitrophenol		ug/l	5.1	UJ	Holding Time	1
ME10010	G4MW-052(050611)	SW8270	4-Bromophenyl Phenyl Ether		ug/l	1	R	Surrogate Recovery	1
ME10010	G4MW-052(050611)	SW8270	2,4-Dinitrotoluene		ug/l	2	R	Surrogate Recovery	1
ME10010	G4MW-052(050611)	SW8270	m & p Cresol		ug/l	2	UJ	Holding Time	1

SDG	Sample ID	Method	Analyte	Result	Units	RDL	Qualifier	Reason	Dilution
ME10010	G4MW-052(050611)	SW8270	4-chloro-3-methylphenol		ug/l	1	UJ	Holding Time	1
ME10010	G4MW-052(050611)	SW8270	bis(2-chloroisopropyl) ether	0.34	ug/l	1	J	Holding Time	1
ME10010	G4MW-052(050611)	SW8270	Phenol		ug/l	1	UJ	Holding Time	1
ME10010	G4MW-052(050611)	SW8270	bis(2-Chloroethoxy)methane		ug/l	1	R	Surrogate Recovery	1
ME10010	G4MW-052(050611)	SW8270	bis(2-Ethylhexyl)phthalate		ug/l	5.1	R	Surrogate Recovery	1
ME10010	G4MW-052(050611)	SW8270	Di-n-octyl phthalate		ug/l	5.1	R	Surrogate Recovery	1
ME10010	G4MW-052(050611)	SW8270	Hexachlorobenzene		ug/l	1	R	Surrogate Recovery	1
ME10010	G4MW-052(050611)	SW8270	2,4-Dimethylphenol		ug/l	1	UJ	Holding Time	1
ME10010	G4MW-053(050611)	SW6010	Selenium	0.017	mg/l	0	UB	Blank Contamination	1
ME10010	G4MW-053(050611)	SW6010	Selenium	0.0073	mg/l	0	UB	Blank Contamination	1
ME10010	G4MW-053(050611)	SW8270	Diethyl phthalate		ug/l	5.2	R	Surrogate Recovery	1
ME10010	G4MW-053(050611)	SW8270	2,6-Dinitroluene		ug/l	2.1	R	Surrogate Recovery	1
ME10010	G4MW-053(050611)	SW8270	N-Nitroso di-n-propylamine		ug/l	1	R	Surrogate Recovery	1
ME10010	G4MW-053(050611)	SW8270	Hexachloroethane		ug/l	1	R	Surrogate Recovery	1
ME10010	G4MW-053(050611)	SW8270	4-Chlorophenyl Phenyl Ether		ug/l	1	R	Surrogate Recovery	1

SDG	Sample ID	Method	Analyte	Result	Units	RDL	Qualifier	Reason	Dilution
ME10010	G4MW-053(050611)	SW8270	Hexachlorocyclopentadiene		ug/l	5.2	R	Surrogate Recovery	1
ME10010	G4MW-053(050611)	SW8270	Carbazole		ug/l	1	R	Surrogate Recovery	1
ME10010	G4MW-053(050611)	SW8270	Acenaphthene		ug/l	1	R	Surrogate Recovery	1
ME10010	G4MW-053(050611)	SW8270	Dibenzo(a,h)anthracene		ug/l	1	R	Surrogate Recovery	1
ME10010	G4MW-053(050611)	SW8270	Di-n-butyl phthalate		ug/l	5.2	R	Surrogate Recovery	1
ME10010	G4MW-053(050611)	SW8270	Phenanthrene		ug/l	1	R	Surrogate Recovery	1
ME10010	G4MW-053(050611)	SW8270	Benzyl Butyl Phthalate		ug/l	5.2	R	Surrogate Recovery	1
ME10010	G4MW-053(050611)	SW8270	N-Nitrosodiphenylamine		ug/l	1	R	Surrogate Recovery	1
ME10010	G4MW-053(050611)	SW8270	p-Nitroaniline		ug/l	2.1	R	Surrogate Recovery	1
ME10010	G4MW-053(050611)	SW8270	3,5,5-Trimethyl-2-cyclohexene-1-one		ug/l	1	R	Surrogate Recovery	1
ME10010	G4MW-053(050611)	SW8270	Benzo(a)anthracene		ug/l	1	R	Surrogate Recovery	1
ME10010	G4MW-053(050611)	SW8270	Hexachloro-1,3-Butadiene		ug/l	1	R	Surrogate Recovery	1
ME10010	G4MW-053(050611)	SW8270	4,6-Dinitro-2-methylphenol		ug/l	5.2	UJ	Holding Time	1
ME10010	G4MW-053(050611)	SW8270	2,4-Dinitrophenol		ug/l	5.2	UJ	Holding Time	1
ME10010	G4MW-053(050611)	SW8270	Benzo(a)pyrene		ug/l	1	R	Surrogate Recovery	1

SDG	Sample ID	Method	Analyte	Result	Units	RDL	Qualifier	Reason	Dilution
ME10010	G4MW-053(050611)	SW8270	1,2-Benz-phenanthracene		ug/l	1	R	Surrogate Recovery	1
ME10010	G4MW-053(050611)	SW8270	Acenaphthylene		ug/l	1	R	Surrogate Recovery	1
ME10010	G4MW-053(050611)	SW8270	Benzo(k)fluoranthene		ug/l	1	R	Surrogate Recovery	1
ME10010	G4MW-053(050611)	SW8270	Fluoranthene		ug/l	1	R	Surrogate Recovery	1
ME10010	G4MW-053(050611)	SW8270	Benzo(b)fluoranthene		ug/l	1	R	Surrogate Recovery	1
ME10010	G4MW-053(050611)	SW8270	Indeno(1,2,3-cd)pyrene		ug/l	1	R	Surrogate Recovery	1
ME10010	G4MW-053(050611)	SW8270	4-Nitrophenol		ug/l	5.2	UJ	Holding Time	1
ME10010	G4MW-053(050611)	SW8270	Benzo(g,h,i)perylene		ug/l	1	R	Surrogate Recovery	1
ME10010	G4MW-053(050611)	SW8270	Dibenzofuran		ug/l	1	R	Surrogate Recovery	1
ME10010	G4MW-053(050611)	SW8270	4-chloro-3-methylphenol		ug/l	1	UJ	Holding Time	1
ME10010	G4MW-053(050611)	SW8270	3-Nitroaniline		ug/l	2.1	R	Surrogate Recovery	1
ME10010	G4MW-053(050611)	SW8270	p-Chloroaniline		ug/l	1	R	Surrogate Recovery	1
ME10010	G4MW-053(050611)	SW8270	bis(2-chloroisopropyl) ether	0.13	ug/l	1	J	Holding Time	1
ME10010	G4MW-053(050611)	SW8270	Phenol		ug/l	1	UJ	Holding Time	1
ME10010	G4MW-053(050611)	SW8270	bis(2-Chloroethoxy)methane		ug/l	1	R	Surrogate Recovery	1

SDG	Sample ID	Method	Analyte	Result	Units	RDL	Qualifier	Reason	Dilution
ME10010	G4MW-053(050611)	SW8270	bis(2-Ethylhexyl)phthalate		ug/l	5.2	R	Surrogate Recovery	1
ME10010	G4MW-053(050611)	SW8270	Di-n-octyl phthalate		ug/l	5.2	R	Surrogate Recovery	1
ME10010	G4MW-053(050611)	SW8270	Hexachlorobenzene		ug/l	1	R	Surrogate Recovery	1
ME10010	G4MW-053(050611)	SW8270	Anthracene		ug/l	1	R	Surrogate Recovery	1
ME10010	G4MW-053(050611)	SW8270	2,4-Dichlorophenol		ug/l	1	UJ	Holding Time	1
ME10010	G4MW-053(050611)	SW8270	2,4-Dinitrotoluene		ug/l	2.1	R	Surrogate Recovery	1
ME10010	G4MW-053(050611)	SW8270	Pyrene		ug/l	1	R	Surrogate Recovery	1
ME10010	G4MW-053(050611)	SW8270	Fluorene		ug/l	1	R	Surrogate Recovery	1
ME10010	G4MW-053(050611)	SW8270	m & p Cresol		ug/l	2.1	UJ	Holding Time	1
ME10010	G4MW-053(050611)	SW8270	4-Bromophenyl Phenyl Ether		ug/l	1	R	Surrogate Recovery	1
ME10010	G4MW-053(050611)	SW8270	Dimethyl Phthalate		ug/l	5.2	R	Surrogate Recovery	1
ME10010	G4MW-053(050611)	SW8270	Nitrobenzene		ug/l	1	R	Surrogate Recovery	1
ME10010	G4MW-053(050611)	SW8270	2,4,5-Trichlorophenol		ug/l	1	UJ	Holding Time	1
ME10010	G4MW-053(050611)	SW8270	2-Chlorophenol		ug/l	1	UJ	Holding Time	1
ME10010	G4MW-053(050611)	SW8270	2-Methylphenol		ug/l	1	UJ	Holding Time	1

SDG	Sample ID	Method	Analyte	Result	Units	RDL	Qualifier	Reason	Dilution
ME10010	G4MW-053(050611)	SW8270	3,3'-Dichlorobenzidine		ug/l	5.2	R	Surrogate Recovery	1
ME10010	G4MW-053(050611)	SW8270	2-Chloronaphthalene		ug/l	1	R	Surrogate Recovery	1
ME10010	G4MW-053(050611)	SW8270	2-Methyl naphthalene		ug/l	1	R	Surrogate Recovery	1
ME10010	G4MW-053(050611)	SW8270	Naphthalene		ug/l	1	R	Surrogate Recovery	1
ME10010	G4MW-053(050611)	SW8270	2-Nitrophenol		ug/l	2.1	UJ	Holding Time	1
ME10010	G4MW-053(050611)	SW8270	2-Nitroaniline		ug/l	2.1	R	Surrogate Recovery	1
ME10010	G4MW-053(050611)	SW8270	2,4,6-Trichlorophenol		ug/l	1	UJ	Holding Time	1
ME10010	G4MW-053(050611)	SW8270	Pentachlorophenol		ug/l	5.2	UJ	Holding Time	1
ME10010	G4MW-053(050611)	SW8270	2,4-Dimethylphenol		ug/l	1	UJ	Holding Time	1
ME10010	G4MW-054(050611)	SW6010	Selenium	0.0043	mg/l	0	UB	Blank Contamination	1
ME10010	G4MW-054(050611)	SW6010	Selenium	0.017	mg/l	0	UB	Blank Contamination	1

HUNTER STEWART
ELECTRONIC VALIDATION REVIEW REPORT
SDG: MG16005
FST-39

Analytical data were evaluated in accordance with applicable USEPA SW-846 method requirements, "USEPA Contract Laboratory Program National Functional Guidelines for Organic Data Review" (October 1999), analytical method control criteria, the analytical laboratory Quality Assurance Control Limits, the Fort Stewart Military Reservation and Hunter Army Airfield Quality Assurance Project Plan (ARCADIS-2008), and professional judgment.

The data review summarized in this report includes a review of all sample collection documentation and the electronic data validation of the analytical data housed in the project database. Sample collection documentation included sample collection logs and chains of custody. The electronic data validation was performed utilizing the EQuIS Data Qualification Module (DQM). DQM checks for the following parameters:

- Holding times and preservation;
- Blank contamination;
    1. Method blanks,
    2. Trip blanks,
    3. Equipment blanks;
- Matrix spike and Duplicate sample recovery;
- Matrix Spike and Matrix Spike Duplicate relative percent differences;
- Laboratory Control Sample and Duplicate recovery;
- Laboratory Control Sample and Duplicate relative percent differences;
- Surrogate recovery (organic analyses only); and
- Field duplicate relative percent difference.

Manual review was performed for the following items:

- Sample dilutions and reporting limits;
- Case Narratives; and
- Laboratory Duplicates

Data was generated by Shealy Environmental Services, Inc. – West Columbia, South Carolina. Data qualifiers were applied electronically to the database with any additional qualifiers added manually. A summary of the data as amended by data qualifiers is included with the original hard copy reports.

The attached table summarizes the data that were qualified due to QC deficiencies. The table indicates compounds/analytes qualified based on electronic and manual validation. Refer to the associated method section of the validation checklist for a detailed explanation of qualification. All other data in these SDGs are considered usable as reported.

HUNTER STEWART
ELECTRONIC VALIDATION REVIEW REPORT
SDG: MG16005
FST-39

The following list of data qualifiers and definitions were applied in accordance with qualification criteria defined in the greater than guidance documents:

UB Compound/analyte detected in blank or associated blank, qualified as a non-detect at listed value.

J The analyte was positively identified, but the associated numerical value is the approximate concentration of the analyte in the sample.

UJ The analyte was not detected greater than the reporting limit; however, the reported quantitation limit is approximate and may, or may not represent the actual limit of quantitation necessary to accurately and precisely measure analyte in the sample.

R The sample result is rejected due to serious deficiencies in the ability to analyze the sample and meet quality control criteria; and the presence or absence of the analyte cannot be verified.

U Not detected at the quantitative reporting limit

DQM RUN BY:	Rachelle Borne	10/31/11
REVIEW PERFORMED BY:	Rachelle Borne	10/31/11
SIGNATURE:	Rachelle Borne	10/31/11
PEER REVIEW:	Todd Church	11/3/11

HUNTER STEWART
ELECTRONIC VALIDATION REVIEW REPORT
SDG: MG16005
FST-39

The following samples were included in this validation:

SDG	Sample ID	Sample Date	Parent Sample
MG16005	G4MW-052	07/12/11	
MG16005	Trip Blank	07/12/11	

HUNTER STEWART
ELECTRONIC VALIDATION REVIEW REPORT
SDG: MG16005
FST-39

ANALYTICAL DATA PACKAGE DOCUMENTATION

GENERAL INFORMATION

Items Reviewed	Reported		Performance Acceptable		Not Required
	No	Yes	No	Yes	
1. Sample results		X		X	
2. Parameters analyzed		X		X	
3. Methods of analysis		X		X	
4. Reporting limits of analysis		X		X	
5. Master tracking list		X		X	
6. Sample collection date		X		X	
7. Laboratory sample received date		X		X	
8. Sample preparation/extraction date		X		X	
9. Sample analysis date		X		X	
10. Copy of chain-of-custody form signed by lab sample custodian		X		X	
11. Narrative summary of QA or sample problems provided		X		X	
12. Laboratory Signature		X		X	
13. South Carolina Certification Number		X		X	

QA - quality assurance

The analytical report was complete with the following exceptions or notations.

Note: The laboratory reported values between the quantitative reporting limit and the method detection limit as estimated concentrations. The "J" qualifier was retained in this validation. Non-detect values are reported at the quantitative reporting limit.

HUNTER STEWART
ELECTRONIC VALIDATION REVIEW REPORT
SDG: MG16005
FST-39

VOLATILE ORGANIC COMPOUNDS

Items Reviewed	DQM Deficiency		Qualification Applied	
	No	Yes	No	Yes
1. Holding times/Preservation	DQM		DQM	
2. Reporting limits	M		M	
3. Blanks				
A. Method blanks	DQM		DQM	
B. Equipment blanks	NA		NA	
C. Trip blanks		DQM	DQM	
4. Surrogate spike recoveries	DQM		DQM	
5. Laboratory control sample (LCS) A. LCS %R	DQM		DQM	
B. LCS duplicate (LCSD) %R	DQM		DQM	
C. LCS/LCSD RPD	DQM		DQM	
6. Matrix spike (MS)				
A. MS %R	NA		NA	
B. MS duplicate (MSD) %R	NA		NA	
C. MS/MSD precision (RPD)	NA		NA	
7. Field Duplicate precision (RPD)	NA		NA	

M – Manual Review %R - percent recovery RPD - relative percent difference
DQM – Data Qualification Module

Comments:
This section presents a discussion of any additions or changes to the electronic data validation for compounds analyzed by Method 8260B.

3C. The compound toluene was detected in the trip blank. The associated field samples were non-detect for this compound; therefore, qualification of the data was not warranted.

HUNTER STEWART
ELECTRONIC VALIDATION REVIEW REPORT
SDGs: LC13017, LC17068, LC20005, LD01022, LD09009, LD09018 and LD14020
FST-39

Analytical data were evaluated in accordance with applicable USEPA SW-846 method requirements, "USEPA Contract Laboratory Program National Functional Guidelines for Organic Data Review" (October 1999), analytical method control criteria, the analytical laboratory Quality Assurance Control Limits, the Fort Stewart Military Reservation and Hunter Army Airfield Quality Assurance Project Plan (ARCADIS-2008), and professional judgment.

The data review summarized in this report includes a review of all sample collection documentation and the electronic data validation of the analytical data housed in the project database. Sample collection documentation included sample collection logs and chains of custody. The electronic data validation was performed utilizing the EQuIS Data Qualification Module (DQM). DQM checks for the following parameters:

- Holding times and preservation;
- Blank contamination;
    1. Method blanks,
    2. Trip blanks,
    3. Equipment blanks;
- Matrix spike and Duplicate sample recovery;
- Matrix Spike and Matrix Spike Duplicate relative percent differences;
- Laboratory Control Sample and Duplicate recovery;
- Laboratory Control Sample and Duplicate relative percent differences;
- Surrogate recovery (organic analyses only); and
- Field duplicate relative percent difference.

Manual review was performed for the following items:

- Sample dilutions and reporting limits;
- Case Narratives; and
- Laboratory Duplicates

Data was generated by Shealy Environmental Services, Inc. – West Columbia, South Carolina and Test America – Savannah Laboratories. Data qualifiers were applied electronically to the database with any additional qualifiers added manually. A summary of the data as amended by data qualifiers is included with the original hard copy reports.

The attached table summarizes the data that were qualified due to QC deficiencies. The table indicates compounds/analytes qualified based on electronic and manual validation. Refer to the associated method section of the validation checklist for a detailed explanation of qualification. All other data in these SDGs are considered usable as reported.

HUNTER STEWART
ELECTRONIC VALIDATION REVIEW REPORT
SDGs: LC13017, LC17068, LC20005, LD01022, LD09009, LD09018 and LD14020
FST-39

The following list of data qualifiers and definitions were applied in accordance with qualification criteria defined in the greater than guidance documents:

UB Compound/analyte detected in blank or associated blank, qualified as a non-detect at listed value.

J The analyte was positively identified, but the associated numerical value is the approximate concentration of the analyte in the sample.

UJ The analyte was not detected greater than the reporting limit; however, the reported quantitation limit is approximate and may, or may not represent the actual limit of quantitation necessary to accurately and precisely measure analyte in the sample.

R The sample result is rejected due to serious deficiencies in the ability to analyze the sample and meet quality control criteria; and the presence or absence of the analyte cannot be verified.

U Not detected at the quantitative reporting limit

DQM RUN BY:	Rachelle Borne	06/15/10
REVIEW PERFORMED BY:	Rachelle Borne	06/15/10
SIGNATURE:	Rachelle Borne	06/16/10
PEER REVIEW:	Dennis Capria	06/21/10

HUNTER STEWART
ELECTRONIC VALIDATION REVIEW REPORT
SDGs: LC13017, LC17068, LC20005, LD01022, LD09009, LD09018 and LD14020
FST-39

The following samples were included in this SDG:

SDG	Sample ID	Sample Date	Parent Sample
LC13017	DUP-5 (031110)	3/11/2010	G4MW027 (031110)
LC13017	G4MW006 (031210)	3/12/2010	
LC13017	G4MW010 (031210)	3/12/2010	
LC13017	G4MW011 (031110)	3/11/2010	
LC13017	G4MW016 (031010)	3/10/2010	
LC13017	G4MW017 (031010)	3/10/2010	
LC13017	G4MW018 (031210)	3/12/2010	
LC13017	G4MW019 (031010)	3/10/2010	
LC13017	G4MW020 (031010)	3/10/2010	
LC13017	G4MW023 (031010)	3/10/2010	
LC13017	G4MW024 (031010)	3/10/2010	
LC13017	G4MW025 (031010)	3/10/2010	
LC13017	G4MW027 (031110)	3/11/2010	
LC13017	G4MW028 (031110)	3/11/2010	
LC13017	G4MW029 (031110)	3/11/2010	
LC13017	G4MW031 (031010)	3/10/2010	
LC13017	TRIP BLANK (031010)	3/12/2010	
LC17068	DUP-2 (031810)	3/18/2010	F39SB008 (4-5)
LC17068	F39SB001 (4.5-5.5)	3/15/2010	
LC17068	F39SB002 (4-5)	3/18/2010	
LC17068	F39SB003 (4-5)	3/15/2010	
LC17068	F39SB004 (4-5)	3/15/2010	
LC17068	F39SB005 (4-5)	3/15/2010	
LC17068	F39SB006 (4-5)	3/15/2010	
LC17068	F39SB007 (4-5)	3/15/2010	
LC17068	F39SB008 (4-5)	3/18/2010	
LC17068	F39SB009 (0.5-1)	3/15/2010	
LC17068	F39SB009 (3.0-3.5)	3/15/2010	
LC17068	F39SB010 (0.5-1.0)	3/16/2010	
LC17068	F39SB010 (3.0-3.5)	3/16/2010	
LC17068	F39SB011 (0.5-1.0)	3/16/2010	
LC17068	F39SB011 (3.0-3.5)	3/16/2010	
LC17068	F39SB012 (0.5-1.0)	3/16/2010	
LC17068	F39SB012 (3.0-3.5)	3/16/2010	
LC17068	TRIP BLANK (031610)	3/17/2010	
LC20005	Trip Blank (031810)	3/20/2010	
LC20005	F39TW01 (40-45)	3/18/2010	
LD01022	DUP-3 (033010)	3/30/2010	F39TW02 (20-25)
LD01022	F39TW01 (10-15)	3/31/2010	
LD01022	F39TW01 (20-25)	3/30/2010	
LD01022	F39TW01 (30-35)	3/30/2010	
LD01022	F39TW02 (10-15)	3/30/2010	

HUNTER STEWART
ELECTRONIC VALIDATION REVIEW REPORT
SDGs: LC13017, LC17068, LC20005, LD01022, LD09009, LD09018 and LD14020
FST-39

SDG	Sample ID	Sample Date	Parent Sample
LD01022	F39TW02 (20-25)	3/30/2010	
LD01022	F39TW02 (30-35)	3/30/2010	
LD01022	F39TW02 (40-45)	3/30/2010	
LD01022	F39TW03 (10-15)	3/31/2010	
LD01022	F39TW03 (20-25)	3/31/2010	
LD01022	F39TW03 (30-35)	3/31/2010	
LD01022	F39TW03 (40-45)	3/31/2010	
LD01022	F39TW04 (10-15)	4/1/2010	
LD01022	F39TW04 (20-25)	4/1/2010	
LD01022	F39TW04 (30-35)	4/1/2010	
LD01022	F39TW04 (40-45)	4/1/2010	
LD01022	TRIP BLANK (033110)	4/1/2010	
LD01022	Trip Blank (040110)	4/6/2010	
LD09009	G4MW033 (040710)	4/7/2010	
LD09009	G4MW034 (040610)	4/6/2010	
LD09009	G4MW035 (040610)	4/6/2010	
LD09009	G4MW036 (040610)	4/6/2010	
LD09009	Trip Blank (040810)	4/8/2010	
LD09018	F39SED08 (040810)	4/8/2010	
LD09018	F39SW-01 (040810)	4/8/2010	
LD09018	F39SW-02 (040810)	4/8/2010	
LD09018	F39SW-03 (040810)	4/8/2010	
LD09018	F39SW-04 (040810)	4/8/2010	
LD09018	F39SW-05 (040810)	4/8/2010	
LD09018	F39SW-06 (040810)	4/8/2010	
LD09018	F39SW-07 (040810)	4/8/2010	
LD09018	F39TW05 (10-15)	4/5/2010	
LD09018	F39TW05 (20-25)	4/6/2010	
LD09018	F39TW05 (30-35)	4/6/2010	
LD09018	F39TW05 (40-45)	4/5/2010	
LD09018	F39TW06 (10-15)	4/6/2010	
LD09018	F39TW06 (20-25)	4/7/2010	
LD09018	F39TW06 (30-35)	4/7/2010	
LD09018	F39TW06 (40-45)	4/6/2010	
LD09018	F39TW07 (10-15)	4/7/2010	
LD09018	F39TW07 (20-25)	4/8/2010	
LD09018	F39TW07 (30-35)	4/8/2010	
LD09018	F39TW07 (40-45)	4/7/2010	
LD09018	F39TW08 (10-15)	4/8/2010	
LD09018	F39TW08 (20-25)	4/8/2010	
LD09018	F39TW08 (30-35)	4/8/2010	
LD09018	F39TW08 (40-45)	4/8/2010	
LD09018	TRIP BLANK (040910)	4/9/2010	

HUNTER STEWART
ELECTRONIC VALIDATION REVIEW REPORT
SDGs: LC13017, LC17068, LC20005, LD01022, LD09009, LD09018 and LD14020
FST-39

SDG	Sample ID	Sample Date	Parent Sample
LD09018	DUP01 (040810)	4/8/2010	F39SW-01 (040810)
LD09018	DUP-4 (040710)	4/7/2010	F39TW06 (30-35)
LD09018	F39SED01 (040810)	4/8/2010	
LD09018	F39SED02 (040810)	4/8/2010	
LD09018	F39SED03 (040810)	4/8/2010	
LD09018	F39SED04 (040810)	4/8/2010	
LD09018	F39SED05 (040810)	4/8/2010	
LD09018	F39SED06 (040810)	4/8/2010	
LD09018	F39SED07 (040810)	4/8/2010	
LD14020	F39TW09 (10-15)	4/12/2010	
LD14020	F39TW09 (20-25)	4/12/2010	
LD14020	F39TW09 (30-35)	4/12/2010	
LD14020	F39TW09 (40-45)	4/12/2010	
LD14020	F39TW10 (10-15)	4/13/2010	
LD14020	F39TW10 (20-25)	4/13/2010	
LD14020	F39TW10 (30-35)	4/13/2010	
LD14020	F39TW10 (40-45)	4/13/2010	
LD14020	F39TW11 (10-15)	4/14/2010	
LD14020	F39TW11 (20-25)	4/14/2010	
LD14020	F39TW11 (30-35)	4/14/2010	
LD14020	F39TW11 (40-45)	4/14/2010	
LD14020	F39TW12 (10-15)	4/14/2010	
LD14020	F39TW12 (20-25)	4/14/2010	
LD14020	F39TW12 (30-35)	4/14/2010	
LD14020	F39TW12 (40-45)	4/14/2010	
LD14020	Trip Blank (041410)	4/14/2010	

HUNTER STEWART
ELECTRONIC VALIDATION REVIEW REPORT
SDGs: LC13017, LC17068, LC20005, LD01022, LD09009, LD09018 and LD14020
FST-39

ANALYTICAL DATA PACKAGE DOCUMENTATION

GENERAL INFORMATION

Items Reviewed	Reported		Performance Acceptable		Not Required
	No	Yes	No	Yes	
1. Sample results		X		X	
2. Parameters analyzed		X		X	
3. Methods of analysis		X		X	
4. Reporting limits of analysis		X		X	
5. Master tracking list		X		X	
6. Sample collection date		X		X	
7. Laboratory sample received date		X		X	
8. Sample preparation/extraction date		X		X	
9. Sample analysis date		X		X	
10. Copy of chain-of-custody form signed by lab sample custodian		X		X	
11. Narrative summary of QA or sample problems provided		X		X	
12. Laboratory Signature		X		X	
13. South Carolina Certification Number		X		X	

QA - quality assurance

The analytical report was complete with the following exceptions or notations.

Note: The laboratory reported values between the quantitative reporting limit and the method detection limit as estimated concentrations. The "J" qualifier was retained in this validation. Non-detect values are reported at the quantitative reporting limit.

VOLATILE ORGANIC COMPOUNDS

Items Reviewed	DQM Deficiency		Qualification Applied	
	No	Yes	No	Yes
1. Holding times/Preservation	DQM		DQM	
2. Reporting limits	M		M	
3. Blanks				
A. Method blanks		DQM		DQM
B. Equipment blanks	NA		NA	
C. Trip blanks		DQM		DQM
4. Surrogate spike recoveries	DQM		DQM	
5. Laboratory control sample (LCS) A. LCS %R		DQM		DQM
B. LCS duplicate (LCSD) %R		DQM		DQM
C. LCS/LCSD RPD		DQM		DQM
6. Matrix spike (MS)				
A. MS %R		DQM		DQM
B. MS duplicate (MSD) %R		DQM		DQM
C. MS/MSD precision (RPD)		DQM		DQM
7. Field Duplicate precision (RPD)		DQM		DQM

M – Manual Review %R - percent recovery RPD - relative percent difference DQM – Data Qualification Module

Comments:
This section presents a discussion of any additions or changes to the electronic data validation for compounds analyzed by Method 8260B.

2. SDG (LD09018) Several samples required dilutions due to elevated concentrations of target analytes. There were elevated reporting limits for non-detect results.

3A. SDG (LC17068) The compound carbon disulfide was detected in the method blank for batch 3000. The associated field samples were non-detect for this compound; therefore, qualification of the data is not warranted.

SDG (LC20005) The compound carbon disulfide was detected in the method blank. The associated field samples were qualified as non-detect for carbon disulfide if the sample concentration was less than five times the blank value.

SDG (LD01022) The compound methylene chloride was detected in the method blank for batches 30893, 30899 and 31061. The associated field samples were qualified as non-detect for this compound if the sample concentration was less than ten times the blank result.

SDG (LD09009) The compound methylene chloride was detected in the method blank. The associated field samples were qualified as non-detect for this compound if the sample concentration was less than ten times the blank result.

SDG (LD09018) The compound methylene chloride was detected in the method blank for batches 31466 and 31526. The associated field samples were qualified as non-detect for this compound if the sample concentration was less than ten times the blank result.

SDG (LD09018) The compound 2-hexanone was detected in the method blank for batch 31760. The associated field samples were non-detect for this compound; therefore, qualification of the data is not warranted.

SDG (LD14020) The compound methylene chloride was detected in the method blank for batch 31703. The associated field samples were qualified as non-detect for this compound if the sample concentration was less than ten times the blank result.

SDG (LD14020) The compound acetone was detected in the method blank for batch 31987. The associated field samples were qualified as non-detect for this compound if the sample concentration was less than ten times the blank result.

3C. SDGs (LC17068 and LC13017) The compound acetone was detected in the trip blank. The associated field samples were qualified as non-detect for acetone if the sample concentration was less than ten times the blank value.

SDG (LC20005) The compounds acetone and carbon disulfide were detected in the trip blank. The associated field sample was qualified as non-detect for these compounds if the sample concentration was less than five times the blank value for carbon disulfide and less than ten times the blank value for acetone.

SDG (LD01022) The compounds acetone and carbon disulfide were detected in Trip Blank (033110). The associated field sample was qualified as non-detect for these compounds if the sample concentration was less than five times the blank value for carbon disulfide and less than ten times the blank value for acetone.

SDG (LD01022) The compound methylene chloride was detected in Trip Blank(040110). The associated field sample were qualified as non-detect for this compound if the sample concentration was less than ten times the blank result.

SDG (LD09009) The compounds acetone and methylene chloride were detected in the trip blank. The associated field samples were qualified as non-detect for these compounds if the sample result was less than ten times the blank result.

SDG (LD09018) The compounds acetone and methylene chloride were detected in the trip blanks. The associated field samples were qualified as non-detect for these compounds if the sample result was less than ten times the blank result.

SDG (LD14020) The compounds acetone, methylene chloride, carbon disulfide and vinyl chloride were detected in one or more of the trip blanks. The associated field samples were qualified as non-detect for these compounds if the sample result was less than ten times the blank result for methylene chloride and acetone and less than five times the blank result for carbon disulfide and vinyl chloride.

5. SDG (LC17068) The RPDs between the LCS/LCSD pair were above the control limit for several compounds for batch 29863. The associated field samples were qualified as estimated for these compounds. See the attached qualification summary for details of the qualifications.

SDG (LC17068) The recovery of the compound bromoform was below the control limit in the LCS for batch 29887. The associated field samples were qualified as estimated for bromoform.

SDG (LC17068) The recovery of chloroethane was above the control limit in the LCSD for batch 29942. The associated field samples were non-detect for this compound; therefore, qualification of the data is not warranted. The RPDs between the LCS/LCSD pair were above the control limit for the compounds acetone and chloroethane. The associated field samples were qualified as estimated for these compounds.

SDG (LC17068) The RPD between the LCS/LCDS pair was above the control limit for the compound trichlorofluoromethane. The associated field samples were qualified as estimated for this compound.

SDG (LC17068) The recoveries of the compounds acetone, methyl acetate and 4-methyl-2-pentanone were above the control limit in the LCSD for batch 30086. All detections of these compounds in the associated field samples were qualified as estimated. The RPDs between the LCS/LCSD pair were above the control limit for acetone, 2-butanone, 2-hexanone, methyl acetate and 4-methyl-2-pentanone. The associated field samples were qualified as estimated for these compounds.

SDG (LC17068) The recovery of the compounds acetone, carbon disulfide, methyl acetate and methyl tertiary butyl ether were above the control limit in the LCS and/or the LCSD for batch 30124. All detections of these compounds in the associated field samples were qualified as estimated. The RPDs between the LCS/LCSD pair were above the control limit for acetone and chloroethane. The associated field samples were qualified as estimated for these compounds.

SDG (LC20005) The RPDs between the LCS/LCSD pair were above the control limit trichlorofluoromethane. The associated field samples were qualified as estimated for this compound.

SDG (LD01022) The recovery of the compound 1,2,4-trichlorobenzene was above the control limit in the LCSD for batch 30893. The associated field samples were non-detect for this compound; therefore, qualification of the data is not warranted.

SDG (LD01022) The recovery of the compound 1,2-dibromo-3-chloropropane was below the control limit in the LCSD for batch 30897. The associated field samples were qualified as estimated for this compound.

SDG (LD01022) The RPD between the LCS/LCSD pair was above the control limit for bromomethane. The associated field samples were qualified as estimated for this compound.

SDG (LD09018) The RPD between the LCS/LCSD pair was above the control limit for bromomethane. The associated field samples were qualified as estimated for this compound.

6. SDG (LD01022) Sample location F39TW01(20-25) was used as the MS/MSD. Several recoveries were outside the control limit in the MS and the MSD. Several RPDs were greater than the control limit. The parent sample was qualified as estimated for these compounds. See the attached qualification summary for details of the qualifications.

   SDG (LD14020) Sample location F39TW09(30-35) was used as the MS/MSD. Several recoveries were outside the control limit in the MS and the MSD. Several RPDs were greater than the control limit. The parent sample was qualified as estimated for these compounds. See the attached qualification summary for details of the qualifications.

7. SDG (LC13017) Sample location DUP-5(031110) was collected as a field duplicate of G4MW027(031110). The RPDs were acceptable at less than 40%.

SDG (LC17068) Sample location DUP-2(031810) was collected as a field duplicate of F39SB008(4-5). The RPDs were acceptable at less than 40%.

SDG (LD01022) Sample location DUP-3(033010) was collected as a field duplicate of F39TW02(20-25). The RPDs were acceptable at less than 40%.

SDG (LD09018) Sample location DUP-4(040710) was collected as a field duplicate of F39TW06(30-35). The RPDs were acceptable at less than 40%.

SDG (LD09018) Sample location DUP01(040810) was collected as a field duplicate of F39SW-01(040810). The RPD for trichloroethene was above the 40% control limit. The parent and the duplicate were qualified as estimated for this compound.

HUNTER STEWART
ELECTRONIC VALIDATION REVIEW REPORT
SDGs: LC13017, LC17068, LC20005, LD01022, LD09009, LD09018 and LD14020
FST-39

SEMIVOLATILE ORGANIC COMPOUNDS

Items Reviewed	DQM Deficiency		Qualification Applied	
	No	Yes	No	Yes
1. Holding times/Preservation		DQM		DQM
2. Reporting limits	M		M	
3. Blanks				
A. Method blanks	DQM		DQM	
B. Equipment blanks	NA		NA	
4. Surrogate spike recoveries		DQM		DQM
5. Laboratory control sample (LCS) A. LCS %R		DQM		DQM
B. LCS duplicate (LCSD) %R	DQM		DQM	
C. LCS/LCSD RPD	DQM		DQM	
6. Matrix spike (MS)				
A. MS %R		DQM		DQM
B. MS duplicate (MSD) %R		DQM		DQM
C. MS/MSD precision (RPD)		DQM		DQM
7. Field Duplicate precision (RPD)	DQM		DQM	

M – Manual Review %R - percent recovery RPD - relative percent difference DQM – Data Qualification Module

Comments:
This section presents a discussion of any additions or changes to the electronic data validation for compounds analyzed by Method 8270D.

1. SDG (LD14020) Sample location F39TW10(40-45) was extracted 6 days beyond the recommended seven day holding time. Sample locations F39TW11(40-45) and F39TW12(40-45) were analyzed five days beyond the recommened seven day holding time. All SVOC results for these samples were qualified as estimated.

2. SDG (LC17068) Several samples were analyzed at 2x dilutions due to the viscosity of the sample. There were elevated reporting limits for non-detect results.

4. SDG (LD01022) One surrogate recovery was below the control limit in F39TW02(40-45). Only one surrogate recovery was outside the control limit. No qualification is necessary.

   SDG (LD01022) One base-neutral surrogate recovery was less than 10% in F39TW03(40-45). The sample was re-analyzed outside the 7 day holding time with similar results. The initial analysis will be used for reporting purposes for the acid compounds. The re-analysis will be used for the base-neutral compounds. All base-neutral compounds for this sample were qualified as rejected.

   SDG (LD09018) Two base-neutral surrogate recoveries were less than ten percent in the initial analysis of F39TW06(40-45). The sample was re-extracted 5 days beyond the 7 day recommended holding time. The surrogate recoveries were acceptable in the re-analysis. The initial analysis will be used for reporting the acid compounds. The re-analysis will be used for reporting purposes for the base neutral compounds. All base neutral compounds were qualified as estimated.

   SDG (LD09018) Two base neutral surrogate exhibited recoveries less than ten percent in the initial analysis of F39TW08(30-35). The sample was re-extracted 3 days beyond the 7 day recommended

holding time. The surrogate recoveries were acceptable in the re-analysis. The acid compounds will be reported with no qualification from the original analyses since the acid surrogates exhibited acceptable recoveries. The base-neutral compounds will be reported from the re-analysis and all base-neutral compounds were qualified as estimated.

SDG (LD09018) One base-neutral surrogate exhibited a recovery less than ten percent in the initial and re-analysis for sample F39TW08(40-45). The re-analysis will be used for reporting purposes and all base-neutral compounds will be qualified as rejected.

SDG (LD14020) One base-neutral surrogate recovery was less than ten percent in sample locations F39TW09(30-35) and F39TW12(40-45). All base neutral compounds for this sample were qualified as rejected.

SDG (LD14020) One surrogate recovery was below the control limit in F39TW10(40-45). Only one surrogate was outside the control limit; therefore, no qualification is necessary.

5. SDG (LC20005) The recovery of the compound 4-chloroaniline was below the control limit in the LCS. The RPD between the LCS/LCSD pair was greater than the control limit for 4-chloroaniline. The associated field samples were qualified as estimated for this compound.

   SDG (LD01022) The recovery of carbazole was above the control limit in the LCS for batch 30843. The associated field samples were non-detect for this compound; therefore, qualification of the data was not warranted.

   SDG (LD09018) The recoveries of several compounds were less than the control limit in the LCS for batch 30326. The associated field samples were qualified as estimated for these compounds. Please see the attached qualification summary for details of the qualifications.

6. SDG (LC17068) Sample location F39SB001(4.5-5.5) was used as the MS/MSD. The RPDs between the MS/MSD pair were greater than the control limit for bis(2-chloroethyl)ether, bis(2-chloroisopropyl)ether, 2-chlorophenol, 2-methylphenol and nitrobenzene. The parent sample was qualified as estimated for these compounds.

   SDG (LD01022) Sample location F39TW01(20-25) was used as the MS/MSD. Several recoveries were outside the control limit in the MS and the MSD. The parent sample was qualified as estimated for these compounds when applicable. The recovery of benzo(g,h,i)perylene was less than ten percent in the MS. The parent sample was qualified as rejected for this compound. See the attached qualification summary for details of the qualifications.

   SDG (LD09009) Sample location G4MW034(040610) was used as the MS/MSD. Several recoveries were outside the control limit in the MS and the MSD. The parent sample was qualified as estimated for these compounds when applicable. The recoveries of 4-chloroaniline, 3-nitroaniline and 4-nitroaniline were less than ten percent in the MSD. The parent sample was qualified as rejected for these compounds. The RPDs between the MS/MSD pair were greater than the control limit for several compounds. The parent sample was qualified as estimated for these compounds. See the attached qualification summary for details of the qualifications.

   SDG (LD09018) Sample location F39SW-01(040810) was used as the MS/MSD. Several recoveries were outside the control limit in the MS and the MSD. The parent sample was qualified as estimated for these compounds when applicable. The recoveries of 4-chloroaniline and 3-nitroaniline were less than ten percent in the MS. The parent sample was qualified as rejected for these compounds. The RPDs

between the MS/MSD pair were greater than the control limit for several compounds. The parent sample was qualified as estimated for these compounds. See the attached qualification summary for details of the qualifications.

SDG (LD09018) Sample location F39SED01(040810) was used as the MS/MSD. Several recoveries and RPDs were outside the control limit. The parent sample was qualified as estimated for these compounds. See the attached qualification summary for details of the qualifications.

SDG (LD14020) Sample location F39TW09(30-35) was used as the MS/MSD. Several recoveries were outside the control limit in the MS and the MSD. Several RPDs were greater than the control limit. The parent sample was qualified as estimated for these compounds. See the attached qualification summary for details of the qualifications.

SDG (LD14020) Sample location F39TW11(20-25) was used as the MS/MSD. Several recoveries were outside the control limit in the MS and the MSD. Several RPDs were greater than the control limit. The parent sample was qualified as estimated for these compounds. See the attached qualification summary for details of the qualifications. The recoveries of 4-chloroaniline, bis(2-ethylhexyl)phthalate, 3-nitroaniline, 4-nitroaniline and diphenylamine were less than ten percent in the MS and/or the MSD. The parent sample was qualified as rejected for these compounds.

7. SDG (LC17068) Sample location DUP-2(031810) was collected as a field duplicate of F39SB008(4-5). The RPDs were acceptable at non-detect.

SDG (LD01022) Sample location DUP-3(033010) was collected as a field duplicate of F39TW02(20-25). The RPDs were acceptable at less than 40%.

SDG (LD09018) Sample location DUP-4(040710) was collected as a field duplicate of F39TW06(30-35). The RPDs were acceptable at non-detect.

SDG (LD09018) Sample location DUP01(040810) was collected as a field duplicate of F39SW-01(040810). The RPDs were acceptable at less than 40%.

METALS

Items Reviewed	DQM Deficiency		Qualification Applied	
	No	Yes	No	Yes
1. Holding times/Preservation	DQM		DQM	
2. Reporting limits	M		M	
3. Blanks				
A. Method blanks		DQM		DQM
B. Equipment blanks	NA		NA	
4. Laboratory control sample (LCS) A. LCS %R	DQM		DQM	
B. LCS duplicate (LCSD) %R	DQM		DQM	
C. LCS/LCSD RPD	DQM		DQM	
5. Matrix spike (MS)				
A. MS %R	DQM		DQM	
B. MS duplicate (MSD) %R	DQM		DQM	
C. MS/MSD precision (RPD)	DQM		DQM	
6. Field Duplicate precision (RPD)	DQM		DQM	

M – Manual Review %R - percent recovery RPD - relative percent difference DQM – Data Qualification Module

Comments:
This section presents a discussion of any additions or changes to the electronic data validation for compounds analyzed by Methods 6010C and 7471B.

3A. SDG (LC17068) The metals cadmium, chromium and selenium were detected in the method blank. The associated field samples were qualified as non-detect for these metals if the sample concentration was less than five times the blank value.

SDG (LD09009) The metals arsenic and silver were detected in the method blank. The associated field samples were qualified as non-detect for these metals if the sample concentration was less than five times the blank value.

SDG (LD09018) The metals cadmium, chromium and selenium were detected in the method blank for batch 31320. The associated field samples were qualified as non-detect for these metals if the sample concentration was less than five times the blank value.

SDG (LD09018) The metals arsenic and silver were detected in the method blank for batch 31332.

5. SDG (LC17068) Sample location F39SB009(0.5-1.0) was used as the MS/MSD. The recoveries and RPDs were acceptable.

SDG (LC17068) Sample location F39SB009(3.0-3.5) was used as the MS. The recoveries were acceptable.

SDG (LD09018) Sample location F39SED01(040810) was used as the MS/MSD. The recoveries and RPDs were acceptable.

SDG (LD09018) Sample location F39SED02(040810) was used as the MS. The recoveries were acceptable.

SDG (LD09018) Sample location F39SW-02(0408/10) was used as the MS/MSD for mercury. The recoveries and RPD were acceptable.

6. SDG (LC17068) Sample location DUP-2(031810) was collected as a field duplicate of F39SB008(4-5). The RPDs were acceptable at less than 40%.

   SDG (LD09018) Sample location DUP01(040810) was collected as a field duplicate of F39SW-01(040810). The RPDs were acceptable at less than 40%.

SDG	Sample ID	Method	Analyte	Result	Units	Qualifier	Reason	Dilution
LC13017	DUP-5 (031110)	SW8260	Acetone	1.5	ug/l	UB	Blank Contamination	1
LC13017	G4MW006 (031210)	SW8260	Acetone	1.2	ug/l	UB	Blank Contamination	1
LC13017	G4MW010 (031210)	SW8260	Acetone	2.5	ug/l	UB	Blank Contamination	1
LC13017	G4MW011 (031110)	SW8260	Acetone	1.3	ug/l	UB	Blank Contamination	1
LC13017	G4MW016 (031010)	SW8260	Acetone	1.3	ug/l	UB	Blank Contamination	1
LC13017	G4MW017 (031010)	SW8260	Acetone	1.9	ug/l	UB	Blank Contamination	1
LC13017	G4MW018 (031210)	SW8260	Acetone	1.4	ug/l	UB	Blank Contamination	1
LC13017	G4MW019 (031010)	SW8260	Acetone	1.8	ug/l	UB	Blank Contamination	1
LC13017	G4MW020 (031010)	SW8260	Acetone	1.2	ug/l	UB	Blank Contamination	1
LC13017	G4MW023 (031010)	SW8260	Acetone	1.5	ug/l	UB	Blank Contamination	1
LC13017	G4MW024 (031010)	SW8260	Acetone	3	ug/l	UB	Blank Contamination	1
LC13017	G4MW025 (031010)	SW8260	Acetone	1.8	ug/l	UB	Blank Contamination	1
LC13017	G4MW027 (031110)	SW8260	Acetone	1.8	ug/l	UB	Blank Contamination	1
LC13017	G4MW028 (031110)	SW8260	Acetone	1.8	ug/l	UB	Blank Contamination	1
LC13017	G4MW029 (031110)	SW8260	Acetone	1.1	ug/l	UB	Blank Contamination	1

SDG	Sample ID	Method	Analyte	Result	Units	Qualifier	Reason	Dilution
LC13017	G4MW031 (031010)	SW8260	Acetone	1.3	ug/l	UB	Blank Contamination	1
LC17068	DUP-2 (031810)	SW6010	Selenium	0.53	mg/kg	UB	Blank Contamination	1
LC17068	DUP-2 (031810)	SW6010	Cadmium	0.052	mg/kg	UB	Blank Contamination	1
LC17068	DUP-2 (031810)	SW8260	2-Butanone (MEK)	<9.4	ug/kg	UJ	LCS/LCSD RPD	1
LC17068	DUP-2 (031810)	SW8260	4-Methyl-2-pentanone	<9.4	ug/kg	UJ	LCS/LCSD RPD	1
LC17068	DUP-2 (031810)	SW8260	Acetone	19	ug/kg	UJ	Blank Contamination, LCSD Recovery and LCS/LCSD RPD	1
LC17068	DUP-2 (031810)	SW8260	Methyl acetate	<4.7	ug/kg	UJ	LCS/LCSD RPD	1
LC17068	DUP-2 (031810)	SW8260	2-Hexanone	<9.4	ug/kg	UJ	LCS/LCSD RPD	1
LC17068	F39SB001 (4.5-5.5)	SW6010	Selenium	0.67	mg/kg	UB	Blank Contamination	1
LC17068	F39SB001 (4.5-5.5)	SW6010	Cadmium	0.049	mg/kg	UB	Blank Contamination	1
LC17068	F39SB001 (4.5-5.5)	SW8260	Chloroethane	<4.5	ug/kg	UJ	LCS/LCSD RPD	1
LC17068	F39SB001 (4.5-5.5)	SW8260	Acetone	<18.0	ug/kg	UJ	LCS/LSD RPD	1
LC17068	F39SB001 (4.5-5.5)	SW8270	Nitrobenzene	<78.0	ug/kg	UJ	LCS/LCSD RPD	1
LC17068	F39SB001 (4.5-5.5)	SW8270	2-Chlorophenol	<78.0	ug/kg	UJ	LCS/LCSD RPD	1
LC17068	F39SB001 (4.5-5.5)	SW8270	2-Methylphenol	<78.0	ug/kg	UJ	LCS/LCSD RPD	1

SDG	Sample ID	Method	Analyte	Result	Units	Qualifier	Reason	Dilution
LC17068	F39SB001 (4.5-5.5)	SW8270	bis(2-Chloroethoxy) ether	<78.0	ug/kg	UJ	LCS/LCSD RPD	1
LC17068	F39SB001 (4.5-5.5)	SW8270	bis(2-chloroisopropyl) ether	<78.0	ug/kg	UJ	LCS/LCSD RPD	1
LC17068	F39SB002 (4-5)	SW6010	Cadmium	0.057	mg/kg	UB	Blank Contamination	1
LC17068	F39SB002 (4-5)	SW6010	Selenium	0.39	mg/kg	UB	Blank Contamination	1
LC17068	F39SB002 (4-5)	SW8260	Methyl acetate	<4.4	ug/kg	UJ	LCS/LCSD RPD	1
LC17068	F39SB002 (4-5)	SW8260	4-Methyl-2-pentanone	<8.8	ug/kg	UJ	LCS/LCSD RPD	1
LC17068	F39SB002 (4-5)	SW8260	2-Butanone (MEK)	<8.8	ug/kg	UJ	LCS/LCSD RPD	1
LC17068	F39SB002 (4-5)	SW8260	2-Hexanone	<8.8	ug/kg	UJ	LCS/LCSD RPD	1
LC17068	F39SB002 (4-5)	SW8260	Acetone	15	ug/kg	UJ	Blank Contamination, LCSD Recovery and LCS/LCSD RPD	1
LC17068	F39SB003 (4-5)	SW6010	Selenium	0.79	mg/kg	UB	Blank Contamination	1
LC17068	F39SB003 (4-5)	SW6010	Cadmium	0.027	mg/kg	UB	Blank Contamination	1
LC17068	F39SB003 (4-5)	SW8260	Chloroethane	<4.5	ug/kg	UJ	LCS/LCSD RPD	1
LC17068	F39SB003 (4-5)	SW8260	Acetone	63	ug/kg	J	LCS/LSD RPD	1
LC17068	F39SB004 (4-5)	SW6010	Selenium	0.44	mg/kg	UB	Blank Contamination	1
LC17068	F39SB004 (4-5)	SW6010	Cadmium	0.029	mg/kg	UB	Blank Contamination	1

SDG	Sample ID	Method	Analyte	Result	Units	Qualifier	Reason	Dilution
LC17068	F39SB004 (4-5)	SW8260	CFC-12	<4.7	ug/kg	UJ	LCS/LCSD RPD	1
LC17068	F39SB004 (4-5)	SW8260	CFC-11	<4.7	ug/kg	UJ	LCS/LCSD RPD	1
LC17068	F39SB004 (4-5)	SW8260	1,1,2-Trichloro-1,2,2-Trifluoroethane	<4.7	ug/kg	UJ	LCS/LCSD RPD	1
LC17068	F39SB004 (4-5)	SW8260	Methylcyclohexane	<4.7	ug/kg	UJ	LCS/LCSD RPD	1
LC17068	F39SB004 (4-5)	SW8260	Cyclohexane	<4.7	ug/kg	UJ	LCS/LCSD RPD	1
LC17068	F39SB004 (4-5)	SW8260	Bromomethane	<4.7	ug/kg	UJ	LCS/LCSD RPD	1
LC17068	F39SB004 (4-5)	SW8260	Chloromethane	<4.7	ug/kg	UJ	LCS/LCSD RPD	1
LC17068	F39SB004 (4-5)	SW8260	Chloroethane	<4.7	ug/kg	UJ	LCS/LCSD RPD	1
LC17068	F39SB004 (4-5)	SW8260	Vinyl Chloride	<4.7	ug/kg	UJ	LCS/LCSD RPD	1
LC17068	F39SB004 (4-5)	SW8260	1,1-Dichloroethylene	<4.7	ug/kg	UJ	LCS/LCSD RPD	1
LC17068	F39SB004 (4-5)	SW8260	Methyl acetate	<4.7	ug/kg	UJ	LCS/LCSD RPD	1
LC17068	F39SB005 (4-5)	SW6010	Cadmium	0.022	mg/kg	UB	Blank Contamination	1
LC17068	F39SB005 (4-5)	SW6010	Selenium	0.22	mg/kg	UB	Blank Contamination	1
LC17068	F39SB005 (4-5)	SW8260	Acetone	24	ug/kg	J	LCS/LSD RPD	1
LC17068	F39SB005 (4-5)	SW8260	Chloroethane	<4.7	ug/kg	UJ	LCS/LCSD RPD	1

SDG	Sample ID	Method	Analyte	Result	Units	Qualifier	Reason	Dilution
LC17068	F39SB006 (4-5)	SW6010	Selenium	0.55	mg/kg	UB	Blank Contamination	1
LC17068	F39SB006 (4-5)	SW6010	Cadmium	0.061	mg/kg	UB	Blank Contamination	1
LC17068	F39SB006 (4-5)	SW8260	Chloroethane	<4.4	ug/kg	UJ	LCS/LCSD RPD	1
LC17068	F39SB006 (4-5)	SW8260	Acetone	63	ug/kg	J	LCSD Recovery	1
LC17068	F39SB007 (4-5)	SW6010	Selenium	0.49	mg/kg	UB	Blank Contamination	1
LC17068	F39SB007 (4-5)	SW6010	Cadmium	0.1	mg/kg	UB	Blank Contamination	1
LC17068	F39SB007 (4-5)	SW8260	1,1,2-Trichloro-1,2,2-Trifluoroethane	<4.7	ug/kg	UJ	LCS/LCSD RPD	1
LC17068	F39SB007 (4-5)	SW8260	CFC-12	<4.7	ug/kg	UJ	LCS/LCSD RPD	1
LC17068	F39SB007 (4-5)	SW8260	Methyl acetate	<4.7	ug/kg	UJ	LCS/LCSD RPD	1
LC17068	F39SB007 (4-5)	SW8260	Methylcyclohexane	1	ug/kg	J	LCS/LCSD RPD	1
LC17068	F39SB007 (4-5)	SW8260	Vinyl Chloride	<4.7	ug/kg	UJ	LCS/LCSD RPD	1
LC17068	F39SB007 (4-5)	SW8260	Cyclohexane	<4.7	ug/kg	UJ	LCS/LCSD RPD	1
LC17068	F39SB007 (4-5)	SW8260	CFC-11	<4.7	ug/kg	UJ	LCS/LCSD RPD	1
LC17068	F39SB007 (4-5)	SW8260	Chloromethane	<4.7	ug/kg	UJ	LCS/LCSD RPD	1
LC17068	F39SB007 (4-5)	SW8260	Chloroethane	<4.7	ug/kg	UJ	LCS/LCSD RPD	1

SDG	Sample ID	Method	Analyte	Result	Units	Qualifier	Reason	Dilution
LC17068	F39SB007 (4-5)	SW8260	Bromomethane	<4.7	ug/kg	UJ	LCS/LCSD RPD	1
LC17068	F39SB007 (4-5)	SW8260	1,1-Dichloroethylene	<4.7	ug/kg	UJ	LCS/LCSD RPD	1
LC17068	F39SB008 (4-5)	SW6010	Selenium	0.47	mg/kg	UB	Blank Contamination	1
LC17068	F39SB008 (4-5)	SW6010	Cadmium	0.037	mg/kg	UB	Blank Contamination	1
LC17068	F39SB008 (4-5)	SW8260	2-Hexanone	<9.4	ug/kg	UJ	LCS/LCSD RPD	1
LC17068	F39SB008 (4-5)	SW8260	Acetone	31	ug/kg	UJ	Blank Contamination, LCSD Recovery and LCS/LCSD RPD	1
LC17068	F39SB008 (4-5)	SW8260	2-Butanone (MEK)	<9.4	ug/kg	UJ	LCS/LCSD RPD	1
LC17068	F39SB008 (4-5)	SW8260	Methyl acetate	<4.7	ug/kg	UJ	LCS/LCSD RPD	1
LC17068	F39SB008 (4-5)	SW8260	4-Methyl-2-pentanone	<9.4	ug/kg	UJ	LCS/LCSD RPD	1
LC17068	F39SB009 (0.5-1)	SW6010	Selenium	0.61	mg/kg	UB	Blank Contamination	1
LC17068	F39SB009 (0.5-1)	SW8260	1,1-Dichloroethylene	<5.3	ug/kg	UJ	LCS/LCSD RPD	1
LC17068	F39SB009 (0.5-1)	SW8260	Methylcyclohexane	<5.3	ug/kg	UJ	LCS/LCSD RPD	1
LC17068	F39SB009 (0.5-1)	SW8260	Cyclohexane	<5.3	ug/kg	UJ	LCS/LCSD RPD	1
LC17068	F39SB009 (0.5-1)	SW8260	Bromomethane	<5.3	ug/kg	UJ	LCS/LCSD RPD	1
LC17068	F39SB009 (0.5-1)	SW8260	Chloromethane	<5.3	ug/kg	UJ	LCS/LCSD RPD	1

SDG	Sample ID	Method	Analyte	Result	Units	Qualifier	Reason	Dilution
LC17068	F39SB009 (0.5-1)	SW8260	Chloroethane	<5.3	ug/kg	UJ	LCS/LCSD RPD	1
LC17068	F39SB009 (0.5-1)	SW8260	Vinyl Chloride	<5.3	ug/kg	UJ	LCS/LCSD RPD	1
LC17068	F39SB009 (0.5-1)	SW8260	CFC-12	<5.3	ug/kg	UJ	LCS/LCSD RPD	1
LC17068	F39SB009 (0.5-1)	SW8260	CFC-11	<5.3	ug/kg	UJ	LCS/LCSD RPD	1
LC17068	F39SB009 (0.5-1)	SW8260	1,1,2-Trichloro-1,2,2-Trifluoroethane	<5.3	ug/kg	UJ	LCS/LCSD RPD	1
LC17068	F39SB009 (0.5-1)	SW8260	Methyl acetate	<5.3	ug/kg	UJ	LCS/LCSD RPD	1
LC17068	F39SB009 (3.0-3.5)	SW6010	Cadmium	0.045	mg/kg	UB	Blank Contamination	1
LC17068	F39SB009 (3.0-3.5)	SW6010	Selenium	0.51	mg/kg	UB	Blank Contamination	1
LC17068	F39SB009 (3.0-3.5)	SW8260	Chloroethane	<5.0	ug/kg	UJ	LCS/LCSD RPD	1
LC17068	F39SB009 (3.0-3.5)	SW8260	Acetone	<20.0	ug/kg	UJ	LCS/LSD RPD	1
LC17068	F39SB010 (0.5-1.0)	SW6010	Cadmium	0.054	mg/kg	UB	Blank Contamination	1
LC17068	F39SB010 (0.5-1.0)	SW6010	Selenium	0.38	mg/kg	UB	Blank Contamination	1
LC17068	F39SB010 (0.5-1.0)	SW8260	Vinyl Chloride	<4.9	ug/kg	UJ	LCS/LCSD RPD	1
LC17068	F39SB010 (0.5-1.0)	SW8260	Methyl acetate	<4.9	ug/kg	UJ	LCS/LCSD RPD	1
LC17068	F39SB010 (0.5-1.0)	SW8260	1,1,2-Trichloro-1,2,2-Trifluoroethane	<4.9	ug/kg	UJ	LCS/LCSD RPD	1

SDG	Sample ID	Method	Analyte	Result	Units	Qualifier	Reason	Dilution
LC17068	F39SB010 (0.5-1.0)	SW8260	CFC-12	<4.9	ug/kg	UJ	LCS/LCSD RPD	1
LC17068	F39SB010 (0.5-1.0)	SW8260	1,1-Dichloroethylene	<4.9	ug/kg	UJ	LCS/LCSD RPD	1
LC17068	F39SB010 (0.5-1.0)	SW8260	Chloroethane	<4.9	ug/kg	UJ	LCS/LCSD RPD	1
LC17068	F39SB010 (0.5-1.0)	SW8260	Chloromethane	<4.9	ug/kg	UJ	LCS/LCSD RPD	1
LC17068	F39SB010 (0.5-1.0)	SW8260	Bromomethane	<4.9	ug/kg	UJ	LCS/LCSD RPD	1
LC17068	F39SB010 (0.5-1.0)	SW8260	Cyclohexane	<4.9	ug/kg	UJ	LCS/LCSD RPD	1
LC17068	F39SB010 (0.5-1.0)	SW8260	Methylcyclohexane	<4.9	ug/kg	UJ	LCS/LCSD RPD	1
LC17068	F39SB010 (0.5-1.0)	SW8260	CFC-11	<4.9	ug/kg	UJ	LCS/LCSD RPD	1
LC17068	F39SB010 (3.0-3.5)	SW6010	Cadmium	0.041	mg/kg	UB	Blank Contamination	1
LC17068	F39SB010 (3.0-3.5)	SW6010	Selenium	0.3	mg/kg	UB	Blank Contamination	1
LC17068	F39SB010 (3.0-3.5)	SW8260	Bromomethane	<4.7	ug/kg	UJ	LCS/LCSD RPD	1
LC17068	F39SB010 (3.0-3.5)	SW8260	Chloromethane	<4.7	ug/kg	UJ	LCS/LCSD RPD	1
LC17068	F39SB010 (3.0-3.5)	SW8260	Chloroethane	<4.7	ug/kg	UJ	LCS/LCSD RPD	1
LC17068	F39SB010 (3.0-3.5)	SW8260	Vinyl Chloride	<4.7	ug/kg	UJ	LCS/LCSD RPD	1
LC17068	F39SB010 (3.0-3.5)	SW8260	Cyclohexane	<4.7	ug/kg	UJ	LCS/LCSD RPD	1

SDG	Sample ID	Method	Analyte	Result	Units	Qualifier	Reason	Dilution
LC17068	F39SB010 (3.0-3.5)	SW8260	Methyl acetate	<4.7	ug/kg	UJ	LCS/LCSD RPD	1
LC17068	F39SB010 (3.0-3.5)	SW8260	1,1-Dichloroethylene	<4.7	ug/kg	UJ	LCS/LCSD RPD	1
LC17068	F39SB010 (3.0-3.5)	SW8260	1,1,2-Trichloro-1,2,2-Trifluoroethane	<4.7	ug/kg	UJ	LCS/LCSD RPD	1
LC17068	F39SB010 (3.0-3.5)	SW8260	CFC-12	<4.7	ug/kg	UJ	LCS/LCSD RPD	1
LC17068	F39SB010 (3.0-3.5)	SW8260	CFC-11	<4.7	ug/kg	UJ	LCS/LCSD RPD	1
LC17068	F39SB010 (3.0-3.5)	SW8260	Methylcyclohexane	<4.7	ug/kg	UJ	LCS/LCSD RPD	1
LC17068	F39SB011 (0.5-1.0)	SW6010	Cadmium	0.038	mg/kg	UB	Blank Contamination	1
LC17068	F39SB011 (0.5-1.0)	SW6010	Selenium	0.52	mg/kg	UB	Blank Contamination	1
LC17068	F39SB011 (0.5-1.0)	SW8260	1,1-Dichloroethylene	<4.4	ug/kg	UJ	LCS/LCSD RPD	1
LC17068	F39SB011 (0.5-1.0)	SW8260	Chloroethane	<4.4	ug/kg	UJ	LCS/LCSD RPD	1
LC17068	F39SB011 (0.5-1.0)	SW8260	CFC-12	<4.4	ug/kg	UJ	LCS/LCSD RPD	1
LC17068	F39SB011 (0.5-1.0)	SW8260	Chloromethane	<4.4	ug/kg	UJ	LCS/LCSD RPD	1
LC17068	F39SB011 (0.5-1.0)	SW8260	Vinyl Chloride	<4.4	ug/kg	UJ	LCS/LCSD RPD	1
LC17068	F39SB011 (0.5-1.0)	SW8260	Cyclohexane	<4.4	ug/kg	UJ	LCS/LCSD RPD	1
LC17068	F39SB011 (0.5-1.0)	SW8260	CFC-11	<4.4	ug/kg	UJ	LCS/LCSD RPD	1

SDG	Sample ID	Method	Analyte	Result	Units	Qualifier	Reason	Dilution
LC17068	F39SB011 (0.5-1.0)	SW8260	Methylcyclohexane	<4.4	ug/kg	UJ	LCS/LCSD RPD	1
LC17068	F39SB011 (0.5-1.0)	SW8260	1,1,2-Trichloro-1,2,2-Trifluoroethane	<4.4	ug/kg	UJ	LCS/LCSD RPD	1
LC17068	F39SB011 (0.5-1.0)	SW8260	Methyl acetate	<4.4	ug/kg	UJ	LCS/LCSD RPD	1
LC17068	F39SB011 (0.5-1.0)	SW8260	Bromomethane	<4.4	ug/kg	UJ	LCS/LCSD RPD	1
LC17068	F39SB011 (3.0-3.5)	SW6010	Selenium	0.38	mg/kg	UB	Blank Contamination	1
LC17068	F39SB011 (3.0-3.5)	SW6010	Cadmium	0.03	mg/kg	UB	Blank Contamination	1
LC17068	F39SB011 (3.0-3.5)	SW8260	Acetone	63	ug/kg	J	LCS/LSD RPD	1
LC17068	F39SB011 (3.0-3.5)	SW8260	Chloroethane	<4.9	ug/kg	UJ	LCS/LCSD RPD	1
LC17068	F39SB012 (0.5-1.0)	SW6010	Chromium	0.38	mg/kg	UB	Blank Contamination	1
LC17068	F39SB012 (0.5-1.0)	SW6010	Cadmium	0.014	mg/kg	UB	Blank Contamination	1
LC17068	F39SB012 (0.5-1.0)	SW8260	Cyclohexane	<4.5	ug/kg	UJ	LCS/LCSD RPD	1
LC17068	F39SB012 (0.5-1.0)	SW8260	Methylcyclohexane	<4.5	ug/kg	UJ	LCS/LCSD RPD	1
LC17068	F39SB012 (0.5-1.0)	SW8260	Chloromethane	<4.5	ug/kg	UJ	LCS/LCSD RPD	1
LC17068	F39SB012 (0.5-1.0)	SW8260	Bromomethane	<4.5	ug/kg	UJ	LCS/LCSD RPD	1
LC17068	F39SB012 (0.5-1.0)	SW8260	1,1-Dichloroethylene	<4.5	ug/kg	UJ	LCS/LCSD RPD	1

SDG	Sample ID	Method	Analyte	Result	Units	Qualifier	Reason	Dilution
LC17068	F39SB012 (0.5-1.0)	SW8260	Vinyl Chloride	<4.5	ug/kg	UJ	LCS/LCSD RPD	1
LC17068	F39SB012 (0.5-1.0)	SW8260	Methyl acetate	<4.5	ug/kg	UJ	LCS/LCSD RPD	1
LC17068	F39SB012 (0.5-1.0)	SW8260	1,1,2-Trichloro-1,2,2-Trifluoroethane	<4.5	ug/kg	UJ	LCS/LCSD RPD	1
LC17068	F39SB012 (0.5-1.0)	SW8260	CFC-12	<4.5	ug/kg	UJ	LCS/LCSD RPD	1
LC17068	F39SB012 (0.5-1.0)	SW8260	CFC-11	<4.5	ug/kg	UJ	LCS/LCSD RPD	1
LC17068	F39SB012 (0.5-1.0)	SW8260	Chloroethane	<4.5	ug/kg	UJ	LCS/LCSD RPD	1
LC17068	F39SB012 (3.0-3.5)	SW6010	Selenium	0.65	mg/kg	UB	Blank Contamination	1
LC17068	F39SB012 (3.0-3.5)	SW6010	Cadmium	0.038	mg/kg	UB	Blank Contamination	1
LC17068	F39SB012 (3.0-3.5)	SW8260	Vinyl Chloride	<4.2	ug/kg	UJ	LCS/LCSD RPD	1
LC17068	F39SB012 (3.0-3.5)	SW8260	Methyl acetate	<4.2	ug/kg	UJ	LCS/LCSD RPD	1
LC17068	F39SB012 (3.0-3.5)	SW8260	1,1,2-Trichloro-1,2,2-Trifluoroethane	<4.2	ug/kg	UJ	LCS/LCSD RPD	1
LC17068	F39SB012 (3.0-3.5)	SW8260	CFC-12	<4.2	ug/kg	UJ	LCS/LCSD RPD	1
LC17068	F39SB012 (3.0-3.5)	SW8260	1,1-Dichloroethylene	<4.2	ug/kg	UJ	LCS/LCSD RPD	1
LC17068	F39SB012 (3.0-3.5)	SW8260	Chloroethane	<4.2	ug/kg	UJ	LCS/LCSD RPD	1
LC17068	F39SB012 (3.0-3.5)	SW8260	Chloromethane	<4.2	ug/kg	UJ	LCS/LCSD RPD	1

SDG	Sample ID	Method	Analyte	Result	Units	Qualifier	Reason	Dilution
LC17068	F39SB012 (3.0-3.5)	SW8260	Bromomethane	<4.2	ug/kg	UJ	LCS/LCSD RPD	1
LC17068	F39SB012 (3.0-3.5)	SW8260	Cyclohexane	<4.2	ug/kg	UJ	LCS/LCSD RPD	1
LC17068	F39SB012 (3.0-3.5)	SW8260	Methylcyclohexane	<4.2	ug/kg	UJ	LCS/LCSD RPD	1
LC17068	F39SB012 (3.0-3.5)	SW8260	CFC-11	<4.2	ug/kg	UJ	LCS/LCSD RPD	1
LC17068	TRIP BLANK (031610)	SW8260	Tribromomethane	<0.50	ug/l	UJ	LCS Recovery	1
LC20005	F39TW01 (40-45)	SW8260	Acetone	6.9	ug/l	UB	Blank Contamination	1
LC20005	F39TW01 (40-45)	SW8260	CFC-11	<0.50	ug/l	UJ	LCS/LCSD RPD	1
LC20005	F39TW01 (40-45)	SW8260	Carbon disulfide	0.27	ug/l	UB	Blank Contamination	1
LC20005	F39TW01 (40-45)	SW8270	p-Chloroaniline	<1.0	ug/l	UJ	LCS Recovery and LCS/LCSD RPD	1
LC20005	Trip Blank (031810)	SW8260	CFC-11	<0.50	ug/l	UJ	LCS/LCSD RPD	1
LC20005	Trip Blank (031810)	SW8260	CFC-11	<0.50	ug/l	UJ	LCS/LCSD RPD	1
LD01022	DUP-3 (033010)	SW8260	Methylene Chloride	0.21	ug/l	UB	Blank Contamination	1
LD01022	DUP-3 (033010)	SW8260	Bromomethane	<0.50	ug/l	UJ	LCS/LCSD RPD	1
LD01022	F39TW01 (10-15)	SW8260	Acetone	4.6	ug/l	UB	Blank Contamination	1
LD01022	F39TW01 (10-15)	SW8260	Bromomethane	<0.50	ug/l	UJ	LCS/LCSD RPD	1

SDG	Sample ID	Method	Analyte	Result	Units	Qualifier	Reason	Dilution
LD01022	F39TW01 (10-15)	SW8260	Methylene Chloride	0.18	ug/l	UB	Blank Contamination	1
LD01022	F39TW01 (20-25)	SW8260	1,1,1-Trichloroethane	<0.50	ug/l	UJ	MS Recovery and MS/MSD RPD	1
LD01022	F39TW01 (20-25)	SW8260	1,1-Dichloroethylene	0.1	ug/l	J	MS/MSD Recovery and MS/MSD RPD	1
LD01022	F39TW01 (20-25)	SW8260	1,1-Dichloroethane	<0.50	ug/l	UJ	MS/MSD Recovery and MS/MSD RPD	1
LD01022	F39TW01 (20-25)	SW8260	Bromodichloromethane	<0.50	ug/l	UJ	MS Recovery and MS/MSD RPD	1
LD01022	F39TW01 (20-25)	SW8260	Tribromomethane	<0.50	ug/l	UJ	MS/MSD Recovery and MS/MSD RPD	1
LD01022	F39TW01 (20-25)	SW8260	Carbon disulfide	0.23	ug/l	J	MS Recovery and MS/MSD RPD	1
LD01022	F39TW01 (20-25)	SW8260	Methylene Chloride	<0.50	ug/l	UJ	MS/MSD Recovery and MS/MSD RPD	1
LD01022	F39TW01 (20-25)	SW8260	CFC-11	<0.50	ug/l	UJ	MS Recovery and MS/MSD RPD	1
LD01022	F39TW01 (20-25)	SW8260	Bromomethane	<0.50	ug/l	UJ	MS Recovery	1
LD01022	F39TW01 (20-25)	SW8260	1,1,2-Trichloroethane	<0.50	ug/l	UJ	MS Recovery and MS/MSD RPD	1
LD01022	F39TW01 (20-25)	SW8260	Vinyl Chloride	<0.50	ug/l	UJ	MS/MSD RPD	1
LD01022	F39TW01 (20-25)	SW8260	CFC-12	<0.50	ug/l	UJ	MS/MSD RPD	1
LD01022	F39TW01 (20-25)	SW8260	1,1,2-Trichloro-1,2,2-Trifluoroethane	<0.50	ug/l	UJ	MS Recovery and MS/MSD RPD	1
LD01022	F39TW01 (20-25)	SW8260	Methylcyclohexane	<5.0	ug/l	UJ	MS Recovery and MS/MSD RPD	1

SDG	Sample ID	Method	Analyte	Result	Units	Qualifier	Reason	Dilution
LD01022	F39TW01 (20-25)	SW8260	1,2-Dichloropropane	<0.50	ug/l	UJ	MS Recovery and MS/MSD RPD	1
LD01022	F39TW01 (20-25)	SW8260	2-Butanone (MEK)	<10.0	ug/l	UJ	MS Recovery and MS/MSD RPD	1
LD01022	F39TW01 (20-25)	SW8260	Trichloroethylene	40	ug/l	J	MS Recovery	1
LD01022	F39TW01 (20-25)	SW8260	Methyl acetate	<1.0	ug/l	UJ	MS/MSD RPD	1
LD01022	F39TW01 (20-25)	SW8260	1,1,2,2-Tetrachloroethane	<0.50	ug/l	UJ	MS Recovery and MS/MSD RPD	1
LD01022	F39TW01 (20-25)	SW8260	1,2-Dichlorobenzene	<0.50	ug/l	UJ	MS Recovery and MS/MSD RPD	1
LD01022	F39TW01 (20-25)	SW8260	1,2-Dibromo-3-chloropropane (DBCP)	<0.50	ug/l	UJ	MS Recovery and MS/MSD RPD	1
LD01022	F39TW01 (20-25)	SW8260	Benzene, 1-methylethyl	<0.50	ug/l	UJ	MS Recovery and MS/MSD RPD	1
LD01022	F39TW01 (20-25)	SW8260	Benzene	0.53	ug/l	J	MS Recovery and MS/MSD RPD	1
LD01022	F39TW01 (20-25)	SW8260	Cyclohexane	<0.50	ug/l	UJ	MS Recovery and MS/MSD RPD	1
LD01022	F39TW01 (20-25)	SW8260	Chlorobenzene	<0.50	ug/l	UJ	MS Recovery and MS/MSD RPD	1
LD01022	F39TW01 (20-25)	SW8260	Chloroform	<0.50	ug/l	UJ	MS/MSD Recovery and MS/MSD RPD	1
LD01022	F39TW01 (20-25)	SW8260	Ethylbenzene	<0.50	ug/l	UJ	MS Recovery and MS/MSD RPD	1
LD01022	F39TW01 (20-25)	SW8260	Styrene	<0.50	ug/l	UJ	MS/MSD Recovery and MS/MSD RPD	1
LD01022	F39TW01 (20-25)	SW8260	cis-1,3-Dichloropropene	<0.50	ug/l	UJ	MS/MSD Recovery and MS/MSD RPD	1

SDG	Sample ID	Method	Analyte	Result	Units	Qualifier	Reason	Dilution
LD01022	F39TW01 (20-25)	SW8260	trans-1,3-Dichloropropene	<0.50	ug/l	UJ	MS/MSD Recovery and MS/MSD RPD	1
LD01022	F39TW01 (20-25)	SW8260	1,4-Dichlorobenzene	<0.50	ug/l	UJ	MS Recovery and MS/MSD RPD	1
LD01022	F39TW01 (20-25)	SW8260	1,2-Dibromoethane (EDB)	<0.50	ug/l	UJ	MS Recovery and MS/MSD RPD	1
LD01022	F39TW01 (20-25)	SW8260	1,2-Dichloroethane	<0.50	ug/l	UJ	MS/MSD Recovery and MS/MSD RPD	1
LD01022	F39TW01 (20-25)	SW8260	Toluene	<0.50	ug/l	UJ	MS Recovery and MS/MSD RPD	1
LD01022	F39TW01 (20-25)	SW8260	1,2,4-Trichlorobenzene	<0.50	ug/l	UJ	MS Recovery and MS/MSD RPD	1
LD01022	F39TW01 (20-25)	SW8260	Chlorodibromomethane	<0.50	ug/l	UJ	MS/MSD Recovery and MS/MSD RPD	1
LD01022	F39TW01 (20-25)	SW8260	Tetrachloroethene	40	ug/l	J	MS Recovery	1
LD01022	F39TW01 (20-25)	SW8260	Xylenes (total)	<0.50	ug/l	UJ	MS Recovery and MS/MSD RPD	1
LD01022	F39TW01 (20-25)	SW8260	cis-1,2-Dichloroethene	4.4	ug/l	J	MS/MSD Recovery	1
LD01022	F39TW01 (20-25)	SW8260	trans-1,2-Dichloroethene	0.33	ug/l	J	MS/MSD Recovery	1
LD01022	F39TW01 (20-25)	SW8260	Methyl tert-butyl ether	<0.50	ug/l	UJ	MS/MSD Recovery and MS/MSD RPD	1
LD01022	F39TW01 (20-25)	SW8260	m-Dichlorobenzene	<0.50	ug/l	UJ	MS Recovery and MS/MSD RPD	1
LD01022	F39TW01 (20-25)	SW8260	Carbon Tetrachloride	<0.50	ug/l	UJ	MS/MSD Recovery and MS/MSD RPD	1
LD01022	F39TW01 (20-25)	SW8260	2-Hexanone	<10.0	ug/l	UJ	MS/MSD RPD	1

SDG	Sample ID	Method	Analyte	Result	Units	Qualifier	Reason	Dilution
LD01022	F39TW01 (20-25)	SW8260	Acetone	2.9	ug/l	J	MS/MSD Recovery	1
LD01022	F39TW01 (20-25)	SW8260	4-Methyl-2-pentanone	<10.0	ug/l	UJ	MS Recovery and MS/MSD RPD	1
LD01022	F39TW01 (20-25)	SW8270	Di-n-octyl phthalate	<5.4	ug/l	UJ	MS/MSD Recovery	1
LD01022	F39TW01 (20-25)	SW8270	Dibenzo(a,h)anthracene	<1.1	ug/l	UJ	MS/MSD Recovery	1
LD01022	F39TW01 (20-25)	SW8270	Benzo(a)anthracene	<1.1	ug/l	UJ	MS/MSD Recovery	1
LD01022	F39TW01 (20-25)	SW8270	Benzo(g,h,i)perylene	<1.1	ug/l	R	MS Recovery	1
LD01022	F39TW01 (20-25)	SW8270	Indeno(1,2,3-cd)pyrene	<1.1	ug/l	UJ	MS/MSD Recovery	1
LD01022	F39TW01 (20-25)	SW8270	1,2-Benz-phenanthracene	<1.1	ug/l	UJ	MS/MSD Recovery	1
LD01022	F39TW01 (30-35)	SW8260	1,2-Dibromo-3-chloropropane (DBCP)	<0.50	ug/l	UJ	LCSD Recovery	1
LD01022	F39TW02 (10-15)	SW8260	Bromomethane	<0.50	ug/l	UJ	LCS/LCSD RPD	1
LD01022	F39TW02 (10-15)	SW8260	Methylene Chloride	0.2	ug/l	UB	Blank Contamination	1
LD01022	F39TW02 (20-25)	SW8260	1,2-Dibromo-3-chloropropane (DBCP)	<0.50	ug/l	UJ	LCSD Recovery	1
LD01022	F39TW02 (30-35)	SW8260	1,2-Dibromo-3-chloropropane (DBCP)	<0.50	ug/l	UJ	LCSD Recovery	1
LD01022	F39TW02 (40-45)	SW8260	1,2-Dibromo-3-chloropropane (DBCP)	<0.50	ug/l	UJ	LCSD Recovery	1
LD01022	F39TW03 (10-15)	SW8260	Bromomethane	<0.50	ug/l	UJ	LCS/LCSD RPD	1

SDG	Sample ID	Method	Analyte	Result	Units	Qualifier	Reason	Dilution
LD01022	F39TW03 (10-15)	SW8260	Methylene Chloride	0.18	ug/l	UB	Blank Contamination	1
LD01022	F39TW03 (10-15)	SW8260	Acetone	5	ug/l	UB	Blank Contamination	1
LD01022	F39TW03 (20-25)	SW8260	Acetone	3.4	ug/l	UB	Blank Contamination	1
LD01022	F39TW03 (20-25)	SW8260	Carbon disulfide	0.14	ug/l	UB	Blank Contamination	1
LD01022	F39TW03 (20-25)	SW8260	Methylene Chloride	0.17	ug/l	UB	Blank Contamination	1
LD01022	F39TW03 (30-35)	SW8260	Methylene Chloride	0.2	ug/l	UB	Blank Contamination	1
LD01022	F39TW03 (30-35)	SW8260	Acetone	2.4	ug/l	UB	Blank Contamination	1
LD01022	F39TW03 (40-45)	SW8260	Methylene Chloride	0.2	ug/l	UB	Blank Contamination	1
LD01022	F39TW03 (40-45)	SW8260	Acetone	5.2	ug/l	UB	Blank Contamination	1
LD01022	F39TW03 (40-45)	SW8260	Bromomethane	<0.50	ug/l	UJ	LCS/LCSD RPD	1
LD01022	F39TW03 (40-45)	SW8270	Acenaphthylene	<1.0	ug/l	R	Surrogate Recovery	1
LD01022	F39TW03 (40-45)	SW8270	Di-n-butyl phthalate	<5.2	ug/l	R	Surrogate Recovery	1
LD01022	F39TW03 (40-45)	SW8270	Hexachlorobenzene	<1.0	ug/l	R	Surrogate Recovery	1
LD01022	F39TW03 (40-45)	SW8270	Anthracene	<1.0	ug/l	R	Surrogate Recovery	1
LD01022	F39TW03 (40-45)	SW8270	2,4-Dinitrotoluene	<2.1	ug/l	R	Surrogate Recovery	1

SDG	Sample ID	Method	Analyte	Result	Units	Qualifier	Reason	Dilution
LD01022	F39TW03 (40-45)	SW8270	Pyrene	<1.0	ug/l	R	Surrogate Recovery	1
LD01022	F39TW03 (40-45)	SW8270	Dimethyl Phthalate	<5.2	ug/l	R	Surrogate Recovery	1
LD01022	F39TW03 (40-45)	SW8270	Dibenzofuran	<1.0	ug/l	R	Surrogate Recovery	1
LD01022	F39TW03 (40-45)	SW8270	Atrazine	<1.0	ug/l	R	Surrogate Recovery	1
LD01022	F39TW03 (40-45)	SW8270	Benzo(g,h,i)perylene	<1.0	ug/l	R	Surrogate Recovery	1
LD01022	F39TW03 (40-45)	SW8270	Indeno(1,2,3-cd)pyrene	<1.0	ug/l	R	Surrogate Recovery	1
LD01022	F39TW03 (40-45)	SW8270	Benzo(b)fluoranthene	<1.0	ug/l	R	Surrogate Recovery	1
LD01022	F39TW03 (40-45)	SW8270	bis(2-Ethylhexyl)phthalate	<5.2	ug/l	R	Surrogate Recovery	1
LD01022	F39TW03 (40-45)	SW8270	Benzo(k)fluoranthene	<1.0	ug/l	R	Surrogate Recovery	1
LD01022	F39TW03 (40-45)	SW8270	bis(2-Chloroethoxy)methane	<1.0	ug/l	R	Surrogate Recovery	1
LD01022	F39TW03 (40-45)	SW8270	1,2-Benz-phenanthracene	<1.0	ug/l	R	Surrogate Recovery	1
LD01022	F39TW03 (40-45)	SW8270	Benzo(a)pyrene	<1.0	ug/l	R	Surrogate Recovery	1
LD01022	F39TW03 (40-45)	SW8270	Dibenzo(a,h)anthracene	<1.0	ug/l	R	Surrogate Recovery	1
LD01022	F39TW03 (40-45)	SW8270	Benzo(a)anthracene	<1.0	ug/l	R	Surrogate Recovery	1
LD01022	F39TW03 (40-45)	SW8270	2,6-Dinitroluene	<2.1	ug/l	R	Surrogate Recovery	1

SDG	Sample ID	Method	Analyte	Result	Units	Qualifier	Reason	Dilution
LD01022	F39TW03 (40-45)	SW8270	N-Nitroso di-n-propylamine	<1.0	ug/l	R	Surrogate Recovery	1
LD01022	F39TW03 (40-45)	SW8270	Hexachloroethane	<1.0	ug/l	R	Surrogate Recovery	1
LD01022	F39TW03 (40-45)	SW8270	4-Chlorophenyl Phenyl Ether	<1.0	ug/l	R	Surrogate Recovery	1
LD01022	F39TW03 (40-45)	SW8270	Hexachlorocyclopentadiene	<5.2	ug/l	R	Surrogate Recovery	1
LD01022	F39TW03 (40-45)	SW8270	3,5,5-Trimethyl-2-cyclohexene-1-one	<1.0	ug/l	R	Surrogate Recovery	1
LD01022	F39TW03 (40-45)	SW8270	Acenaphthene	<1.0	ug/l	R	Surrogate Recovery	1
LD01022	F39TW03 (40-45)	SW8270	Diethyl phthalate	<5.2	ug/l	R	Surrogate Recovery	1
LD01022	F39TW03 (40-45)	SW8270	Fluoranthene	<1.0	ug/l	R	Surrogate Recovery	1
LD01022	F39TW03 (40-45)	SW8270	2-Nitroaniline	<2.1	ug/l	R	Surrogate Recovery	1
LD01022	F39TW03 (40-45)	SW8270	p-Nitroaniline	<2.1	ug/l	R	Surrogate Recovery	1
LD01022	F39TW03 (40-45)	SW8270	3-Nitroaniline	<2.1	ug/l	R	Surrogate Recovery	1
LD01022	F39TW03 (40-45)	SW8270	Nitrobenzene	<1.0	ug/l	R	Surrogate Recovery	1
LD01022	F39TW03 (40-45)	SW8270	Acetophenone	<1.0	ug/l	R	Surrogate Recovery	1
LD01022	F39TW03 (40-45)	SW8270	1,1'-Biphenyl	<1.0	ug/l	R	Surrogate Recovery	1
LD01022	F39TW03 (40-45)	SW8270	3,3'-Dichlorobenzidine	<5.2	ug/l	R	Surrogate Recovery	1

SDG	Sample ID	Method	Analyte	Result	Units	Qualifier	Reason	Dilution
LD01022	F39TW03 (40-45)	SW8270	2-Chloronaphthalene	<1.0	ug/l	R	Surrogate Recovery	1
LD01022	F39TW03 (40-45)	SW8270	Di-n-octyl phthalate	<5.2	ug/l	R	Surrogate Recovery	1
LD01022	F39TW03 (40-45)	SW8270	Naphthalene	<1.0	ug/l	R	Surrogate Recovery	1
LD01022	F39TW03 (40-45)	SW8270	Hexachloro-1,3-Butadiene	<1.0	ug/l	R	Surrogate Recovery	1
LD01022	F39TW03 (40-45)	SW8270	4-Bromophenyl Phenyl Ether	<1.0	ug/l	R	Surrogate Recovery	1
LD01022	F39TW03 (40-45)	SW8270	bis(2-Chloroethoxy) ether	<1.0	ug/l	R	Surrogate Recovery	1
LD01022	F39TW03 (40-45)	SW8270	bis(2-chloroisopropyl) ether	<1.0	ug/l	R	Surrogate Recovery	1
LD01022	F39TW03 (40-45)	SW8270	2-Methyl naphthalene	<1.0	ug/l	R	Surrogate Recovery	1
LD01022	F39TW03 (40-45)	SW8270	Caprolactam	<5.2	ug/l	R	Surrogate Recovery	1
LD01022	F39TW03 (40-45)	SW8270	Carbazole	<1.0	ug/l	R	Surrogate Recovery	1
LD01022	F39TW03 (40-45)	SW8270	Benzaldehyde	<5.2	ug/l	R	Surrogate Recovery	1
LD01022	F39TW03 (40-45)	SW8270	Phenanthrene	<1.0	ug/l	R	Surrogate Recovery	1
LD01022	F39TW03 (40-45)	SW8270	Benzyl Butyl Phthalate	<5.2	ug/l	R	Surrogate Recovery	1
LD01022	F39TW03 (40-45)	SW8270	N-Nitrosodiphenylamine	<1.0	ug/l	R	Surrogate Recovery	1
LD01022	F39TW03 (40-45)	SW8270	Fluorene	<1.0	ug/l	R	Surrogate Recovery	1

SDG	Sample ID	Method	Analyte	Result	Units	Qualifier	Reason	Dilution
LD01022	F39TW03 (40-45)	SW8270	p-Chloroaniline	<1.0	ug/l	R	Surrogate Recovery	1
LD01022	F39TW04 (10-15)	SW8260	Acetone	3.5	ug/l	UB	Blank Contamination	1
LD01022	F39TW04 (10-15)	SW8260	Methylene Chloride	0.19	ug/l	UB	Blank Contamination	1
LD01022	F39TW04 (10-15)	SW8260	Carbon disulfide	0.18	ug/l	UB	Blank Contamination	1
LD01022	F39TW04 (20-25)	SW8260	Acetone	4.3	ug/l	UB	Blank Contamination	1
LD01022	F39TW04 (20-25)	SW8260	Methylene Chloride	0.17	ug/l	UB	Blank Contamination	1
LD01022	F39TW04 (20-25)	SW8260	Carbon disulfide	0.4	ug/l	UB	Blank Contamination	1
LD01022	F39TW04 (30-35)	SW8260	Carbon disulfide	0.8	ug/l	UB	Blank Contamination	1
LD01022	F39TW04 (30-35)	SW8260	Methylene Chloride	0.17	ug/l	UB	Blank Contamination	1
LD01022	F39TW04 (30-35)	SW8260	Acetone	5.8	ug/l	UB	Blank Contamination	1
LD01022	F39TW04 (40-45)	SW8260	Methylene Chloride	0.2	ug/l	UB	Blank Contamination	1
LD01022	F39TW04 (40-45)	SW8260	Acetone	8.6	ug/l	UB	Blank Contamination	1
LD09009	G4MW033 (040710)	SW6010	Arsenic	0.0047	mg/l	UB	Blank Contamination	1
LD09009	G4MW033 (040710)	SW8260	Methylene Chloride	0.24	ug/l	UB	Blank Contamination	1
LD09009	G4MW033 (040710)	SW8260	Acetone	3.6	ug/l	UB	Blank Contamination	1

SDG	Sample ID	Method	Analyte	Result	Units	Qualifier	Reason	Dilution
LD09009	G4MW034 (040610)	SW6010	Silver	0.0008	mg/l	UB	Blank Contamination	1
LD09009	G4MW034 (040610)	SW6010	Arsenic	0.0049	mg/l	UB	Blank Contamination	1
LD09009	G4MW034 (040610)	SW8260	Acetone	1.8	ug/l	UB	Blank Contamination	1
LD09009	G4MW034 (040610)	SW8260	Methylene Chloride	0.23	ug/l	UB	Blank Contamination	1
LD09009	G4MW034 (040610)	SW8270	bis(2-Ethylhexyl)phthalate	<5.1	ug/l	UJ	MS/MSD RPD	1
LD09009	G4MW034 (040610)	SW8270	p-Nitroaniline	<2.0	ug/l	R	MSD Recovery	1
LD09009	G4MW034 (040610)	SW8270	bis(2-Chloroethoxy)methane	<1.0	ug/l	UJ	MS/MSD Recovery	1
LD09009	G4MW034 (040610)	SW8270	N-Nitrosodiphenylamine	<1.0	ug/l	UJ	MS/MSD RPD	1
LD09009	G4MW034 (040610)	SW8270	Di-n-octyl phthalate	<5.1	ug/l	UJ	MS/MSD RPD	1
LD09009	G4MW034 (040610)	SW8270	Benzo(g,h,i)perylene	<1.0	ug/l	UJ	MS/MSD RPD	1
LD09009	G4MW034 (040610)	SW8270	Indeno(1,2,3-cd)pyrene	<1.0	ug/l	UJ	MS/MSD RPD	1
LD09009	G4MW034 (040610)	SW8270	Benzo(b)fluoranthene	<1.0	ug/l	UJ	MS/MSD RPD	1
LD09009	G4MW034 (040610)	SW8270	Benzo(k)fluoranthene	<1.0	ug/l	UJ	MS/MSD RPD	1
LD09009	G4MW034 (040610)	SW8270	Benzo(a)pyrene	<1.0	ug/l	UJ	MS/MSD RPD	1
LD09009	G4MW034 (040610)	SW8270	Dibenzo(a,h)anthracene	<1.0	ug/l	UJ	MSD Recovery and MS/MSD RPD	1

SDG	Sample ID	Method	Analyte	Result	Units	Qualifier	Reason	Dilution
LD09009	G4MW034 (040610)	SW8270	N-Nitroso di-n-propylamine	<1.0	ug/l	UJ	MS Recovery	1
LD09009	G4MW034 (040610)	SW8270	3,5,5-Trimethyl-2-cyclohexene-1-one	<1.0	ug/l	UJ	MS Recovery	1
LD09009	G4MW034 (040610)	SW8270	Carbazole	<1.0	ug/l	UJ	MSD Recovery and MS/MSD RPD	1
LD09009	G4MW034 (040610)	SW8270	2-Methyl naphthalene	<1.0	ug/l	UJ	MS Recovery	1
LD09009	G4MW034 (040610)	SW8270	3-Nitroaniline	<2.0	ug/l	R	MSD Recovery	1
LD09009	G4MW034 (040610)	SW8270	p-Chloroaniline	<1.0	ug/l	R	MSD Recovery	1
LD09009	G4MW034 (040610)	SW8270	Naphthalene	<1.0	ug/l	UJ	MS Recovery	1
LD09009	G4MW035 (040610)	SW8260	Methylene Chloride	0.23	ug/l	UB	Blank Contamination	1
LD09009	G4MW035 (040610)	SW8260	Acetone	4.3	ug/l	UB	Blank Contamination	1
LD09009	G4MW036 (040610)	SW6010	Arsenic	0.0099	mg/l	UB	Blank Contamination	1
LD09009	G4MW036 (040610)	SW8260	Methylene Chloride	0.26	ug/l	UB	Blank Contamination	1
LD09009	G4MW036 (040610)	SW8260	Acetone	9.6	ug/l	UB	Blank Contamination	1
LD09009	Trip Blank (040810)	SW8260	Methylene Chloride	0.25	ug/l	UB	Blank Contamination	1
LD09009	Trip Blank (040810)	SW8260	Acetone	2.2	ug/l	UB	Blank Contamination	1
LD09018	DUP01 (040810)	SW6010	Arsenic	0.016	mg/l	UB	Blank Contamination	1

SDG	Sample ID	Method	Analyte	Result	Units	Qualifier	Reason	Dilution
LD09018	DUP01 (040810)	SW8260	Bromomethane	<0.50	ug/l	UJ	LCS/LCSD RPD	1
LD09018	DUP01 (040810)	SW8260	Trichloroethylene	4.3	ug/l	J	FD RPD	1
LD09018	DUP01 (040810)	SW8270	Benzo(b)fluoranthene	<1.0	ug/l	UJ	LCS Recovery	1
LD09018	DUP01 (040810)	SW8270	Anthracene	<1.0	ug/l	UJ	LCS Recovery	1
LD09018	DUP01 (040810)	SW8270	Pyrene	<1.0	ug/l	UJ	LCS Recovery	1
LD09018	DUP01 (040810)	SW8270	Benzo(g,h,i)perylene	<1.0	ug/l	UJ	LCS Recovery	1
LD09018	DUP01 (040810)	SW8270	Indeno(1,2,3-cd)pyrene	<1.0	ug/l	UJ	LCS Recovery	1
LD09018	DUP01 (040810)	SW8270	Fluoranthene	<1.0	ug/l	UJ	LCS Recovery	1
LD09018	DUP01 (040810)	SW8270	1,2-Benz-phenanthracene	<1.0	ug/l	UJ	LCS Recovery	1
LD09018	DUP01 (040810)	SW8270	Benzo(a)pyrene	<1.0	ug/l	UJ	LCS Recovery	1
LD09018	DUP01 (040810)	SW8270	Benzyl Butyl Phthalate	<5.0	ug/l	UJ	LCS Recovery	1
LD09018	DUP01 (040810)	SW8270	Phenanthrene	<1.0	ug/l	UJ	LCS Recovery	1
LD09018	DUP01 (040810)	SW8270	Acenaphthene	<1.0	ug/l	UJ	LCS Recovery	1
LD09018	DUP01 (040810)	SW8270	Dibenzo(a,h)anthracene	<1.0	ug/l	UJ	LCS Recovery	1
LD09018	DUP01 (040810)	SW8270	Benzo(a)anthracene	<1.0	ug/l	UJ	LCS Recovery	1

SDG	Sample ID	Method	Analyte	Result	Units	Qualifier	Reason	Dilution
LD09018	DUP01 (040810)	SW8270	4-Bromophenyl Phenyl Ether	<1.0	ug/l	UJ	LCS Recovery	1
LD09018	DUP-4 (040710)	SW8260	Methylene Chloride	0.26	ug/l	UB	Blank Contamination	1
LD09018	F39SED01 (040810)	SW6010	Selenium	0.35	mg/kg	UB	Blank Contamination	1
LD09018	F39SED01 (040810)	SW8270	2,4-Dinitrophenol	<450.0	ug/kg	UJ	MS/MSD RPD	1
LD09018	F39SED01 (040810)	SW8270	Hexachloroethane	<92.0	ug/kg	UJ	MS Recovery and MS/MSD RPD	1
LD09018	F39SED01 (040810)	SW8270	Hexachlorocyclopentadiene	<450.0	ug/kg	UJ	MS/MSD Recovery	1
LD09018	F39SED01 (040810)	SW8270	bis(2-chloroisopropyl) ether	<92.0	ug/kg	UJ	MS/MSD RPD	1
LD09018	F39SED01 (040810)	SW8270	Pyrene	<92.0	ug/kg	UJ	MS/MSD RPD	1
LD09018	F39SED01 (040810)	SW8270	bis(2-Chloroethoxy) ether	<92.0	ug/kg	UJ	MS/MSD RPD	1
LD09018	F39SED01 (040810)	SW8270	1,2-Benz-phenanthracene	<92.0	ug/kg	UJ	MS/MSD RPD	1
LD09018	F39SED01 (040810)	SW8270	Hexachloro-1,3-Butadiene	<92.0	ug/kg	UJ	MS/MSD RPD	1
LD09018	F39SED02 (040810)	SW6010	Cadmium	0.11	mg/kg	UB	Blank Contamination	1
LD09018	F39SED02 (040810)	SW6010	Selenium	0.4	mg/kg	UB	Blank Contamination	1
LD09018	F39SED03 (040810)	SW6010	Cadmium	0.096	mg/kg	UB	Blank Contamination	1
LD09018	F39SED03 (040810)	SW6010	Selenium	0.51	mg/kg	UB	Blank Contamination	1

SDG	Sample ID	Method	Analyte	Result	Units	Qualifier	Reason	Dilution
LD09018	F39SED04 (040810)	SW6010	Cadmium	0.053	mg/kg	UB	Blank Contamination	1
LD09018	F39SED04 (040810)	SW6010	Selenium	0.26	mg/kg	UB	Blank Contamination	1
LD09018	F39SED05 (040810)	SW6010	Selenium	0.21	mg/kg	UB	Blank Contamination	1
LD09018	F39SED05 (040810)	SW6010	Cadmium	0.033	mg/kg	UB	Blank Contamination	1
LD09018	F39SED06 (040810)	SW6010	Cadmium	0.11	mg/kg	UB	Blank Contamination	1
LD09018	F39SED06 (040810)	SW6010	Selenium	0.33	mg/kg	UB	Blank Contamination	1
LD09018	F39SED07 (040810)	SW6010	Cadmium	0.087	mg/kg	UB	Blank Contamination	1
LD09018	F39SED08 (040810)	SW6010	Selenium	1	mg/kg	UB	Blank Contamination	1
LD09018	F39SW-01 (040810)	SW6010	Silver	0.0005	mg/l	UB	Blank Contamination	1
LD09018	F39SW-01 (040810)	SW8260	Trichloroethylene	1.5	ug/l	J	FD RPD	1
LD09018	F39SW-01 (040810)	SW8260	Acetone	1.7	ug/l	UB	Blank Contamination	1
LD09018	F39SW-01 (040810)	SW8260	Methylene Chloride	0.23	ug/l	UB	Blank Contamination	1
LD09018	F39SW-01 (040810)	SW8260	Bromomethane	<0.50	ug/l	UJ	LCS/LCSD RPD	1
LD09018	F39SW-01 (040810)	SW8270	Benzyl Butyl Phthalate	<5.0	ug/l	UJ	LCS Recovery	1
LD09018	F39SW-01 (040810)	SW8270	Benzo(a)anthracene	<1.0	ug/l	UJ	LCS Recovery	1

SDG	Sample ID	Method	Analyte	Result	Units	Qualifier	Reason	Dilution
LD09018	F39SW-01 (040810)	SW8270	N-Nitroso di-n-propylamine	<1.0	ug/l	UJ	MS/MSD RPD	1
LD09018	F39SW-01 (040810)	SW8270	Hexachloroethane	<1.0	ug/l	UJ	MS/MSD RPD	1
LD09018	F39SW-01 (040810)	SW8270	Acenaphthene	<1.0	ug/l	UJ	LCS Recovery	1
LD09018	F39SW-01 (040810)	SW8270	Pyrene	<1.0	ug/l	UJ	LCS Recovery	1
LD09018	F39SW-01 (040810)	SW8270	Dibenzo(a,h)anthracene	<1.0	ug/l	UJ	LCS Recovery and MS/MSD RPD	1
LD09018	F39SW-01 (040810)	SW8270	N-Nitrosodiphenylamine	<1.0	ug/l	UJ	MS/MSD RPD	1
LD09018	F39SW-01 (040810)	SW8270	Carbazole	<1.0	ug/l	UJ	LCS Recovery and MS/MSD RPD	1
LD09018	F39SW-01 (040810)	SW8270	2-Chlorophenol	<1.0	ug/l	UJ	MS/MSD RPD	1
LD09018	F39SW-01 (040810)	SW8270	Nitrobenzene	<1.0	ug/l	UJ	MS/MSD RPD	1
LD09018	F39SW-01 (040810)	SW8270	3-Nitroaniline	<2.0	ug/l	R	LCS Recovery	1
LD09018	F39SW-01 (040810)	SW8270	Phenanthrene	<1.0	ug/l	UJ	LCS Recovery	1
LD09018	F39SW-01 (040810)	SW8270	p-Nitroaniline	<2.0	ug/l	UJ	MS/MSD RPD	1
LD09018	F39SW-01 (040810)	SW8270	1,2-Benz-phenanthracene	<1.0	ug/l	UJ	LCS Recovery	1
LD09018	F39SW-01 (040810)	SW8270	Benzo(k)fluoranthene	<1.0	ug/l	UJ	MS/MSD RPD	1
LD09018	F39SW-01 (040810)	SW8270	Fluoranthene	<1.0	ug/l	UJ	LCS Recovery	1

SDG	Sample ID	Method	Analyte	Result	Units	Qualifier	Reason	Dilution
LD09018	F39SW-01 (040810)	SW8270	Benzo(b)fluoranthene	<1.0	ug/l	UJ	LCS Recovery and MS/MSD RPD	1
LD09018	F39SW-01 (040810)	SW8270	Benzo(g,h,i)perylene	<1.0	ug/l	UJ	LCS Recovery and MS/MSD RPD	1
LD09018	F39SW-01 (040810)	SW8270	Anthracene	<1.0	ug/l	UJ	LCS Recovery	1
LD09018	F39SW-01 (040810)	SW8270	Di-n-octyl phthalate	<5.0	ug/l	UJ	MS/MSD RPD	1
LD09018	F39SW-01 (040810)	SW8270	bis(2-Chloroethoxy)methane	<1.0	ug/l	UJ	LCS Recovery and MS/MSD RPD	1
LD09018	F39SW-01 (040810)	SW8270	p-Chloroaniline	<1.0	ug/l	R	LCS Recovery	1
LD09018	F39SW-01 (040810)	SW8270	4-Bromophenyl Phenyl Ether	<1.0	ug/l	UJ	LCS Recovery	1
LD09018	F39SW-01 (040810)	SW8270	Benzo(a)pyrene	<1.0	ug/l	UJ	LCS Recovery and MS/MSD RPD	1
LD09018	F39SW-01 (040810)	SW8270	Indeno(1,2,3-cd)pyrene	<1.0	ug/l	UJ	LCS Recovery and MS/MSD RPD	1
LD09018	F39SW-02 (040810)	SW6010	Arsenic	0.006	mg/l	UB	Blank Contamination	1
LD09018	F39SW-02 (040810)	SW6010	Silver	0.0011	mg/l	UB	Blank Contamination	1
LD09018	F39SW-02 (040810)	SW8260	Acetone	4	ug/l	UB	Blank Contamination	1
LD09018	F39SW-02 (040810)	SW8260	Bromomethane	<0.50	ug/l	UJ	LCS/LCSD RPD	1
LD09018	F39SW-02 (040810)	SW8260	Methylene Chloride	0.22	ug/l	UB	Blank Contamination	1
LD09018	F39SW-02 (040810)	SW8270	Benzo(a)pyrene	<1.0	ug/l	UJ	LCS Recovery	1

SDG	Sample ID	Method	Analyte	Result	Units	Qualifier	Reason	Dilution
LD09018	F39SW-02 (040810)	SW8270	Pyrene	<1.0	ug/l	UJ	LCS Recovery	1
LD09018	F39SW-02 (040810)	SW8270	Benzyl Butyl Phthalate	<5.0	ug/l	UJ	LCS Recovery	1
LD09018	F39SW-02 (040810)	SW8270	Phenanthrene	<1.0	ug/l	UJ	LCS Recovery	1
LD09018	F39SW-02 (040810)	SW8270	Acenaphthene	<1.0	ug/l	UJ	LCS Recovery	1
LD09018	F39SW-02 (040810)	SW8270	Benzo(a)anthracene	<1.0	ug/l	UJ	LCS Recovery	1
LD09018	F39SW-02 (040810)	SW8270	Dibenzo(a,h)anthracene	<1.0	ug/l	UJ	LCS Recovery	1
LD09018	F39SW-02 (040810)	SW8270	Anthracene	<1.0	ug/l	UJ	LCS Recovery	1
LD09018	F39SW-02 (040810)	SW8270	Fluoranthene	<1.0	ug/l	UJ	LCS Recovery	1
LD09018	F39SW-02 (040810)	SW8270	Benzo(b)fluoranthene	<1.0	ug/l	UJ	LCS Recovery	1
LD09018	F39SW-02 (040810)	SW8270	4-Bromophenyl Phenyl Ether	<1.0	ug/l	UJ	LCS Recovery	1
LD09018	F39SW-02 (040810)	SW8270	Benzo(g,h,i)perylene	<1.0	ug/l	UJ	LCS Recovery	1
LD09018	F39SW-02 (040810)	SW8270	Indeno(1,2,3-cd)pyrene	<1.0	ug/l	UJ	LCS Recovery	1
LD09018	F39SW-02 (040810)	SW8270	1,2-Benz-phenanthracene	<1.0	ug/l	UJ	LCS Recovery	1
LD09018	F39SW-03 (040810)	SW8260	Bromomethane	<0.50	ug/l	UJ	LCS/LCSD RPD	1
LD09018	F39SW-03 (040810)	SW8260	Acetone	5.9	ug/l	UB	Blank Contamination	1

SDG	Sample ID	Method	Analyte	Result	Units	Qualifier	Reason	Dilution
LD09018	F39SW-03 (040810)	SW8260	Methylene Chloride	0.2	ug/l	UB	Blank Contamination	1
LD09018	F39SW-03 (040810)	SW8270	Benzo(a)pyrene	<1.0	ug/l	UJ	LCS Recovery	1
LD09018	F39SW-03 (040810)	SW8270	Phenanthrene	<1.0	ug/l	UJ	LCS Recovery	1
LD09018	F39SW-03 (040810)	SW8270	Acenaphthene	<1.0	ug/l	UJ	LCS Recovery	1
LD09018	F39SW-03 (040810)	SW8270	Benzo(a)anthracene	<1.0	ug/l	UJ	LCS Recovery	1
LD09018	F39SW-03 (040810)	SW8270	Dibenzo(a,h)anthracene	<1.0	ug/l	UJ	LCS Recovery	1
LD09018	F39SW-03 (040810)	SW8270	Benzyl Butyl Phthalate	<5.0	ug/l	UJ	LCS Recovery	1
LD09018	F39SW-03 (040810)	SW8270	Fluoranthene	<1.0	ug/l	UJ	LCS Recovery	1
LD09018	F39SW-03 (040810)	SW8270	Benzo(b)fluoranthene	<1.0	ug/l	UJ	LCS Recovery	1
LD09018	F39SW-03 (040810)	SW8270	Indeno(1,2,3-cd)pyrene	<1.0	ug/l	UJ	LCS Recovery	1
LD09018	F39SW-03 (040810)	SW8270	Benzo(g,h,i)perylene	<1.0	ug/l	UJ	LCS Recovery	1
LD09018	F39SW-03 (040810)	SW8270	Pyrene	<1.0	ug/l	UJ	LCS Recovery	1
LD09018	F39SW-03 (040810)	SW8270	4-Bromophenyl Phenyl Ether	<1.0	ug/l	UJ	LCS Recovery	1
LD09018	F39SW-03 (040810)	SW8270	Anthracene	<1.0	ug/l	UJ	LCS Recovery	1
LD09018	F39SW-03 (040810)	SW8270	1,2-Benz-phenanthracene	<1.0	ug/l	UJ	LCS Recovery	1

SDG	Sample ID	Method	Analyte	Result	Units	Qualifier	Reason	Dilution
LD09018	F39SW-04 (040810)	SW6010	Arsenic	0.017	mg/l	UB	Blank Contamination	1
LD09018	F39SW-04 (040810)	SW8260	Acetone	3.8	ug/l	UB	Blank Contamination	1
LD09018	F39SW-04 (040810)	SW8260	Bromomethane	<0.50	ug/l	UJ	LCS/LCSD RPD	1
LD09018	F39SW-04 (040810)	SW8260	Methylene Chloride	0.22	ug/l	UB	Blank Contamination	1
LD09018	F39SW-04 (040810)	SW8270	Benzo(a)pyrene	<1.0	ug/l	UJ	LCS Recovery	1
LD09018	F39SW-04 (040810)	SW8270	Benzyl Butyl Phthalate	<5.0	ug/l	UJ	LCS Recovery	1
LD09018	F39SW-04 (040810)	SW8270	Phenanthrene	<1.0	ug/l	UJ	LCS Recovery	1
LD09018	F39SW-04 (040810)	SW8270	Acenaphthene	<1.0	ug/l	UJ	LCS Recovery	1
LD09018	F39SW-04 (040810)	SW8270	Pyrene	<1.0	ug/l	UJ	LCS Recovery	1
LD09018	F39SW-04 (040810)	SW8270	Benzo(a)anthracene	<1.0	ug/l	UJ	LCS Recovery	1
LD09018	F39SW-04 (040810)	SW8270	Dibenzo(a,h)anthracene	<1.0	ug/l	UJ	LCS Recovery	1
LD09018	F39SW-04 (040810)	SW8270	1,2-Benz-phenanthracene	<1.0	ug/l	UJ	LCS Recovery	1
LD09018	F39SW-04 (040810)	SW8270	Fluoranthene	<1.0	ug/l	UJ	LCS Recovery	1
LD09018	F39SW-04 (040810)	SW8270	Benzo(b)fluoranthene	<1.0	ug/l	UJ	LCS Recovery	1
LD09018	F39SW-04 (040810)	SW8270	Benzo(g,h,i)perylene	<1.0	ug/l	UJ	LCS Recovery	1

SDG	Sample ID	Method	Analyte	Result	Units	Qualifier	Reason	Dilution
LD09018	F39SW-04 (040810)	SW8270	Anthracene	<1.0	ug/l	UJ	LCS Recovery	1
LD09018	F39SW-04 (040810)	SW8270	4-Bromophenyl Phenyl Ether	<1.0	ug/l	UJ	LCS Recovery	1
LD09018	F39SW-04 (040810)	SW8270	Indeno(1,2,3-cd)pyrene	<1.0	ug/l	UJ	LCS Recovery	1
LD09018	F39SW-05 (040810)	SW6010	Arsenic	0.019	mg/l	UB	Blank Contamination	1
LD09018	F39SW-05 (040810)	SW8260	Acetone	7.5	ug/l	UB	Blank Contamination	1
LD09018	F39SW-05 (040810)	SW8260	Methylene Chloride	0.25	ug/l	UB	Blank Contamination	1
LD09018	F39SW-05 (040810)	SW8260	Bromomethane	<0.50	ug/l	UJ	LCS/LCSD RPD	1
LD09018	F39SW-05 (040810)	SW8270	1,2-Benz-phenanthracene	<1.0	ug/l	UJ	LCS Recovery	1
LD09018	F39SW-05 (040810)	SW8270	Benzyl Butyl Phthalate	<5.0	ug/l	UJ	LCS Recovery	1
LD09018	F39SW-05 (040810)	SW8270	Phenanthrene	<1.0	ug/l	UJ	LCS Recovery	1
LD09018	F39SW-05 (040810)	SW8270	Acenaphthene	<1.0	ug/l	UJ	LCS Recovery	1
LD09018	F39SW-05 (040810)	SW8270	Benzo(a)anthracene	<1.0	ug/l	UJ	LCS Recovery	1
LD09018	F39SW-05 (040810)	SW8270	Benzo(a)pyrene	<1.0	ug/l	UJ	LCS Recovery	1
LD09018	F39SW-05 (040810)	SW8270	Fluoranthene	<1.0	ug/l	UJ	LCS Recovery	1
LD09018	F39SW-05 (040810)	SW8270	Benzo(b)fluoranthene	<1.0	ug/l	UJ	LCS Recovery	1

SDG	Sample ID	Method	Analyte	Result	Units	Qualifier	Reason	Dilution
LD09018	F39SW-05 (040810)	SW8270	Indeno(1,2,3-cd)pyrene	<1.0	ug/l	UJ	LCS Recovery	1
LD09018	F39SW-05 (040810)	SW8270	Benzo(g,h,i)perylene	<1.0	ug/l	UJ	LCS Recovery	1
LD09018	F39SW-05 (040810)	SW8270	Pyrene	<1.0	ug/l	UJ	LCS Recovery	1
LD09018	F39SW-05 (040810)	SW8270	Anthracene	<1.0	ug/l	UJ	LCS Recovery	1
LD09018	F39SW-05 (040810)	SW8270	4-Bromophenyl Phenyl Ether	<1.0	ug/l	UJ	LCS Recovery	1
LD09018	F39SW-05 (040810)	SW8270	Dibenzo(a,h)anthracene	<1.0	ug/l	UJ	LCS Recovery	1
LD09018	F39SW-06 (040810)	SW6010	Arsenic	0.019	mg/l	UB	Blank Contamination	1
LD09018	F39SW-06 (040810)	SW8260	Bromomethane	<0.50	ug/l	UJ	LCS/LCSD RPD	1
LD09018	F39SW-06 (040810)	SW8260	Methylene Chloride	0.21	ug/l	UB	Blank Contamination	1
LD09018	F39SW-06 (040810)	SW8270	1,2-Benz-phenanthracene	<1.0	ug/l	UJ	LCS Recovery	1
LD09018	F39SW-06 (040810)	SW8270	Benzyl Butyl Phthalate	<5.0	ug/l	UJ	LCS Recovery	1
LD09018	F39SW-06 (040810)	SW8270	Phenanthrene	<1.0	ug/l	UJ	LCS Recovery	1
LD09018	F39SW-06 (040810)	SW8270	Acenaphthene	<1.0	ug/l	UJ	LCS Recovery	1
LD09018	F39SW-06 (040810)	SW8270	Benzo(a)anthracene	<1.0	ug/l	UJ	LCS Recovery	1
LD09018	F39SW-06 (040810)	SW8270	4-Bromophenyl Phenyl Ether	<1.0	ug/l	UJ	LCS Recovery	1

SDG	Sample ID	Method	Analyte	Result	Units	Qualifier	Reason	Dilution
LD09018	F39SW-06 (040810)	SW8270	Benzo(a)pyrene	<1.0	ug/l	UJ	LCS Recovery	1
LD09018	F39SW-06 (040810)	SW8270	Fluoranthene	<1.0	ug/l	UJ	LCS Recovery	1
LD09018	F39SW-06 (040810)	SW8270	Benzo(b)fluoranthene	<1.0	ug/l	UJ	LCS Recovery	1
LD09018	F39SW-06 (040810)	SW8270	Indeno(1,2,3-cd)pyrene	<1.0	ug/l	UJ	LCS Recovery	1
LD09018	F39SW-06 (040810)	SW8270	Benzo(g,h,i)perylene	<1.0	ug/l	UJ	LCS Recovery	1
LD09018	F39SW-06 (040810)	SW8270	Pyrene	<1.0	ug/l	UJ	LCS Recovery	1
LD09018	F39SW-06 (040810)	SW8270	Anthracene	<1.0	ug/l	UJ	LCS Recovery	1
LD09018	F39SW-06 (040810)	SW8270	Dibenzo(a,h)anthracene	<1.0	ug/l	UJ	LCS Recovery	1
LD09018	F39SW-07 (040810)	SW8260	Bromomethane	<0.50	ug/l	UJ	LCS/LCSD RPD	1
LD09018	F39SW-07 (040810)	SW8260	Acetone	7.6	ug/l	UB	Blank Contamination	1
LD09018	F39SW-07 (040810)	SW8260	Methylene Chloride	0.22	ug/l	UB	Blank Contamination	1
LD09018	F39SW-07 (040810)	SW8270	Fluoranthene	<1.0	ug/l	UJ	LCS Recovery	1
LD09018	F39SW-07 (040810)	SW8270	Phenanthrene	<1.0	ug/l	UJ	LCS Recovery	1
LD09018	F39SW-07 (040810)	SW8270	Acenaphthene	<1.0	ug/l	UJ	LCS Recovery	1
LD09018	F39SW-07 (040810)	SW8270	Benzo(a)anthracene	<1.0	ug/l	UJ	LCS Recovery	1

SDG	Sample ID	Method	Analyte	Result	Units	Qualifier	Reason	Dilution
LD09018	F39SW-07 (040810)	SW8270	Dibenzo(a,h)anthracene	<1.0	ug/l	UJ	LCS Recovery	1
LD09018	F39SW-07 (040810)	SW8270	4-Bromophenyl Phenyl Ether	<1.0	ug/l	UJ	LCS Recovery	1
LD09018	F39SW-07 (040810)	SW8270	1,2-Benz-phenanthracene	<1.0	ug/l	UJ	LCS Recovery	1
LD09018	F39SW-07 (040810)	SW8270	Benzyl Butyl Phthalate	<5.0	ug/l	UJ	LCS Recovery	1
LD09018	F39SW-07 (040810)	SW8270	Benzo(b)fluoranthene	<1.0	ug/l	UJ	LCS Recovery	1
LD09018	F39SW-07 (040810)	SW8270	Indeno(1,2,3-cd)pyrene	<1.0	ug/l	UJ	LCS Recovery	1
LD09018	F39SW-07 (040810)	SW8270	Benzo(g,h,i)perylene	<1.0	ug/l	UJ	LCS Recovery	1
LD09018	F39SW-07 (040810)	SW8270	Pyrene	<1.0	ug/l	UJ	LCS Recovery	1
LD09018	F39SW-07 (040810)	SW8270	Anthracene	<1.0	ug/l	UJ	LCS Recovery	1
LD09018	F39SW-07 (040810)	SW8270	Benzo(a)pyrene	<1.0	ug/l	UJ	LCS Recovery	1
LD09018	F39TW05 (10-15)	SW8260	Bromomethane	<0.50	ug/l	UJ	LCS/LCSD RPD	1
LD09018	F39TW05 (10-15)	SW8260	Methylene Chloride	0.24	ug/l	UB	Blank Contamination	1
LD09018	F39TW05 (20-25)	SW8260	Methylene Chloride	0.23	ug/l	UB	Blank Contamination	1
LD09018	F39TW05 (30-35)	SW8260	Methylene Chloride	0.24	ug/l	UB	Blank Contamination	1
LD09018	F39TW05 (40-45)	SW8260	Methylene Chloride	0.23	ug/l	UB	Blank Contamination	1

SDG	Sample ID	Method	Analyte	Result	Units	Qualifier	Reason	Dilution
LD09018	F39TW06 (10-15)	SW8260	Methylene Chloride	0.22	ug/l	UB	Blank Contamination	1
LD09018	F39TW06 (20-25)	SW8260	Methylene Chloride	0.37	ug/l	UB	Blank Contamination	1
LD09018	F39TW06 (30-35)	SW8260	Methylene Chloride	0.24	ug/l	UB	Blank Contamination	1
LD09018	F39TW06 (40-45)	SW8260	Bromomethane	<1.0	ug/l	UJ	LCS/LCSD RPD	2
LD09018	F39TW06 (40-45)	SW8260	Methylene Chloride	0.59	ug/l	UB	Blank Contamination	2
LD09018	F39TW06 (40-45)	SW8270	4-Chlorophenyl Phenyl Ether	<10.0	ug/l	UJ	Holding Time	1
LD09018	F39TW06 (40-45)	SW8270	bis(2-Chloroethoxy) ether	<10.0	ug/l	UJ	Holding Time	1
LD09018	F39TW06 (40-45)	SW8270	p-Nitroaniline	<20.0	ug/l	UJ	Holding Time	1
LD09018	F39TW06 (40-45)	SW8270	Benzaldehyde	<50.0	ug/l	UJ	Holding Time	1
LD09018	F39TW06 (40-45)	SW8270	4-Bromophenyl Phenyl Ether	<10.0	ug/l	UJ	Holding Time	1
LD09018	F39TW06 (40-45)	SW8270	Caprolactam	<50.0	ug/l	UJ	Holding Time	1
LD09018	F39TW06 (40-45)	SW8270	p-Chloroaniline	<10.0	ug/l	UJ	Holding Time	1
LD09018	F39TW06 (40-45)	SW8270	bis(2-chloroisopropyl) ether	<10.0	ug/l	UJ	Holding Time	1
LD09018	F39TW06 (40-45)	SW8270	Naphthalene	<10.0	ug/l	UJ	Holding Time	1
LD09018	F39TW06 (40-45)	SW8270	Acenaphthene	<10.0	ug/l	UJ	Holding Time	1

SDG	Sample ID	Method	Analyte	Result	Units	Qualifier	Reason	Dilution
LD09018	F39TW06 (40-45)	SW8270	bis(2-Chloroethoxy)methane	<10.0	ug/l	UJ	Holding Time	1
LD09018	F39TW06 (40-45)	SW8270	Di-n-butyl phthalate	<50.0	ug/l	UJ	Holding Time	1
LD09018	F39TW06 (40-45)	SW8270	Phenanthrene	<10.0	ug/l	UJ	Holding Time	1
LD09018	F39TW06 (40-45)	SW8270	Benzyl Butyl Phthalate	<50.0	ug/l	UJ	Holding Time	1
LD09018	F39TW06 (40-45)	SW8270	N-Nitrosodiphenylamine	<10.0	ug/l	UJ	Holding Time	1
LD09018	F39TW06 (40-45)	SW8270	Fluorene	<10.0	ug/l	UJ	Holding Time	1
LD09018	F39TW06 (40-45)	SW8270	Carbazole	<10.0	ug/l	UJ	Holding Time	1
LD09018	F39TW06 (40-45)	SW8270	Hexachlorocyclopentadiene	<50.0	ug/l	UJ	Holding Time	1
LD09018	F39TW06 (40-45)	SW8270	2-Nitroaniline	<20.0	ug/l	UJ	Holding Time	1
LD09018	F39TW06 (40-45)	SW8270	3,5,5-Trimethyl-2-cyclohexene-1-one	<10.0	ug/l	UJ	Holding Time	1
LD09018	F39TW06 (40-45)	SW8270	2-Methyl naphthalene	<10.0	ug/l	UJ	Holding Time	1
LD09018	F39TW06 (40-45)	SW8270	2-Chloronaphthalene	<10.0	ug/l	UJ	Holding Time	1
LD09018	F39TW06 (40-45)	SW8270	3,3'-Dichlorobenzidine	<50.0	ug/l	UJ	Holding Time	1
LD09018	F39TW06 (40-45)	SW8270	1,1'-Biphenyl	<10.0	ug/l	UJ	Holding Time	1
LD09018	F39TW06 (40-45)	SW8270	Acetophenone	<10.0	ug/l	UJ	Holding Time	1

SDG	Sample ID	Method	Analyte	Result	Units	Qualifier	Reason	Dilution
LD09018	F39TW06 (40-45)	SW8270	Nitrobenzene	<10.0	ug/l	UJ	Holding Time	1
LD09018	F39TW06 (40-45)	SW8270	3-Nitroaniline	<20.0	ug/l	UJ	Holding Time	1
LD09018	F39TW06 (40-45)	SW8270	N-Nitroso di-n-propylamine	<10.0	ug/l	UJ	Holding Time	1
LD09018	F39TW06 (40-45)	SW8270	Hexachloro-1,3-Butadiene	<10.0	ug/l	UJ	Holding Time	1
LD09018	F39TW06 (40-45)	SW8270	Benzo(g,h,i)perylene	<10.0	ug/l	UJ	Holding Time	1
LD09018	F39TW06 (40-45)	SW8270	bis(2-Ethylhexyl)phthalate	<50.0	ug/l	UJ	Holding Time	1
LD09018	F39TW06 (40-45)	SW8270	Di-n-octyl phthalate	<50.0	ug/l	UJ	Holding Time	1
LD09018	F39TW06 (40-45)	SW8270	Hexachlorobenzene	<10.0	ug/l	UJ	Holding Time	1
LD09018	F39TW06 (40-45)	SW8270	Anthracene	<10.0	ug/l	UJ	Holding Time	1
LD09018	F39TW06 (40-45)	SW8270	2,4-Dinitrotoluene	<20.0	ug/l	UJ	Holding Time	1
LD09018	F39TW06 (40-45)	SW8270	Pyrene	<10.0	ug/l	UJ	Holding Time	1
LD09018	F39TW06 (40-45)	SW8270	Dimethyl Phthalate	<50.0	ug/l	UJ	Holding Time	1
LD09018	F39TW06 (40-45)	SW8270	Diethyl phthalate	<50.0	ug/l	UJ	Holding Time	1
LD09018	F39TW06 (40-45)	SW8270	Atrazine	<10.0	ug/l	UJ	Holding Time	1
LD09018	F39TW06 (40-45)	SW8270	Hexachloroethane	<10.0	ug/l	UJ	Holding Time	1

SDG	Sample ID	Method	Analyte	Result	Units	Qualifier	Reason	Dilution
LD09018	F39TW06 (40-45)	SW8270	Dibenzo(a,h)anthracene	<10.0	ug/l	UJ	Holding Time	1
LD09018	F39TW06 (40-45)	SW8270	2,6-Dinitroluene	<20.0	ug/l	UJ	Holding Time	1
LD09018	F39TW06 (40-45)	SW8270	Dibenzofuran	<10.0	ug/l	UJ	Holding Time	1
LD09018	F39TW06 (40-45)	SW8270	Benzo(a)anthracene	<10.0	ug/l	UJ	Holding Time	1
LD09018	F39TW06 (40-45)	SW8270	Indeno(1,2,3-cd)pyrene	<10.0	ug/l	UJ	Holding Time	1
LD09018	F39TW06 (40-45)	SW8270	Benzo(a)pyrene	<10.0	ug/l	UJ	Holding Time	1
LD09018	F39TW06 (40-45)	SW8270	1,2-Benz-phenanthracene	<10.0	ug/l	UJ	Holding Time	1
LD09018	F39TW06 (40-45)	SW8270	Acenaphthylene	<10.0	ug/l	UJ	Holding Time	1
LD09018	F39TW06 (40-45)	SW8270	Benzo(k)fluoranthene	<10.0	ug/l	UJ	Holding Time	1
LD09018	F39TW06 (40-45)	SW8270	Fluoranthene	<10.0	ug/l	UJ	Holding Time	1
LD09018	F39TW06 (40-45)	SW8270	Benzo(b)fluoranthene	<10.0	ug/l	UJ	Holding Time	1
LD09018	F39TW07 (10-15)	SW8260	Methylene Chloride	0.25	ug/l	UB	Blank Contamination	1
LD09018	F39TW07 (20-25)	SW8260	Acetone	10	ug/l	UB	Blank Contamination	1
LD09018	F39TW07 (20-25)	SW8260	Bromomethane	<0.50	ug/l	UJ	LCS/LCSD RPD	1
LD09018	F39TW07 (20-25)	SW8260	Methylene Chloride	0.34	ug/l	UB	Blank Contamination	1

SDG	Sample ID	Method	Analyte	Result	Units	Qualifier	Reason	Dilution
LD09018	F39TW07 (30-35)	SW8260	Acetone	4.8	ug/l	UB	Blank Contamination	1
LD09018	F39TW07 (30-35)	SW8260	Methylene Chloride	0.23	ug/l	UB	Blank Contamination	1
LD09018	F39TW07 (40-45)	SW8260	Methylene Chloride	0.27	ug/l	UB	Blank Contamination	1
LD09018	F39TW08 (10-15)	SW8260	Acetone	6	ug/l	UB	Blank Contamination	1
LD09018	F39TW08 (10-15)	SW8260	Methylene Chloride	0.23	ug/l	UB	Blank Contamination	1
LD09018	F39TW08 (10-15)	SW8270	Phenanthrene	<1.0	ug/l	UJ	LCS Recovery	1
LD09018	F39TW08 (10-15)	SW8270	Benzyl Butyl Phthalate	<5.1	ug/l	UJ	LCS Recovery	1
LD09018	F39TW08 (10-15)	SW8270	Acenaphthene	<1.0	ug/l	UJ	LCS Recovery	1
LD09018	F39TW08 (10-15)	SW8270	Benzo(a)anthracene	<1.0	ug/l	UJ	LCS Recovery	1
LD09018	F39TW08 (10-15)	SW8270	Dibenzo(a,h)anthracene	<1.0	ug/l	UJ	LCS Recovery	1
LD09018	F39TW08 (10-15)	SW8270	Benzo(a)pyrene	<1.0	ug/l	UJ	LCS Recovery	1
LD09018	F39TW08 (10-15)	SW8270	Fluoranthene	<1.0	ug/l	UJ	LCS Recovery	1
LD09018	F39TW08 (10-15)	SW8270	Benzo(b)fluoranthene	<1.0	ug/l	UJ	LCS Recovery	1
LD09018	F39TW08 (10-15)	SW8270	Indeno(1,2,3-cd)pyrene	<1.0	ug/l	UJ	LCS Recovery	1
LD09018	F39TW08 (10-15)	SW8270	Benzo(g,h,i)perylene	<1.0	ug/l	UJ	LCS Recovery	1

SDG	Sample ID	Method	Analyte	Result	Units	Qualifier	Reason	Dilution
LD09018	F39TW08 (10-15)	SW8270	4-Bromophenyl Phenyl Ether	<1.0	ug/l	UJ	LCS Recovery	1
LD09018	F39TW08 (10-15)	SW8270	Pyrene	<1.0	ug/l	UJ	LCS Recovery	1
LD09018	F39TW08 (10-15)	SW8270	Anthracene	<1.0	ug/l	UJ	LCS Recovery	1
LD09018	F39TW08 (10-15)	SW8270	1,2-Benz-phenanthracene	<1.0	ug/l	UJ	LCS Recovery	1
LD09018	F39TW08 (20-25)	SW8260	Acetone	6.6	ug/l	UB	Blank Contamination	1
LD09018	F39TW08 (30-35)	SW8260	Acetone	8.3	ug/l	UB	Blank Contamination	1
LD09018	F39TW08 (30-35)	SW8260	Methylene Chloride	0.22	ug/l	UB	Blank Contamination	1
LD09018	F39TW08 (30-35)	SW8270	Acenaphthene	<10.0	ug/l	UJ	Holding Time	1
LD09018	F39TW08 (30-35)	SW8270	Di-n-butyl phthalate	<50.0	ug/l	UJ	Holding Time	1
LD09018	F39TW08 (30-35)	SW8270	Diethyl phthalate	<50.0	ug/l	UJ	Holding Time	1
LD09018	F39TW08 (30-35)	SW8270	Benzyl Butyl Phthalate	<50.0	ug/l	UJ	Holding Time	1
LD09018	F39TW08 (30-35)	SW8270	Phenanthrene	<10.0	ug/l	UJ	Holding Time	1
LD09018	F39TW08 (30-35)	SW8270	3,5,5-Trimethyl-2-cyclohexene-1-one	<10.0	ug/l	UJ	Holding Time	1
LD09018	F39TW08 (30-35)	SW8270	Hexachlorocyclopentadiene	<50.0	ug/l	UJ	Holding Time	1
LD09018	F39TW08 (30-35)	SW8270	4-Chlorophenyl Phenyl Ether	<10.0	ug/l	UJ	Holding Time	1

SDG	Sample ID	Method	Analyte	Result	Units	Qualifier	Reason	Dilution
LD09018	F39TW08 (30-35)	SW8270	N-Nitroso di-n-propylamine	<10.0	ug/l	UJ	Holding Time	1
LD09018	F39TW08 (30-35)	SW8270	N-Nitrosodiphenylamine	<10.0	ug/l	UJ	Holding Time	1
LD09018	F39TW08 (30-35)	SW8270	3-Nitroaniline	<20.0	ug/l	UJ	Holding Time	1
LD09018	F39TW08 (30-35)	SW8270	Hexachloroethane	<10.0	ug/l	UJ	Holding Time	1
LD09018	F39TW08 (30-35)	SW8270	Fluorene	<10.0	ug/l	UJ	Holding Time	1
LD09018	F39TW08 (30-35)	SW8270	Carbazole	<10.0	ug/l	UJ	Holding Time	1
LD09018	F39TW08 (30-35)	SW8270	Hexachloro-1,3-Butadiene	<10.0	ug/l	UJ	Holding Time	1
LD09018	F39TW08 (30-35)	SW8270	2-Nitroaniline	<20.0	ug/l	UJ	Holding Time	1
LD09018	F39TW08 (30-35)	SW8270	Naphthalene	<10.0	ug/l	UJ	Holding Time	1
LD09018	F39TW08 (30-35)	SW8270	2-Methyl naphthalene	<10.0	ug/l	UJ	Holding Time	1
LD09018	F39TW08 (30-35)	SW8270	2-Chloronaphthalene	<10.0	ug/l	UJ	Holding Time	1
LD09018	F39TW08 (30-35)	SW8270	3,3'-Dichlorobenzidine	<50.0	ug/l	UJ	Holding Time	1
LD09018	F39TW08 (30-35)	SW8270	1,1'-Biphenyl	<10.0	ug/l	UJ	Holding Time	1
LD09018	F39TW08 (30-35)	SW8270	Nitrobenzene	<10.0	ug/l	UJ	Holding Time	1
LD09018	F39TW08 (30-35)	SW8270	2,6-Dinitroluene	<20.0	ug/l	UJ	Holding Time	1

SDG	Sample ID	Method	Analyte	Result	Units	Qualifier	Reason	Dilution
LD09018	F39TW08 (30-35)	SW8270	bis(2-chloroisopropyl) ether	<10.0	ug/l	UJ	Holding Time	1
LD09018	F39TW08 (30-35)	SW8270	Acetophenone	<10.0	ug/l	UJ	Holding Time	1
LD09018	F39TW08 (30-35)	SW8270	Dimethyl Phthalate	<50.0	ug/l	UJ	Holding Time	1
LD09018	F39TW08 (30-35)	SW8270	4-Bromophenyl Phenyl Ether	<10.0	ug/l	UJ	Holding Time	1
LD09018	F39TW08 (30-35)	SW8270	Caprolactam	<50.0	ug/l	UJ	Holding Time	1
LD09018	F39TW08 (30-35)	SW8270	p-Chloroaniline	<10.0	ug/l	UJ	Holding Time	1
LD09018	F39TW08 (30-35)	SW8270	bis(2-Chloroethoxy)methane	<10.0	ug/l	UJ	Holding Time	1
LD09018	F39TW08 (30-35)	SW8270	bis(2-Chloroethoxy) ether	<10.0	ug/l	UJ	Holding Time	1
LD09018	F39TW08 (30-35)	SW8270	p-Nitroaniline	<20.0	ug/l	UJ	Holding Time	1
LD09018	F39TW08 (30-35)	SW8270	bis(2-Ethylhexyl)phthalate	<50.0	ug/l	UJ	Holding Time	1
LD09018	F39TW08 (30-35)	SW8270	Di-n-octyl phthalate	<50.0	ug/l	UJ	Holding Time	1
LD09018	F39TW08 (30-35)	SW8270	Hexachlorobenzene	<10.0	ug/l	UJ	Holding Time	1
LD09018	F39TW08 (30-35)	SW8270	Anthracene	<10.0	ug/l	UJ	Holding Time	1
LD09018	F39TW08 (30-35)	SW8270	Benzo(a)anthracene	<10.0	ug/l	UJ	Holding Time	1
LD09018	F39TW08 (30-35)	SW8270	Pyrene	<10.0	ug/l	UJ	Holding Time	1

SDG	Sample ID	Method	Analyte	Result	Units	Qualifier	Reason	Dilution
LD09018	F39TW08 (30-35)	SW8270	Benzaldehyde	<50.0	ug/l	UJ	Holding Time	1
LD09018	F39TW08 (30-35)	SW8270	Dibenzofuran	<10.0	ug/l	UJ	Holding Time	1
LD09018	F39TW08 (30-35)	SW8270	Atrazine	<10.0	ug/l	UJ	Holding Time	1
LD09018	F39TW08 (30-35)	SW8270	Benzo(g,h,i)perylene	<10.0	ug/l	UJ	Holding Time	1
LD09018	F39TW08 (30-35)	SW8270	Indeno(1,2,3-cd)pyrene	<10.0	ug/l	UJ	Holding Time	1
LD09018	F39TW08 (30-35)	SW8270	Benzo(b)fluoranthene	<10.0	ug/l	UJ	Holding Time	1
LD09018	F39TW08 (30-35)	SW8270	Fluoranthene	<10.0	ug/l	UJ	Holding Time	1
LD09018	F39TW08 (30-35)	SW8270	Benzo(k)fluoranthene	<10.0	ug/l	UJ	Holding Time	1
LD09018	F39TW08 (30-35)	SW8270	Acenaphthylene	<10.0	ug/l	UJ	Holding Time	1
LD09018	F39TW08 (30-35)	SW8270	1,2-Benz-phenanthracene	<10.0	ug/l	UJ	Holding Time	1
LD09018	F39TW08 (30-35)	SW8270	Benzo(a)pyrene	<10.0	ug/l	UJ	Holding Time	1
LD09018	F39TW08 (30-35)	SW8270	Dibenzo(a,h)anthracene	<10.0	ug/l	UJ	Holding Time	1
LD09018	F39TW08 (30-35)	SW8270	2,4-Dinitrotoluene	<20.0	ug/l	UJ	Holding Time	1
LD09018	F39TW08 (40-45)	SW8260	Bromomethane	<1.0	ug/l	UJ	LCS/LCSD RPD	2
LD09018	F39TW08 (40-45)	SW8260	Acetone	6.1	ug/l	UB	Blank Contamination	2

SDG	Sample ID	Method	Analyte	Result	Units	Qualifier	Reason	Dilution
LD09018	F39TW08 (40-45)	SW8260	Methylene Chloride	0.66	ug/l	UB	Blank Contamination	2
LD09018	F39TW08 (40-45)	SW8270	Hexachloro-1,3-Butadiene	<10.0	ug/l	R	Surrogate Recovery	1
LD09018	F39TW08 (40-45)	SW8270	N-Nitroso di-n-propylamine	<10.0	ug/l	R	Surrogate Recovery	1
LD09018	F39TW08 (40-45)	SW8270	Hexachloroethane	<10.0	ug/l	R	Surrogate Recovery	1
LD09018	F39TW08 (40-45)	SW8270	4-Chlorophenyl Phenyl Ether	<10.0	ug/l	R	Surrogate Recovery	1
LD09018	F39TW08 (40-45)	SW8270	Hexachlorocyclopentadiene	<50.0	ug/l	R	Surrogate Recovery	1
LD09018	F39TW08 (40-45)	SW8270	3,5,5-Trimethyl-2-cyclohexene-1-one	<10.0	ug/l	R	Surrogate Recovery	1
LD09018	F39TW08 (40-45)	SW8270	Acenaphthene	<10.0	ug/l	R	Surrogate Recovery	1
LD09018	F39TW08 (40-45)	SW8270	Diethyl phthalate	<50.0	ug/l	R	Surrogate Recovery	1
LD09018	F39TW08 (40-45)	SW8270	Di-n-butyl phthalate	<50.0	ug/l	R	Surrogate Recovery	1
LD09018	F39TW08 (40-45)	SW8270	Phenanthrene	<10.0	ug/l	R	Surrogate Recovery	1
LD09018	F39TW08 (40-45)	SW8270	Benzyl Butyl Phthalate	<50.0	ug/l	R	Surrogate Recovery	1
LD09018	F39TW08 (40-45)	SW8270	N-Nitrosodiphenylamine	<10.0	ug/l	R	Surrogate Recovery	1
LD09018	F39TW08 (40-45)	SW8270	Carbazole	<10.0	ug/l	R	Surrogate Recovery	1
LD09018	F39TW08 (40-45)	SW8270	2-Nitroaniline	<20.0	ug/l	R	Surrogate Recovery	1

SDG	Sample ID	Method	Analyte	Result	Units	Qualifier	Reason	Dilution
LD09018	F39TW08 (40-45)	SW8270	Naphthalene	<10.0	ug/l	R	Surrogate Recovery	1
LD09018	F39TW08 (40-45)	SW8270	2-Methyl naphthalene	<10.0	ug/l	R	Surrogate Recovery	1
LD09018	F39TW08 (40-45)	SW8270	2-Chloronaphthalene	<10.0	ug/l	R	Surrogate Recovery	1
LD09018	F39TW08 (40-45)	SW8270	3,3'-Dichlorobenzidine	<50.0	ug/l	R	Surrogate Recovery	1
LD09018	F39TW08 (40-45)	SW8270	1,1'-Biphenyl	<10.0	ug/l	R	Surrogate Recovery	1
LD09018	F39TW08 (40-45)	SW8270	Acetophenone	<10.0	ug/l	R	Surrogate Recovery	1
LD09018	F39TW08 (40-45)	SW8270	Nitrobenzene	<10.0	ug/l	R	Surrogate Recovery	1
LD09018	F39TW08 (40-45)	SW8270	3-Nitroaniline	<20.0	ug/l	R	Surrogate Recovery	1
LD09018	F39TW08 (40-45)	SW8270	2,6-Dinitroluene	<20.0	ug/l	R	Surrogate Recovery	1
LD09018	F39TW08 (40-45)	SW8270	Pyrene	<10.0	ug/l	R	Surrogate Recovery	1
LD09018	F39TW08 (40-45)	SW8270	Fluorene	<10.0	ug/l	R	Surrogate Recovery	1
LD09018	F39TW08 (40-45)	SW8270	Anthracene	<10.0	ug/l	R	Surrogate Recovery	1
LD09018	F39TW08 (40-45)	SW8270	Dibenzofuran	<10.0	ug/l	R	Surrogate Recovery	1
LD09018	F39TW08 (40-45)	SW8270	4-Bromophenyl Phenyl Ether	<10.0	ug/l	R	Surrogate Recovery	1
LD09018	F39TW08 (40-45)	SW8270	Caprolactam	<50.0	ug/l	R	Surrogate Recovery	1

SDG	Sample ID	Method	Analyte	Result	Units	Qualifier	Reason	Dilution
LD09018	F39TW08 (40-45)	SW8270	p-Chloroaniline	<10.0	ug/l	R	Surrogate Recovery	1
LD09018	F39TW08 (40-45)	SW8270	bis(2-chloroisopropyl) ether	<10.0	ug/l	R	Surrogate Recovery	1
LD09018	F39TW08 (40-45)	SW8270	bis(2-Chloroethoxy) ether	<10.0	ug/l	R	Surrogate Recovery	1
LD09018	F39TW08 (40-45)	SW8270	bis(2-Chloroethoxy)methane	<10.0	ug/l	R	Surrogate Recovery	1
LD09018	F39TW08 (40-45)	SW8270	bis(2-Ethylhexyl)phthalate	<50.0	ug/l	R	Surrogate Recovery	1
LD09018	F39TW08 (40-45)	SW8270	Benzo(a)anthracene	<10.0	ug/l	R	Surrogate Recovery	1
LD09018	F39TW08 (40-45)	SW8270	Hexachlorobenzene	<10.0	ug/l	R	Surrogate Recovery	1
LD09018	F39TW08 (40-45)	SW8270	2,4-Dinitrotoluene	<20.0	ug/l	R	Surrogate Recovery	1
LD09018	F39TW08 (40-45)	SW8270	Benzaldehyde	<50.0	ug/l	R	Surrogate Recovery	1
LD09018	F39TW08 (40-45)	SW8270	Benzo(k)fluoranthene	<10.0	ug/l	R	Surrogate Recovery	1
LD09018	F39TW08 (40-45)	SW8270	Dibenzo(a,h)anthracene	<10.0	ug/l	R	Surrogate Recovery	1
LD09018	F39TW08 (40-45)	SW8270	Benzo(a)pyrene	<10.0	ug/l	R	Surrogate Recovery	1
LD09018	F39TW08 (40-45)	SW8270	Di-n-octyl phthalate	<50.0	ug/l	R	Surrogate Recovery	1
LD09018	F39TW08 (40-45)	SW8270	Acenaphthylene	<10.0	ug/l	R	Surrogate Recovery	1
LD09018	F39TW08 (40-45)	SW8270	Dimethyl Phthalate	<50.0	ug/l	R	Surrogate Recovery	1

SDG	Sample ID	Method	Analyte	Result	Units	Qualifier	Reason	Dilution
LD09018	F39TW08 (40-45)	SW8270	Fluoranthene	<10.0	ug/l	R	Surrogate Recovery	1
LD09018	F39TW08 (40-45)	SW8270	Benzo(b)fluoranthene	<10.0	ug/l	R	Surrogate Recovery	1
LD09018	F39TW08 (40-45)	SW8270	Indeno(1,2,3-cd)pyrene	<10.0	ug/l	R	Surrogate Recovery	1
LD09018	F39TW08 (40-45)	SW8270	Benzo(g,h,i)perylene	<10.0	ug/l	R	Surrogate Recovery	1
LD09018	F39TW08 (40-45)	SW8270	Atrazine	<10.0	ug/l	R	Surrogate Recovery	1
LD09018	F39TW08 (40-45)	SW8270	p-Nitroaniline	<20.0	ug/l	R	Surrogate Recovery	1
LD09018	F39TW08 (40-45)	SW8270	1,2-Benz-phenanthracene	<10.0	ug/l	R	Surrogate Recovery	1
LD09018	TRIP BLANK (040910)	SW8260	Bromomethane	<0.50	ug/l	UJ	LCS/LCSD RPD	1
LD14020	F39TW09 (10-15)	SW8260	Methylene Chloride	0.18	ug/l	UB	Blank Contamination	1
LD14020	F39TW09 (20-25)	SW8260	Methylene Chloride	0.21	ug/l	UB	Blank Contamination	1
LD14020	F39TW09 (30-35)	SW8260	trans-1,3-Dichloropropene	<0.50	ug/l	UJ	MS Recovery	1
LD14020	F39TW09 (30-35)	SW8260	Tribromomethane	<0.50	ug/l	UJ	MS/MSD Recovery	1
LD14020	F39TW09 (30-35)	SW8260	Carbon disulfide	0.37	ug/l	J	MS/MSD RPD	1
LD14020	F39TW09 (30-35)	SW8260	Acetone	7.5	ug/l	J	MS Recovery and MS/MSD RPD	1
LD14020	F39TW09 (30-35)	SW8260	Styrene	<0.50	ug/l	UJ	MS/MSD Recovery	1

SDG	Sample ID	Method	Analyte	Result	Units	Qualifier	Reason	Dilution
LD14020	F39TW09 (30-35)	SW8260	Methylene Chloride	<0.50	ug/l	UJ	MS/MSD RPD	1
LD14020	F39TW09 (30-35)	SW8260	Bromomethane	<0.50	ug/l	UJ	MS/MSD RPD	1
LD14020	F39TW09 (30-35)	SW8270	Carbazole	<1.0	ug/l	R	Surrogate Recovery	1
LD14020	F39TW09 (30-35)	SW8270	2,6-Dinitroluene	<2.0	ug/l	R	Surrogate Recovery	1
LD14020	F39TW09 (30-35)	SW8270	Hexachloroethane	<1.0	ug/l	R	Surrogate Recovery	1
LD14020	F39TW09 (30-35)	SW8270	4-Chlorophenyl Phenyl Ether	<1.0	ug/l	R	Surrogate Recovery	1
LD14020	F39TW09 (30-35)	SW8270	Hexachlorocyclopentadiene	<5.1	ug/l	R	Surrogate Recovery	1
LD14020	F39TW09 (30-35)	SW8270	3,5,5-Trimethyl-2-cyclohexene-1-one	<1.0	ug/l	R	Surrogate Recovery	1
LD14020	F39TW09 (30-35)	SW8270	Acenaphthene	<1.0	ug/l	R	Surrogate Recovery	1
LD14020	F39TW09 (30-35)	SW8270	Diethyl phthalate	<5.1	ug/l	R	Surrogate Recovery	1
LD14020	F39TW09 (30-35)	SW8270	Di-n-butyl phthalate	<5.1	ug/l	R	Surrogate Recovery	1
LD14020	F39TW09 (30-35)	SW8270	Phenanthrene	<1.0	ug/l	R	Surrogate Recovery	1
LD14020	F39TW09 (30-35)	SW8270	Benzyl Butyl Phthalate	<5.1	ug/l	R	Surrogate Recovery	1
LD14020	F39TW09 (30-35)	SW8270	Fluorene	<1.0	ug/l	R	Surrogate Recovery	1
LD14020	F39TW09 (30-35)	SW8270	Hexachloro-1,3-Butadiene	<1.0	ug/l	R	Surrogate Recovery	1

SDG	Sample ID	Method	Analyte	Result	Units	Qualifier	Reason	Dilution
LD14020	F39TW09 (30-35)	SW8270	2-Nitroaniline	<2.0	ug/l	R	Surrogate Recovery	1
LD14020	F39TW09 (30-35)	SW8270	Naphthalene	<1.0	ug/l	R	Surrogate Recovery	1
LD14020	F39TW09 (30-35)	SW8270	2-Methyl naphthalene	<1.0	ug/l	R	Surrogate Recovery	1
LD14020	F39TW09 (30-35)	SW8270	2-Chloronaphthalene	<1.0	ug/l	R	Surrogate Recovery	1
LD14020	F39TW09 (30-35)	SW8270	3,3'-Dichlorobenzidine	<5.1	ug/l	R	Surrogate Recovery	1
LD14020	F39TW09 (30-35)	SW8270	1,1'-Biphenyl	<1.0	ug/l	R	Surrogate Recovery	1
LD14020	F39TW09 (30-35)	SW8270	Acetophenone	<1.0	ug/l	R	Surrogate Recovery	1
LD14020	F39TW09 (30-35)	SW8270	Nitrobenzene	<1.0	ug/l	R	Surrogate Recovery	1
LD14020	F39TW09 (30-35)	SW8270	3-Nitroaniline	<2.0	ug/l	R	Surrogate Recovery	1
LD14020	F39TW09 (30-35)	SW8270	Benzo(a)anthracene	<1.0	ug/l	R	Surrogate Recovery	1
LD14020	F39TW09 (30-35)	SW8270	N-Nitrosodiphenylamine	<1.0	ug/l	R	Surrogate Recovery	1
LD14020	F39TW09 (30-35)	SW8270	4-Bromophenyl Phenyl Ether	<1.0	ug/l	R	Surrogate Recovery	1
LD14020	F39TW09 (30-35)	SW8270	N-Nitroso di-n-propylamine	<1.0	ug/l	R	Surrogate Recovery	1
LD14020	F39TW09 (30-35)	SW8270	Dibenzo(a,h)anthracene	<1.0	ug/l	R	Surrogate Recovery	1
LD14020	F39TW09 (30-35)	SW8270	Benzaldehyde	<5.1	ug/l	R	Surrogate Recovery	1

SDG	Sample ID	Method	Analyte	Result	Units	Qualifier	Reason	Dilution
LD14020	F39TW09 (30-35)	SW8270	Caprolactam	<5.1	ug/l	R	Surrogate Recovery	1
LD14020	F39TW09 (30-35)	SW8270	p-Chloroaniline	<1.0	ug/l	R	Surrogate Recovery	1
LD14020	F39TW09 (30-35)	SW8270	bis(2-chloroisopropyl) ether	<1.0	ug/l	R	Surrogate Recovery	1
LD14020	F39TW09 (30-35)	SW8270	bis(2-Chloroethoxy) ether	<1.0	ug/l	R	Surrogate Recovery	1
LD14020	F39TW09 (30-35)	SW8270	bis(2-Chloroethoxy)methane	<1.0	ug/l	R	Surrogate Recovery	1
LD14020	F39TW09 (30-35)	SW8270	bis(2-Ethylhexyl)phthalate	<5.1	ug/l	R	Surrogate Recovery	1
LD14020	F39TW09 (30-35)	SW8270	Di-n-octyl phthalate	<5.1	ug/l	R	Surrogate Recovery	1
LD14020	F39TW09 (30-35)	SW8270	Hexachlorobenzene	<1.0	ug/l	R	Surrogate Recovery	1
LD14020	F39TW09 (30-35)	SW8270	Anthracene	<1.0	ug/l	R	Surrogate Recovery	1
LD14020	F39TW09 (30-35)	SW8270	Benzo(b)fluoranthene	<1.0	ug/l	R	Surrogate Recovery	1
LD14020	F39TW09 (30-35)	SW8270	p-Nitroaniline	<2.0	ug/l	R	Surrogate Recovery	1
LD14020	F39TW09 (30-35)	SW8270	Acenaphthylene	<1.0	ug/l	R	Surrogate Recovery	1
LD14020	F39TW09 (30-35)	SW8270	Benzo(a)pyrene	<1.0	ug/l	R	Surrogate Recovery	1
LD14020	F39TW09 (30-35)	SW8270	2,4-Dinitrotoluene	<2.0	ug/l	R	Surrogate Recovery	1
LD14020	F39TW09 (30-35)	SW8270	Fluoranthene	<1.0	ug/l	R	Surrogate Recovery	1

SDG	Sample ID	Method	Analyte	Result	Units	Qualifier	Reason	Dilution
LD14020	F39TW09 (30-35)	SW8270	1,2-Benz-phenanthracene	<1.0	ug/l	R	Surrogate Recovery	1
LD14020	F39TW09 (30-35)	SW8270	Indeno(1,2,3-cd)pyrene	<1.0	ug/l	R	Surrogate Recovery	1
LD14020	F39TW09 (30-35)	SW8270	Benzo(g,h,i)perylene	<1.0	ug/l	R	Surrogate Recovery	1
LD14020	F39TW09 (30-35)	SW8270	Atrazine	<1.0	ug/l	R	Surrogate Recovery	1
LD14020	F39TW09 (30-35)	SW8270	Dibenzofuran	<1.0	ug/l	R	Surrogate Recovery	1
LD14020	F39TW09 (30-35)	SW8270	Dimethyl Phthalate	<5.1	ug/l	R	Surrogate Recovery	1
LD14020	F39TW09 (30-35)	SW8270	Pyrene	<1.0	ug/l	R	Surrogate Recovery	1
LD14020	F39TW09 (30-35)	SW8270	Benzo(k)fluoranthene	<1.0	ug/l	R	Surrogate Recovery	1
LD14020	F39TW09 (40-45)	SW8260	Methylene Chloride	0.24	ug/l	UB	Blank Contamination	1
LD14020	F39TW10 (10-15)	SW8260	Methylene Chloride	0.2	ug/l	UB	Blank Contamination	1
LD14020	F39TW10 (20-25)	SW8260	Methylene Chloride	0.23	ug/l	UB	Blank Contamination	1
LD14020	F39TW10 (30-35)	SW8260	Methylene Chloride	0.2	ug/l	UB	Blank Contamination	1
LD14020	F39TW10 (40-45)	SW8260	Methylene Chloride	0.23	ug/l	UB	Blank Contamination	1
LD14020	F39TW10 (40-45)	SW8270	3,5,5-Trimethyl-2-cyclohexene-1-one	<1.0	ug/l	UJ	Holding Time	1
LD14020	F39TW10 (40-45)	SW8270	Carbazole	<1.0	ug/l	UJ	Holding Time	1

SDG	Sample ID	Method	Analyte	Result	Units	Qualifier	Reason	Dilution
LD14020	F39TW10 (40-45)	SW8270	Fluorene	<1.0	ug/l	UJ	Holding Time	1
LD14020	F39TW10 (40-45)	SW8270	N-Nitrosodiphenylamine	<1.0	ug/l	UJ	Holding Time	1
LD14020	F39TW10 (40-45)	SW8270	Benzyl Butyl Phthalate	<5.1	ug/l	UJ	Holding Time	1
LD14020	F39TW10 (40-45)	SW8270	Phenanthrene	<1.0	ug/l	UJ	Holding Time	1
LD14020	F39TW10 (40-45)	SW8270	Di-n-butyl phthalate	<5.1	ug/l	UJ	Holding Time	1
LD14020	F39TW10 (40-45)	SW8270	Acenaphthene	<1.0	ug/l	UJ	Holding Time	1
LD14020	F39TW10 (40-45)	SW8270	Hexachlorocyclopentadiene	<5.1	ug/l	UJ	Holding Time	1
LD14020	F39TW10 (40-45)	SW8270	4-Chlorophenyl Phenyl Ether	<1.0	ug/l	UJ	Holding Time	1
LD14020	F39TW10 (40-45)	SW8270	Hexachloroethane	<1.0	ug/l	UJ	Holding Time	1
LD14020	F39TW10 (40-45)	SW8270	N-Nitroso di-n-propylamine	<1.0	ug/l	UJ	Holding Time	1
LD14020	F39TW10 (40-45)	SW8270	3-Nitroaniline	<2.0	ug/l	UJ	Holding Time	1
LD14020	F39TW10 (40-45)	SW8270	2,6-Dinitroluene	<2.0	ug/l	UJ	Holding Time	1
LD14020	F39TW10 (40-45)	SW8270	Hexachloro-1,3-Butadiene	<1.0	ug/l	UJ	Holding Time	1
LD14020	F39TW10 (40-45)	SW8270	Diethyl phthalate	<5.1	ug/l	UJ	Holding Time	1
LD14020	F39TW10 (40-45)	SW8270	3,3'-Dichlorobenzidine	<5.1	ug/l	UJ	Holding Time	1

SDG	Sample ID	Method	Analyte	Result	Units	Qualifier	Reason	Dilution
LD14020	F39TW10 (40-45)	SW8270	Nitrobenzene	<1.0	ug/l	UJ	Holding Time	1
LD14020	F39TW10 (40-45)	SW8270	2,4,5-Trichlorophenol	<1.0	ug/l	UJ	Holding Time	1
LD14020	F39TW10 (40-45)	SW8270	2-Chlorophenol	<1.0	ug/l	UJ	Holding Time	1
LD14020	F39TW10 (40-45)	SW8270	2-Methylphenol	<1.0	ug/l	UJ	Holding Time	1
LD14020	F39TW10 (40-45)	SW8270	m & p Cresol	<2.0	ug/l	UJ	Holding Time	1
LD14020	F39TW10 (40-45)	SW8270	Acetophenone	<1.0	ug/l	UJ	Holding Time	1
LD14020	F39TW10 (40-45)	SW8270	4-chloro-3-methylphenol	<1.0	ug/l	UJ	Holding Time	1
LD14020	F39TW10 (40-45)	SW8270	Pentachlorophenol	<5.1	ug/l	UJ	Holding Time	1
LD14020	F39TW10 (40-45)	SW8270	2-Chloronaphthalene	<1.0	ug/l	UJ	Holding Time	1
LD14020	F39TW10 (40-45)	SW8270	2-Methyl naphthalene	<1.0	ug/l	UJ	Holding Time	1
LD14020	F39TW10 (40-45)	SW8270	Naphthalene	<1.0	ug/l	UJ	Holding Time	1
LD14020	F39TW10 (40-45)	SW8270	2-Nitrophenol	<2.0	ug/l	UJ	Holding Time	1
LD14020	F39TW10 (40-45)	SW8270	2-Nitroaniline	<2.0	ug/l	UJ	Holding Time	1
LD14020	F39TW10 (40-45)	SW8270	2,4,6-Trichlorophenol	<1.0	ug/l	UJ	Holding Time	1
LD14020	F39TW10 (40-45)	SW8270	1,1'-Biphenyl	<1.0	ug/l	UJ	Holding Time	1

SDG	Sample ID	Method	Analyte	Result	Units	Qualifier	Reason	Dilution
LD14020	F39TW10 (40-45)	SW8270	p-Chloroaniline	<1.0	ug/l	UJ	Holding Time	1
LD14020	F39TW10 (40-45)	SW8270	Anthracene	<1.0	ug/l	UJ	Holding Time	1
LD14020	F39TW10 (40-45)	SW8270	Hexachlorobenzene	<1.0	ug/l	UJ	Holding Time	1
LD14020	F39TW10 (40-45)	SW8270	Di-n-octyl phthalate	<5.1	ug/l	UJ	Holding Time	1
LD14020	F39TW10 (40-45)	SW8270	bis(2-Ethylhexyl)phthalate	<5.1	ug/l	UJ	Holding Time	1
LD14020	F39TW10 (40-45)	SW8270	bis(2-Chloroethoxy)methane	<1.0	ug/l	UJ	Holding Time	1
LD14020	F39TW10 (40-45)	SW8270	2,4-Dichlorophenol	<1.0	ug/l	UJ	Holding Time	1
LD14020	F39TW10 (40-45)	SW8270	Phenol	<1.0	ug/l	UJ	Holding Time	1
LD14020	F39TW10 (40-45)	SW8270	Caprolactam	<5.1	ug/l	UJ	Holding Time	1
LD14020	F39TW10 (40-45)	SW8270	2,4-Dimethylphenol	<1.0	ug/l	UJ	Holding Time	1
LD14020	F39TW10 (40-45)	SW8270	4-Bromophenyl Phenyl Ether	<1.0	ug/l	UJ	Holding Time	1
LD14020	F39TW10 (40-45)	SW8270	4-Nitrophenol	<5.1	ug/l	UJ	Holding Time	1
LD14020	F39TW10 (40-45)	SW8270	p-Nitroaniline	<2.0	ug/l	UJ	Holding Time	1
LD14020	F39TW10 (40-45)	SW8270	bis(2-chloroisopropyl) ether	<1.0	ug/l	UJ	Holding Time	1
LD14020	F39TW10 (40-45)	SW8270	Benzo(a)anthracene	<1.0	ug/l	UJ	Holding Time	1

SDG	Sample ID	Method	Analyte	Result	Units	Qualifier	Reason	Dilution
LD14020	F39TW10 (40-45)	SW8270	bis(2-Chloroethoxy) ether	<1.0	ug/l	UJ	Holding Time	1
LD14020	F39TW10 (40-45)	SW8270	Benzo(k)fluoranthene	<1.0	ug/l	UJ	Holding Time	1
LD14020	F39TW10 (40-45)	SW8270	2,4-Dinitrophenol	<5.1	ug/l	UJ	Holding Time	1
LD14020	F39TW10 (40-45)	SW8270	Benzo(a)pyrene	<1.0	ug/l	UJ	Holding Time	1
LD14020	F39TW10 (40-45)	SW8270	Benzaldehyde	<5.1	ug/l	UJ	Holding Time	1
LD14020	F39TW10 (40-45)	SW8270	1,2-Benz-phenanthracene	<1.0	ug/l	UJ	Holding Time	1
LD14020	F39TW10 (40-45)	SW8270	2,4-Dinitrotoluene	<2.0	ug/l	UJ	Holding Time	1
LD14020	F39TW10 (40-45)	SW8270	Acenaphthylene	<1.0	ug/l	UJ	Holding Time	1
LD14020	F39TW10 (40-45)	SW8270	4,6-Dinitro-2-methylphenol	<5.1	ug/l	UJ	Holding Time	1
LD14020	F39TW10 (40-45)	SW8270	Fluoranthene	<1.0	ug/l	UJ	Holding Time	1
LD14020	F39TW10 (40-45)	SW8270	Benzo(b)fluoranthene	<1.0	ug/l	UJ	Holding Time	1
LD14020	F39TW10 (40-45)	SW8270	Indeno(1,2,3-cd)pyrene	<1.0	ug/l	UJ	Holding Time	1
LD14020	F39TW10 (40-45)	SW8270	Benzo(g,h,i)perylene	<1.0	ug/l	UJ	Holding Time	1
LD14020	F39TW10 (40-45)	SW8270	Atrazine	<1.0	ug/l	UJ	Holding Time	1
LD14020	F39TW10 (40-45)	SW8270	Dibenzofuran	<1.0	ug/l	UJ	Holding Time	1

SDG	Sample ID	Method	Analyte	Result	Units	Qualifier	Reason	Dilution
LD14020	F39TW10 (40-45)	SW8270	Dimethyl Phthalate	<5.1	ug/l	UJ	Holding Time	1
LD14020	F39TW10 (40-45)	SW8270	Pyrene	<1.0	ug/l	UJ	Holding Time	1
LD14020	F39TW10 (40-45)	SW8270	Dibenzo(a,h)anthracene	<1.0	ug/l	UJ	Holding Time	1
LD14020	F39TW11 (10-15)	SW8260	Acetone	6.7	ug/l	UB	Blank Contamination	1
LD14020	F39TW11 (10-15)	SW8260	Methylene Chloride	0.22	ug/l	UB	Blank Contamination	1
LD14020	F39TW11 (10-15)	SW8260	Carbon disulfide	0.34	ug/l	UB	Blank Contamination	1
LD14020	F39TW11 (20-25)	SW8260	Carbon disulfide	1.5	ug/l	UB	Blank Contamination	1
LD14020	F39TW11 (20-25)	SW8260	Methylene Chloride	0.2	ug/l	UB	Blank Contamination	1
LD14020	F39TW11 (20-25)	SW8270	2-Nitroaniline	<2.0	ug/l	UJ	MS/MSD Recovery	1
LD14020	F39TW11 (20-25)	SW8270	3,5,5-Trimethyl-2-cyclohexene-1-one	<1.0	ug/l	UJ	MS/MSD Recovery	1
LD14020	F39TW11 (20-25)	SW8270	Diethyl phthalate	<5.1	ug/l	UJ	MS/MSD Recovery	1
LD14020	F39TW11 (20-25)	SW8270	Di-n-butyl phthalate	<5.1	ug/l	UJ	MS/MSD Recovery	1
LD14020	F39TW11 (20-25)	SW8270	Phenanthrene	<1.0	ug/l	UJ	MS/MSD Recovery	1
LD14020	F39TW11 (20-25)	SW8270	Benzyl Butyl Phthalate	<5.1	ug/l	UJ	MS/MSD Recovery	1
LD14020	F39TW11 (20-25)	SW8270	N-Nitrosodiphenylamine	<1.0	ug/l	R	MS/MSD Recovery	1

SDG	Sample ID	Method	Analyte	Result	Units	Qualifier	Reason	Dilution
LD14020	F39TW11 (20-25)	SW8270	Fluorene	<1.0	ug/l	UJ	MS/MSD Recovery	1
LD14020	F39TW11 (20-25)	SW8270	Hexachloro-1,3-Butadiene	<1.0	ug/l	UJ	MS Recovery	1
LD14020	F39TW11 (20-25)	SW8270	Naphthalene	<1.0	ug/l	UJ	MS/MSD Recovery	1
LD14020	F39TW11 (20-25)	SW8270	2-Methyl naphthalene	<1.0	ug/l	UJ	MS/MSD Recovery	1
LD14020	F39TW11 (20-25)	SW8270	2-Chloronaphthalene	<1.0	ug/l	UJ	MSD Recovery and MS/MSD RPD	1
LD14020	F39TW11 (20-25)	SW8270	2,4,5-Trichlorophenol	<1.0	ug/l	UJ	MS/MSD Recovery	1
LD14020	F39TW11 (20-25)	SW8270	Nitrobenzene	<1.0	ug/l	UJ	MS/MSD Recovery	1
LD14020	F39TW11 (20-25)	SW8270	3-Nitroaniline	<2.0	ug/l	R	MS/MSD Recovery	1
LD14020	F39TW11 (20-25)	SW8270	2,6-Dinitroluene	<2.0	ug/l	UJ	MS/MSD Recovery	1
LD14020	F39TW11 (20-25)	SW8270	Hexachloroethane	<1.0	ug/l	UJ	MS/MSD Recovery	1
LD14020	F39TW11 (20-25)	SW8270	Carbazole	<1.0	ug/l	UJ	MS/MSD Recovery	1
LD14020	F39TW11 (20-25)	SW8270	Dibenzofuran	<1.0	ug/l	UJ	MS/MSD Recovery	1
LD14020	F39TW11 (20-25)	SW8270	4-Bromophenyl Phenyl Ether	<1.0	ug/l	UJ	MS/MSD Recovery	1
LD14020	F39TW11 (20-25)	SW8270	p-Chloroaniline	<1.0	ug/l	R	MS/MSD Recovery	1
LD14020	F39TW11 (20-25)	SW8270	bis(2-Chloroethoxy)methane	<1.0	ug/l	UJ	MS/MSD Recovery	1

SDG	Sample ID	Method	Analyte	Result	Units	Qualifier	Reason	Dilution
LD14020	F39TW11 (20-25)	SW8270	bis(2-Ethylhexyl)phthalate	<5.1	ug/l	R	MS Recovery	1
LD14020	F39TW11 (20-25)	SW8270	Di-n-octyl phthalate	<5.1	ug/l	UJ	MS/MSD Recovery	1
LD14020	F39TW11 (20-25)	SW8270	Hexachlorobenzene	<1.0	ug/l	UJ	MS/MSD Recovery	1
LD14020	F39TW11 (20-25)	SW8270	Anthracene	<1.0	ug/l	UJ	MS/MSD Recovery	1
LD14020	F39TW11 (20-25)	SW8270	2,4-Dinitrotoluene	<2.0	ug/l	UJ	MS/MSD Recovery	1
LD14020	F39TW11 (20-25)	SW8270	p-Nitroaniline	<2.0	ug/l	R	MS/MSD Recovery	1
LD14020	F39TW11 (20-25)	SW8270	Dimethyl Phthalate	<5.1	ug/l	UJ	MS/MSD Recovery	1
LD14020	F39TW11 (20-25)	SW8270	Benzo(g,h,i)perylene	<1.0	ug/l	UJ	MS/MSD Recovery	1
LD14020	F39TW11 (20-25)	SW8270	Indeno(1,2,3-cd)pyrene	<1.0	ug/l	UJ	MS/MSD Recovery	1
LD14020	F39TW11 (20-25)	SW8270	Fluoranthene	<1.0	ug/l	UJ	MS/MSD Recovery	1
LD14020	F39TW11 (20-25)	SW8270	1,2-Benz-phenanthracene	<1.0	ug/l	UJ	MS/MSD Recovery	1
LD14020	F39TW11 (20-25)	SW8270	Dibenzo(a,h)anthracene	<1.0	ug/l	UJ	MS/MSD Recovery	1
LD14020	F39TW11 (20-25)	SW8270	Benzo(a)anthracene	<1.0	ug/l	UJ	MS/MSD Recovery	1
LD14020	F39TW11 (20-25)	SW8270	4-Chlorophenyl Phenyl Ether	<1.0	ug/l	UJ	MS Recovery	1
LD14020	F39TW11 (20-25)	SW8270	4-chloro-3-methylphenol	<1.0	ug/l	UJ	MS/MSD Recovery	1

SDG	Sample ID	Method	Analyte	Result	Units	Qualifier	Reason	Dilution
LD14020	F39TW11 (20-25)	SW8270	Pyrene	<1.0	ug/l	UJ	MS/MSD Recovery	1
LD14020	F39TW11 (30-35)	SW8260	Acetone	2.9	ug/l	UB	Blank Contamination	1
LD14020	F39TW11 (30-35)	SW8260	Methylene Chloride	0.19	ug/l	UB	Blank Contamination	1
LD14020	F39TW11 (30-35)	SW8260	Carbon disulfide	0.46	ug/l	UB	Blank Contamination	1
LD14020	F39TW11 (40-45)	SW8260	Vinyl Chloride	0.6	ug/l	UB	Blank Contamination	1
LD14020	F39TW11 (40-45)	SW8260	Methylene Chloride	0.2	ug/l	UB	Blank Contamination	1
LD14020	F39TW11 (40-45)	SW8260	Carbon disulfide	0.4	ug/l	UB	Blank Contamination	1
LD14020	F39TW11 (40-45)	SW8270	2,6-Dinitroluene	<2.0	ug/l	UJ	Holding Time	1
LD14020	F39TW11 (40-45)	SW8270	Fluorene	<1.0	ug/l	UJ	Holding Time	1
LD14020	F39TW11 (40-45)	SW8270	N-Nitrosodiphenylamine	<1.0	ug/l	UJ	Holding Time	1
LD14020	F39TW11 (40-45)	SW8270	Benzyl Butyl Phthalate	<5.1	ug/l	UJ	Holding Time	1
LD14020	F39TW11 (40-45)	SW8270	Phenanthrene	<1.0	ug/l	UJ	Holding Time	1
LD14020	F39TW11 (40-45)	SW8270	Di-n-butyl phthalate	<5.1	ug/l	UJ	Holding Time	1
LD14020	F39TW11 (40-45)	SW8270	Diethyl phthalate	<5.1	ug/l	UJ	Holding Time	1
LD14020	F39TW11 (40-45)	SW8270	Acenaphthene	<1.0	ug/l	UJ	Holding Time	1

SDG	Sample ID	Method	Analyte	Result	Units	Qualifier	Reason	Dilution
LD14020	F39TW11 (40-45)	SW8270	Hexachlorocyclopentadiene	<5.1	ug/l	UJ	Holding Time	1
LD14020	F39TW11 (40-45)	SW8270	Carbazole	<1.0	ug/l	UJ	Holding Time	1
LD14020	F39TW11 (40-45)	SW8270	4-Chlorophenyl Phenyl Ether	<1.0	ug/l	UJ	Holding Time	1
LD14020	F39TW11 (40-45)	SW8270	Hexachloroethane	<1.0	ug/l	UJ	Holding Time	1
LD14020	F39TW11 (40-45)	SW8270	2,4,5-Trichlorophenol	<1.0	ug/l	UJ	Holding Time	1
LD14020	F39TW11 (40-45)	SW8270	N-Nitroso di-n-propylamine	<1.0	ug/l	UJ	Holding Time	1
LD14020	F39TW11 (40-45)	SW8270	3,5,5-Trimethyl-2-cyclohexene-1-one	<1.0	ug/l	UJ	Holding Time	1
LD14020	F39TW11 (40-45)	SW8270	2-Chloronaphthalene	<1.0	ug/l	UJ	Holding Time	1
LD14020	F39TW11 (40-45)	SW8270	4-chloro-3-methylphenol	<1.0	ug/l	UJ	Holding Time	1
LD14020	F39TW11 (40-45)	SW8270	3-Nitroaniline	<2.0	ug/l	UJ	Holding Time	1
LD14020	F39TW11 (40-45)	SW8270	Nitrobenzene	<1.0	ug/l	UJ	Holding Time	1
LD14020	F39TW11 (40-45)	SW8270	Acetophenone	<1.0	ug/l	UJ	Holding Time	1
LD14020	F39TW11 (40-45)	SW8270	1,2-Benz-phenanthracene	<1.0	ug/l	UJ	Holding Time	1
LD14020	F39TW11 (40-45)	SW8270	2-Chlorophenol	<1.0	ug/l	UJ	Holding Time	1
LD14020	F39TW11 (40-45)	SW8270	2-Methylphenol	<1.0	ug/l	UJ	Holding Time	1

SDG	Sample ID	Method	Analyte	Result	Units	Qualifier	Reason	Dilution
LD14020	F39TW11 (40-45)	SW8270	3,3'-Dichlorobenzidine	<5.1	ug/l	UJ	Holding Time	1
LD14020	F39TW11 (40-45)	SW8270	Hexachloro-1,3-Butadiene	<1.0	ug/l	UJ	Holding Time	1
LD14020	F39TW11 (40-45)	SW8270	2-Methyl naphthalene	<1.0	ug/l	UJ	Holding Time	1
LD14020	F39TW11 (40-45)	SW8270	Naphthalene	<1.0	ug/l	UJ	Holding Time	1
LD14020	F39TW11 (40-45)	SW8270	2-Nitrophenol	<2.0	ug/l	UJ	Holding Time	1
LD14020	F39TW11 (40-45)	SW8270	2-Nitroaniline	<2.0	ug/l	UJ	Holding Time	1
LD14020	F39TW11 (40-45)	SW8270	2,4,6-Trichlorophenol	<1.0	ug/l	UJ	Holding Time	1
LD14020	F39TW11 (40-45)	SW8270	Pentachlorophenol	<5.1	ug/l	UJ	Holding Time	1
LD14020	F39TW11 (40-45)	SW8270	1,1'-Biphenyl	<1.0	ug/l	UJ	Holding Time	1
LD14020	F39TW11 (40-45)	SW8270	2,4-Dimethylphenol	<1.0	ug/l	UJ	Holding Time	1
LD14020	F39TW11 (40-45)	SW8270	Benzo(a)anthracene	<1.0	ug/l	UJ	Holding Time	1
LD14020	F39TW11 (40-45)	SW8270	bis(2-Chloroethoxy)methane	<1.0	ug/l	UJ	Holding Time	1
LD14020	F39TW11 (40-45)	SW8270	bis(2-Chloroethoxy) ether	<1.0	ug/l	UJ	Holding Time	1
LD14020	F39TW11 (40-45)	SW8270	Phenol	<1.0	ug/l	UJ	Holding Time	1
LD14020	F39TW11 (40-45)	SW8270	bis(2-chloroisopropyl) ether	<1.0	ug/l	UJ	Holding Time	1

SDG	Sample ID	Method	Analyte	Result	Units	Qualifier	Reason	Dilution
LD14020	F39TW11 (40-45)	SW8270	Di-n-octyl phthalate	<5.1	ug/l	UJ	Holding Time	1
LD14020	F39TW11 (40-45)	SW8270	m & p Cresol	<2.0	ug/l	UJ	Holding Time	1
LD14020	F39TW11 (40-45)	SW8270	Hexachlorobenzene	<1.0	ug/l	UJ	Holding Time	1
LD14020	F39TW11 (40-45)	SW8270	Caprolactam	<5.1	ug/l	UJ	Holding Time	1
LD14020	F39TW11 (40-45)	SW8270	4-Bromophenyl Phenyl Ether	<1.0	ug/l	UJ	Holding Time	1
LD14020	F39TW11 (40-45)	SW8270	Benzaldehyde	<5.1	ug/l	UJ	Holding Time	1
LD14020	F39TW11 (40-45)	SW8270	4-Nitrophenol	<5.1	ug/l	UJ	Holding Time	1
LD14020	F39TW11 (40-45)	SW8270	p-Nitroaniline	<2.0	ug/l	UJ	Holding Time	1
LD14020	F39TW11 (40-45)	SW8270	2,4-Dinitrophenol	<5.1	ug/l	UJ	Holding Time	1
LD14020	F39TW11 (40-45)	SW8270	p-Chloroaniline	<1.0	ug/l	UJ	Holding Time	1
LD14020	F39TW11 (40-45)	SW8270	Indeno(1,2,3-cd)pyrene	<1.0	ug/l	UJ	Holding Time	1
LD14020	F39TW11 (40-45)	SW8270	Dibenzo(a,h)anthracene	<1.0	ug/l	UJ	Holding Time	1
LD14020	F39TW11 (40-45)	SW8270	4,6-Dinitro-2-methylphenol	<5.1	ug/l	UJ	Holding Time	1
LD14020	F39TW11 (40-45)	SW8270	Benzo(a)pyrene	<1.0	ug/l	UJ	Holding Time	1
LD14020	F39TW11 (40-45)	SW8270	Acenaphthylene	<1.0	ug/l	UJ	Holding Time	1

SDG	Sample ID	Method	Analyte	Result	Units	Qualifier	Reason	Dilution
LD14020	F39TW11 (40-45)	SW8270	Benzo(k)fluoranthene	<1.0	ug/l	UJ	Holding Time	1
LD14020	F39TW11 (40-45)	SW8270	bis(2-Ethylhexyl)phthalate	<5.1	ug/l	UJ	Holding Time	1
LD14020	F39TW11 (40-45)	SW8270	Benzo(b)fluoranthene	<1.0	ug/l	UJ	Holding Time	1
LD14020	F39TW11 (40-45)	SW8270	Anthracene	<1.0	ug/l	UJ	Holding Time	1
LD14020	F39TW11 (40-45)	SW8270	Benzo(g,h,i)perylene	<1.0	ug/l	UJ	Holding Time	1
LD14020	F39TW11 (40-45)	SW8270	Atrazine	<1.0	ug/l	UJ	Holding Time	1
LD14020	F39TW11 (40-45)	SW8270	Dibenzofuran	<1.0	ug/l	UJ	Holding Time	1
LD14020	F39TW11 (40-45)	SW8270	Dimethyl Phthalate	<5.1	ug/l	UJ	Holding Time	1
LD14020	F39TW11 (40-45)	SW8270	Pyrene	<1.0	ug/l	UJ	Holding Time	1
LD14020	F39TW11 (40-45)	SW8270	2,4-Dinitrotoluene	<2.0	ug/l	UJ	Holding Time	1
LD14020	F39TW11 (40-45)	SW8270	2,4-Dichlorophenol	<1.0	ug/l	UJ	Holding Time	1
LD14020	F39TW11 (40-45)	SW8270	Fluoranthene	<1.0	ug/l	UJ	Holding Time	1
LD14020	F39TW12 (10-15)	SW8260	Acetone	3.6	ug/l	UB	Blank Contamination	1
LD14020	F39TW12 (10-15)	SW8260	Carbon disulfide	0.24	ug/l	UB	Blank Contamination	1
LD14020	F39TW12 (20-25)	SW8260	Acetone	4.8	ug/l	UB	Blank Contamination	1

SDG	Sample ID	Method	Analyte	Result	Units	Qualifier	Reason	Dilution
LD14020	F39TW12 (20-25)	SW8260	Carbon disulfide	0.45	ug/l	UB	Blank Contamination	1
LD14020	F39TW12 (30-35)	SW8260	Acetone	3.5	ug/l	UB	Blank Contamination	1
LD14020	F39TW12 (30-35)	SW8260	Carbon disulfide	0.19	ug/l	UB	Blank Contamination	1
LD14020	F39TW12 (40-45)	SW8260	Acetone	7.2	ug/l	UB	Blank Contamination	1
LD14020	F39TW12 (40-45)	SW8260	Carbon disulfide	0.19	ug/l	UB	Blank Contamination	1
LD14020	F39TW12 (40-45)	SW8270	Acenaphthene	<1.0	ug/l	R	Surrogate Recovery	1
LD14020	F39TW12 (40-45)	SW8270	Hexachloro-1,3-Butadiene	<1.0	ug/l	R	Surrogate Recovery	1
LD14020	F39TW12 (40-45)	SW8270	Carbazole	<1.0	ug/l	R	Surrogate Recovery	1
LD14020	F39TW12 (40-45)	SW8270	Fluorene	<1.0	ug/l	R	Surrogate Recovery	1
LD14020	F39TW12 (40-45)	SW8270	N-Nitrosodiphenylamine	<1.0	ug/l	R	Surrogate Recovery	1
LD14020	F39TW12 (40-45)	SW8270	Benzyl Butyl Phthalate	<5.1	ug/l	R	Surrogate Recovery	1
LD14020	F39TW12 (40-45)	SW8270	Phenanthrene	<1.0	ug/l	R	Surrogate Recovery	1
LD14020	F39TW12 (40-45)	SW8270	Diethyl phthalate	<5.1	ug/l	R	Surrogate Recovery	1
LD14020	F39TW12 (40-45)	SW8270	bis(2-Ethylhexyl)phthalate	<5.1	ug/l	R	Surrogate Recovery	1
LD14020	F39TW12 (40-45)	SW8270	3,5,5-Trimethyl-2-cyclohexene-1-one	<1.0	ug/l	R	Surrogate Recovery	1

SDG	Sample ID	Method	Analyte	Result	Units	Qualifier	Reason	Dilution
LD14020	F39TW12 (40-45)	SW8270	Hexachlorocyclopentadiene	<5.1	ug/l	R	Surrogate Recovery	1
LD14020	F39TW12 (40-45)	SW8270	4-Chlorophenyl Phenyl Ether	<1.0	ug/l	R	Surrogate Recovery	1
LD14020	F39TW12 (40-45)	SW8270	Hexachloroethane	<1.0	ug/l	R	Surrogate Recovery	1
LD14020	F39TW12 (40-45)	SW8270	N-Nitroso di-n-propylamine	<1.0	ug/l	R	Surrogate Recovery	1
LD14020	F39TW12 (40-45)	SW8270	2,6-Dinitroluene	<2.0	ug/l	R	Surrogate Recovery	1
LD14020	F39TW12 (40-45)	SW8270	Di-n-butyl phthalate	<5.1	ug/l	R	Surrogate Recovery	1
LD14020	F39TW12 (40-45)	SW8270	3,3'-Dichlorobenzidine	<5.1	ug/l	R	Surrogate Recovery	1
LD14020	F39TW12 (40-45)	SW8270	3-Nitroaniline	<2.0	ug/l	R	Surrogate Recovery	1
LD14020	F39TW12 (40-45)	SW8270	Nitrobenzene	<1.0	ug/l	R	Surrogate Recovery	1
LD14020	F39TW12 (40-45)	SW8270	Acetophenone	<1.0	ug/l	R	Surrogate Recovery	1
LD14020	F39TW12 (40-45)	SW8270	2,4,5-Trichlorophenol	<1.0	ug/l	UJ	Holding Time	1
LD14020	F39TW12 (40-45)	SW8270	2-Chlorophenol	<1.0	ug/l	UJ	Holding Time	1
LD14020	F39TW12 (40-45)	SW8270	Pentachlorophenol	<5.1	ug/l	UJ	Holding Time	1
LD14020	F39TW12 (40-45)	SW8270	1,1'-Biphenyl	<1.0	ug/l	R	Surrogate Recovery	1
LD14020	F39TW12 (40-45)	SW8270	2,4,6-Trichlorophenol	<1.0	ug/l	UJ	Holding Time	1

SDG	Sample ID	Method	Analyte	Result	Units	Qualifier	Reason	Dilution
LD14020	F39TW12 (40-45)	SW8270	2-Chloronaphthalene	<1.0	ug/l	R	Surrogate Recovery	1
LD14020	F39TW12 (40-45)	SW8270	2-Methyl naphthalene	<1.0	ug/l	R	Surrogate Recovery	1
LD14020	F39TW12 (40-45)	SW8270	Naphthalene	<1.0	ug/l	R	Surrogate Recovery	1
LD14020	F39TW12 (40-45)	SW8270	2-Nitrophenol	<2.0	ug/l	UJ	Holding Time	1
LD14020	F39TW12 (40-45)	SW8270	2-Nitroaniline	<2.0	ug/l	R	Surrogate Recovery	1
LD14020	F39TW12 (40-45)	SW8270	4-chloro-3-methylphenol	<1.0	ug/l	UJ	Holding Time	1
LD14020	F39TW12 (40-45)	SW8270	2-Methylphenol	<1.0	ug/l	UJ	Holding Time	1
LD14020	F39TW12 (40-45)	SW8270	m & p Cresol	<2.0	ug/l	UJ	Holding Time	1
LD14020	F39TW12 (40-45)	SW8270	Anthracene	<1.0	ug/l	R	Surrogate Recovery	1
LD14020	F39TW12 (40-45)	SW8270	Di-n-octyl phthalate	<5.1	ug/l	R	Surrogate Recovery	1
LD14020	F39TW12 (40-45)	SW8270	bis(2-Chloroethoxy)methane	<1.0	ug/l	R	Surrogate Recovery	1
LD14020	F39TW12 (40-45)	SW8270	bis(2-Chloroethoxy) ether	<1.0	ug/l	R	Surrogate Recovery	1
LD14020	F39TW12 (40-45)	SW8270	Phenol	<1.0	ug/l	UJ	Holding Time	1
LD14020	F39TW12 (40-45)	SW8270	Hexachlorobenzene	<1.0	ug/l	R	Surrogate Recovery	1
LD14020	F39TW12 (40-45)	SW8270	p-Chloroaniline	<1.0	ug/l	R	Surrogate Recovery	1

SDG	Sample ID	Method	Analyte	Result	Units	Qualifier	Reason	Dilution
LD14020	F39TW12 (40-45)	SW8270	Pyrene	<1.0	ug/l	R	Surrogate Recovery	1
LD14020	F39TW12 (40-45)	SW8270	2,4-Dimethylphenol	<1.0	ug/l	UJ	Holding Time	1
LD14020	F39TW12 (40-45)	SW8270	Caprolactam	<5.1	ug/l	R	Surrogate Recovery	1
LD14020	F39TW12 (40-45)	SW8270	4-Bromophenyl Phenyl Ether	<1.0	ug/l	R	Surrogate Recovery	1
LD14020	F39TW12 (40-45)	SW8270	Benzaldehyde	<5.1	ug/l	R	Surrogate Recovery	1
LD14020	F39TW12 (40-45)	SW8270	4-Nitrophenol	<5.1	ug/l	UJ	Holding Time	1
LD14020	F39TW12 (40-45)	SW8270	p-Nitroaniline	<2.0	ug/l	R	Surrogate Recovery	1
LD14020	F39TW12 (40-45)	SW8270	bis(2-chloroisopropyl) ether	<1.0	ug/l	R	Surrogate Recovery	1
LD14020	F39TW12 (40-45)	SW8270	Benzo(b)fluoranthene	<1.0	ug/l	R	Surrogate Recovery	1
LD14020	F39TW12 (40-45)	SW8270	Dibenzo(a,h)anthracene	<1.0	ug/l	R	Surrogate Recovery	1
LD14020	F39TW12 (40-45)	SW8270	4,6-Dinitro-2-methylphenol	<5.1	ug/l	UJ	Holding Time	1
LD14020	F39TW12 (40-45)	SW8270	2,4-Dinitrophenol	<5.1	ug/l	UJ	Holding Time	1
LD14020	F39TW12 (40-45)	SW8270	Benzo(a)pyrene	<1.0	ug/l	R	Surrogate Recovery	1
LD14020	F39TW12 (40-45)	SW8270	1,2-Benz-phenanthracene	<1.0	ug/l	R	Surrogate Recovery	1
LD14020	F39TW12 (40-45)	SW8270	Acenaphthylene	<1.0	ug/l	R	Surrogate Recovery	1

SDG	Sample ID	Method	Analyte	Result	Units	Qualifier	Reason	Dilution
LD14020	F39TW12 (40-45)	SW8270	2,4-Dichlorophenol	<1.0	ug/l	UJ	Holding Time	1
LD14020	F39TW12 (40-45)	SW8270	Fluoranthene	<1.0	ug/l	R	Surrogate Recovery	1
LD14020	F39TW12 (40-45)	SW8270	2,4-Dinitrotoluene	<2.0	ug/l	R	Surrogate Recovery	1
LD14020	F39TW12 (40-45)	SW8270	Indeno(1,2,3-cd)pyrene	<1.0	ug/l	R	Surrogate Recovery	1
LD14020	F39TW12 (40-45)	SW8270	Benzo(g,h,i)perylene	<1.0	ug/l	R	Surrogate Recovery	1
LD14020	F39TW12 (40-45)	SW8270	Atrazine	<1.0	ug/l	R	Surrogate Recovery	1
LD14020	F39TW12 (40-45)	SW8270	Dibenzofuran	<1.0	ug/l	R	Surrogate Recovery	1
LD14020	F39TW12 (40-45)	SW8270	Dimethyl Phthalate	<5.1	ug/l	R	Surrogate Recovery	1
LD14020	F39TW12 (40-45)	SW8270	Benzo(a)anthracene	<1.0	ug/l	R	Surrogate Recovery	1
LD14020	F39TW12 (40-45)	SW8270	Benzo(k)fluoranthene	<1.0	ug/l	R	Surrogate Recovery	1

HUNTER STEWART
ELECTRONIC VALIDATION REVIEW REPORT
SDGs: LI17017 and LI16010
FST-39

Analytical data were evaluated in accordance with applicable USEPA SW-846 method requirements, "USEPA Contract Laboratory Program National Functional Guidelines for Organic Data Review" (October 1999), analytical method control criteria, the analytical laboratory Quality Assurance Control Limits, the Fort Stewart Military Reservation and Hunter Army Airfield Quality Assurance Project Plan (ARCADIS-2008), and professional judgment.

The data review summarized in this report includes a review of all sample collection documentation and the electronic data validation of the analytical data housed in the project database. Sample collection documentation included sample collection logs and chains of custody. The electronic data validation was performed utilizing the EQuIS Data Qualification Module (DQM). DQM checks for the following parameters:

- Holding times and preservation;
- Blank contamination;
    1. Method blanks,
    2. Trip blanks,
    3. Equipment blanks;
- Matrix spike and Duplicate sample recovery;
- Matrix Spike and Matrix Spike Duplicate relative percent differences;
- Laboratory Control Sample and Duplicate recovery;
- Laboratory Control Sample and Duplicate relative percent differences;
- Surrogate recovery (organic analyses only); and
- Field duplicate relative percent difference.

Manual review was performed for the following items:

- Sample dilutions and reporting limits;
- Case Narratives; and
- Laboratory Duplicates

Data was generated by Shealy Environmental Services, Inc. – West Columbia, South Carolina and Test America – Savannah Laboratories. Data qualifiers were applied electronically to the database with any additional qualifiers added manually. A summary of the data as amended by data qualifiers is included with the original hard copy reports.

The attached table summarizes the data that were qualified due to QC deficiencies. The table indicates compounds/analytes qualified based on electronic and manual validation. Refer to the associated method section of the validation checklist for a detailed explanation of qualification. All other data in these SDGs are considered usable as reported.

HUNTER STEWART
ELECTRONIC VALIDATION REVIEW REPORT
SDGs: LI17017 and LI16010
FST-39

The following list of data qualifiers and definitions were applied in accordance with qualification criteria defined in the greater than guidance documents:

UB Compound/analyte detected in blank or associated blank, qualified as a non-detect at listed value.

J The analyte was positively identified, but the associated numerical value is the approximate concentration of the analyte in the sample.

UJ The analyte was not detected greater than the reporting limit; however, the reported quantitation limit is approximate and may, or may not represent the actual limit of quantitation necessary to accurately and precisely measure analyte in the sample.

R The sample result is rejected due to serious deficiencies in the ability to analyze the sample and meet quality control criteria; and the presence or absence of the analyte cannot be verified.

U Not detected at the quantitative reporting limit

DQM RUN BY:	Rachelle Borne	09/27/10
REVIEW PERFORMED BY:	Rachelle Borne	09/27/10
SIGNATURE:	Rachelle Borne	09/27/10
PEER REVIEW:	Dennis Capria	09/28/10

HUNTER STEWART
ELECTRONIC VALIDATION REVIEW REPORT
SDGs: LI17017 and LI16010
FST-39

The following samples were included in this validation:

SDG	Sample ID	Sample Date	Parent Sample
LI16010	F39TWS13 (30-32)(091410)	9/14/2010	
LI16010	F39TWS13 (32-34)(091410)	9/14/2010	
LI16010	F39TWS13 (34-36)(091410)	9/14/2010	
LI16010	F39TWS13 (36-38)(091410)	9/14/2010	
LI16010	F39TWS13 (38-40)(091410)	9/14/2010	
LI16010	F39TWS13 (40-42)(091410)	9/14/2010	
LI16010	F39TWS13 (42-44)(091410)	9/14/2010	
LI16010	F39TWS13 (44-46)(091410)	9/14/2010	
LI16010	F39TWS13 (46-48)(091410)	9/14/2010	
LI16010	F39TWS13 (48-50)(091410)	9/14/2010	
LI16010	F39TWS13 (50-52)(091410)	9/14/2010	
LI16010	F39TWS13 (52-54)(091410)	9/14/2010	
LI16010	F39TWS13 (54-56)(091410)	9/14/2010	
LI16010	F39TWS13 (56-58)(091410)	9/14/2010	
LI16010	F39TWS13 (58-60)(091410)	9/14/2010	
LI16010	F39TWS13 (60-62)(091410)	9/14/2010	
LI16010	F39TWS13 (62-64)(091410)	9/14/2010	
LI16010	F39TWS13 (64-66)(091410)	9/14/2010	
LI16010	F39TWS13 (66-68)(091410)	9/14/2010	
LI16010	F39TWS13 (68-70)(091410)	9/14/2010	
LI17017	F39TWW13 (30-35)	9/15/2010	
LI17017	F39TWW13 (35-40)	9/15/2010	
LI17017	F39TWW13 (40-45)	9/15/2010	
LI17017	F39TWW13 (45-50)	9/15/2010	
LI17017	F39TWW13 (50-55)	9/15/2010	
LI17017	Trip Blank	9/15/2010	
LI17017	F39TWW13 -DUP	9/15/2010	F39TWW13 (40-45)

HUNTER STEWART
ELECTRONIC VALIDATION REVIEW REPORT
SDGs: LI17017 and LI16010
FST-39

ANALYTICAL DATA PACKAGE DOCUMENTATION

GENERAL INFORMATION

Items Reviewed	Reported		Performance Acceptable		Not Required
	No	Yes	No	Yes	
1. Sample results		X		X	
2. Parameters analyzed		X		X	
3. Methods of analysis		X		X	
4. Reporting limits of analysis		X		X	
5. Master tracking list		X		X	
6. Sample collection date		X		X	
7. Laboratory sample received date		X		X	
8. Sample preparation/extraction date		X		X	
9. Sample analysis date		X		X	
10. Copy of chain-of-custody form signed by lab sample custodian		X		X	
11. Narrative summary of QA or sample problems provided		X		X	
12. Laboratory Signature		X		X	
13. South Carolina Certification Number		X		X	

QA - quality assurance

The analytical report was complete with the following exceptions or notations.

Note: The laboratory reported values between the quantitative reporting limit and the method detection limit as estimated concentrations. The "J" qualifier was retained in this validation. Non-detect values are reported at the quantitative reporting limit.

HUNTER STEWART
ELECTRONIC VALIDATION REVIEW REPORT
SDGs: LI17017 and LI16010
FST-39

VOLATILE ORGANIC COMPOUNDS

Items Reviewed	DQM Deficiency		Qualification Applied	
	No	Yes	No	Yes
1. Holding times/Preservation	DQM		DQM	
2. Reporting limits	M		M	
3. Blanks				
A. Method blanks	DQM		DQM	
B. Equipment blanks	NA		NA	
C. Trip blanks		DQM		DQM
4. Surrogate spike recoveries	DQM		DQM	
5. Laboratory control sample (LCS) A. LCS %R		DQM		DQM
B. LCS duplicate (LCSD) %R		DQM		DQM
C. LCS/LCSD RPD	DQM		DQM	
6. Matrix spike (MS)				
A. MS %R	NA		NA	
B. MS duplicate (MSD) %R	NA		NA	
C. MS/MSD precision (RPD)	NA		NA	
7. Field Duplicate precision (RPD)	DQM		DQM	

M – Manual Review %R - percent recovery RPD - relative percent difference DQM – Data Qualification Module

Comments:
This section presents a discussion of any additions or changes to the electronic data validation for compounds analyzed by Method 8260B.

2. SDG (LD09018) Several samples required dilutions due to elevated concentrations of target analytes. There were elevated reporting limits for non-detect results.

3C. SDG (LI17017) Acetone was detected in the trip blank. The associated field samples were qualified as non-detect for acetone if the sample concentration was less than ten times the blank value.

5. SDG (LI17017) The recovery of the compound bromomethane was below the control limit in the LCS and the LCSD. The associated field samples were qualified as estimated for bromomethane.

7. SDG (LI17017) Sample location F39TWW13-DUP was collected as a field duplicate of F39TWW13(40-45). The RPDs were acceptable at less than 40%.

Hunter Stewart
FST-39

SDG	Sample ID	Method	Analyte	Result	Units	Qualifier	Reason	Dilution
LI17017	F39TWW13 (30-35)	SW8260	Bromomethane	<0.50	ug/l	UJ	LCS/LCSD Recovery	1
LI17017	F39TWW13 (35-40)	SW8260	Bromomethane	<2.5	ug/l	UJ	LCS/LCSD Recovery	5
LI17017	F39TWW13 (40-45)	SW8260	Bromomethane	<0.50	ug/l	UJ	LCS/LCSD Recovery	1
LI17017	F39TWW13 (40-45)	SW8260	Acetone	10	ug/l	UB	Blank Contamination	1
LI17017	F39TWW13 (45-50)	SW8260	Bromomethane	<0.50	ug/l	UJ	LCS/LCSD Recovery	1
LI17017	F39TWW13 (50-55)	SW8260	Bromomethane	<0.50	ug/l	UJ	LCS/LCSD Recovery	1
LI17017	F39TWW13 -DUP	SW8260	Bromomethane	<0.50	ug/l	UJ	LCS/LCSD Recovery	1
LI17017	Trip Blank	SW8260	Bromomethane	<0.50	ug/l	UJ	LCS/LCSD Recovery	1

HUNTER STEWART
ELECTRONIC VALIDATION REVIEW REPORT
SDGs: LK03046, LK04016, LK05005, LK06009, LK10010 and LK11004
FST-39

Analytical data were evaluated in accordance with applicable USEPA SW-846 method requirements, "USEPA Contract Laboratory Program National Functional Guidelines for Organic Data Review" (October 1999), analytical method control criteria, the analytical laboratory Quality Assurance Control Limits, the Fort Stewart Military Reservation and Hunter Army Airfield Quality Assurance Project Plan (ARCADIS-2008), and professional judgment.

The data review summarized in this report includes a review of all sample collection documentation and the electronic data validation of the analytical data housed in the project database. Sample collection documentation included sample collection logs and chains of custody. The electronic data validation was performed utilizing the EQuIS Data Qualification Module (DQM). DQM checks for the following parameters:

- Holding times and preservation;
- Blank contamination;
    1. Method blanks,
    2. Trip blanks,
    3. Equipment blanks;
- Matrix spike and Duplicate sample recovery;
- Matrix Spike and Matrix Spike Duplicate relative percent differences;
- Laboratory Control Sample and Duplicate recovery;
- Laboratory Control Sample and Duplicate relative percent differences;
- Surrogate recovery (organic analyses only); and
- Field duplicate relative percent difference.

Manual review was performed for the following items:

- Sample dilutions and reporting limits;
- Case Narratives; and
- Laboratory Duplicates

Data was generated by Shealy Environmental Services, Inc. – West Columbia, South Carolina. Data qualifiers were applied electronically to the database with any additional qualifiers added manually. A summary of the data as amended by data qualifiers is included with the original hard copy reports.

The attached table summarizes the data that were qualified due to QC deficiencies. The table indicates compounds/analytes qualified based on electronic and manual validation. Refer to the associated method section of the validation checklist for a detailed explanation of qualification. All other data in these SDGs are considered usable as reported.

HUNTER STEWART
ELECTRONIC VALIDATION REVIEW REPORT
SDGs: LK03046, LK04016, LK05005, LK06009, LK10010 and LK11004
FST-39

The following list of data qualifiers and definitions were applied in accordance with qualification criteria defined in the greater than guidance documents:

UB Compound/analyte detected in blank or associated blank, qualified as a non-detect at listed value.

J The analyte was positively identified, but the associated numerical value is the approximate concentration of the analyte in the sample.

UJ The analyte was not detected greater than the reporting limit; however, the reported quantitation limit is approximate and may, or may not represent the actual limit of quantitation necessary to accurately and precisely measure analyte in the sample.

R The sample result is rejected due to serious deficiencies in the ability to analyze the sample and meet quality control criteria; and the presence or absence of the analyte cannot be verified.

U Not detected at the quantitative reporting limit

DQM RUN BY:	Rachelle Borne	01/18/11
REVIEW PERFORMED BY:	Rachelle Borne	01/20/11
SIGNATURE:	Rachelle Borne	01/20/11
PEER REVIEW:	Dennis Capria	1/27/2011

HUNTER STEWART
ELECTRONIC VALIDATION REVIEW REPORT
SDGs: LK03046, LK04016, LK05005, LK06009, LK10010 and LK11004
FST-39

The following samples were included in this validation:

SDG	Sample ID	Sample Date	Parent Sample
LK03046	B-2 (30-34')-20101102	11/2/2010	
LK03046	B-2 (36-40')-20101102	11/2/2010	
LK03046	B-2 (42-46')-20101102	11/2/2010	
LK03046	D-25 (30-34')-20101102	11/2/2010	
LK03046	D-25 (36-40')-20101102	11/2/2010	
LK03046	D-26 (33-35')-20101102	11/2/2010	
LK03046	Trip Blank-20101103	11/3/2010	
LK04016	Trip Blank-20101104	11/4/2010	
LK04016	B-5 (30-34')-20101103	11/3/2010	
LK04016	B-5 (36-40')-20101103	11/3/2010	
LK04016	B-5 (42-46')-20101103	11/3/2010	
LK04016	C-12 (30-34')-20101103	11/3/2010	
LK04016	C-12 (36-40')-20101103	11/3/2010	
LK04016	C-12 (42-46')-20101103	11/3/2010	
LK04016	D-25 (42-46')-20101102	11/2/2010	
LK05005	C-14 (30-34')-20101104	11/4/2010	
LK05005	C-14 (36-40')-20101104	11/4/2010	
LK05005	C-14 (42-46')-20101104	11/4/2010	
LK05005	D-23 (30-34')-20101104	11/4/2010	
LK05005	D-23 (36-40')-20101104	11/4/2010	
LK05005	D-23 (42-46')-20101104	11/4/2010	
LK05005	D-30 (30-34')-20101103	11/3/2010	
LK05005	D-30 (36-40')-20101103	11/3/2010	
LK05005	D-30 (42-46')-20101103	11/3/2010	
LK05005	Trip Blank-20101105	11/5/2010	
LK06009	DP-27 (30-34')-20101105	11/5/2010	
LK06009	DP-27 (36-40')-20101105	11/5/2010	
LK06009	DP-27 (42-46')-20101105	11/5/2010	
LK06009	DP-28 (30-34')-20101105	11/5/2010	
LK06009	DP-28 (42-46')-20101105	11/5/2010	
LK06009	TRIP BLANK-20101106	11/6/2010	
LK10010	E-11 (30-34)-20101108	11/8/2010	
LK10010	E-11 (36-40)-20101108	11/8/2010	
LK10010	E-11 (42-46)-20101108	11/8/2010	
LK10010	E-7 (30-34)-20101108	11/8/2010	
LK10010	E-7 (42-46)-20101108	11/8/2010	
LK11004	B-6 (30-34)-20101109	11/9/2010	
LK11004	B-6 (36-40)-20101109	11/9/2010	
LK11004	E-10 (30-34)-20101110	11/10/2010	
LK11004	E-10 (36-40)-20101110	11/10/2010	
LK11004	E-10 (42-46)-20101110	11/10/2010	
LK11004	E-8 (30-34)-20101109	11/9/2010	

HUNTER STEWART
ELECTRONIC VALIDATION REVIEW REPORT
SDGs: LK03046, LK04016, LK05005, LK06009, LK10010 and LK11004
FST-39

SDG	Sample ID	Sample Date	Parent Sample
LK11004	E-8 (36-40)-20101109	11/9/2010	
LK11004	E-8 (42-46)-20101109	11/9/2010	
LK11004	E-9 (30-34)-20101110	11/10/2010	
LK11004	E-9 (36-40)-20101110	11/10/2010	
LK11004	E-9 (42-46)-20101110	11/10/2010	
LK11004	Trip Blank-20101110	11/10/2010	
LK12004	FB6-SL-20101111	11/11/2010	

HUNTER STEWART
ELECTRONIC VALIDATION REVIEW REPORT
SDGs: LK03046, LK04016, LK05005, LK06009, LK10010 and LK11004
FST-39

ANALYTICAL DATA PACKAGE DOCUMENTATION

GENERAL INFORMATION

Items Reviewed	Reported		Performance Acceptable		Not Required
	No	Yes	No	Yes	
1. Sample results		X		X	
2. Parameters analyzed		X		X	
3. Methods of analysis		X		X	
4. Reporting limits of analysis		X		X	
5. Master tracking list		X		X	
6. Sample collection date		X		X	
7. Laboratory sample received date		X		X	
8. Sample preparation/extraction date		X		X	
9. Sample analysis date		X		X	
10. Copy of chain-of-custody form signed by lab sample custodian		X		X	
11. Narrative summary of QA or sample problems provided		X		X	
12. Laboratory Signature		X		X	
13. South Carolina Certification Number		X		X	

QA - quality assurance

The analytical report was complete with the following exceptions or notations.

Note: The laboratory reported values between the quantitative reporting limit and the method detection limit as estimated concentrations. The "J" qualifier was retained in this validation. Non-detect values are reported at the quantitative reporting limit.

HUNTER STEWART
ELECTRONIC VALIDATION REVIEW REPORT
SDGs: LK03046, LK04016, LK05005, LK06009, LK10010 and LK11004
FST-39

VOLATILE ORGANIC COMPOUNDS

Items Reviewed	DQM Deficiency		Qualification Applied	
	No	Yes	No	Yes
1. Holding times/Preservation	DQM		DQM	
2. Reporting limits	M		M	
3. Blanks				
A. Method blanks		DQM		DQM
B. Equipment blanks	NA		NA	
C. Trip blanks		DQM		DQM
4. Surrogate spike recoveries	DQM		DQM	
5. Laboratory control sample (LCS) A. LCS %R		DQM		DQM
B. LCS duplicate (LCSD) %R	DQM		DQM	
C. LCS/LCSD RPD		DQM		DQM
6. Matrix spike (MS)				
A. MS %R	NA		NA	
B. MS duplicate (MSD) %R	NA		NA	
C. MS/MSD precision (RPD)	NA		NA	
7. Field Duplicate precision (RPD)	NA		NA	

M – Manual Review %R - percent recovery RPD - relative percent difference DQM – Data Qualification Module

Comments:
This section presents a discussion of any additions or changes to the electronic data validation for compounds analyzed by Method 8260B.

Note: SDG (LK04016) Sample locations D-25(42-26), C-12(42-46) and B-5(30-34) were received in VOA vials preserved with hydrochloric acid; however, the samples were too muddy to be analyzed as waters. Per ARCADIS the samples were analyzed and reported as solids.

2. Several samples required dilutions due to elevated concentrations of target analytes. There were elevated reporting limits for non-detect results.

3A. SDG (LK04016) Bromoform and 1,2,4-tichlorobenzene were detected in the method blank for batch 46104. The associated field samples were qualified as non-detect for these compounds if the sample concentrations were less than five times the blank values.

SDG (LK04016) Toluene was detected in the method blank for batch 46137. The associated field samples were qualified as non-detect for this compound if the sample concentrations were less than five times the blank value.

SDG (LK06009) Toluene was detected in the method blank for batch 46375. The associated field samples were qualified as non-detect for this compound if the sample concentrations were less than five times the blank value.

3C. SDG (LK04016) Acetone and bromoform were detected in the trip blank. The associated field samples were qualified as non-detect for these compounds if the sample concentrations were less than ten times the blank values for acetone and less than five times the blank values for bromoform.

SDG (LK05005) Carbon disulfide was detected in the trip blank. The associated field samples were qualified as non-detect for this compound if the sample concentrations were less than five times the blank value.

SDG (LK06009) Acetone was detected in the trip blank. The associated field samples were qualified as non-detect for this compound if the sample concentrations were less than ten times the blank value.

SDG (LK10010) Acetone was detected in the trip blank. The associated field samples were qualified as non-detect for this compound if the sample concentrations were less than ten times the blank value.

SDG (LK11004) Carbon disulfide and 1,2,4-trichlorobenzene were detected in the trip blank. The associated field samples were non-detect for these compounds; therefore, qualification of the data was not warranted.

5. SDG (LK03046, LK04016 and LK05005) The recovery of methyl acetate was above the control limit in the LCS for batch 45932. The associated field samples were non-detect for methyl acetate; therefore, qualification of the data was not warranted. The RPDs between the LCS/LCSD pair were above the control limit for methyl acetate, bromomethane and vinyl chloride. The associated field samples were qualified as estimated for these compounds.

   SDG (LK10010 and LK11004) The RPDs between the LCS/LCSD pair were above the control limit for 2-butanone, carbon disulfide, cyclohexane, 1,1-dichloroethane, trans-1,2-dichloroethene, cis-1,2-dichloroethene, methyl acetate, MTBE and methylene chloride for batch 46389. The associated field sample was qualified as estimated for these compounds.

SDG	Sample ID	Method	Analyte	Result	Units	Qualifier	Reason	Dilution
LK03046	B-2 (30-34')-20101102	SW8260	Bromomethane	<0.50	ug/l	UJ	LCS/LCSD RPD	1
LK03046	B-2 (30-34')-20101102	SW8260	Vinyl Chloride	<0.50	ug/l	UJ	LCS/LCSD RPD	1
LK03046	B-2 (30-34')-20101102	SW8260	Methyl acetate	<1.0	ug/l	UJ	LCS/LCSD RPD	1
LK03046	B-2 (36-40')-20101102	SW8260	Bromomethane	<0.50	ug/l	UJ	LCS/LCSD RPD	1
LK03046	B-2 (36-40')-20101102	SW8260	Vinyl Chloride	<0.50	ug/l	UJ	LCS/LCSD RPD	1
LK03046	B-2 (36-40')-20101102	SW8260	Methyl acetate	<1.0	ug/l	UJ	LCS/LCSD RPD	1
LK03046	B-2 (42-46')-20101102	SW8260	Bromomethane	<0.50	ug/l	UJ	LCS/LCSD RPD	1
LK03046	B-2 (42-46')-20101102	SW8260	Vinyl Chloride	<0.50	ug/l	UJ	LCS/LCSD RPD	1
LK03046	B-2 (42-46')-20101102	SW8260	Methyl acetate	<1.0	ug/l	UJ	LCS/LCSD RPD	1
LK03046	D-25 (30-34')-20101102	SW8260	Bromomethane	<5.0	ug/l	UJ	LCS/LCSD RPD	10
LK03046	D-25 (30-34')-20101102	SW8260	Vinyl Chloride	<5.0	ug/l	UJ	LCS/LCSD RPD	10
LK03046	D-25 (30-34')-20101102	SW8260	Methyl acetate	<10.0	ug/l	UJ	LCS/LCSD RPD	10
LK03046	D-25 (36-40')-20101102	SW8260	Methyl acetate	<1.0	ug/l	UJ	LCS/LCSD RPD	1
LK03046	D-25 (36-40')-20101102	SW8260	Bromomethane	<0.50	ug/l	UJ	LCS/LCSD RPD	1
LK03046	D-25 (36-40')-20101102	SW8260	Vinyl Chloride	0.81	ug/l	J	LCS/LCSD RPD	1

SDG	Sample ID	Method	Analyte	Result	Units	Qualifier	Reason	Dilution
LK03046	D-26 (33-35')-20101102	SW8260	Methyl acetate	<10.0	ug/l	UJ	LCS/LCSD RPD	10
LK03046	D-26 (33-35')-20101102	SW8260	Vinyl Chloride	<5.0	ug/l	UJ	LCS/LCSD RPD	10
LK03046	D-26 (33-35')-20101102	SW8260	Bromomethane	<5.0	ug/l	UJ	LCS/LCSD RPD	10
LK04016	B-5 (30-34')-20101103	SW8260	Vinyl Chloride	<0.50	ug/l	UJ	LCS/LCSD RPD	1
LK04016	B-5 (30-34')-20101103	SW8260	Methyl acetate	<1.0	ug/l	UJ	LCS/LCSD RPD	1
LK04016	B-5 (30-34')-20101103	SW8260	Bromomethane	<0.50	ug/l	UJ	LCS/LCSD RPD	1
LK04016	B-5 (36-40')-20101103	SW8260	Bromomethane	<0.50	ug/l	UJ	LCS/LCSD RPD	1
LK04016	B-5 (36-40')-20101103	SW8260	Vinyl Chloride	<0.50	ug/l	UJ	LCS/LCSD RPD	1
LK04016	B-5 (36-40')-20101103	SW8260	Methyl acetate	<1.0	ug/l	UJ	LCS/LCSD RPD	1
LK04016	B-5 (42-46')-20101103	SW8260	Toluene	0.69	ug/l	UB	Blank Contamination	1
LK04016	B-5 (42-46')-20101103	SW8260	Acetone	19	ug/l	UB	Blank Contamination	1
LK04016	C-12 (30-34')-20101103	SW8260	Vinyl Chloride	<0.50	ug/l	UJ	LCS/LCSD RPD	1
LK04016	C-12 (30-34')-20101103	SW8260	Methyl acetate	<1.0	ug/l	UJ	LCS/LCSD RPD	1
LK04016	C-12 (30-34')-20101103	SW8260	Bromomethane	<0.50	ug/l	UJ	LCS/LCSD RPD	1
LK04016	C-12 (30-34')-20101103	SW8260	Acetone	4.5	ug/l	UB	Blank Contamination	1

SDG	Sample ID	Method	Analyte	Result	Units	Qualifier	Reason	Dilution
LK04016	C-12 (36-40')-20101103	SW8260	Bromomethane	<0.50	ug/l	UJ	LCS/LCSD RPD	1
LK04016	C-12 (36-40')-20101103	SW8260	Vinyl Chloride	<0.50	ug/l	UJ	LCS/LCSD RPD	1
LK04016	C-12 (36-40')-20101103	SW8260	Methyl acetate	<1.0	ug/l	UJ	LCS/LCSD RPD	1
LK04016	C-12 (36-40')-20101103	SW8260	Acetone	9.1	ug/l	UB	Blank Contamination	1
LK04016	C-12 (42-46')-20101103	SW8260	1,2,4-Trichlorobenzene	1.7	ug/kg	UB	Blank Contamination	1
LK04016	D-25 (42-46')-20101102	SW8260	Toluene	1.8	ug/l	UB	Blank Contamination	1
LK04016	D-25 (42-46')-20101102	SW8260	Acetone	20	ug/l	UB	Blank Contamination	1
LK05005	C-14 (36-40')-20101104	SW8260	Carbon disulfide	0.6	ug/l	UB	Blank Contamination	2
LK05005	D-23 (30-34')-20101104	SW8260	Carbon disulfide	0.52	ug/l	UB	Blank Contamination	1
LK05005	D-23 (36-40')-20101104	SW8260	Carbon disulfide	0.7	ug/l	UB	Blank Contamination	1
LK05005	D-30 (30-34')-20101103	SW8260	Carbon disulfide	0.44	ug/l	UB	Blank Contamination	1
LK06009	DP-27 (30-34')-20101105	SW8260	Toluene	0.65	ug/l	UB	Blank Contamination	1
LK06009	DP-27 (30-34')-20101105	SW8260	Acetone	7.3	ug/l	UB	Blank Contamination	1
LK06009	DP-27 (36-40')-20101105	SW8260	Toluene	0.9	ug/l	UB	Blank Contamination	1
LK06009	DP-27 (36-40')-20101105	SW8260	Acetone	6.7	ug/l	UB	Blank Contamination	1

SDG	Sample ID	Method	Analyte	Result	Units	Qualifier	Reason	Dilution
LK06009	DP-27 (42-46')-20101105	SW8260	Acetone	15	ug/l	UB	Blank Contamination	1
LK06009	DP-28 (30-34')-20101105	SW8260	Toluene	0.66	ug/l	UB	Blank Contamination	1
LK06009	DP-28 (30-34')-20101105	SW8260	Acetone	7	ug/l	UB	Blank Contamination	1
LK06009	DP-28 (42-46')-20101105	SW8260	Acetone	30	ug/l	UB	Blank Contamination	1
LK10010	E-11 (36-40)-20101108	SW8260	Acetone	45	ug/l	UB	Blank Contamination	1
LK10010	E-11 (42-46)-20101108	SW8260	Acetone	20	ug/l	UB	Blank Contamination	1
LK10010	E-7 (30-34)-20101108	SW8260	Acetone	9.3	ug/l	UB	Blank Contamination	1
LK10010	E-7 (42-46)-20101108	SW8260	Acetone	47	ug/l	UB	Blank Contamination	1
LK10010	Trip Blank-20101110	SW8260	Cyclohexane	<0.50	ug/l	UJ	LCS/ICSD RPD	1
LK10010	Trip Blank-20101110	SW8260	Methyl acetate	<1.0	ug/l	UJ	LCS/ICSD RPD	1
LK10010	Trip Blank-20101110	SW8260	Methylene Chloride	<0.50	ug/l	UJ	LCS/ICSD RPD	1
LK10010	Trip Blank-20101110	SW8260	trans-1,2-Dichloroethene	<0.50	ug/l	UJ	LCS/ICSD RPD	1
LK10010	Trip Blank-20101110	SW8260	Carbon disulfide	<0.50	ug/l	UJ	LCS/ICSD RPD	1
LK10010	Trip Blank-20101110	SW8260	1,1-Dichloroethane	<0.50	ug/l	UJ	LCS/ICSD RPD	1
LK10010	Trip Blank-20101110	SW8260	cis-1,2-Dichloroethene	<0.50	ug/l	UJ	LCS/ICSD RPD	1

SDG	Sample ID	Method	Analyte	Result	Units	Qualifier	Reason	Dilution
LK10010	Trip Blank-20101110	SW8260	2-Butanone (MEK)	<10.0	ug/l	UJ	LCS/ICSD RPD	1
LK10010	Trip Blank-20101110	SW8260	Methyl tert-butyl ether	<0.50	ug/l	UJ	LCS/ICSD RPD	1
LK11004	Trip BlankA-20101110	SW8260	Methyl acetate	<1.0	ug/l	UJ	LCS/ICSD RPD	1
LK11004	Trip BlankA-20101110	SW8260	2-Butanone (MEK)	<10.0	ug/l	UJ	LCS/ICSD RPD	1
LK11004	Trip BlankA-20101110	SW8260	1,1-Dichloroethane	<0.50	ug/l	UJ	LCS/ICSD RPD	1
LK11004	Trip BlankA-20101110	SW8260	Carbon disulfide	0.37	ug/l	J	LCS/ICSD RPD	1
LK11004	Trip BlankA-20101110	SW8260	Methylene Chloride	<0.50	ug/l	UJ	LCS/ICSD RPD	1
LK11004	Trip BlankA-20101110	SW8260	Methyl tert-butyl ether	<0.50	ug/l	UJ	LCS/ICSD RPD	1
LK11004	Trip BlankA-20101110	SW8260	trans-1,2-Dichloroethene	<0.50	ug/l	UJ	LCS/ICSD RPD	1
LK11004	Trip BlankA-20101110	SW8260	Cyclohexane	<0.50	ug/l	UJ	LCS/ICSD RPD	1
LK11004	Trip BlankA-20101110	SW8260	cis-1,2-Dichloroethene	<0.50	ug/l	UJ	LCS/ICSD RPD	1

HUNTER STEWART
ELECTRONIC VALIDATION REVIEW REPORT
SDG: MI01005
FST-39

Analytical data were evaluated in accordance with applicable USEPA SW-846 method requirements, "USEPA Contract Laboratory Program National Functional Guidelines for Organic Data Review" (October 1999), analytical method control criteria, the analytical laboratory Quality Assurance Control Limits, the Fort Stewart Military Reservation and Hunter Army Airfield Quality Assurance Project Plan (ARCADIS-2008), and professional judgment.

The data review summarized in this report includes a review of all sample collection documentation and the electronic data validation of the analytical data housed in the project database. Sample collection documentation included sample collection logs and chains of custody. The electronic data validation was performed utilizing the EQuIS Data Qualification Module (DQM). DQM checks for the following parameters:

- Holding times and preservation;
- Blank contamination;
    1. Method blanks,
    2. Trip blanks,
    3. Equipment blanks;
- Matrix spike and Duplicate sample recovery;
- Matrix Spike and Matrix Spike Duplicate relative percent differences;
- Laboratory Control Sample and Duplicate recovery;
- Laboratory Control Sample and Duplicate relative percent differences;
- Surrogate recovery (organic analyses only); and
- Field duplicate relative percent difference.

Manual review was performed for the following items:

- Sample dilutions and reporting limits;
- Case Narratives; and
- Laboratory Duplicates

Data was generated by Shealy Environmental Services, Inc. – West Columbia, South Carolina. Data qualifiers were applied electronically to the database with any additional qualifiers added manually. A summary of the data as amended by data qualifiers is included with the original hard copy reports.

The attached table summarizes the data that were qualified due to QC deficiencies. The table indicates compounds/analytes qualified based on electronic and manual validation. Refer to the associated method section of the validation checklist for a detailed explanation of qualification. All other data in these SDGs are considered usable as reported.

HUNTER STEWART
ELECTRONIC VALIDATION REVIEW REPORT
SDG: MI01005
FST-39

The following list of data qualifiers and definitions were applied in accordance with qualification criteria defined in the greater than guidance documents:

UB Compound/analyte detected in blank or associated blank, qualified as a non-detect at listed value.

J The analyte was positively identified, but the associated numerical value is the approximate concentration of the analyte in the sample.

UJ The analyte was not detected greater- than the reporting limit; however, the reported quantitation limit is approximate and may, or may not represent the actual limit of quantitation necessary to accurately and precisely measure analyte in the sample.

R The sample result is rejected due to serious deficiencies in the ability to analyze the sample and meet quality control criteria; and the presence or absence of the analyte cannot be verified.

U Not detected at the quantitative reporting limit

DQM RUN BY:	Rachelle Borne	10/31/11
REVIEW PERFORMED BY:	Rachelle Borne	10/31/11
SIGNATURE:	Rachelle Borne	10/31/11
PEER REVIEW:	Todd Church	11/3/11

HUNTER STEWART
ELECTRONIC VALIDATION REVIEW REPORT
SDG: MI01005
FST-39

The following samples were included in this validation:

SDG	Sample ID	Sample Date	Parent Sample
MI01005	G4MW055(083011)	08/30/11	
MI01005	G4MW057(083011)	08/30/11	
MI01005	G4MW056(083111)	08/31/11	
MI01005	Trip Blank(083111)	08/31/11	

HUNTER STEWART
ELECTRONIC VALIDATION REVIEW REPORT
SDG: MI01005
FST-39

ANALYTICAL DATA PACKAGE DOCUMENTATION

GENERAL INFORMATION

Items Reviewed	Reported		Performance Acceptable		Not Required
	No	Yes	No	Yes	
1. Sample results		X		X	
2. Parameters analyzed		X		X	
3. Methods of analysis		X		X	
4. Reporting limits of analysis		X		X	
5. Master tracking list		X		X	
6. Sample collection date		X		X	
7. Laboratory sample received date		X		X	
8. Sample preparation/extraction date		X		X	
9. Sample analysis date		X		X	
10. Copy of chain-of-custody form signed by lab sample custodian		X		X	
11. Narrative summary of QA or sample problems provided		X		X	
12. Laboratory Signature		X		X	
13. South Carolina Certification Number		X		X	

QA - quality assurance

The analytical report was complete with the following exceptions or notations.

Note: The laboratory reported values between the quantitative reporting limit and the method detection limit as estimated concentrations. The "J" qualifier was retained in this validation. Non-detect values are reported at the quantitative reporting limit.

HUNTER STEWART
ELECTRONIC VALIDATION REVIEW REPORT
SDG: MI01005
FST-39

VOLATILE ORGANIC COMPOUNDS

Items Reviewed	DQM Deficiency		Qualification Applied	
	No	Yes	No	Yes
1. Holding times/Preservation	DQM		DQM	
2. Reporting limits	M		M	
3. Blanks				
A. Method blanks	DQM		DQM	
B. Equipment blanks	NA		NA	
C. Trip blanks	DQM		DQM	
4. Surrogate spike recoveries	DQM		DQM	
5. Laboratory control sample (LCS) A. LCS %R	DQM		DQM	
B. LCS duplicate (LCSD) %R	DQM		DQM	
C. LCS/LCSD RPD	DQM		DQM	
6. Matrix spike (MS)				
A. MS %R	NA		NA	
B. MS duplicate (MSD) %R	NA		NA	
C. MS/MSD precision (RPD)	NA		NA	
7. Field Duplicate precision (RPD)	NA		NA	

M – Manual Review %R - percent recovery RPD - relative percent difference
DQM – Data Qualification Module

Comments:
This section presents a discussion of any additions or changes to the electronic data validation for compounds analyzed by Method 8260B.

No qualification required.

HUNTER STEWART
ELECTRONIC VALIDATION REVIEW REPORT
SDG: MJ27027
FST-39

Analytical data were evaluated in accordance with applicable USEPA SW-846 method requirements, "USEPA Contract Laboratory Program National Functional Guidelines for Organic Data Review" (October 1999), analytical method control criteria, the analytical laboratory Quality Assurance Control Limits, the Fort Stewart Military Reservation and Hunter Army Airfield Quality Assurance Project Plan (ARCADIS-2008), and professional judgment.

The data review summarized in this report includes a review of all sample collection documentation and the electronic data validation of the analytical data housed in the project database. Sample collection documentation included sample collection logs and chains of custody. The electronic data validation was performed utilizing the EQuIS Data Qualification Module (DQM). DQM checks for the following parameters:

- Holding times and preservation;
- Blank contamination;
    1. Method blanks,
    2. Trip blanks,
    3. Equipment blanks;
- Matrix spike and Duplicate sample recovery;
- Matrix Spike and Matrix Spike Duplicate relative percent differences;
- Laboratory Control Sample and Duplicate recovery;
- Laboratory Control Sample and Duplicate relative percent differences;
- Surrogate recovery (organic analyses only); and
- Field duplicate relative percent difference.

Manual review was performed for the following items:

- Sample dilutions and reporting limits;
- Case Narratives; and
- Laboratory Duplicates

Data was generated by Shealy Environmental Services, Inc. – West Columbia, South Carolina. Data qualifiers were applied electronically to the database with any additional qualifiers added manually. A summary of the data as amended by data qualifiers is included with the original hard copy reports.

The attached table summarizes the data that were qualified due to QC deficiencies. The table indicates compounds/analytes qualified based on electronic and manual validation. Refer to the associated method section of the validation checklist for a detailed explanation of qualification. All other data in these SDGs are considered usable as reported.

HUNTER STEWART
ELECTRONIC VALIDATION REVIEW REPORT
SDG: MJ27027
FST-39

The following list of data qualifiers and definitions were applied in accordance with qualification criteria defined in the greater than guidance documents:

UB Compound/analyte detected in blank or associated blank, qualified as a non-detect at listed value.

J The analyte was positively identified, but the associated numerical value is the approximate concentration of the analyte in the sample.

UJ The analyte was not detected greater than the reporting limit; however, the reported quantitation limit is approximate and may, or may not represent the actual limit of quantitation necessary to accurately and precisely measure analyte in the sample.

R The sample result is rejected due to serious deficiencies in the ability to analyze the sample and meet quality control criteria; and the presence or absence of the analyte cannot be verified.

U Not detected at the quantitative reporting limit

DQM RUN BY:	Rachelle Borne	10/31/11
REVIEW PERFORMED BY:	Rachelle Borne	10/31/11
SIGNATURE:	Rachelle Borne	10/31/11
PEER REVIEW:	Todd Church	11/3/11

HUNTER STEWART
ELECTRONIC VALIDATION REVIEW REPORT
SDG: MJ27027
FST-39

The following samples were included in this validation:

SDG	Sample ID	Sample Date	Parent Sample
MJ27027	G4MW058(10252011)	10/25/11	
MJ27027	Trip Blank	10/25/11	

HUNTER STEWART
ELECTRONIC VALIDATION REVIEW REPORT
SDG: MJ27027
FST-39

ANALYTICAL DATA PACKAGE DOCUMENTATION

GENERAL INFORMATION

Items Reviewed	Reported		Performance Acceptable		Not Required
	No	Yes	No	Yes	
1. Sample results		X		X	
2. Parameters analyzed		X		X	
3. Methods of analysis		X		X	
4. Reporting limits of analysis		X		X	
5. Master tracking list		X		X	
6. Sample collection date		X		X	
7. Laboratory sample received date		X		X	
8. Sample preparation/extraction date		X		X	
9. Sample analysis date		X		X	
10. Copy of chain-of-custody form signed by lab sample custodian		X		X	
11. Narrative summary of QA or sample problems provided		X		X	
12. Laboratory Signature		X		X	
13. South Carolina Certification Number		X		X	

QA - quality assurance

The analytical report was complete with the following exceptions or notations.

Note: The laboratory reported values between the quantitative reporting limit and the method detection limit as estimated concentrations. The "J" qualifier was retained in this validation. Non-detect values are reported at the quantitative reporting limit.

HUNTER STEWART
ELECTRONIC VALIDATION REVIEW REPORT
SDG: MJ27027
FST-39

VOLATILE ORGANIC COMPOUNDS

Items Reviewed	DQM Deficiency		Qualification Applied	
	No	Yes	No	Yes
1. Holding times/Preservation	DQM		DQM	
2. Reporting limits	M		M	
3. Blanks				
A. Method blanks		DQM		DQM
B. Equipment blanks	NA		NA	
C. Trip blanks	DQM		DQM	
4. Surrogate spike recoveries		DQM		DQM
5. Laboratory control sample (LCS) A. LCS %R	DQM		DQM	
B. LCS duplicate (LCSD) %R	NA		NA	
C. LCS/LCSD RPD	NA		NA	
6. Matrix spike (MS)				
A. MS %R	NA		NA	
B. MS duplicate (MSD) %R	NA		NA	
C. MS/MSD precision (RPD)	NA		NA	
7. Field Duplicate precision (RPD)	NA		NA	

M – Manual Review %R - percent recovery RPD - relative percent difference
DQM – Data Qualification Module

Comments:
This section presents a discussion of any additions or changes to the electronic data validation for compounds analyzed by Method 8260B.

3A. The compound carbon disulfide was detected in the method blank. The associated field sample was qualified as non-detect for carbon disulfide because the sample concentration was less than five times the blank value.

3C. The compounds carbon disulfide and chloromethane were detected in the trip blank. The associated field sample was non-detect for chloromethane; therefore, qualification of the data was not warranted. The associated field sample was qualified as non-detect for carbon disulfide because the sample concentration was less than five times the blank value.

Hunter Stewart
FST-39-10

SDG	Sample ID	Method	Analyte	Result	Units	Qualifier	Reason	Dilution
MJ27027	G4MW058 (10252011)	SW8260	Carbon disulfide	0.34	ug/l	UB	Blank Contamination	1

Hunter Stewart
FST-39-10

SDG	Sample ID	Method	Analyte	Result	Units	Qualifier	Reason	Dilution
MJ27027	G4MW058 (10252011)	SW8260	Carbon disulfide	0.34	ug/l	UB	Blank Contamination	1

HUNTER STEWART
ELECTRONIC VALIDATION REVIEW REPORT
SDG: MJ27027
FST-39

Analytical data were evaluated in accordance with applicable USEPA SW-846 method requirements, "USEPA Contract Laboratory Program National Functional Guidelines for Organic Data Review" (October 1999), analytical method control criteria, the analytical laboratory Quality Assurance Control Limits, the Fort Stewart Military Reservation and Hunter Army Airfield Quality Assurance Project Plan (ARCADIS-2008), and professional judgment.

The data review summarized in this report includes a review of all sample collection documentation and the electronic data validation of the analytical data housed in the project database. Sample collection documentation included sample collection logs and chains of custody. The electronic data validation was performed utilizing the EQuIS Data Qualification Module (DQM). DQM checks for the following parameters:

- Holding times and preservation;
- Blank contamination;
    1. Method blanks,
    2. Trip blanks,
    3. Equipment blanks;
- Matrix spike and Duplicate sample recovery;
- Matrix Spike and Matrix Spike Duplicate relative percent differences;
- Laboratory Control Sample and Duplicate recovery;
- Laboratory Control Sample and Duplicate relative percent differences;
- Surrogate recovery (organic analyses only); and
- Field duplicate relative percent difference.

Manual review was performed for the following items:

- Sample dilutions and reporting limits;
- Case Narratives; and
- Laboratory Duplicates

Data was generated by Shealy Environmental Services, Inc. – West Columbia, South Carolina. Data qualifiers were applied electronically to the database with any additional qualifiers added manually. A summary of the data as amended by data qualifiers is included with the original hard copy reports.

The attached table summarizes the data that were qualified due to QC deficiencies. The table indicates compounds/analytes qualified based on electronic and manual validation. Refer to the associated method section of the validation checklist for a detailed explanation of qualification. All other data in these SDGs are considered usable as reported.

HUNTER STEWART
ELECTRONIC VALIDATION REVIEW REPORT
SDG: MJ27027
FST-39

The following list of data qualifiers and definitions were applied in accordance with qualification criteria defined in the greater than guidance documents:

UB Compound/analyte detected in blank or associated blank, qualified as a non-detect at listed value.

J The analyte was positively identified, but the associated numerical value is the approximate concentration of the analyte in the sample.

UJ The analyte was not detected greater than the reporting limit; however, the reported quantitation limit is approximate and may, or may not represent the actual limit of quantitation necessary to accurately and precisely measure analyte in the sample.

R The sample result is rejected due to serious deficiencies in the ability to analyze the sample and meet quality control criteria; and the presence or absence of the analyte cannot be verified.

U Not detected at the quantitative reporting limit

DQM RUN BY:	Rachelle Borne	10/31/11
REVIEW PERFORMED BY:	Rachelle Borne	10/31/11
SIGNATURE:	Rachelle Borne	10/31/11
PEER REVIEW:	Todd Church	11/3/11

HUNTER STEWART
ELECTRONIC VALIDATION REVIEW REPORT
SDG: MJ27027
FST-39

The following samples were included in this validation:

SDG	Sample ID	Sample Date	Parent Sample
MJ27027	G4MW058(10252011)	10/25/11	
MJ27027	Trip Blank	10/25/11	

HUNTER STEWART
ELECTRONIC VALIDATION REVIEW REPORT
SDG: MJ27027
FST-39

ANALYTICAL DATA PACKAGE DOCUMENTATION

GENERAL INFORMATION

Items Reviewed	Reported		Performance Acceptable		Not Required
	No	Yes	No	Yes	
1. Sample results		X		X	
2. Parameters analyzed		X		X	
3. Methods of analysis		X		X	
4. Reporting limits of analysis		X		X	
5. Master tracking list		X		X	
6. Sample collection date		X		X	
7. Laboratory sample received date		X		X	
8. Sample preparation/extraction date		X		X	
9. Sample analysis date		X		X	
10. Copy of chain-of-custody form signed by lab sample custodian		X		X	
11. Narrative summary of QA or sample problems provided		X		X	
12. Laboratory Signature		X		X	
13. South Carolina Certification Number		X		X	

QA - quality assurance

The analytical report was complete with the following exceptions or notations.

Note: The laboratory reported values between the quantitative reporting limit and the method detection limit as estimated concentrations. The "J" qualifier was retained in this validation. Non-detect values are reported at the quantitative reporting limit.

HUNTER STEWART
ELECTRONIC VALIDATION REVIEW REPORT
SDG: MJ27027
FST-39

VOLATILE ORGANIC COMPOUNDS

Items Reviewed	DQM Deficiency		Qualification Applied	
	No	Yes	No	Yes
1. Holding times/Preservation	DQM		DQM	
2. Reporting limits	M		M	
3. Blanks				
A. Method blanks		DQM		DQM
B. Equipment blanks	NA		NA	
C. Trip blanks	DQM		DQM	
4. Surrogate spike recoveries		DQM		DQM
5. Laboratory control sample (LCS) A. LCS %R	DQM		DQM	
B. LCS duplicate (LCSD) %R	NA		NA	
C. LCS/LCSD RPD	NA		NA	
6. Matrix spike (MS)				
A. MS %R	NA		NA	
B. MS duplicate (MSD) %R	NA		NA	
C. MS/MSD precision (RPD)	NA		NA	
7. Field Duplicate precision (RPD)	NA		NA	

M – Manual Review %R - percent recovery RPD - relative percent difference
DQM – Data Qualification Module

Comments:
This section presents a discussion of any additions or changes to the electronic data validation for compounds analyzed by Method 8260B.

3A. The compound carbon disulfide was detected in the method blank. The associated field sample was qualified as non-detect for carbon disulfide because the sample concentration was less than five times the blank value.

3C. The compounds carbon disulfide and chloromethane were detected in the trip blank. The associated field sample was non-detect for chloromethane; therefore, qualification of the data was not warranted. The associated field sample was qualified as non-detect for carbon disulfide because the sample concentration was less than five times the blank value.

HUNTER STEWART
ELECTRONIC VALIDATION REVIEW REPORT
SDG: MI01005
FST-39

Analytical data were evaluated in accordance with applicable USEPA SW-846 method requirements, "USEPA Contract Laboratory Program National Functional Guidelines for Organic Data Review" (October 1999), analytical method control criteria, the analytical laboratory Quality Assurance Control Limits, the Fort Stewart Military Reservation and Hunter Army Airfield Quality Assurance Project Plan (ARCADIS-2008), and professional judgment.

The data review summarized in this report includes a review of all sample collection documentation and the electronic data validation of the analytical data housed in the project database. Sample collection documentation included sample collection logs and chains of custody. The electronic data validation was performed utilizing the EQuIS Data Qualification Module (DQM). DQM checks for the following parameters:

- Holding times and preservation;
- Blank contamination;
    1. Method blanks,
    2. Trip blanks,
    3. Equipment blanks;
- Matrix spike and Duplicate sample recovery;
- Matrix Spike and Matrix Spike Duplicate relative percent differences;
- Laboratory Control Sample and Duplicate recovery;
- Laboratory Control Sample and Duplicate relative percent differences;
- Surrogate recovery (organic analyses only); and
- Field duplicate relative percent difference.

Manual review was performed for the following items:

- Sample dilutions and reporting limits;
- Case Narratives; and
- Laboratory Duplicates

Data was generated by Shealy Environmental Services, Inc. – West Columbia, South Carolina. Data qualifiers were applied electronically to the database with any additional qualifiers added manually. A summary of the data as amended by data qualifiers is included with the original hard copy reports.

The attached table summarizes the data that were qualified due to QC deficiencies. The table indicates compounds/analytes qualified based on electronic and manual validation. Refer to the associated method section of the validation checklist for a detailed explanation of qualification. All other data in these SDGs are considered usable as reported.

HUNTER STEWART
ELECTRONIC VALIDATION REVIEW REPORT
SDG: MI01005
FST-39

The following list of data qualifiers and definitions were applied in accordance with qualification criteria defined in the greater than guidance documents:

UB Compound/analyte detected in blank or associated blank, qualified as a non-detect at listed value.

J The analyte was positively identified, but the associated numerical value is the approximate concentration of the analyte in the sample.

UJ The analyte was not detected greater- than the reporting limit; however, the reported quantitation limit is approximate and may, or may not represent the actual limit of quantitation necessary to accurately and precisely measure analyte in the sample.

R The sample result is rejected due to serious deficiencies in the ability to analyze the sample and meet quality control criteria; and the presence or absence of the analyte cannot be verified.

U Not detected at the quantitative reporting limit

DQM RUN BY:	Rachelle Borne	10/31/11
REVIEW PERFORMED BY:	Rachelle Borne	10/31/11
SIGNATURE:	Rachelle Borne	10/31/11
PEER REVIEW:	Todd Church	11/3/11

HUNTER STEWART
ELECTRONIC VALIDATION REVIEW REPORT
SDG: MI01005
FST-39

The following samples were included in this validation:

SDG	Sample ID	Sample Date	Parent Sample
MI01005	G4MW055(083011)	08/30/11	
MI01005	G4MW057(083011)	08/30/11	
MI01005	G4MW056(083111)	08/31/11	
MI01005	Trip Blank(083111)	08/31/11	

HUNTER STEWART
ELECTRONIC VALIDATION REVIEW REPORT
SDG: MI01005
FST-39

ANALYTICAL DATA PACKAGE DOCUMENTATION

GENERAL INFORMATION

Items Reviewed	Reported		Performance Acceptable		Not Required
	No	Yes	No	Yes	
1. Sample results		X		X	
2. Parameters analyzed		X		X	
3. Methods of analysis		X		X	
4. Reporting limits of analysis		X		X	
5. Master tracking list		X		X	
6. Sample collection date		X		X	
7. Laboratory sample received date		X		X	
8. Sample preparation/extraction date		X		X	
9. Sample analysis date		X		X	
10. Copy of chain-of-custody form signed by lab sample custodian		X		X	
11. Narrative summary of QA or sample problems provided		X		X	
12. Laboratory Signature		X		X	
13. South Carolina Certification Number		X		X	

QA - quality assurance

The analytical report was complete with the following exceptions or notations.

Note: The laboratory reported values between the quantitative reporting limit and the method detection limit as estimated concentrations. The "J" qualifier was retained in this validation. Non-detect values are reported at the quantitative reporting limit.

HUNTER STEWART
ELECTRONIC VALIDATION REVIEW REPORT
SDG: MI01005
FST-39

VOLATILE ORGANIC COMPOUNDS

Items Reviewed	DQM Deficiency		Qualification Applied	
	No	Yes	No	Yes
1. Holding times/Preservation	DQM		DQM	
2. Reporting limits	M		M	
3. Blanks				
A. Method blanks	DQM		DQM	
B. Equipment blanks	NA		NA	
C. Trip blanks	DQM		DQM	
4. Surrogate spike recoveries	DQM		DQM	
5. Laboratory control sample (LCS) A. LCS %R	DQM		DQM	
B. LCS duplicate (LCSD) %R	DQM		DQM	
C. LCS/LCSD RPD	DQM		DQM	
6. Matrix spike (MS)				
A. MS %R	NA		NA	
B. MS duplicate (MSD) %R	NA		NA	
C. MS/MSD precision (RPD)	NA		NA	
7. Field Duplicate precision (RPD)	NA		NA	

M – Manual Review %R - percent recovery RPD - relative percent difference
DQM – Data Qualification Module

Comments:
This section presents a discussion of any additions or changes to the electronic data validation for compounds analyzed by Method 8260B.

No qualification required.

SDG	Sample ID	Method	Analyte	Result	Units	Qualifier	Reason	Dilution
LK03046	B-2 (30-34')-20101102	SW8260	Bromomethane	<0.50	ug/l	UJ	LCS/LCSD RPD	1
LK03046	B-2 (30-34')-20101102	SW8260	Vinyl Chloride	<0.50	ug/l	UJ	LCS/LCSD RPD	1
LK03046	B-2 (30-34')-20101102	SW8260	Methyl acetate	<1.0	ug/l	UJ	LCS/LCSD RPD	1
LK03046	B-2 (36-40')-20101102	SW8260	Bromomethane	<0.50	ug/l	UJ	LCS/LCSD RPD	1
LK03046	B-2 (36-40')-20101102	SW8260	Vinyl Chloride	<0.50	ug/l	UJ	LCS/LCSD RPD	1
LK03046	B-2 (36-40')-20101102	SW8260	Methyl acetate	<1.0	ug/l	UJ	LCS/LCSD RPD	1
LK03046	B-2 (42-46')-20101102	SW8260	Bromomethane	<0.50	ug/l	UJ	LCS/LCSD RPD	1
LK03046	B-2 (42-46')-20101102	SW8260	Vinyl Chloride	<0.50	ug/l	UJ	LCS/LCSD RPD	1
LK03046	B-2 (42-46')-20101102	SW8260	Methyl acetate	<1.0	ug/l	UJ	LCS/LCSD RPD	1
LK03046	D-25 (30-34')-20101102	SW8260	Bromomethane	<5.0	ug/l	UJ	LCS/LCSD RPD	10
LK03046	D-25 (30-34')-20101102	SW8260	Vinyl Chloride	<5.0	ug/l	UJ	LCS/LCSD RPD	10
LK03046	D-25 (30-34')-20101102	SW8260	Methyl acetate	<10.0	ug/l	UJ	LCS/LCSD RPD	10
LK03046	D-25 (36-40')-20101102	SW8260	Methyl acetate	<1.0	ug/l	UJ	LCS/LCSD RPD	1
LK03046	D-25 (36-40')-20101102	SW8260	Bromomethane	<0.50	ug/l	UJ	LCS/LCSD RPD	1
LK03046	D-25 (36-40')-20101102	SW8260	Vinyl Chloride	0.81	ug/l	J	LCS/LCSD RPD	1

SDG	Sample ID	Method	Analyte	Result	Units	Qualifier	Reason	Dilution
LK03046	D-26 (33-35')-20101102	SW8260	Methyl acetate	<10.0	ug/l	UJ	LCS/LCSD RPD	10
LK03046	D-26 (33-35')-20101102	SW8260	Vinyl Chloride	<5.0	ug/l	UJ	LCS/LCSD RPD	10
LK03046	D-26 (33-35')-20101102	SW8260	Bromomethane	<5.0	ug/l	UJ	LCS/LCSD RPD	10
LK04016	B-5 (30-34')-20101103	SW8260	Vinyl Chloride	<0.50	ug/l	UJ	LCS/LCSD RPD	1
LK04016	B-5 (30-34')-20101103	SW8260	Methyl acetate	<1.0	ug/l	UJ	LCS/LCSD RPD	1
LK04016	B-5 (30-34')-20101103	SW8260	Bromomethane	<0.50	ug/l	UJ	LCS/LCSD RPD	1
LK04016	B-5 (36-40')-20101103	SW8260	Bromomethane	<0.50	ug/l	UJ	LCS/LCSD RPD	1
LK04016	B-5 (36-40')-20101103	SW8260	Vinyl Chloride	<0.50	ug/l	UJ	LCS/LCSD RPD	1
LK04016	B-5 (36-40')-20101103	SW8260	Methyl acetate	<1.0	ug/l	UJ	LCS/LCSD RPD	1
LK04016	B-5 (42-46')-20101103	SW8260	Toluene	0.69	ug/l	UB	Blank Contamination	1
LK04016	B-5 (42-46')-20101103	SW8260	Acetone	19	ug/l	UB	Blank Contamination	1
LK04016	C-12 (30-34')-20101103	SW8260	Vinyl Chloride	<0.50	ug/l	UJ	LCS/LCSD RPD	1
LK04016	C-12 (30-34')-20101103	SW8260	Methyl acetate	<1.0	ug/l	UJ	LCS/LCSD RPD	1
LK04016	C-12 (30-34')-20101103	SW8260	Bromomethane	<0.50	ug/l	UJ	LCS/LCSD RPD	1
LK04016	C-12 (30-34')-20101103	SW8260	Acetone	4.5	ug/l	UB	Blank Contamination	1

SDG	Sample ID	Method	Analyte	Result	Units	Qualifier	Reason	Dilution
LK04016	C-12 (36-40')-20101103	SW8260	Bromomethane	<0.50	ug/l	UJ	LCS/LCSD RPD	1
LK04016	C-12 (36-40')-20101103	SW8260	Vinyl Chloride	<0.50	ug/l	UJ	LCS/LCSD RPD	1
LK04016	C-12 (36-40')-20101103	SW8260	Methyl acetate	<1.0	ug/l	UJ	LCS/LCSD RPD	1
LK04016	C-12 (36-40')-20101103	SW8260	Acetone	9.1	ug/l	UB	Blank Contamination	1
LK04016	C-12 (42-46')-20101103	SW8260	1,2,4-Trichlorobenzene	1.7	ug/kg	UB	Blank Contamination	1
LK04016	D-25 (42-46')-20101102	SW8260	Toluene	1.8	ug/l	UB	Blank Contamination	1
LK04016	D-25 (42-46')-20101102	SW8260	Acetone	20	ug/l	UB	Blank Contamination	1
LK05005	C-14 (36-40')-20101104	SW8260	Carbon disulfide	0.6	ug/l	UB	Blank Contamination	2
LK05005	D-23 (30-34')-20101104	SW8260	Carbon disulfide	0.52	ug/l	UB	Blank Contamination	1
LK05005	D-23 (36-40')-20101104	SW8260	Carbon disulfide	0.7	ug/l	UB	Blank Contamination	1
LK05005	D-30 (30-34')-20101103	SW8260	Carbon disulfide	0.44	ug/l	UB	Blank Contamination	1
LK06009	DP-27 (30-34')-20101105	SW8260	Toluene	0.65	ug/l	UB	Blank Contamination	1
LK06009	DP-27 (30-34')-20101105	SW8260	Acetone	7.3	ug/l	UB	Blank Contamination	1
LK06009	DP-27 (36-40')-20101105	SW8260	Toluene	0.9	ug/l	UB	Blank Contamination	1
LK06009	DP-27 (36-40')-20101105	SW8260	Acetone	6.7	ug/l	UB	Blank Contamination	1

SDG	Sample ID	Method	Analyte	Result	Units	Qualifier	Reason	Dilution
LK06009	DP-27 (42-46')-20101105	SW8260	Acetone	15	ug/l	UB	Blank Contamination	1
LK06009	DP-28 (30-34')-20101105	SW8260	Toluene	0.66	ug/l	UB	Blank Contamination	1
LK06009	DP-28 (30-34')-20101105	SW8260	Acetone	7	ug/l	UB	Blank Contamination	1
LK06009	DP-28 (42-46')-20101105	SW8260	Acetone	30	ug/l	UB	Blank Contamination	1
LK10010	E-11 (36-40)-20101108	SW8260	Acetone	45	ug/l	UB	Blank Contamination	1
LK10010	E-11 (42-46)-20101108	SW8260	Acetone	20	ug/l	UB	Blank Contamination	1
LK10010	E-7 (30-34)-20101108	SW8260	Acetone	9.3	ug/l	UB	Blank Contamination	1
LK10010	E-7 (42-46)-20101108	SW8260	Acetone	47	ug/l	UB	Blank Contamination	1
LK10010	Trip Blank-20101110	SW8260	Cyclohexane	<0.50	ug/l	UJ	LCS/ICSD RPD	1
LK10010	Trip Blank-20101110	SW8260	Methyl acetate	<1.0	ug/l	UJ	LCS/ICSD RPD	1
LK10010	Trip Blank-20101110	SW8260	Methylene Chloride	<0.50	ug/l	UJ	LCS/ICSD RPD	1
LK10010	Trip Blank-20101110	SW8260	trans-1,2-Dichloroethene	<0.50	ug/l	UJ	LCS/ICSD RPD	1
LK10010	Trip Blank-20101110	SW8260	Carbon disulfide	<0.50	ug/l	UJ	LCS/ICSD RPD	1
LK10010	Trip Blank-20101110	SW8260	1,1-Dichloroethane	<0.50	ug/l	UJ	LCS/ICSD RPD	1
LK10010	Trip Blank-20101110	SW8260	cis-1,2-Dichloroethene	<0.50	ug/l	UJ	LCS/ICSD RPD	1

SDG	Sample ID	Method	Analyte	Result	Units	Qualifier	Reason	Dilution
LK10010	Trip Blank-20101110	SW8260	2-Butanone (MEK)	<10.0	ug/l	UJ	LCS/ICSD RPD	1
LK10010	Trip Blank-20101110	SW8260	Methyl tert-butyl ether	<0.50	ug/l	UJ	LCS/ICSD RPD	1
LK11004	Trip BlankA-20101110	SW8260	Methyl acetate	<1.0	ug/l	UJ	LCS/ICSD RPD	1
LK11004	Trip BlankA-20101110	SW8260	2-Butanone (MEK)	<10.0	ug/l	UJ	LCS/ICSD RPD	1
LK11004	Trip BlankA-20101110	SW8260	1,1-Dichloroethane	<0.50	ug/l	UJ	LCS/ICSD RPD	1
LK11004	Trip BlankA-20101110	SW8260	Carbon disulfide	0.37	ug/l	J	LCS/ICSD RPD	1
LK11004	Trip BlankA-20101110	SW8260	Methylene Chloride	<0.50	ug/l	UJ	LCS/ICSD RPD	1
LK11004	Trip BlankA-20101110	SW8260	Methyl tert-butyl ether	<0.50	ug/l	UJ	LCS/ICSD RPD	1
LK11004	Trip BlankA-20101110	SW8260	trans-1,2-Dichloroethene	<0.50	ug/l	UJ	LCS/ICSD RPD	1
LK11004	Trip BlankA-20101110	SW8260	Cyclohexane	<0.50	ug/l	UJ	LCS/ICSD RPD	1
LK11004	Trip BlankA-20101110	SW8260	cis-1,2-Dichloroethene	<0.50	ug/l	UJ	LCS/ICSD RPD	1

HUNTER STEWART
ELECTRONIC VALIDATION REVIEW REPORT
SDGs: LK03046, LK04016, LK05005, LK06009, LK10010 and LK11004
FST-39

Analytical data were evaluated in accordance with applicable USEPA SW-846 method requirements, "USEPA Contract Laboratory Program National Functional Guidelines for Organic Data Review" (October 1999), analytical method control criteria, the analytical laboratory Quality Assurance Control Limits, the Fort Stewart Military Reservation and Hunter Army Airfield Quality Assurance Project Plan (ARCADIS-2008), and professional judgment.

The data review summarized in this report includes a review of all sample collection documentation and the electronic data validation of the analytical data housed in the project database. Sample collection documentation included sample collection logs and chains of custody. The electronic data validation was performed utilizing the EQuIS Data Qualification Module (DQM). DQM checks for the following parameters:

- Holding times and preservation;
- Blank contamination;
    1. Method blanks,
    2. Trip blanks,
    3. Equipment blanks;
- Matrix spike and Duplicate sample recovery;
- Matrix Spike and Matrix Spike Duplicate relative percent differences;
- Laboratory Control Sample and Duplicate recovery;
- Laboratory Control Sample and Duplicate relative percent differences;
- Surrogate recovery (organic analyses only); and
- Field duplicate relative percent difference.

Manual review was performed for the following items:

- Sample dilutions and reporting limits;
- Case Narratives; and
- Laboratory Duplicates

Data was generated by Shealy Environmental Services, Inc. – West Columbia, South Carolina. Data qualifiers were applied electronically to the database with any additional qualifiers added manually. A summary of the data as amended by data qualifiers is included with the original hard copy reports.

The attached table summarizes the data that were qualified due to QC deficiencies. The table indicates compounds/analytes qualified based on electronic and manual validation. Refer to the associated method section of the validation checklist for a detailed explanation of qualification. All other data in these SDGs are considered usable as reported.

HUNTER STEWART
ELECTRONIC VALIDATION REVIEW REPORT
SDGs: LK03046, LK04016, LK05005, LK06009, LK10010 and LK11004
FST-39

The following list of data qualifiers and definitions were applied in accordance with qualification criteria defined in the greater than guidance documents:

UB Compound/analyte detected in blank or associated blank, qualified as a non-detect at listed value.

J The analyte was positively identified, but the associated numerical value is the approximate concentration of the analyte in the sample.

UJ The analyte was not detected greater than the reporting limit; however, the reported quantitation limit is approximate and may, or may not represent the actual limit of quantitation necessary to accurately and precisely measure analyte in the sample.

R The sample result is rejected due to serious deficiencies in the ability to analyze the sample and meet quality control criteria; and the presence or absence of the analyte cannot be verified.

U Not detected at the quantitative reporting limit

DQM RUN BY:	Rachelle Borne	01/18/11
REVIEW PERFORMED BY:	Rachelle Borne	01/20/11
SIGNATURE:	Rachelle Borne	01/20/11
PEER REVIEW:	Dennis Capria	1/27/2011

HUNTER STEWART
ELECTRONIC VALIDATION REVIEW REPORT
SDGs: LK03046, LK04016, LK05005, LK06009, LK10010 and LK11004
FST-39

The following samples were included in this validation:

SDG	Sample ID	Sample Date	Parent Sample
LK03046	B-2 (30-34')-20101102	11/2/2010	
LK03046	B-2 (36-40')-20101102	11/2/2010	
LK03046	B-2 (42-46')-20101102	11/2/2010	
LK03046	D-25 (30-34')-20101102	11/2/2010	
LK03046	D-25 (36-40')-20101102	11/2/2010	
LK03046	D-26 (33-35')-20101102	11/2/2010	
LK03046	Trip Blank-20101103	11/3/2010	
LK04016	Trip Blank-20101104	11/4/2010	
LK04016	B-5 (30-34')-20101103	11/3/2010	
LK04016	B-5 (36-40')-20101103	11/3/2010	
LK04016	B-5 (42-46')-20101103	11/3/2010	
LK04016	C-12 (30-34')-20101103	11/3/2010	
LK04016	C-12 (36-40')-20101103	11/3/2010	
LK04016	C-12 (42-46')-20101103	11/3/2010	
LK04016	D-25 (42-46')-20101102	11/2/2010	
LK05005	C-14 (30-34')-20101104	11/4/2010	
LK05005	C-14 (36-40')-20101104	11/4/2010	
LK05005	C-14 (42-46')-20101104	11/4/2010	
LK05005	D-23 (30-34')-20101104	11/4/2010	
LK05005	D-23 (36-40')-20101104	11/4/2010	
LK05005	D-23 (42-46')-20101104	11/4/2010	
LK05005	D-30 (30-34')-20101103	11/3/2010	
LK05005	D-30 (36-40')-20101103	11/3/2010	
LK05005	D-30 (42-46')-20101103	11/3/2010	
LK05005	Trip Blank-20101105	11/5/2010	
LK06009	DP-27 (30-34')-20101105	11/5/2010	
LK06009	DP-27 (36-40')-20101105	11/5/2010	
LK06009	DP-27 (42-46')-20101105	11/5/2010	
LK06009	DP-28 (30-34')-20101105	11/5/2010	
LK06009	DP-28 (42-46')-20101105	11/5/2010	
LK06009	TRIP BLANK-20101106	11/6/2010	
LK10010	E-11 (30-34)-20101108	11/8/2010	
LK10010	E-11 (36-40)-20101108	11/8/2010	
LK10010	E-11 (42-46)-20101108	11/8/2010	
LK10010	E-7 (30-34)-20101108	11/8/2010	
LK10010	E-7 (42-46)-20101108	11/8/2010	
LK11004	B-6 (30-34)-20101109	11/9/2010	
LK11004	B-6 (36-40)-20101109	11/9/2010	
LK11004	E-10 (30-34)-20101110	11/10/2010	
LK11004	E-10 (36-40)-20101110	11/10/2010	
LK11004	E-10 (42-46)-20101110	11/10/2010	
LK11004	E-8 (30-34)-20101109	11/9/2010	

HUNTER STEWART
ELECTRONIC VALIDATION REVIEW REPORT
SDGs: LK03046, LK04016, LK05005, LK06009, LK10010 and LK11004
FST-39

SDG	Sample ID	Sample Date	Parent Sample
LK11004	E-8 (36-40)-20101109	11/9/2010	
LK11004	E-8 (42-46)-20101109	11/9/2010	
LK11004	E-9 (30-34)-20101110	11/10/2010	
LK11004	E-9 (36-40)-20101110	11/10/2010	
LK11004	E-9 (42-46)-20101110	11/10/2010	
LK11004	Trip Blank-20101110	11/10/2010	
LK12004	FB6-SL-20101111	11/11/2010	

HUNTER STEWART
ELECTRONIC VALIDATION REVIEW REPORT
SDGs: LK03046, LK04016, LK05005, LK06009, LK10010 and LK11004
FST-39

ANALYTICAL DATA PACKAGE DOCUMENTATION

GENERAL INFORMATION

Items Reviewed	Reported		Performance Acceptable		Not Required
	No	Yes	No	Yes	
1. Sample results		X		X	
2. Parameters analyzed		X		X	
3. Methods of analysis		X		X	
4. Reporting limits of analysis		X		X	
5. Master tracking list		X		X	
6. Sample collection date		X		X	
7. Laboratory sample received date		X		X	
8. Sample preparation/extraction date		X		X	
9. Sample analysis date		X		X	
10. Copy of chain-of-custody form signed by lab sample custodian		X		X	
11. Narrative summary of QA or sample problems provided		X		X	
12. Laboratory Signature		X		X	
13. South Carolina Certification Number		X		X	

QA - quality assurance

The analytical report was complete with the following exceptions or notations.

Note: The laboratory reported values between the quantitative reporting limit and the method detection limit as estimated concentrations. The "J" qualifier was retained in this validation. Non-detect values are reported at the quantitative reporting limit.

HUNTER STEWART
ELECTRONIC VALIDATION REVIEW REPORT
SDGs: LK03046, LK04016, LK05005, LK06009, LK10010 and LK11004
FST-39

VOLATILE ORGANIC COMPOUNDS

Items Reviewed	DQM Deficiency		Qualification Applied	
	No	Yes	No	Yes
1. Holding times/Preservation	DQM		DQM	
2. Reporting limits	M		M	
3. Blanks				
A. Method blanks		DQM		DQM
B. Equipment blanks	NA		NA	
C. Trip blanks		DQM		DQM
4. Surrogate spike recoveries	DQM		DQM	
5. Laboratory control sample (LCS) A. LCS %R		DQM		DQM
B. LCS duplicate (LCSD) %R	DQM		DQM	
C. LCS/LCSD RPD		DQM		DQM
6. Matrix spike (MS)				
A. MS %R	NA		NA	
B. MS duplicate (MSD) %R	NA		NA	
C. MS/MSD precision (RPD)	NA		NA	
7. Field Duplicate precision (RPD)	NA		NA	

M – Manual Review %R - percent recovery RPD - relative percent difference DQM – Data Qualification Module

Comments:
This section presents a discussion of any additions or changes to the electronic data validation for compounds analyzed by Method 8260B.

Note: SDG (LK04016) Sample locations D-25(42-26), C-12(42-46) and B-5(30-34) were received in VOA vials preserved with hydrochloric acid; however, the samples were too muddy to be analyzed as waters. Per ARCADIS the samples were analyzed and reported as solids.

2. Several samples required dilutions due to elevated concentrations of target analytes. There were elevated reporting limits for non-detect results.

3A. SDG (LK04016) Bromoform and 1,2,4-tichlorobenzene were detected in the method blank for batch 46104. The associated field samples were qualified as non-detect for these compounds if the sample concentrations were less than five times the blank values.

SDG (LK04016) Toluene was detected in the method blank for batch 46137. The associated field samples were qualified as non-detect for this compound if the sample concentrations were less than five times the blank value.

SDG (LK06009) Toluene was detected in the method blank for batch 46375. The associated field samples were qualified as non-detect for this compound if the sample concentrations were less than five times the blank value.

3C. SDG (LK04016) Acetone and bromoform were detected in the trip blank. The associated field samples were qualified as non-detect for these compounds if the sample concentrations were less than ten times the blank values for acetone and less than five times the blank values for bromoform.

SDG (LK05005) Carbon disulfide was detected in the trip blank. The associated field samples were qualified as non-detect for this compound if the sample concentrations were less than five times the blank value.

SDG (LK06009) Acetone was detected in the trip blank. The associated field samples were qualified as non-detect for this compound if the sample concentrations were less than ten times the blank value.

SDG (LK10010) Acetone was detected in the trip blank. The associated field samples were qualified as non-detect for this compound if the sample concentrations were less than ten times the blank value.

SDG (LK11004) Carbon disulfide and 1,2,4-trichlorobenzene were detected in the trip blank. The associated field samples were non-detect for these compounds; therefore, qualification of the data was not warranted.

5. SDG (LK03046, LK04016 and LK05005) The recovery of methyl acetate was above the control limit in the LCS for batch 45932. The associated field samples were non-detect for methyl acetate; therefore, qualification of the data was not warranted. The RPDs between the LCS/LCSD pair were above the control limit for methyl acetate, bromomethane and vinyl chloride. The associated field samples were qualified as estimated for these compounds.

   SDG (LK10010 and LK11004) The RPDs between the LCS/LCSD pair were above the control limit for 2-butanone, carbon disulfide, cyclohexane, 1,1-dichloroethane, trans-1,2-dichloroethene, cis-1,2-dichloroethene, methyl acetate, MTBE and methylene chloride for batch 46389. The associated field sample was qualified as estimated for these compounds.

Hunter Stewart
FST-39

SDG	Sample ID	Method	Analyte	Result	Units	Qualifier	Reason	Dilution
LI17017	F39TWW13 (30-35)	SW8260	Bromomethane	<0.50	ug/l	UJ	LCS/LCSD Recovery	1
LI17017	F39TWW13 (35-40)	SW8260	Bromomethane	<2.5	ug/l	UJ	LCS/LCSD Recovery	5
LI17017	F39TWW13 (40-45)	SW8260	Bromomethane	<0.50	ug/l	UJ	LCS/LCSD Recovery	1
LI17017	F39TWW13 (40-45)	SW8260	Acetone	10	ug/l	UB	Blank Contamination	1
LI17017	F39TWW13 (45-50)	SW8260	Bromomethane	<0.50	ug/l	UJ	LCS/LCSD Recovery	1
LI17017	F39TWW13 (50-55)	SW8260	Bromomethane	<0.50	ug/l	UJ	LCS/LCSD Recovery	1
LI17017	F39TWW13 -DUP	SW8260	Bromomethane	<0.50	ug/l	UJ	LCS/LCSD Recovery	1
LI17017	Trip Blank	SW8260	Bromomethane	<0.50	ug/l	UJ	LCS/LCSD Recovery	1

HUNTER STEWART
ELECTRONIC VALIDATION REVIEW REPORT
SDGs: LI17017 and LI16010
FST-39

Analytical data were evaluated in accordance with applicable USEPA SW-846 method requirements, "USEPA Contract Laboratory Program National Functional Guidelines for Organic Data Review" (October 1999), analytical method control criteria, the analytical laboratory Quality Assurance Control Limits, the Fort Stewart Military Reservation and Hunter Army Airfield Quality Assurance Project Plan (ARCADIS-2008), and professional judgment.

The data review summarized in this report includes a review of all sample collection documentation and the electronic data validation of the analytical data housed in the project database. Sample collection documentation included sample collection logs and chains of custody. The electronic data validation was performed utilizing the EQuIS Data Qualification Module (DQM). DQM checks for the following parameters:

- Holding times and preservation;
- Blank contamination;
    1. Method blanks,
    2. Trip blanks,
    3. Equipment blanks;
- Matrix spike and Duplicate sample recovery;
- Matrix Spike and Matrix Spike Duplicate relative percent differences;
- Laboratory Control Sample and Duplicate recovery;
- Laboratory Control Sample and Duplicate relative percent differences;
- Surrogate recovery (organic analyses only); and
- Field duplicate relative percent difference.

Manual review was performed for the following items:

- Sample dilutions and reporting limits;
- Case Narratives; and
- Laboratory Duplicates

Data was generated by Shealy Environmental Services, Inc. – West Columbia, South Carolina and Test America – Savannah Laboratories. Data qualifiers were applied electronically to the database with any additional qualifiers added manually. A summary of the data as amended by data qualifiers is included with the original hard copy reports.

The attached table summarizes the data that were qualified due to QC deficiencies. The table indicates compounds/analytes qualified based on electronic and manual validation. Refer to the associated method section of the validation checklist for a detailed explanation of qualification. All other data in these SDGs are considered usable as reported.

HUNTER STEWART
ELECTRONIC VALIDATION REVIEW REPORT
SDGs: LI17017 and LI16010
FST-39

The following list of data qualifiers and definitions were applied in accordance with qualification criteria defined in the greater than guidance documents:

UB Compound/analyte detected in blank or associated blank, qualified as a non-detect at listed value.

J The analyte was positively identified, but the associated numerical value is the approximate concentration of the analyte in the sample.

UJ The analyte was not detected greater than the reporting limit; however, the reported quantitation limit is approximate and may, or may not represent the actual limit of quantitation necessary to accurately and precisely measure analyte in the sample.

R The sample result is rejected due to serious deficiencies in the ability to analyze the sample and meet quality control criteria; and the presence or absence of the analyte cannot be verified.

U Not detected at the quantitative reporting limit

DQM RUN BY:	Rachelle Borne	09/27/10
REVIEW PERFORMED BY:	Rachelle Borne	09/27/10
SIGNATURE:	Rachelle Borne	09/27/10
PEER REVIEW:	Dennis Capria	09/28/10

HUNTER STEWART
ELECTRONIC VALIDATION REVIEW REPORT
SDGs: LI17017 and LI16010
FST-39

The following samples were included in this validation:

SDG	Sample ID	Sample Date	Parent Sample
LI16010	F39TWS13 (30-32)(091410)	9/14/2010	
LI16010	F39TWS13 (32-34)(091410)	9/14/2010	
LI16010	F39TWS13 (34-36)(091410)	9/14/2010	
LI16010	F39TWS13 (36-38)(091410)	9/14/2010	
LI16010	F39TWS13 (38-40)(091410)	9/14/2010	
LI16010	F39TWS13 (40-42)(091410)	9/14/2010	
LI16010	F39TWS13 (42-44)(091410)	9/14/2010	
LI16010	F39TWS13 (44-46)(091410)	9/14/2010	
LI16010	F39TWS13 (46-48)(091410)	9/14/2010	
LI16010	F39TWS13 (48-50)(091410)	9/14/2010	
LI16010	F39TWS13 (50-52)(091410)	9/14/2010	
LI16010	F39TWS13 (52-54)(091410)	9/14/2010	
LI16010	F39TWS13 (54-56)(091410)	9/14/2010	
LI16010	F39TWS13 (56-58)(091410)	9/14/2010	
LI16010	F39TWS13 (58-60)(091410)	9/14/2010	
LI16010	F39TWS13 (60-62)(091410)	9/14/2010	
LI16010	F39TWS13 (62-64)(091410)	9/14/2010	
LI16010	F39TWS13 (64-66)(091410)	9/14/2010	
LI16010	F39TWS13 (66-68)(091410)	9/14/2010	
LI16010	F39TWS13 (68-70)(091410)	9/14/2010	
LI17017	F39TWW13 (30-35)	9/15/2010	
LI17017	F39TWW13 (35-40)	9/15/2010	
LI17017	F39TWW13 (40-45)	9/15/2010	
LI17017	F39TWW13 (45-50)	9/15/2010	
LI17017	F39TWW13 (50-55)	9/15/2010	
LI17017	Trip Blank	9/15/2010	
LI17017	F39TWW13 -DUP	9/15/2010	F39TWW13 (40-45)

HUNTER STEWART
ELECTRONIC VALIDATION REVIEW REPORT
SDGs: LI17017 and LI16010
FST-39

ANALYTICAL DATA PACKAGE DOCUMENTATION

GENERAL INFORMATION

Items Reviewed	Reported		Performance Acceptable		Not Required
	No	Yes	No	Yes	
1. Sample results		X		X	
2. Parameters analyzed		X		X	
3. Methods of analysis		X		X	
4. Reporting limits of analysis		X		X	
5. Master tracking list		X		X	
6. Sample collection date		X		X	
7. Laboratory sample received date		X		X	
8. Sample preparation/extraction date		X		X	
9. Sample analysis date		X		X	
10. Copy of chain-of-custody form signed by lab sample custodian		X		X	
11. Narrative summary of QA or sample problems provided		X		X	
12. Laboratory Signature		X		X	
13. South Carolina Certification Number		X		X	

QA - quality assurance

The analytical report was complete with the following exceptions or notations.

Note: The laboratory reported values between the quantitative reporting limit and the method detection limit as estimated concentrations. The "J" qualifier was retained in this validation. Non-detect values are reported at the quantitative reporting limit.

HUNTER STEWART
ELECTRONIC VALIDATION REVIEW REPORT
SDGs: LI17017 and LI16010
FST-39

VOLATILE ORGANIC COMPOUNDS

Items Reviewed	DQM Deficiency		Qualification Applied	
	No	Yes	No	Yes
1. Holding times/Preservation	DQM		DQM	
2. Reporting limits	M		M	
3. Blanks				
A. Method blanks	DQM		DQM	
B. Equipment blanks	NA		NA	
C. Trip blanks		DQM		DQM
4. Surrogate spike recoveries	DQM		DQM	
5. Laboratory control sample (LCS) A. LCS %R		DQM		DQM
B. LCS duplicate (LCSD) %R		DQM		DQM
C. LCS/LCSD RPD	DQM		DQM	
6. Matrix spike (MS)				
A. MS %R	NA		NA	
B. MS duplicate (MSD) %R	NA		NA	
C. MS/MSD precision (RPD)	NA		NA	
7. Field Duplicate precision (RPD)	DQM		DQM	

M – Manual Review %R - percent recovery RPD - relative percent difference DQM – Data Qualification Module

Comments:
This section presents a discussion of any additions or changes to the electronic data validation for compounds analyzed by Method 8260B.

2. SDG (LD09018) Several samples required dilutions due to elevated concentrations of target analytes. There were elevated reporting limits for non-detect results.

3C. SDG (LI17017) Acetone was detected in the trip blank. The associated field samples were qualified as non-detect for acetone if the sample concentration was less than ten times the blank value.

5. SDG (LI17017) The recovery of the compound bromomethane was below the control limit in the LCS and the LCSD. The associated field samples were qualified as estimated for bromomethane.

7. SDG (LI17017) Sample location F39TWW13-DUP was collected as a field duplicate of F39TWW13(40-45). The RPDs were acceptable at less than 40%.

HUNTER STEWART
ELECTRONIC VALIDATION REVIEW REPORT
SDGs: LC13017, LC17068, LC20005, LD01022, LD09009, LD09018 and LD14020
FST-39

Analytical data were evaluated in accordance with applicable USEPA SW-846 method requirements, "USEPA Contract Laboratory Program National Functional Guidelines for Organic Data Review" (October 1999), analytical method control criteria, the analytical laboratory Quality Assurance Control Limits, the Fort Stewart Military Reservation and Hunter Army Airfield Quality Assurance Project Plan (ARCADIS-2008), and professional judgment.

The data review summarized in this report includes a review of all sample collection documentation and the electronic data validation of the analytical data housed in the project database. Sample collection documentation included sample collection logs and chains of custody. The electronic data validation was performed utilizing the EQuIS Data Qualification Module (DQM). DQM checks for the following parameters:

- Holding times and preservation;
- Blank contamination;
    1. Method blanks,
    2. Trip blanks,
    3. Equipment blanks;
- Matrix spike and Duplicate sample recovery;
- Matrix Spike and Matrix Spike Duplicate relative percent differences;
- Laboratory Control Sample and Duplicate recovery;
- Laboratory Control Sample and Duplicate relative percent differences;
- Surrogate recovery (organic analyses only); and
- Field duplicate relative percent difference.

Manual review was performed for the following items:

- Sample dilutions and reporting limits;
- Case Narratives; and
- Laboratory Duplicates

Data was generated by Shealy Environmental Services, Inc. – West Columbia, South Carolina and Test America – Savannah Laboratories. Data qualifiers were applied electronically to the database with any additional qualifiers added manually. A summary of the data as amended by data qualifiers is included with the original hard copy reports.

The attached table summarizes the data that were qualified due to QC deficiencies. The table indicates compounds/analytes qualified based on electronic and manual validation. Refer to the associated method section of the validation checklist for a detailed explanation of qualification. All other data in these SDGs are considered usable as reported.

HUNTER STEWART
ELECTRONIC VALIDATION REVIEW REPORT
SDGs: LC13017, LC17068, LC20005, LD01022, LD09009, LD09018 and LD14020
FST-39

The following list of data qualifiers and definitions were applied in accordance with qualification criteria defined in the greater than guidance documents:

UB Compound/analyte detected in blank or associated blank, qualified as a non-detect at listed value.

J The analyte was positively identified, but the associated numerical value is the approximate concentration of the analyte in the sample.

UJ The analyte was not detected greater than the reporting limit; however, the reported quantitation limit is approximate and may, or may not represent the actual limit of quantitation necessary to accurately and precisely measure analyte in the sample.

R The sample result is rejected due to serious deficiencies in the ability to analyze the sample and meet quality control criteria; and the presence or absence of the analyte cannot be verified.

U Not detected at the quantitative reporting limit

DQM RUN BY:	Rachelle Borne	06/15/10
REVIEW PERFORMED BY:	Rachelle Borne	06/15/10
SIGNATURE:	Rachelle Borne	06/16/10
PEER REVIEW:	Dennis Capria	06/21/10

HUNTER STEWART
ELECTRONIC VALIDATION REVIEW REPORT
SDGs: LC13017, LC17068, LC20005, LD01022, LD09009, LD09018 and LD14020
FST-39

The following samples were included in this SDG:

SDG	Sample ID	Sample Date	Parent Sample
LC13017	DUP-5 (031110)	3/11/2010	G4MW027 (031110)
LC13017	G4MW006 (031210)	3/12/2010	
LC13017	G4MW010 (031210)	3/12/2010	
LC13017	G4MW011 (031110)	3/11/2010	
LC13017	G4MW016 (031010)	3/10/2010	
LC13017	G4MW017 (031010)	3/10/2010	
LC13017	G4MW018 (031210)	3/12/2010	
LC13017	G4MW019 (031010)	3/10/2010	
LC13017	G4MW020 (031010)	3/10/2010	
LC13017	G4MW023 (031010)	3/10/2010	
LC13017	G4MW024 (031010)	3/10/2010	
LC13017	G4MW025 (031010)	3/10/2010	
LC13017	G4MW027 (031110)	3/11/2010	
LC13017	G4MW028 (031110)	3/11/2010	
LC13017	G4MW029 (031110)	3/11/2010	
LC13017	G4MW031 (031010)	3/10/2010	
LC13017	TRIP BLANK (031010)	3/12/2010	
LC17068	DUP-2 (031810)	3/18/2010	F39SB008 (4-5)
LC17068	F39SB001 (4.5-5.5)	3/15/2010	
LC17068	F39SB002 (4-5)	3/18/2010	
LC17068	F39SB003 (4-5)	3/15/2010	
LC17068	F39SB004 (4-5)	3/15/2010	
LC17068	F39SB005 (4-5)	3/15/2010	
LC17068	F39SB006 (4-5)	3/15/2010	
LC17068	F39SB007 (4-5)	3/15/2010	
LC17068	F39SB008 (4-5)	3/18/2010	
LC17068	F39SB009 (0.5-1)	3/15/2010	
LC17068	F39SB009 (3.0-3.5)	3/15/2010	
LC17068	F39SB010 (0.5-1.0)	3/16/2010	
LC17068	F39SB010 (3.0-3.5)	3/16/2010	
LC17068	F39SB011 (0.5-1.0)	3/16/2010	
LC17068	F39SB011 (3.0-3.5)	3/16/2010	
LC17068	F39SB012 (0.5-1.0)	3/16/2010	
LC17068	F39SB012 (3.0-3.5)	3/16/2010	
LC17068	TRIP BLANK (031610)	3/17/2010	
LC20005	Trip Blank (031810)	3/20/2010	
LC20005	F39TW01 (40-45)	3/18/2010	
LD01022	DUP-3 (033010)	3/30/2010	F39TW02 (20-25)
LD01022	F39TW01 (10-15)	3/31/2010	
LD01022	F39TW01 (20-25)	3/30/2010	
LD01022	F39TW01 (30-35)	3/30/2010	
LD01022	F39TW02 (10-15)	3/30/2010	

HUNTER STEWART
ELECTRONIC VALIDATION REVIEW REPORT
SDGs: LC13017, LC17068, LC20005, LD01022, LD09009, LD09018 and LD14020
FST-39

SDG	Sample ID	Sample Date	Parent Sample
LD01022	F39TW02 (20-25)	3/30/2010	
LD01022	F39TW02 (30-35)	3/30/2010	
LD01022	F39TW02 (40-45)	3/30/2010	
LD01022	F39TW03 (10-15)	3/31/2010	
LD01022	F39TW03 (20-25)	3/31/2010	
LD01022	F39TW03 (30-35)	3/31/2010	
LD01022	F39TW03 (40-45)	3/31/2010	
LD01022	F39TW04 (10-15)	4/1/2010	
LD01022	F39TW04 (20-25)	4/1/2010	
LD01022	F39TW04 (30-35)	4/1/2010	
LD01022	F39TW04 (40-45)	4/1/2010	
LD01022	TRIP BLANK (033110)	4/1/2010	
LD01022	Trip Blank (040110)	4/6/2010	
LD09009	G4MW033 (040710)	4/7/2010	
LD09009	G4MW034 (040610)	4/6/2010	
LD09009	G4MW035 (040610)	4/6/2010	
LD09009	G4MW036 (040610)	4/6/2010	
LD09009	Trip Blank (040810)	4/8/2010	
LD09018	F39SED08 (040810)	4/8/2010	
LD09018	F39SW-01 (040810)	4/8/2010	
LD09018	F39SW-02 (040810)	4/8/2010	
LD09018	F39SW-03 (040810)	4/8/2010	
LD09018	F39SW-04 (040810)	4/8/2010	
LD09018	F39SW-05 (040810)	4/8/2010	
LD09018	F39SW-06 (040810)	4/8/2010	
LD09018	F39SW-07 (040810)	4/8/2010	
LD09018	F39TW05 (10-15)	4/5/2010	
LD09018	F39TW05 (20-25)	4/6/2010	
LD09018	F39TW05 (30-35)	4/6/2010	
LD09018	F39TW05 (40-45)	4/5/2010	
LD09018	F39TW06 (10-15)	4/6/2010	
LD09018	F39TW06 (20-25)	4/7/2010	
LD09018	F39TW06 (30-35)	4/7/2010	
LD09018	F39TW06 (40-45)	4/6/2010	
LD09018	F39TW07 (10-15)	4/7/2010	
LD09018	F39TW07 (20-25)	4/8/2010	
LD09018	F39TW07 (30-35)	4/8/2010	
LD09018	F39TW07 (40-45)	4/7/2010	
LD09018	F39TW08 (10-15)	4/8/2010	
LD09018	F39TW08 (20-25)	4/8/2010	
LD09018	F39TW08 (30-35)	4/8/2010	
LD09018	F39TW08 (40-45)	4/8/2010	
LD09018	TRIP BLANK (040910)	4/9/2010	

HUNTER STEWART
ELECTRONIC VALIDATION REVIEW REPORT
SDGs: LC13017, LC17068, LC20005, LD01022, LD09009, LD09018 and LD14020
FST-39

SDG	Sample ID	Sample Date	Parent Sample
LD09018	DUP01 (040810)	4/8/2010	F39SW-01 (040810)
LD09018	DUP-4 (040710)	4/7/2010	F39TW06 (30-35)
LD09018	F39SED01 (040810)	4/8/2010	
LD09018	F39SED02 (040810)	4/8/2010	
LD09018	F39SED03 (040810)	4/8/2010	
LD09018	F39SED04 (040810)	4/8/2010	
LD09018	F39SED05 (040810)	4/8/2010	
LD09018	F39SED06 (040810)	4/8/2010	
LD09018	F39SED07 (040810)	4/8/2010	
LD14020	F39TW09 (10-15)	4/12/2010	
LD14020	F39TW09 (20-25)	4/12/2010	
LD14020	F39TW09 (30-35)	4/12/2010	
LD14020	F39TW09 (40-45)	4/12/2010	
LD14020	F39TW10 (10-15)	4/13/2010	
LD14020	F39TW10 (20-25)	4/13/2010	
LD14020	F39TW10 (30-35)	4/13/2010	
LD14020	F39TW10 (40-45)	4/13/2010	
LD14020	F39TW11 (10-15)	4/14/2010	
LD14020	F39TW11 (20-25)	4/14/2010	
LD14020	F39TW11 (30-35)	4/14/2010	
LD14020	F39TW11 (40-45)	4/14/2010	
LD14020	F39TW12 (10-15)	4/14/2010	
LD14020	F39TW12 (20-25)	4/14/2010	
LD14020	F39TW12 (30-35)	4/14/2010	
LD14020	F39TW12 (40-45)	4/14/2010	
LD14020	Trip Blank (041410)	4/14/2010	

HUNTER STEWART
ELECTRONIC VALIDATION REVIEW REPORT
SDGs: LC13017, LC17068, LC20005, LD01022, LD09009, LD09018 and LD14020
FST-39

ANALYTICAL DATA PACKAGE DOCUMENTATION

GENERAL INFORMATION

Items Reviewed	Reported		Performance Acceptable		Not Required
	No	Yes	No	Yes	
1. Sample results		X		X	
2. Parameters analyzed		X		X	
3. Methods of analysis		X		X	
4. Reporting limits of analysis		X		X	
5. Master tracking list		X		X	
6. Sample collection date		X		X	
7. Laboratory sample received date		X		X	
8. Sample preparation/extraction date		X		X	
9. Sample analysis date		X		X	
10. Copy of chain-of-custody form signed by lab sample custodian		X		X	
11. Narrative summary of QA or sample problems provided		X		X	
12. Laboratory Signature		X		X	
13. South Carolina Certification Number		X		X	

QA - quality assurance

The analytical report was complete with the following exceptions or notations.

Note: The laboratory reported values between the quantitative reporting limit and the method detection limit as estimated concentrations. The "J" qualifier was retained in this validation. Non-detect values are reported at the quantitative reporting limit.

VOLATILE ORGANIC COMPOUNDS

Items Reviewed	DQM Deficiency		Qualification Applied	
	No	Yes	No	Yes
1. Holding times/Preservation	DQM		DQM	
2. Reporting limits	M		M	
3. Blanks				
A. Method blanks		DQM		DQM
B. Equipment blanks	NA		NA	
C. Trip blanks		DQM		DQM
4. Surrogate spike recoveries	DQM		DQM	
5. Laboratory control sample (LCS) A. LCS %R		DQM		DQM
B. LCS duplicate (LCSD) %R		DQM		DQM
C. LCS/LCSD RPD		DQM		DQM
6. Matrix spike (MS)				
A. MS %R		DQM		DQM
B. MS duplicate (MSD) %R		DQM		DQM
C. MS/MSD precision (RPD)		DQM		DQM
7. Field Duplicate precision (RPD)		DQM		DQM

M – Manual Review %R - percent recovery RPD - relative percent difference DQM – Data Qualification Module

Comments:
This section presents a discussion of any additions or changes to the electronic data validation for compounds analyzed by Method 8260B.

2. SDG (LD09018) Several samples required dilutions due to elevated concentrations of target analytes. There were elevated reporting limits for non-detect results.

3A. SDG (LC17068) The compound carbon disulfide was detected in the method blank for batch 3000. The associated field samples were non-detect for this compound; therefore, qualification of the data is not warranted.

SDG (LC20005) The compound carbon disulfide was detected in the method blank. The associated field samples were qualified as non-detect for carbon disulfide if the sample concentration was less than five times the blank value.

SDG (LD01022) The compound methylene chloride was detected in the method blank for batches 30893, 30899 and 31061. The associated field samples were qualified as non-detect for this compound if the sample concentration was less than ten times the blank result.

SDG (LD09009) The compound methylene chloride was detected in the method blank. The associated field samples were qualified as non-detect for this compound if the sample concentration was less than ten times the blank result.

SDG (LD09018) The compound methylene chloride was detected in the method blank for batches 31466 and 31526. The associated field samples were qualified as non-detect for this compound if the sample concentration was less than ten times the blank result.

SDG (LD09018) The compound 2-hexanone was detected in the method blank for batch 31760. The associated field samples were non-detect for this compound; therefore, qualification of the data is not warranted.

SDG (LD14020) The compound methylene chloride was detected in the method blank for batch 31703. The associated field samples were qualified as non-detect for this compound if the sample concentration was less than ten times the blank result.

SDG (LD14020) The compound acetone was detected in the method blank for batch 31987. The associated field samples were qualified as non-detect for this compound if the sample concentration was less than ten times the blank result.

3C. SDGs (LC17068 and LC13017) The compound acetone was detected in the trip blank. The associated field samples were qualified as non-detect for acetone if the sample concentration was less than ten times the blank value.

SDG (LC20005) The compounds acetone and carbon disulfide were detected in the trip blank. The associated field sample was qualified as non-detect for these compounds if the sample concentration was less than five times the blank value for carbon disulfide and less than ten times the blank value for acetone.

SDG (LD01022) The compounds acetone and carbon disulfide were detected in Trip Blank (033110). The associated field sample was qualified as non-detect for these compounds if the sample concentration was less than five times the blank value for carbon disulfide and less than ten times the blank value for acetone.

SDG (LD01022) The compound methylene chloride was detected in Trip Blank(040110). The associated field sample were qualified as non-detect for this compound if the sample concentration was less than ten times the blank result.

SDG (LD09009) The compounds acetone and methylene chloride were detected in the trip blank. The associated field samples were qualified as non-detect for these compounds if the sample result was less than ten times the blank result.

SDG (LD09018) The compounds acetone and methylene chloride were detected in the trip blanks. The associated field samples were qualified as non-detect for these compounds if the sample result was less than ten times the blank result.

SDG (LD14020) The compounds acetone, methylene chloride, carbon disulfide and vinyl chloride were detected in one or more of the trip blanks. The associated field samples were qualified as non-detect for these compounds if the sample result was less than ten times the blank result for methylene chloride and acetone and less than five times the blank result for carbon disulfide and vinyl chloride.

5. SDG (LC17068) The RPDs between the LCS/LCSD pair were above the control limit for several compounds for batch 29863. The associated field samples were qualified as estimated for these compounds. See the attached qualification summary for details of the qualifications.

SDG (LC17068) The recovery of the compound bromoform was below the control limit in the LCS for batch 29887. The associated field samples were qualified as estimated for bromoform.

SDG (LC17068) The recovery of chloroethane was above the control limit in the LCSD for batch 29942. The associated field samples were non-detect for this compound; therefore, qualification of the data is not warranted. The RPDs between the LCS/LCSD pair were above the control limit for the compounds acetone and chloroethane. The associated field samples were qualified as estimated for these compounds.

SDG (LC17068) The RPD between the LCS/LCDS pair was above the control limit for the compound trichlorofluoromethane. The associated field samples were qualified as estimated for this compound.

SDG (LC17068) The recoveries of the compounds acetone, methyl acetate and 4-methyl-2-pentanone were above the control limit in the LCSD for batch 30086. All detections of these compounds in the associated field samples were qualified as estimated. The RPDs between the LCS/LCSD pair were above the control limit for acetone, 2-butanone, 2-hexanone, methyl acetate and 4-methyl-2-pentanone. The associated field samples were qualified as estimated for these compounds.

SDG (LC17068) The recovery of the compounds acetone, carbon disulfide, methyl acetate and methyl tertiary butyl ether were above the control limit in the LCS and/or the LCSD for batch 30124. All detections of these compounds in the associated field samples were qualified as estimated. The RPDs between the LCS/LCSD pair were above the control limit for acetone and chloroethane. The associated field samples were qualified as estimated for these compounds.

SDG (LC20005) The RPDs between the LCS/LCSD pair were above the control limit trichlorofluoromethane. The associated field samples were qualified as estimated for this compound.

SDG (LD01022) The recovery of the compound 1,2,4-trichlorobenzene was above the control limit in the LCSD for batch 30893. The associated field samples were non-detect for this compound; therefore, qualification of the data is not warranted.

SDG (LD01022) The recovery of the compound 1,2-dibromo-3-chloropropane was below the control limit in the LCSD for batch 30897. The associated field samples were qualified as estimated for this compound.

SDG (LD01022) The RPD between the LCS/LCSD pair was above the control limit for bromomethane. The associated field samples were qualified as estimated for this compound.

SDG (LD09018) The RPD between the LCS/LCSD pair was above the control limit for bromomethane. The associated field samples were qualified as estimated for this compound.

6. SDG (LD01022) Sample location F39TW01(20-25) was used as the MS/MSD. Several recoveries were outside the control limit in the MS and the MSD. Several RPDs were greater than the control limit. The parent sample was qualified as estimated for these compounds. See the attached qualification summary for details of the qualifications.

   SDG (LD14020) Sample location F39TW09(30-35) was used as the MS/MSD. Several recoveries were outside the control limit in the MS and the MSD. Several RPDs were greater than the control limit. The parent sample was qualified as estimated for these compounds. See the attached qualification summary for details of the qualifications.

7. SDG (LC13017) Sample location DUP-5(031110) was collected as a field duplicate of G4MW027(031110). The RPDs were acceptable at less than 40%.

SDG (LC17068) Sample location DUP-2(031810) was collected as a field duplicate of F39SB008(4-5). The RPDs were acceptable at less than 40%.

SDG (LD01022) Sample location DUP-3(033010) was collected as a field duplicate of F39TW02(20-25). The RPDs were acceptable at less than 40%.

SDG (LD09018) Sample location DUP-4(040710) was collected as a field duplicate of F39TW06(30-35). The RPDs were acceptable at less than 40%.

SDG (LD09018) Sample location DUP01(040810) was collected as a field duplicate of F39SW-01(040810). The RPD for trichloroethene was above the 40% control limit. The parent and the duplicate were qualified as estimated for this compound.

HUNTER STEWART
ELECTRONIC VALIDATION REVIEW REPORT
SDGs: LC13017, LC17068, LC20005, LD01022, LD09009, LD09018 and LD14020
FST-39

SEMIVOLATILE ORGANIC COMPOUNDS

Items Reviewed	DQM Deficiency		Qualification Applied	
	No	Yes	No	Yes
1. Holding times/Preservation		DQM		DQM
2. Reporting limits	M		M	
3. Blanks				
A. Method blanks	DQM		DQM	
B. Equipment blanks	NA		NA	
4. Surrogate spike recoveries		DQM		DQM
5. Laboratory control sample (LCS) A. LCS %R		DQM		DQM
B. LCS duplicate (LCSD) %R	DQM		DQM	
C. LCS/LCSD RPD	DQM		DQM	
6. Matrix spike (MS)				
A. MS %R		DQM		DQM
B. MS duplicate (MSD) %R		DQM		DQM
C. MS/MSD precision (RPD)		DQM		DQM
7. Field Duplicate precision (RPD)	DQM		DQM	

M – Manual Review %R - percent recovery RPD - relative percent difference DQM – Data Qualification Module

Comments:
This section presents a discussion of any additions or changes to the electronic data validation for compounds analyzed by Method 8270D.

1. SDG (LD14020) Sample location F39TW10(40-45) was extracted 6 days beyond the recommended seven day holding time. Sample locations F39TW11(40-45) and F39TW12(40-45) were analyzed five days beyond the recommened seven day holding time. All SVOC results for these samples were qualified as estimated.

2. SDG (LC17068) Several samples were analyzed at 2x dilutions due to the viscosity of the sample. There were elevated reporting limits for non-detect results.

4. SDG (LD01022) One surrogate recovery was below the control limit in F39TW02(40-45). Only one surrogate recovery was outside the control limit. No qualification is necessary.

   SDG (LD01022) One base-neutral surrogate recovery was less than 10% in F39TW03(40-45). The sample was re-analyzed outside the 7 day holding time with similar results. The initial analysis will be used for reporting purposes for the acid compounds. The re-analysis will be used for the base-neutral compounds. All base-neutral compounds for this sample were qualified as rejected.

   SDG (LD09018) Two base-neutral surrogate recoveries were less than ten percent in the initial analysis of F39TW06(40-45). The sample was re-extracted 5 days beyond the 7 day recommended holding time. The surrogate recoveries were acceptable in the re-analysis. The initial analysis will be used for reporting the acid compounds. The re-analysis will be used for reporting purposes for the base neutral compounds. All base neutral compounds were qualified as estimated.

   SDG (LD09018) Two base neutral surrogate exhibited recoveries less than ten percent in the initial analysis of F39TW08(30-35). The sample was re-extracted 3 days beyond the 7 day recommended

holding time. The surrogate recoveries were acceptable in the re-analysis. The acid compounds will be reported with no qualification from the original analyses since the acid surrogates exhibited acceptable recoveries. The base-neutral compounds will be reported from the re-analysis and all base-neutral compounds were qualified as estimated.

SDG (LD09018) One base-neutral surrogate exhibited a recovery less than ten percent in the initial and re-analysis for sample F39TW08(40-45). The re-analysis will be used for reporting purposes and all base-neutral compounds will be qualified as rejected.

SDG (LD14020) One base-neutral surrogate recovery was less than ten percent in sample locations F39TW09(30-35) and F39TW12(40-45). All base neutral compounds for this sample were qualified as rejected.

SDG (LD14020) One surrogate recovery was below the control limit in F39TW10(40-45). Only one surrogate was outside the control limit; therefore, no qualification is necessary.

5. SDG (LC20005) The recovery of the compound 4-chloroaniline was below the control limit in the LCS. The RPD between the LCS/LCSD pair was greater than the control limit for 4-chloroaniline. The associated field samples were qualified as estimated for this compound.

   SDG (LD01022) The recovery of carbazole was above the control limit in the LCS for batch 30843. The associated field samples were non-detect for this compound; therefore, qualification of the data was not warranted.

   SDG (LD09018) The recoveries of several compounds were less than the control limit in the LCS for batch 30326. The associated field samples were qualified as estimated for these compounds. Please see the attached qualification summary for details of the qualifications.

6. SDG (LC17068) Sample location F39SB001(4.5-5.5) was used as the MS/MSD. The RPDs between the MS/MSD pair were greater than the control limit for bis(2-chloroethyl)ether, bis(2-chloroisopropyl)ether, 2-chlorophenol, 2-methylphenol and nitrobenzene. The parent sample was qualified as estimated for these compounds.

   SDG (LD01022) Sample location F39TW01(20-25) was used as the MS/MSD. Several recoveries were outside the control limit in the MS and the MSD. The parent sample was qualified as estimated for these compounds when applicable. The recovery of benzo(g,h,i)perylene was less than ten percent in the MS. The parent sample was qualified as rejected for this compound. See the attached qualification summary for details of the qualifications.

   SDG (LD09009) Sample location G4MW034(040610) was used as the MS/MSD. Several recoveries were outside the control limit in the MS and the MSD. The parent sample was qualified as estimated for these compounds when applicable. The recoveries of 4-chloroaniline, 3-nitroaniline and 4-nitroaniline were less than ten percent in the MSD. The parent sample was qualified as rejected for these compounds. The RPDs between the MS/MSD pair were greater than the control limit for several compounds. The parent sample was qualified as estimated for these compounds. See the attached qualification summary for details of the qualifications.

   SDG (LD09018) Sample location F39SW-01(040810) was used as the MS/MSD. Several recoveries were outside the control limit in the MS and the MSD. The parent sample was qualified as estimated for these compounds when applicable. The recoveries of 4-chloroaniline and 3-nitroaniline were less than ten percent in the MS. The parent sample was qualified as rejected for these compounds. The RPDs

between the MS/MSD pair were greater than the control limit for several compounds. The parent sample was qualified as estimated for these compounds. See the attached qualification summary for details of the qualifications.

SDG (LD09018) Sample location F39SED01(040810) was used as the MS/MSD. Several recoveries and RPDs were outside the control limit. The parent sample was qualified as estimated for these compounds. See the attached qualification summary for details of the qualifications.

SDG (LD14020) Sample location F39TW09(30-35) was used as the MS/MSD. Several recoveries were outside the control limit in the MS and the MSD. Several RPDs were greater than the control limit. The parent sample was qualified as estimated for these compounds. See the attached qualification summary for details of the qualifications.

SDG (LD14020) Sample location F39TW11(20-25) was used as the MS/MSD. Several recoveries were outside the control limit in the MS and the MSD. Several RPDs were greater than the control limit. The parent sample was qualified as estimated for these compounds. See the attached qualification summary for details of the qualifications. The recoveries of 4-chloroaniline, bis(2-ethylhexyl)phthalate, 3-nitroaniline, 4-nitroaniline and diphenylamine were less than ten percent in the MS and/or the MSD. The parent sample was qualified as rejected for these compounds.

7. SDG (LC17068) Sample location DUP-2(031810) was collected as a field duplicate of F39SB008(4-5). The RPDs were acceptable at non-detect.

SDG (LD01022) Sample location DUP-3(033010) was collected as a field duplicate of F39TW02(20-25). The RPDs were acceptable at less than 40%.

SDG (LD09018) Sample location DUP-4(040710) was collected as a field duplicate of F39TW06(30-35). The RPDs were acceptable at non-detect.

SDG (LD09018) Sample location DUP01(040810) was collected as a field duplicate of F39SW-01(040810). The RPDs were acceptable at less than 40%.

METALS

Items Reviewed	DQM Deficiency		Qualification Applied	
	No	Yes	No	Yes
1. Holding times/Preservation	DQM		DQM	
2. Reporting limits	M		M	
3. Blanks				
A. Method blanks		DQM		DQM
B. Equipment blanks	NA		NA	
4. Laboratory control sample (LCS) A. LCS %R	DQM		DQM	
B. LCS duplicate (LCSD) %R	DQM		DQM	
C. LCS/LCSD RPD	DQM		DQM	
5. Matrix spike (MS)				
A. MS %R	DQM		DQM	
B. MS duplicate (MSD) %R	DQM		DQM	
C. MS/MSD precision (RPD)	DQM		DQM	
6. Field Duplicate precision (RPD)	DQM		DQM	

M – Manual Review %R - percent recovery RPD - relative percent difference DQM – Data Qualification Module

Comments:
This section presents a discussion of any additions or changes to the electronic data validation for compounds analyzed by Methods 6010C and 7471B.

3A. SDG (LC17068) The metals cadmium, chromium and selenium were detected in the method blank. The associated field samples were qualified as non-detect for these metals if the sample concentration was less than five times the blank value.

SDG (LD09009) The metals arsenic and silver were detected in the method blank. The associated field samples were qualified as non-detect for these metals if the sample concentration was less than five times the blank value.

SDG (LD09018) The metals cadmium, chromium and selenium were detected in the method blank for batch 31320. The associated field samples were qualified as non-detect for these metals if the sample concentration was less than five times the blank value.

SDG (LD09018) The metals arsenic and silver were detected in the method blank for batch 31332.

5. SDG (LC17068) Sample location F39SB009(0.5-1.0) was used as the MS/MSD. The recoveries and RPDs were acceptable.

SDG (LC17068) Sample location F39SB009(3.0-3.5) was used as the MS. The recoveries were acceptable.

SDG (LD09018) Sample location F39SED01(040810) was used as the MS/MSD. The recoveries and RPDs were acceptable.

SDG (LD09018) Sample location F39SED02(040810) was used as the MS. The recoveries were acceptable.

SDG (LD09018) Sample location F39SW-02(0408/10) was used as the MS/MSD for mercury. The recoveries and RPD were acceptable.

6. SDG (LC17068) Sample location DUP-2(031810) was collected as a field duplicate of F39SB008(4-5). The RPDs were acceptable at less than 40%.

   SDG (LD09018) Sample location DUP01(040810) was collected as a field duplicate of F39SW-01(040810). The RPDs were acceptable at less than 40%.

SDG	Sample ID	Method	Analyte	Result	Units	Qualifier	Reason	Dilution
LC13017	DUP-5 (031110)	SW8260	Acetone	1.5	ug/l	UB	Blank Contamination	1
LC13017	G4MW006 (031210)	SW8260	Acetone	1.2	ug/l	UB	Blank Contamination	1
LC13017	G4MW010 (031210)	SW8260	Acetone	2.5	ug/l	UB	Blank Contamination	1
LC13017	G4MW011 (031110)	SW8260	Acetone	1.3	ug/l	UB	Blank Contamination	1
LC13017	G4MW016 (031010)	SW8260	Acetone	1.3	ug/l	UB	Blank Contamination	1
LC13017	G4MW017 (031010)	SW8260	Acetone	1.9	ug/l	UB	Blank Contamination	1
LC13017	G4MW018 (031210)	SW8260	Acetone	1.4	ug/l	UB	Blank Contamination	1
LC13017	G4MW019 (031010)	SW8260	Acetone	1.8	ug/l	UB	Blank Contamination	1
LC13017	G4MW020 (031010)	SW8260	Acetone	1.2	ug/l	UB	Blank Contamination	1
LC13017	G4MW023 (031010)	SW8260	Acetone	1.5	ug/l	UB	Blank Contamination	1
LC13017	G4MW024 (031010)	SW8260	Acetone	3	ug/l	UB	Blank Contamination	1
LC13017	G4MW025 (031010)	SW8260	Acetone	1.8	ug/l	UB	Blank Contamination	1
LC13017	G4MW027 (031110)	SW8260	Acetone	1.8	ug/l	UB	Blank Contamination	1
LC13017	G4MW028 (031110)	SW8260	Acetone	1.8	ug/l	UB	Blank Contamination	1
LC13017	G4MW029 (031110)	SW8260	Acetone	1.1	ug/l	UB	Blank Contamination	1

SDG	Sample ID	Method	Analyte	Result	Units	Qualifier	Reason	Dilution
LC13017	G4MW031 (031010)	SW8260	Acetone	1.3	ug/l	UB	Blank Contamination	1
LC17068	DUP-2 (031810)	SW6010	Selenium	0.53	mg/kg	UB	Blank Contamination	1
LC17068	DUP-2 (031810)	SW6010	Cadmium	0.052	mg/kg	UB	Blank Contamination	1
LC17068	DUP-2 (031810)	SW8260	2-Butanone (MEK)	<9.4	ug/kg	UJ	LCS/LCSD RPD	1
LC17068	DUP-2 (031810)	SW8260	4-Methyl-2-pentanone	<9.4	ug/kg	UJ	LCS/LCSD RPD	1
LC17068	DUP-2 (031810)	SW8260	Acetone	19	ug/kg	UJ	Blank Contamination, LCSD Recovery and LCS/LCSD RPD	1
LC17068	DUP-2 (031810)	SW8260	Methyl acetate	<4.7	ug/kg	UJ	LCS/LCSD RPD	1
LC17068	DUP-2 (031810)	SW8260	2-Hexanone	<9.4	ug/kg	UJ	LCS/LCSD RPD	1
LC17068	F39SB001 (4.5-5.5)	SW6010	Selenium	0.67	mg/kg	UB	Blank Contamination	1
LC17068	F39SB001 (4.5-5.5)	SW6010	Cadmium	0.049	mg/kg	UB	Blank Contamination	1
LC17068	F39SB001 (4.5-5.5)	SW8260	Chloroethane	<4.5	ug/kg	UJ	LCS/LCSD RPD	1
LC17068	F39SB001 (4.5-5.5)	SW8260	Acetone	<18.0	ug/kg	UJ	LCS/LSD RPD	1
LC17068	F39SB001 (4.5-5.5)	SW8270	Nitrobenzene	<78.0	ug/kg	UJ	LCS/LCSD RPD	1
LC17068	F39SB001 (4.5-5.5)	SW8270	2-Chlorophenol	<78.0	ug/kg	UJ	LCS/LCSD RPD	1
LC17068	F39SB001 (4.5-5.5)	SW8270	2-Methylphenol	<78.0	ug/kg	UJ	LCS/LCSD RPD	1

SDG	Sample ID	Method	Analyte	Result	Units	Qualifier	Reason	Dilution
LC17068	F39SB001 (4.5-5.5)	SW8270	bis(2-Chloroethoxy) ether	<78.0	ug/kg	UJ	LCS/LCSD RPD	1
LC17068	F39SB001 (4.5-5.5)	SW8270	bis(2-chloroisopropyl) ether	<78.0	ug/kg	UJ	LCS/LCSD RPD	1
LC17068	F39SB002 (4-5)	SW6010	Cadmium	0.057	mg/kg	UB	Blank Contamination	1
LC17068	F39SB002 (4-5)	SW6010	Selenium	0.39	mg/kg	UB	Blank Contamination	1
LC17068	F39SB002 (4-5)	SW8260	Methyl acetate	<4.4	ug/kg	UJ	LCS/LCSD RPD	1
LC17068	F39SB002 (4-5)	SW8260	4-Methyl-2-pentanone	<8.8	ug/kg	UJ	LCS/LCSD RPD	1
LC17068	F39SB002 (4-5)	SW8260	2-Butanone (MEK)	<8.8	ug/kg	UJ	LCS/LCSD RPD	1
LC17068	F39SB002 (4-5)	SW8260	2-Hexanone	<8.8	ug/kg	UJ	LCS/LCSD RPD	1
LC17068	F39SB002 (4-5)	SW8260	Acetone	15	ug/kg	UJ	Blank Contamination, LCSD Recovery and LCS/LCSD RPD	1
LC17068	F39SB003 (4-5)	SW6010	Selenium	0.79	mg/kg	UB	Blank Contamination	1
LC17068	F39SB003 (4-5)	SW6010	Cadmium	0.027	mg/kg	UB	Blank Contamination	1
LC17068	F39SB003 (4-5)	SW8260	Chloroethane	<4.5	ug/kg	UJ	LCS/LCSD RPD	1
LC17068	F39SB003 (4-5)	SW8260	Acetone	63	ug/kg	J	LCS/LSD RPD	1
LC17068	F39SB004 (4-5)	SW6010	Selenium	0.44	mg/kg	UB	Blank Contamination	1
LC17068	F39SB004 (4-5)	SW6010	Cadmium	0.029	mg/kg	UB	Blank Contamination	1

SDG	Sample ID	Method	Analyte	Result	Units	Qualifier	Reason	Dilution
LC17068	F39SB004 (4-5)	SW8260	CFC-12	<4.7	ug/kg	UJ	LCS/LCSD RPD	1
LC17068	F39SB004 (4-5)	SW8260	CFC-11	<4.7	ug/kg	UJ	LCS/LCSD RPD	1
LC17068	F39SB004 (4-5)	SW8260	1,1,2-Trichloro-1,2,2-Trifluoroethane	<4.7	ug/kg	UJ	LCS/LCSD RPD	1
LC17068	F39SB004 (4-5)	SW8260	Methylcyclohexane	<4.7	ug/kg	UJ	LCS/LCSD RPD	1
LC17068	F39SB004 (4-5)	SW8260	Cyclohexane	<4.7	ug/kg	UJ	LCS/LCSD RPD	1
LC17068	F39SB004 (4-5)	SW8260	Bromomethane	<4.7	ug/kg	UJ	LCS/LCSD RPD	1
LC17068	F39SB004 (4-5)	SW8260	Chloromethane	<4.7	ug/kg	UJ	LCS/LCSD RPD	1
LC17068	F39SB004 (4-5)	SW8260	Chloroethane	<4.7	ug/kg	UJ	LCS/LCSD RPD	1
LC17068	F39SB004 (4-5)	SW8260	Vinyl Chloride	<4.7	ug/kg	UJ	LCS/LCSD RPD	1
LC17068	F39SB004 (4-5)	SW8260	1,1-Dichloroethylene	<4.7	ug/kg	UJ	LCS/LCSD RPD	1
LC17068	F39SB004 (4-5)	SW8260	Methyl acetate	<4.7	ug/kg	UJ	LCS/LCSD RPD	1
LC17068	F39SB005 (4-5)	SW6010	Cadmium	0.022	mg/kg	UB	Blank Contamination	1
LC17068	F39SB005 (4-5)	SW6010	Selenium	0.22	mg/kg	UB	Blank Contamination	1
LC17068	F39SB005 (4-5)	SW8260	Acetone	24	ug/kg	J	LCS/LSD RPD	1
LC17068	F39SB005 (4-5)	SW8260	Chloroethane	<4.7	ug/kg	UJ	LCS/LCSD RPD	1

SDG	Sample ID	Method	Analyte	Result	Units	Qualifier	Reason	Dilution
LC17068	F39SB006 (4-5)	SW6010	Selenium	0.55	mg/kg	UB	Blank Contamination	1
LC17068	F39SB006 (4-5)	SW6010	Cadmium	0.061	mg/kg	UB	Blank Contamination	1
LC17068	F39SB006 (4-5)	SW8260	Chloroethane	<4.4	ug/kg	UJ	LCS/LCSD RPD	1
LC17068	F39SB006 (4-5)	SW8260	Acetone	63	ug/kg	J	LCSD Recovery	1
LC17068	F39SB007 (4-5)	SW6010	Selenium	0.49	mg/kg	UB	Blank Contamination	1
LC17068	F39SB007 (4-5)	SW6010	Cadmium	0.1	mg/kg	UB	Blank Contamination	1
LC17068	F39SB007 (4-5)	SW8260	1,1,2-Trichloro-1,2,2-Trifluoroethane	<4.7	ug/kg	UJ	LCS/LCSD RPD	1
LC17068	F39SB007 (4-5)	SW8260	CFC-12	<4.7	ug/kg	UJ	LCS/LCSD RPD	1
LC17068	F39SB007 (4-5)	SW8260	Methyl acetate	<4.7	ug/kg	UJ	LCS/LCSD RPD	1
LC17068	F39SB007 (4-5)	SW8260	Methylcyclohexane	1	ug/kg	J	LCS/LCSD RPD	1
LC17068	F39SB007 (4-5)	SW8260	Vinyl Chloride	<4.7	ug/kg	UJ	LCS/LCSD RPD	1
LC17068	F39SB007 (4-5)	SW8260	Cyclohexane	<4.7	ug/kg	UJ	LCS/LCSD RPD	1
LC17068	F39SB007 (4-5)	SW8260	CFC-11	<4.7	ug/kg	UJ	LCS/LCSD RPD	1
LC17068	F39SB007 (4-5)	SW8260	Chloromethane	<4.7	ug/kg	UJ	LCS/LCSD RPD	1
LC17068	F39SB007 (4-5)	SW8260	Chloroethane	<4.7	ug/kg	UJ	LCS/LCSD RPD	1

SDG	Sample ID	Method	Analyte	Result	Units	Qualifier	Reason	Dilution
LC17068	F39SB007 (4-5)	SW8260	Bromomethane	<4.7	ug/kg	UJ	LCS/LCSD RPD	1
LC17068	F39SB007 (4-5)	SW8260	1,1-Dichloroethylene	<4.7	ug/kg	UJ	LCS/LCSD RPD	1
LC17068	F39SB008 (4-5)	SW6010	Selenium	0.47	mg/kg	UB	Blank Contamination	1
LC17068	F39SB008 (4-5)	SW6010	Cadmium	0.037	mg/kg	UB	Blank Contamination	1
LC17068	F39SB008 (4-5)	SW8260	2-Hexanone	<9.4	ug/kg	UJ	LCS/LCSD RPD	1
LC17068	F39SB008 (4-5)	SW8260	Acetone	31	ug/kg	UJ	Blank Contamination, LCSD Recovery and LCS/LCSD RPD	1
LC17068	F39SB008 (4-5)	SW8260	2-Butanone (MEK)	<9.4	ug/kg	UJ	LCS/LCSD RPD	1
LC17068	F39SB008 (4-5)	SW8260	Methyl acetate	<4.7	ug/kg	UJ	LCS/LCSD RPD	1
LC17068	F39SB008 (4-5)	SW8260	4-Methyl-2-pentanone	<9.4	ug/kg	UJ	LCS/LCSD RPD	1
LC17068	F39SB009 (0.5-1)	SW6010	Selenium	0.61	mg/kg	UB	Blank Contamination	1
LC17068	F39SB009 (0.5-1)	SW8260	1,1-Dichloroethylene	<5.3	ug/kg	UJ	LCS/LCSD RPD	1
LC17068	F39SB009 (0.5-1)	SW8260	Methylcyclohexane	<5.3	ug/kg	UJ	LCS/LCSD RPD	1
LC17068	F39SB009 (0.5-1)	SW8260	Cyclohexane	<5.3	ug/kg	UJ	LCS/LCSD RPD	1
LC17068	F39SB009 (0.5-1)	SW8260	Bromomethane	<5.3	ug/kg	UJ	LCS/LCSD RPD	1
LC17068	F39SB009 (0.5-1)	SW8260	Chloromethane	<5.3	ug/kg	UJ	LCS/LCSD RPD	1

SDG	Sample ID	Method	Analyte	Result	Units	Qualifier	Reason	Dilution
LC17068	F39SB009 (0.5-1)	SW8260	Chloroethane	<5.3	ug/kg	UJ	LCS/LCSD RPD	1
LC17068	F39SB009 (0.5-1)	SW8260	Vinyl Chloride	<5.3	ug/kg	UJ	LCS/LCSD RPD	1
LC17068	F39SB009 (0.5-1)	SW8260	CFC-12	<5.3	ug/kg	UJ	LCS/LCSD RPD	1
LC17068	F39SB009 (0.5-1)	SW8260	CFC-11	<5.3	ug/kg	UJ	LCS/LCSD RPD	1
LC17068	F39SB009 (0.5-1)	SW8260	1,1,2-Trichloro-1,2,2-Trifluoroethane	<5.3	ug/kg	UJ	LCS/LCSD RPD	1
LC17068	F39SB009 (0.5-1)	SW8260	Methyl acetate	<5.3	ug/kg	UJ	LCS/LCSD RPD	1
LC17068	F39SB009 (3.0-3.5)	SW6010	Cadmium	0.045	mg/kg	UB	Blank Contamination	1
LC17068	F39SB009 (3.0-3.5)	SW6010	Selenium	0.51	mg/kg	UB	Blank Contamination	1
LC17068	F39SB009 (3.0-3.5)	SW8260	Chloroethane	<5.0	ug/kg	UJ	LCS/LCSD RPD	1
LC17068	F39SB009 (3.0-3.5)	SW8260	Acetone	<20.0	ug/kg	UJ	LCS/LSD RPD	1
LC17068	F39SB010 (0.5-1.0)	SW6010	Cadmium	0.054	mg/kg	UB	Blank Contamination	1
LC17068	F39SB010 (0.5-1.0)	SW6010	Selenium	0.38	mg/kg	UB	Blank Contamination	1
LC17068	F39SB010 (0.5-1.0)	SW8260	Vinyl Chloride	<4.9	ug/kg	UJ	LCS/LCSD RPD	1
LC17068	F39SB010 (0.5-1.0)	SW8260	Methyl acetate	<4.9	ug/kg	UJ	LCS/LCSD RPD	1
LC17068	F39SB010 (0.5-1.0)	SW8260	1,1,2-Trichloro-1,2,2-Trifluoroethane	<4.9	ug/kg	UJ	LCS/LCSD RPD	1

SDG	Sample ID	Method	Analyte	Result	Units	Qualifier	Reason	Dilution
LC17068	F39SB010 (0.5-1.0)	SW8260	CFC-12	<4.9	ug/kg	UJ	LCS/LCSD RPD	1
LC17068	F39SB010 (0.5-1.0)	SW8260	1,1-Dichloroethylene	<4.9	ug/kg	UJ	LCS/LCSD RPD	1
LC17068	F39SB010 (0.5-1.0)	SW8260	Chloroethane	<4.9	ug/kg	UJ	LCS/LCSD RPD	1
LC17068	F39SB010 (0.5-1.0)	SW8260	Chloromethane	<4.9	ug/kg	UJ	LCS/LCSD RPD	1
LC17068	F39SB010 (0.5-1.0)	SW8260	Bromomethane	<4.9	ug/kg	UJ	LCS/LCSD RPD	1
LC17068	F39SB010 (0.5-1.0)	SW8260	Cyclohexane	<4.9	ug/kg	UJ	LCS/LCSD RPD	1
LC17068	F39SB010 (0.5-1.0)	SW8260	Methylcyclohexane	<4.9	ug/kg	UJ	LCS/LCSD RPD	1
LC17068	F39SB010 (0.5-1.0)	SW8260	CFC-11	<4.9	ug/kg	UJ	LCS/LCSD RPD	1
LC17068	F39SB010 (3.0-3.5)	SW6010	Cadmium	0.041	mg/kg	UB	Blank Contamination	1
LC17068	F39SB010 (3.0-3.5)	SW6010	Selenium	0.3	mg/kg	UB	Blank Contamination	1
LC17068	F39SB010 (3.0-3.5)	SW8260	Bromomethane	<4.7	ug/kg	UJ	LCS/LCSD RPD	1
LC17068	F39SB010 (3.0-3.5)	SW8260	Chloromethane	<4.7	ug/kg	UJ	LCS/LCSD RPD	1
LC17068	F39SB010 (3.0-3.5)	SW8260	Chloroethane	<4.7	ug/kg	UJ	LCS/LCSD RPD	1
LC17068	F39SB010 (3.0-3.5)	SW8260	Vinyl Chloride	<4.7	ug/kg	UJ	LCS/LCSD RPD	1
LC17068	F39SB010 (3.0-3.5)	SW8260	Cyclohexane	<4.7	ug/kg	UJ	LCS/LCSD RPD	1

SDG	Sample ID	Method	Analyte	Result	Units	Qualifier	Reason	Dilution
LC17068	F39SB010 (3.0-3.5)	SW8260	Methyl acetate	<4.7	ug/kg	UJ	LCS/LCSD RPD	1
LC17068	F39SB010 (3.0-3.5)	SW8260	1,1-Dichloroethylene	<4.7	ug/kg	UJ	LCS/LCSD RPD	1
LC17068	F39SB010 (3.0-3.5)	SW8260	1,1,2-Trichloro-1,2,2-Trifluoroethane	<4.7	ug/kg	UJ	LCS/LCSD RPD	1
LC17068	F39SB010 (3.0-3.5)	SW8260	CFC-12	<4.7	ug/kg	UJ	LCS/LCSD RPD	1
LC17068	F39SB010 (3.0-3.5)	SW8260	CFC-11	<4.7	ug/kg	UJ	LCS/LCSD RPD	1
LC17068	F39SB010 (3.0-3.5)	SW8260	Methylcyclohexane	<4.7	ug/kg	UJ	LCS/LCSD RPD	1
LC17068	F39SB011 (0.5-1.0)	SW6010	Cadmium	0.038	mg/kg	UB	Blank Contamination	1
LC17068	F39SB011 (0.5-1.0)	SW6010	Selenium	0.52	mg/kg	UB	Blank Contamination	1
LC17068	F39SB011 (0.5-1.0)	SW8260	1,1-Dichloroethylene	<4.4	ug/kg	UJ	LCS/LCSD RPD	1
LC17068	F39SB011 (0.5-1.0)	SW8260	Chloroethane	<4.4	ug/kg	UJ	LCS/LCSD RPD	1
LC17068	F39SB011 (0.5-1.0)	SW8260	CFC-12	<4.4	ug/kg	UJ	LCS/LCSD RPD	1
LC17068	F39SB011 (0.5-1.0)	SW8260	Chloromethane	<4.4	ug/kg	UJ	LCS/LCSD RPD	1
LC17068	F39SB011 (0.5-1.0)	SW8260	Vinyl Chloride	<4.4	ug/kg	UJ	LCS/LCSD RPD	1
LC17068	F39SB011 (0.5-1.0)	SW8260	Cyclohexane	<4.4	ug/kg	UJ	LCS/LCSD RPD	1
LC17068	F39SB011 (0.5-1.0)	SW8260	CFC-11	<4.4	ug/kg	UJ	LCS/LCSD RPD	1

SDG	Sample ID	Method	Analyte	Result	Units	Qualifier	Reason	Dilution
LC17068	F39SB011 (0.5-1.0)	SW8260	Methylcyclohexane	<4.4	ug/kg	UJ	LCS/LCSD RPD	1
LC17068	F39SB011 (0.5-1.0)	SW8260	1,1,2-Trichloro-1,2,2-Trifluoroethane	<4.4	ug/kg	UJ	LCS/LCSD RPD	1
LC17068	F39SB011 (0.5-1.0)	SW8260	Methyl acetate	<4.4	ug/kg	UJ	LCS/LCSD RPD	1
LC17068	F39SB011 (0.5-1.0)	SW8260	Bromomethane	<4.4	ug/kg	UJ	LCS/LCSD RPD	1
LC17068	F39SB011 (3.0-3.5)	SW6010	Selenium	0.38	mg/kg	UB	Blank Contamination	1
LC17068	F39SB011 (3.0-3.5)	SW6010	Cadmium	0.03	mg/kg	UB	Blank Contamination	1
LC17068	F39SB011 (3.0-3.5)	SW8260	Acetone	63	ug/kg	J	LCS/LSD RPD	1
LC17068	F39SB011 (3.0-3.5)	SW8260	Chloroethane	<4.9	ug/kg	UJ	LCS/LCSD RPD	1
LC17068	F39SB012 (0.5-1.0)	SW6010	Chromium	0.38	mg/kg	UB	Blank Contamination	1
LC17068	F39SB012 (0.5-1.0)	SW6010	Cadmium	0.014	mg/kg	UB	Blank Contamination	1
LC17068	F39SB012 (0.5-1.0)	SW8260	Cyclohexane	<4.5	ug/kg	UJ	LCS/LCSD RPD	1
LC17068	F39SB012 (0.5-1.0)	SW8260	Methylcyclohexane	<4.5	ug/kg	UJ	LCS/LCSD RPD	1
LC17068	F39SB012 (0.5-1.0)	SW8260	Chloromethane	<4.5	ug/kg	UJ	LCS/LCSD RPD	1
LC17068	F39SB012 (0.5-1.0)	SW8260	Bromomethane	<4.5	ug/kg	UJ	LCS/LCSD RPD	1
LC17068	F39SB012 (0.5-1.0)	SW8260	1,1-Dichloroethylene	<4.5	ug/kg	UJ	LCS/LCSD RPD	1

SDG	Sample ID	Method	Analyte	Result	Units	Qualifier	Reason	Dilution
LC17068	F39SB012 (0.5-1.0)	SW8260	Vinyl Chloride	<4.5	ug/kg	UJ	LCS/LCSD RPD	1
LC17068	F39SB012 (0.5-1.0)	SW8260	Methyl acetate	<4.5	ug/kg	UJ	LCS/LCSD RPD	1
LC17068	F39SB012 (0.5-1.0)	SW8260	1,1,2-Trichloro-1,2,2-Trifluoroethane	<4.5	ug/kg	UJ	LCS/LCSD RPD	1
LC17068	F39SB012 (0.5-1.0)	SW8260	CFC-12	<4.5	ug/kg	UJ	LCS/LCSD RPD	1
LC17068	F39SB012 (0.5-1.0)	SW8260	CFC-11	<4.5	ug/kg	UJ	LCS/LCSD RPD	1
LC17068	F39SB012 (0.5-1.0)	SW8260	Chloroethane	<4.5	ug/kg	UJ	LCS/LCSD RPD	1
LC17068	F39SB012 (3.0-3.5)	SW6010	Selenium	0.65	mg/kg	UB	Blank Contamination	1
LC17068	F39SB012 (3.0-3.5)	SW6010	Cadmium	0.038	mg/kg	UB	Blank Contamination	1
LC17068	F39SB012 (3.0-3.5)	SW8260	Vinyl Chloride	<4.2	ug/kg	UJ	LCS/LCSD RPD	1
LC17068	F39SB012 (3.0-3.5)	SW8260	Methyl acetate	<4.2	ug/kg	UJ	LCS/LCSD RPD	1
LC17068	F39SB012 (3.0-3.5)	SW8260	1,1,2-Trichloro-1,2,2-Trifluoroethane	<4.2	ug/kg	UJ	LCS/LCSD RPD	1
LC17068	F39SB012 (3.0-3.5)	SW8260	CFC-12	<4.2	ug/kg	UJ	LCS/LCSD RPD	1
LC17068	F39SB012 (3.0-3.5)	SW8260	1,1-Dichloroethylene	<4.2	ug/kg	UJ	LCS/LCSD RPD	1
LC17068	F39SB012 (3.0-3.5)	SW8260	Chloroethane	<4.2	ug/kg	UJ	LCS/LCSD RPD	1
LC17068	F39SB012 (3.0-3.5)	SW8260	Chloromethane	<4.2	ug/kg	UJ	LCS/LCSD RPD	1

SDG	Sample ID	Method	Analyte	Result	Units	Qualifier	Reason	Dilution
LC17068	F39SB012 (3.0-3.5)	SW8260	Bromomethane	<4.2	ug/kg	UJ	LCS/LCSD RPD	1
LC17068	F39SB012 (3.0-3.5)	SW8260	Cyclohexane	<4.2	ug/kg	UJ	LCS/LCSD RPD	1
LC17068	F39SB012 (3.0-3.5)	SW8260	Methylcyclohexane	<4.2	ug/kg	UJ	LCS/LCSD RPD	1
LC17068	F39SB012 (3.0-3.5)	SW8260	CFC-11	<4.2	ug/kg	UJ	LCS/LCSD RPD	1
LC17068	TRIP BLANK (031610)	SW8260	Tribromomethane	<0.50	ug/l	UJ	LCS Recovery	1
LC20005	F39TW01 (40-45)	SW8260	Acetone	6.9	ug/l	UB	Blank Contamination	1
LC20005	F39TW01 (40-45)	SW8260	CFC-11	<0.50	ug/l	UJ	LCS/LCSD RPD	1
LC20005	F39TW01 (40-45)	SW8260	Carbon disulfide	0.27	ug/l	UB	Blank Contamination	1
LC20005	F39TW01 (40-45)	SW8270	p-Chloroaniline	<1.0	ug/l	UJ	LCS Recovery and LCS/LCSD RPD	1
LC20005	Trip Blank (031810)	SW8260	CFC-11	<0.50	ug/l	UJ	LCS/LCSD RPD	1
LC20005	Trip Blank (031810)	SW8260	CFC-11	<0.50	ug/l	UJ	LCS/LCSD RPD	1
LD01022	DUP-3 (033010)	SW8260	Methylene Chloride	0.21	ug/l	UB	Blank Contamination	1
LD01022	DUP-3 (033010)	SW8260	Bromomethane	<0.50	ug/l	UJ	LCS/LCSD RPD	1
LD01022	F39TW01 (10-15)	SW8260	Acetone	4.6	ug/l	UB	Blank Contamination	1
LD01022	F39TW01 (10-15)	SW8260	Bromomethane	<0.50	ug/l	UJ	LCS/LCSD RPD	1

SDG	Sample ID	Method	Analyte	Result	Units	Qualifier	Reason	Dilution
LD01022	F39TW01 (10-15)	SW8260	Methylene Chloride	0.18	ug/l	UB	Blank Contamination	1
LD01022	F39TW01 (20-25)	SW8260	1,1,1-Trichloroethane	<0.50	ug/l	UJ	MS Recovery and MS/MSD RPD	1
LD01022	F39TW01 (20-25)	SW8260	1,1-Dichloroethylene	0.1	ug/l	J	MS/MSD Recovery and MS/MSD RPD	1
LD01022	F39TW01 (20-25)	SW8260	1,1-Dichloroethane	<0.50	ug/l	UJ	MS/MSD Recovery and MS/MSD RPD	1
LD01022	F39TW01 (20-25)	SW8260	Bromodichloromethane	<0.50	ug/l	UJ	MS Recovery and MS/MSD RPD	1
LD01022	F39TW01 (20-25)	SW8260	Tribromomethane	<0.50	ug/l	UJ	MS/MSD Recovery and MS/MSD RPD	1
LD01022	F39TW01 (20-25)	SW8260	Carbon disulfide	0.23	ug/l	J	MS Recovery and MS/MSD RPD	1
LD01022	F39TW01 (20-25)	SW8260	Methylene Chloride	<0.50	ug/l	UJ	MS/MSD Recovery and MS/MSD RPD	1
LD01022	F39TW01 (20-25)	SW8260	CFC-11	<0.50	ug/l	UJ	MS Recovery and MS/MSD RPD	1
LD01022	F39TW01 (20-25)	SW8260	Bromomethane	<0.50	ug/l	UJ	MS Recovery	1
LD01022	F39TW01 (20-25)	SW8260	1,1,2-Trichloroethane	<0.50	ug/l	UJ	MS Recovery and MS/MSD RPD	1
LD01022	F39TW01 (20-25)	SW8260	Vinyl Chloride	<0.50	ug/l	UJ	MS/MSD RPD	1
LD01022	F39TW01 (20-25)	SW8260	CFC-12	<0.50	ug/l	UJ	MS/MSD RPD	1
LD01022	F39TW01 (20-25)	SW8260	1,1,2-Trichloro-1,2,2-Trifluoroethane	<0.50	ug/l	UJ	MS Recovery and MS/MSD RPD	1
LD01022	F39TW01 (20-25)	SW8260	Methylcyclohexane	<5.0	ug/l	UJ	MS Recovery and MS/MSD RPD	1

SDG	Sample ID	Method	Analyte	Result	Units	Qualifier	Reason	Dilution
LD01022	F39TW01 (20-25)	SW8260	1,2-Dichloropropane	<0.50	ug/l	UJ	MS Recovery and MS/MSD RPD	1
LD01022	F39TW01 (20-25)	SW8260	2-Butanone (MEK)	<10.0	ug/l	UJ	MS Recovery and MS/MSD RPD	1
LD01022	F39TW01 (20-25)	SW8260	Trichloroethylene	40	ug/l	J	MS Recovery	1
LD01022	F39TW01 (20-25)	SW8260	Methyl acetate	<1.0	ug/l	UJ	MS/MSD RPD	1
LD01022	F39TW01 (20-25)	SW8260	1,1,2,2-Tetrachloroethane	<0.50	ug/l	UJ	MS Recovery and MS/MSD RPD	1
LD01022	F39TW01 (20-25)	SW8260	1,2-Dichlorobenzene	<0.50	ug/l	UJ	MS Recovery and MS/MSD RPD	1
LD01022	F39TW01 (20-25)	SW8260	1,2-Dibromo-3-chloropropane (DBCP)	<0.50	ug/l	UJ	MS Recovery and MS/MSD RPD	1
LD01022	F39TW01 (20-25)	SW8260	Benzene, 1-methylethyl	<0.50	ug/l	UJ	MS Recovery and MS/MSD RPD	1
LD01022	F39TW01 (20-25)	SW8260	Benzene	0.53	ug/l	J	MS Recovery and MS/MSD RPD	1
LD01022	F39TW01 (20-25)	SW8260	Cyclohexane	<0.50	ug/l	UJ	MS Recovery and MS/MSD RPD	1
LD01022	F39TW01 (20-25)	SW8260	Chlorobenzene	<0.50	ug/l	UJ	MS Recovery and MS/MSD RPD	1
LD01022	F39TW01 (20-25)	SW8260	Chloroform	<0.50	ug/l	UJ	MS/MSD Recovery and MS/MSD RPD	1
LD01022	F39TW01 (20-25)	SW8260	Ethylbenzene	<0.50	ug/l	UJ	MS Recovery and MS/MSD RPD	1
LD01022	F39TW01 (20-25)	SW8260	Styrene	<0.50	ug/l	UJ	MS/MSD Recovery and MS/MSD RPD	1
LD01022	F39TW01 (20-25)	SW8260	cis-1,3-Dichloropropene	<0.50	ug/l	UJ	MS/MSD Recovery and MS/MSD RPD	1

SDG	Sample ID	Method	Analyte	Result	Units	Qualifier	Reason	Dilution
LD01022	F39TW01 (20-25)	SW8260	trans-1,3-Dichloropropene	<0.50	ug/l	UJ	MS/MSD Recovery and MS/MSD RPD	1
LD01022	F39TW01 (20-25)	SW8260	1,4-Dichlorobenzene	<0.50	ug/l	UJ	MS Recovery and MS/MSD RPD	1
LD01022	F39TW01 (20-25)	SW8260	1,2-Dibromoethane (EDB)	<0.50	ug/l	UJ	MS Recovery and MS/MSD RPD	1
LD01022	F39TW01 (20-25)	SW8260	1,2-Dichloroethane	<0.50	ug/l	UJ	MS/MSD Recovery and MS/MSD RPD	1
LD01022	F39TW01 (20-25)	SW8260	Toluene	<0.50	ug/l	UJ	MS Recovery and MS/MSD RPD	1
LD01022	F39TW01 (20-25)	SW8260	1,2,4-Trichlorobenzene	<0.50	ug/l	UJ	MS Recovery and MS/MSD RPD	1
LD01022	F39TW01 (20-25)	SW8260	Chlorodibromomethane	<0.50	ug/l	UJ	MS/MSD Recovery and MS/MSD RPD	1
LD01022	F39TW01 (20-25)	SW8260	Tetrachloroethene	40	ug/l	J	MS Recovery	1
LD01022	F39TW01 (20-25)	SW8260	Xylenes (total)	<0.50	ug/l	UJ	MS Recovery and MS/MSD RPD	1
LD01022	F39TW01 (20-25)	SW8260	cis-1,2-Dichloroethene	4.4	ug/l	J	MS/MSD Recovery	1
LD01022	F39TW01 (20-25)	SW8260	trans-1,2-Dichloroethene	0.33	ug/l	J	MS/MSD Recovery	1
LD01022	F39TW01 (20-25)	SW8260	Methyl tert-butyl ether	<0.50	ug/l	UJ	MS/MSD Recovery and MS/MSD RPD	1
LD01022	F39TW01 (20-25)	SW8260	m-Dichlorobenzene	<0.50	ug/l	UJ	MS Recovery and MS/MSD RPD	1
LD01022	F39TW01 (20-25)	SW8260	Carbon Tetrachloride	<0.50	ug/l	UJ	MS/MSD Recovery and MS/MSD RPD	1
LD01022	F39TW01 (20-25)	SW8260	2-Hexanone	<10.0	ug/l	UJ	MS/MSD RPD	1

SDG	Sample ID	Method	Analyte	Result	Units	Qualifier	Reason	Dilution
LD01022	F39TW01 (20-25)	SW8260	Acetone	2.9	ug/l	J	MS/MSD Recovery	1
LD01022	F39TW01 (20-25)	SW8260	4-Methyl-2-pentanone	<10.0	ug/l	UJ	MS Recovery and MS/MSD RPD	1
LD01022	F39TW01 (20-25)	SW8270	Di-n-octyl phthalate	<5.4	ug/l	UJ	MS/MSD Recovery	1
LD01022	F39TW01 (20-25)	SW8270	Dibenzo(a,h)anthracene	<1.1	ug/l	UJ	MS/MSD Recovery	1
LD01022	F39TW01 (20-25)	SW8270	Benzo(a)anthracene	<1.1	ug/l	UJ	MS/MSD Recovery	1
LD01022	F39TW01 (20-25)	SW8270	Benzo(g,h,i)perylene	<1.1	ug/l	R	MS Recovery	1
LD01022	F39TW01 (20-25)	SW8270	Indeno(1,2,3-cd)pyrene	<1.1	ug/l	UJ	MS/MSD Recovery	1
LD01022	F39TW01 (20-25)	SW8270	1,2-Benz-phenanthracene	<1.1	ug/l	UJ	MS/MSD Recovery	1
LD01022	F39TW01 (30-35)	SW8260	1,2-Dibromo-3-chloropropane (DBCP)	<0.50	ug/l	UJ	LCSD Recovery	1
LD01022	F39TW02 (10-15)	SW8260	Bromomethane	<0.50	ug/l	UJ	LCS/LCSD RPD	1
LD01022	F39TW02 (10-15)	SW8260	Methylene Chloride	0.2	ug/l	UB	Blank Contamination	1
LD01022	F39TW02 (20-25)	SW8260	1,2-Dibromo-3-chloropropane (DBCP)	<0.50	ug/l	UJ	LCSD Recovery	1
LD01022	F39TW02 (30-35)	SW8260	1,2-Dibromo-3-chloropropane (DBCP)	<0.50	ug/l	UJ	LCSD Recovery	1
LD01022	F39TW02 (40-45)	SW8260	1,2-Dibromo-3-chloropropane (DBCP)	<0.50	ug/l	UJ	LCSD Recovery	1
LD01022	F39TW03 (10-15)	SW8260	Bromomethane	<0.50	ug/l	UJ	LCS/LCSD RPD	1

SDG	Sample ID	Method	Analyte	Result	Units	Qualifier	Reason	Dilution
LD01022	F39TW03 (10-15)	SW8260	Methylene Chloride	0.18	ug/l	UB	Blank Contamination	1
LD01022	F39TW03 (10-15)	SW8260	Acetone	5	ug/l	UB	Blank Contamination	1
LD01022	F39TW03 (20-25)	SW8260	Acetone	3.4	ug/l	UB	Blank Contamination	1
LD01022	F39TW03 (20-25)	SW8260	Carbon disulfide	0.14	ug/l	UB	Blank Contamination	1
LD01022	F39TW03 (20-25)	SW8260	Methylene Chloride	0.17	ug/l	UB	Blank Contamination	1
LD01022	F39TW03 (30-35)	SW8260	Methylene Chloride	0.2	ug/l	UB	Blank Contamination	1
LD01022	F39TW03 (30-35)	SW8260	Acetone	2.4	ug/l	UB	Blank Contamination	1
LD01022	F39TW03 (40-45)	SW8260	Methylene Chloride	0.2	ug/l	UB	Blank Contamination	1
LD01022	F39TW03 (40-45)	SW8260	Acetone	5.2	ug/l	UB	Blank Contamination	1
LD01022	F39TW03 (40-45)	SW8260	Bromomethane	<0.50	ug/l	UJ	LCS/LCSD RPD	1
LD01022	F39TW03 (40-45)	SW8270	Acenaphthylene	<1.0	ug/l	R	Surrogate Recovery	1
LD01022	F39TW03 (40-45)	SW8270	Di-n-butyl phthalate	<5.2	ug/l	R	Surrogate Recovery	1
LD01022	F39TW03 (40-45)	SW8270	Hexachlorobenzene	<1.0	ug/l	R	Surrogate Recovery	1
LD01022	F39TW03 (40-45)	SW8270	Anthracene	<1.0	ug/l	R	Surrogate Recovery	1
LD01022	F39TW03 (40-45)	SW8270	2,4-Dinitrotoluene	<2.1	ug/l	R	Surrogate Recovery	1

SDG	Sample ID	Method	Analyte	Result	Units	Qualifier	Reason	Dilution
LD01022	F39TW03 (40-45)	SW8270	Pyrene	<1.0	ug/l	R	Surrogate Recovery	1
LD01022	F39TW03 (40-45)	SW8270	Dimethyl Phthalate	<5.2	ug/l	R	Surrogate Recovery	1
LD01022	F39TW03 (40-45)	SW8270	Dibenzofuran	<1.0	ug/l	R	Surrogate Recovery	1
LD01022	F39TW03 (40-45)	SW8270	Atrazine	<1.0	ug/l	R	Surrogate Recovery	1
LD01022	F39TW03 (40-45)	SW8270	Benzo(g,h,i)perylene	<1.0	ug/l	R	Surrogate Recovery	1
LD01022	F39TW03 (40-45)	SW8270	Indeno(1,2,3-cd)pyrene	<1.0	ug/l	R	Surrogate Recovery	1
LD01022	F39TW03 (40-45)	SW8270	Benzo(b)fluoranthene	<1.0	ug/l	R	Surrogate Recovery	1
LD01022	F39TW03 (40-45)	SW8270	bis(2-Ethylhexyl)phthalate	<5.2	ug/l	R	Surrogate Recovery	1
LD01022	F39TW03 (40-45)	SW8270	Benzo(k)fluoranthene	<1.0	ug/l	R	Surrogate Recovery	1
LD01022	F39TW03 (40-45)	SW8270	bis(2-Chloroethoxy)methane	<1.0	ug/l	R	Surrogate Recovery	1
LD01022	F39TW03 (40-45)	SW8270	1,2-Benz-phenanthracene	<1.0	ug/l	R	Surrogate Recovery	1
LD01022	F39TW03 (40-45)	SW8270	Benzo(a)pyrene	<1.0	ug/l	R	Surrogate Recovery	1
LD01022	F39TW03 (40-45)	SW8270	Dibenzo(a,h)anthracene	<1.0	ug/l	R	Surrogate Recovery	1
LD01022	F39TW03 (40-45)	SW8270	Benzo(a)anthracene	<1.0	ug/l	R	Surrogate Recovery	1
LD01022	F39TW03 (40-45)	SW8270	2,6-Dinitroluene	<2.1	ug/l	R	Surrogate Recovery	1

SDG	Sample ID	Method	Analyte	Result	Units	Qualifier	Reason	Dilution
LD01022	F39TW03 (40-45)	SW8270	N-Nitroso di-n-propylamine	<1.0	ug/l	R	Surrogate Recovery	1
LD01022	F39TW03 (40-45)	SW8270	Hexachloroethane	<1.0	ug/l	R	Surrogate Recovery	1
LD01022	F39TW03 (40-45)	SW8270	4-Chlorophenyl Phenyl Ether	<1.0	ug/l	R	Surrogate Recovery	1
LD01022	F39TW03 (40-45)	SW8270	Hexachlorocyclopentadiene	<5.2	ug/l	R	Surrogate Recovery	1
LD01022	F39TW03 (40-45)	SW8270	3,5,5-Trimethyl-2-cyclohexene-1-one	<1.0	ug/l	R	Surrogate Recovery	1
LD01022	F39TW03 (40-45)	SW8270	Acenaphthene	<1.0	ug/l	R	Surrogate Recovery	1
LD01022	F39TW03 (40-45)	SW8270	Diethyl phthalate	<5.2	ug/l	R	Surrogate Recovery	1
LD01022	F39TW03 (40-45)	SW8270	Fluoranthene	<1.0	ug/l	R	Surrogate Recovery	1
LD01022	F39TW03 (40-45)	SW8270	2-Nitroaniline	<2.1	ug/l	R	Surrogate Recovery	1
LD01022	F39TW03 (40-45)	SW8270	p-Nitroaniline	<2.1	ug/l	R	Surrogate Recovery	1
LD01022	F39TW03 (40-45)	SW8270	3-Nitroaniline	<2.1	ug/l	R	Surrogate Recovery	1
LD01022	F39TW03 (40-45)	SW8270	Nitrobenzene	<1.0	ug/l	R	Surrogate Recovery	1
LD01022	F39TW03 (40-45)	SW8270	Acetophenone	<1.0	ug/l	R	Surrogate Recovery	1
LD01022	F39TW03 (40-45)	SW8270	1,1'-Biphenyl	<1.0	ug/l	R	Surrogate Recovery	1
LD01022	F39TW03 (40-45)	SW8270	3,3'-Dichlorobenzidine	<5.2	ug/l	R	Surrogate Recovery	1

SDG	Sample ID	Method	Analyte	Result	Units	Qualifier	Reason	Dilution
LD01022	F39TW03 (40-45)	SW8270	2-Chloronaphthalene	<1.0	ug/l	R	Surrogate Recovery	1
LD01022	F39TW03 (40-45)	SW8270	Di-n-octyl phthalate	<5.2	ug/l	R	Surrogate Recovery	1
LD01022	F39TW03 (40-45)	SW8270	Naphthalene	<1.0	ug/l	R	Surrogate Recovery	1
LD01022	F39TW03 (40-45)	SW8270	Hexachloro-1,3-Butadiene	<1.0	ug/l	R	Surrogate Recovery	1
LD01022	F39TW03 (40-45)	SW8270	4-Bromophenyl Phenyl Ether	<1.0	ug/l	R	Surrogate Recovery	1
LD01022	F39TW03 (40-45)	SW8270	bis(2-Chloroethoxy) ether	<1.0	ug/l	R	Surrogate Recovery	1
LD01022	F39TW03 (40-45)	SW8270	bis(2-chloroisopropyl) ether	<1.0	ug/l	R	Surrogate Recovery	1
LD01022	F39TW03 (40-45)	SW8270	2-Methyl naphthalene	<1.0	ug/l	R	Surrogate Recovery	1
LD01022	F39TW03 (40-45)	SW8270	Caprolactam	<5.2	ug/l	R	Surrogate Recovery	1
LD01022	F39TW03 (40-45)	SW8270	Carbazole	<1.0	ug/l	R	Surrogate Recovery	1
LD01022	F39TW03 (40-45)	SW8270	Benzaldehyde	<5.2	ug/l	R	Surrogate Recovery	1
LD01022	F39TW03 (40-45)	SW8270	Phenanthrene	<1.0	ug/l	R	Surrogate Recovery	1
LD01022	F39TW03 (40-45)	SW8270	Benzyl Butyl Phthalate	<5.2	ug/l	R	Surrogate Recovery	1
LD01022	F39TW03 (40-45)	SW8270	N-Nitrosodiphenylamine	<1.0	ug/l	R	Surrogate Recovery	1
LD01022	F39TW03 (40-45)	SW8270	Fluorene	<1.0	ug/l	R	Surrogate Recovery	1

SDG	Sample ID	Method	Analyte	Result	Units	Qualifier	Reason	Dilution
LD01022	F39TW03 (40-45)	SW8270	p-Chloroaniline	<1.0	ug/l	R	Surrogate Recovery	1
LD01022	F39TW04 (10-15)	SW8260	Acetone	3.5	ug/l	UB	Blank Contamination	1
LD01022	F39TW04 (10-15)	SW8260	Methylene Chloride	0.19	ug/l	UB	Blank Contamination	1
LD01022	F39TW04 (10-15)	SW8260	Carbon disulfide	0.18	ug/l	UB	Blank Contamination	1
LD01022	F39TW04 (20-25)	SW8260	Acetone	4.3	ug/l	UB	Blank Contamination	1
LD01022	F39TW04 (20-25)	SW8260	Methylene Chloride	0.17	ug/l	UB	Blank Contamination	1
LD01022	F39TW04 (20-25)	SW8260	Carbon disulfide	0.4	ug/l	UB	Blank Contamination	1
LD01022	F39TW04 (30-35)	SW8260	Carbon disulfide	0.8	ug/l	UB	Blank Contamination	1
LD01022	F39TW04 (30-35)	SW8260	Methylene Chloride	0.17	ug/l	UB	Blank Contamination	1
LD01022	F39TW04 (30-35)	SW8260	Acetone	5.8	ug/l	UB	Blank Contamination	1
LD01022	F39TW04 (40-45)	SW8260	Methylene Chloride	0.2	ug/l	UB	Blank Contamination	1
LD01022	F39TW04 (40-45)	SW8260	Acetone	8.6	ug/l	UB	Blank Contamination	1
LD09009	G4MW033 (040710)	SW6010	Arsenic	0.0047	mg/l	UB	Blank Contamination	1
LD09009	G4MW033 (040710)	SW8260	Methylene Chloride	0.24	ug/l	UB	Blank Contamination	1
LD09009	G4MW033 (040710)	SW8260	Acetone	3.6	ug/l	UB	Blank Contamination	1

SDG	Sample ID	Method	Analyte	Result	Units	Qualifier	Reason	Dilution
LD09009	G4MW034 (040610)	SW6010	Silver	0.0008	mg/l	UB	Blank Contamination	1
LD09009	G4MW034 (040610)	SW6010	Arsenic	0.0049	mg/l	UB	Blank Contamination	1
LD09009	G4MW034 (040610)	SW8260	Acetone	1.8	ug/l	UB	Blank Contamination	1
LD09009	G4MW034 (040610)	SW8260	Methylene Chloride	0.23	ug/l	UB	Blank Contamination	1
LD09009	G4MW034 (040610)	SW8270	bis(2-Ethylhexyl)phthalate	<5.1	ug/l	UJ	MS/MSD RPD	1
LD09009	G4MW034 (040610)	SW8270	p-Nitroaniline	<2.0	ug/l	R	MSD Recovery	1
LD09009	G4MW034 (040610)	SW8270	bis(2-Chloroethoxy)methane	<1.0	ug/l	UJ	MS/MSD Recovery	1
LD09009	G4MW034 (040610)	SW8270	N-Nitrosodiphenylamine	<1.0	ug/l	UJ	MS/MSD RPD	1
LD09009	G4MW034 (040610)	SW8270	Di-n-octyl phthalate	<5.1	ug/l	UJ	MS/MSD RPD	1
LD09009	G4MW034 (040610)	SW8270	Benzo(g,h,i)perylene	<1.0	ug/l	UJ	MS/MSD RPD	1
LD09009	G4MW034 (040610)	SW8270	Indeno(1,2,3-cd)pyrene	<1.0	ug/l	UJ	MS/MSD RPD	1
LD09009	G4MW034 (040610)	SW8270	Benzo(b)fluoranthene	<1.0	ug/l	UJ	MS/MSD RPD	1
LD09009	G4MW034 (040610)	SW8270	Benzo(k)fluoranthene	<1.0	ug/l	UJ	MS/MSD RPD	1
LD09009	G4MW034 (040610)	SW8270	Benzo(a)pyrene	<1.0	ug/l	UJ	MS/MSD RPD	1
LD09009	G4MW034 (040610)	SW8270	Dibenzo(a,h)anthracene	<1.0	ug/l	UJ	MSD Recovery and MS/MSD RPD	1

SDG	Sample ID	Method	Analyte	Result	Units	Qualifier	Reason	Dilution
LD09009	G4MW034 (040610)	SW8270	N-Nitroso di-n-propylamine	<1.0	ug/l	UJ	MS Recovery	1
LD09009	G4MW034 (040610)	SW8270	3,5,5-Trimethyl-2-cyclohexene-1-one	<1.0	ug/l	UJ	MS Recovery	1
LD09009	G4MW034 (040610)	SW8270	Carbazole	<1.0	ug/l	UJ	MSD Recovery and MS/MSD RPD	1
LD09009	G4MW034 (040610)	SW8270	2-Methyl naphthalene	<1.0	ug/l	UJ	MS Recovery	1
LD09009	G4MW034 (040610)	SW8270	3-Nitroaniline	<2.0	ug/l	R	MSD Recovery	1
LD09009	G4MW034 (040610)	SW8270	p-Chloroaniline	<1.0	ug/l	R	MSD Recovery	1
LD09009	G4MW034 (040610)	SW8270	Naphthalene	<1.0	ug/l	UJ	MS Recovery	1
LD09009	G4MW035 (040610)	SW8260	Methylene Chloride	0.23	ug/l	UB	Blank Contamination	1
LD09009	G4MW035 (040610)	SW8260	Acetone	4.3	ug/l	UB	Blank Contamination	1
LD09009	G4MW036 (040610)	SW6010	Arsenic	0.0099	mg/l	UB	Blank Contamination	1
LD09009	G4MW036 (040610)	SW8260	Methylene Chloride	0.26	ug/l	UB	Blank Contamination	1
LD09009	G4MW036 (040610)	SW8260	Acetone	9.6	ug/l	UB	Blank Contamination	1
LD09009	Trip Blank (040810)	SW8260	Methylene Chloride	0.25	ug/l	UB	Blank Contamination	1
LD09009	Trip Blank (040810)	SW8260	Acetone	2.2	ug/l	UB	Blank Contamination	1
LD09018	DUP01 (040810)	SW6010	Arsenic	0.016	mg/l	UB	Blank Contamination	1

SDG	Sample ID	Method	Analyte	Result	Units	Qualifier	Reason	Dilution
LD09018	DUP01 (040810)	SW8260	Bromomethane	<0.50	ug/l	UJ	LCS/LCSD RPD	1
LD09018	DUP01 (040810)	SW8260	Trichloroethylene	4.3	ug/l	J	FD RPD	1
LD09018	DUP01 (040810)	SW8270	Benzo(b)fluoranthene	<1.0	ug/l	UJ	LCS Recovery	1
LD09018	DUP01 (040810)	SW8270	Anthracene	<1.0	ug/l	UJ	LCS Recovery	1
LD09018	DUP01 (040810)	SW8270	Pyrene	<1.0	ug/l	UJ	LCS Recovery	1
LD09018	DUP01 (040810)	SW8270	Benzo(g,h,i)perylene	<1.0	ug/l	UJ	LCS Recovery	1
LD09018	DUP01 (040810)	SW8270	Indeno(1,2,3-cd)pyrene	<1.0	ug/l	UJ	LCS Recovery	1
LD09018	DUP01 (040810)	SW8270	Fluoranthene	<1.0	ug/l	UJ	LCS Recovery	1
LD09018	DUP01 (040810)	SW8270	1,2-Benz-phenanthracene	<1.0	ug/l	UJ	LCS Recovery	1
LD09018	DUP01 (040810)	SW8270	Benzo(a)pyrene	<1.0	ug/l	UJ	LCS Recovery	1
LD09018	DUP01 (040810)	SW8270	Benzyl Butyl Phthalate	<5.0	ug/l	UJ	LCS Recovery	1
LD09018	DUP01 (040810)	SW8270	Phenanthrene	<1.0	ug/l	UJ	LCS Recovery	1
LD09018	DUP01 (040810)	SW8270	Acenaphthene	<1.0	ug/l	UJ	LCS Recovery	1
LD09018	DUP01 (040810)	SW8270	Dibenzo(a,h)anthracene	<1.0	ug/l	UJ	LCS Recovery	1
LD09018	DUP01 (040810)	SW8270	Benzo(a)anthracene	<1.0	ug/l	UJ	LCS Recovery	1

SDG	Sample ID	Method	Analyte	Result	Units	Qualifier	Reason	Dilution
LD09018	DUP01 (040810)	SW8270	4-Bromophenyl Phenyl Ether	<1.0	ug/l	UJ	LCS Recovery	1
LD09018	DUP-4 (040710)	SW8260	Methylene Chloride	0.26	ug/l	UB	Blank Contamination	1
LD09018	F39SED01 (040810)	SW6010	Selenium	0.35	mg/kg	UB	Blank Contamination	1
LD09018	F39SED01 (040810)	SW8270	2,4-Dinitrophenol	<450.0	ug/kg	UJ	MS/MSD RPD	1
LD09018	F39SED01 (040810)	SW8270	Hexachloroethane	<92.0	ug/kg	UJ	MS Recovery and MS/MSD RPD	1
LD09018	F39SED01 (040810)	SW8270	Hexachlorocyclopentadiene	<450.0	ug/kg	UJ	MS/MSD Recovery	1
LD09018	F39SED01 (040810)	SW8270	bis(2-chloroisopropyl) ether	<92.0	ug/kg	UJ	MS/MSD RPD	1
LD09018	F39SED01 (040810)	SW8270	Pyrene	<92.0	ug/kg	UJ	MS/MSD RPD	1
LD09018	F39SED01 (040810)	SW8270	bis(2-Chloroethoxy) ether	<92.0	ug/kg	UJ	MS/MSD RPD	1
LD09018	F39SED01 (040810)	SW8270	1,2-Benz-phenanthracene	<92.0	ug/kg	UJ	MS/MSD RPD	1
LD09018	F39SED01 (040810)	SW8270	Hexachloro-1,3-Butadiene	<92.0	ug/kg	UJ	MS/MSD RPD	1
LD09018	F39SED02 (040810)	SW6010	Cadmium	0.11	mg/kg	UB	Blank Contamination	1
LD09018	F39SED02 (040810)	SW6010	Selenium	0.4	mg/kg	UB	Blank Contamination	1
LD09018	F39SED03 (040810)	SW6010	Cadmium	0.096	mg/kg	UB	Blank Contamination	1
LD09018	F39SED03 (040810)	SW6010	Selenium	0.51	mg/kg	UB	Blank Contamination	1

SDG	Sample ID	Method	Analyte	Result	Units	Qualifier	Reason	Dilution
LD09018	F39SED04 (040810)	SW6010	Cadmium	0.053	mg/kg	UB	Blank Contamination	1
LD09018	F39SED04 (040810)	SW6010	Selenium	0.26	mg/kg	UB	Blank Contamination	1
LD09018	F39SED05 (040810)	SW6010	Selenium	0.21	mg/kg	UB	Blank Contamination	1
LD09018	F39SED05 (040810)	SW6010	Cadmium	0.033	mg/kg	UB	Blank Contamination	1
LD09018	F39SED06 (040810)	SW6010	Cadmium	0.11	mg/kg	UB	Blank Contamination	1
LD09018	F39SED06 (040810)	SW6010	Selenium	0.33	mg/kg	UB	Blank Contamination	1
LD09018	F39SED07 (040810)	SW6010	Cadmium	0.087	mg/kg	UB	Blank Contamination	1
LD09018	F39SED08 (040810)	SW6010	Selenium	1	mg/kg	UB	Blank Contamination	1
LD09018	F39SW-01 (040810)	SW6010	Silver	0.0005	mg/l	UB	Blank Contamination	1
LD09018	F39SW-01 (040810)	SW8260	Trichloroethylene	1.5	ug/l	J	FD RPD	1
LD09018	F39SW-01 (040810)	SW8260	Acetone	1.7	ug/l	UB	Blank Contamination	1
LD09018	F39SW-01 (040810)	SW8260	Methylene Chloride	0.23	ug/l	UB	Blank Contamination	1
LD09018	F39SW-01 (040810)	SW8260	Bromomethane	<0.50	ug/l	UJ	LCS/LCSD RPD	1
LD09018	F39SW-01 (040810)	SW8270	Benzyl Butyl Phthalate	<5.0	ug/l	UJ	LCS Recovery	1
LD09018	F39SW-01 (040810)	SW8270	Benzo(a)anthracene	<1.0	ug/l	UJ	LCS Recovery	1

SDG	Sample ID	Method	Analyte	Result	Units	Qualifier	Reason	Dilution
LD09018	F39SW-01 (040810)	SW8270	N-Nitroso di-n-propylamine	<1.0	ug/l	UJ	MS/MSD RPD	1
LD09018	F39SW-01 (040810)	SW8270	Hexachloroethane	<1.0	ug/l	UJ	MS/MSD RPD	1
LD09018	F39SW-01 (040810)	SW8270	Acenaphthene	<1.0	ug/l	UJ	LCS Recovery	1
LD09018	F39SW-01 (040810)	SW8270	Pyrene	<1.0	ug/l	UJ	LCS Recovery	1
LD09018	F39SW-01 (040810)	SW8270	Dibenzo(a,h)anthracene	<1.0	ug/l	UJ	LCS Recovery and MS/MSD RPD	1
LD09018	F39SW-01 (040810)	SW8270	N-Nitrosodiphenylamine	<1.0	ug/l	UJ	MS/MSD RPD	1
LD09018	F39SW-01 (040810)	SW8270	Carbazole	<1.0	ug/l	UJ	LCS Recovery and MS/MSD RPD	1
LD09018	F39SW-01 (040810)	SW8270	2-Chlorophenol	<1.0	ug/l	UJ	MS/MSD RPD	1
LD09018	F39SW-01 (040810)	SW8270	Nitrobenzene	<1.0	ug/l	UJ	MS/MSD RPD	1
LD09018	F39SW-01 (040810)	SW8270	3-Nitroaniline	<2.0	ug/l	R	LCS Recovery	1
LD09018	F39SW-01 (040810)	SW8270	Phenanthrene	<1.0	ug/l	UJ	LCS Recovery	1
LD09018	F39SW-01 (040810)	SW8270	p-Nitroaniline	<2.0	ug/l	UJ	MS/MSD RPD	1
LD09018	F39SW-01 (040810)	SW8270	1,2-Benz-phenanthracene	<1.0	ug/l	UJ	LCS Recovery	1
LD09018	F39SW-01 (040810)	SW8270	Benzo(k)fluoranthene	<1.0	ug/l	UJ	MS/MSD RPD	1
LD09018	F39SW-01 (040810)	SW8270	Fluoranthene	<1.0	ug/l	UJ	LCS Recovery	1

SDG	Sample ID	Method	Analyte	Result	Units	Qualifier	Reason	Dilution
LD09018	F39SW-01 (040810)	SW8270	Benzo(b)fluoranthene	<1.0	ug/l	UJ	LCS Recovery and MS/MSD RPD	1
LD09018	F39SW-01 (040810)	SW8270	Benzo(g,h,i)perylene	<1.0	ug/l	UJ	LCS Recovery and MS/MSD RPD	1
LD09018	F39SW-01 (040810)	SW8270	Anthracene	<1.0	ug/l	UJ	LCS Recovery	1
LD09018	F39SW-01 (040810)	SW8270	Di-n-octyl phthalate	<5.0	ug/l	UJ	MS/MSD RPD	1
LD09018	F39SW-01 (040810)	SW8270	bis(2-Chloroethoxy)methane	<1.0	ug/l	UJ	LCS Recovery and MS/MSD RPD	1
LD09018	F39SW-01 (040810)	SW8270	p-Chloroaniline	<1.0	ug/l	R	LCS Recovery	1
LD09018	F39SW-01 (040810)	SW8270	4-Bromophenyl Phenyl Ether	<1.0	ug/l	UJ	LCS Recovery	1
LD09018	F39SW-01 (040810)	SW8270	Benzo(a)pyrene	<1.0	ug/l	UJ	LCS Recovery and MS/MSD RPD	1
LD09018	F39SW-01 (040810)	SW8270	Indeno(1,2,3-cd)pyrene	<1.0	ug/l	UJ	LCS Recovery and MS/MSD RPD	1
LD09018	F39SW-02 (040810)	SW6010	Arsenic	0.006	mg/l	UB	Blank Contamination	1
LD09018	F39SW-02 (040810)	SW6010	Silver	0.0011	mg/l	UB	Blank Contamination	1
LD09018	F39SW-02 (040810)	SW8260	Acetone	4	ug/l	UB	Blank Contamination	1
LD09018	F39SW-02 (040810)	SW8260	Bromomethane	<0.50	ug/l	UJ	LCS/LCSD RPD	1
LD09018	F39SW-02 (040810)	SW8260	Methylene Chloride	0.22	ug/l	UB	Blank Contamination	1
LD09018	F39SW-02 (040810)	SW8270	Benzo(a)pyrene	<1.0	ug/l	UJ	LCS Recovery	1

SDG	Sample ID	Method	Analyte	Result	Units	Qualifier	Reason	Dilution
LD09018	F39SW-02 (040810)	SW8270	Pyrene	<1.0	ug/l	UJ	LCS Recovery	1
LD09018	F39SW-02 (040810)	SW8270	Benzyl Butyl Phthalate	<5.0	ug/l	UJ	LCS Recovery	1
LD09018	F39SW-02 (040810)	SW8270	Phenanthrene	<1.0	ug/l	UJ	LCS Recovery	1
LD09018	F39SW-02 (040810)	SW8270	Acenaphthene	<1.0	ug/l	UJ	LCS Recovery	1
LD09018	F39SW-02 (040810)	SW8270	Benzo(a)anthracene	<1.0	ug/l	UJ	LCS Recovery	1
LD09018	F39SW-02 (040810)	SW8270	Dibenzo(a,h)anthracene	<1.0	ug/l	UJ	LCS Recovery	1
LD09018	F39SW-02 (040810)	SW8270	Anthracene	<1.0	ug/l	UJ	LCS Recovery	1
LD09018	F39SW-02 (040810)	SW8270	Fluoranthene	<1.0	ug/l	UJ	LCS Recovery	1
LD09018	F39SW-02 (040810)	SW8270	Benzo(b)fluoranthene	<1.0	ug/l	UJ	LCS Recovery	1
LD09018	F39SW-02 (040810)	SW8270	4-Bromophenyl Phenyl Ether	<1.0	ug/l	UJ	LCS Recovery	1
LD09018	F39SW-02 (040810)	SW8270	Benzo(g,h,i)perylene	<1.0	ug/l	UJ	LCS Recovery	1
LD09018	F39SW-02 (040810)	SW8270	Indeno(1,2,3-cd)pyrene	<1.0	ug/l	UJ	LCS Recovery	1
LD09018	F39SW-02 (040810)	SW8270	1,2-Benz-phenanthracene	<1.0	ug/l	UJ	LCS Recovery	1
LD09018	F39SW-03 (040810)	SW8260	Bromomethane	<0.50	ug/l	UJ	LCS/LCSD RPD	1
LD09018	F39SW-03 (040810)	SW8260	Acetone	5.9	ug/l	UB	Blank Contamination	1

SDG	Sample ID	Method	Analyte	Result	Units	Qualifier	Reason	Dilution
LD09018	F39SW-03 (040810)	SW8260	Methylene Chloride	0.2	ug/l	UB	Blank Contamination	1
LD09018	F39SW-03 (040810)	SW8270	Benzo(a)pyrene	<1.0	ug/l	UJ	LCS Recovery	1
LD09018	F39SW-03 (040810)	SW8270	Phenanthrene	<1.0	ug/l	UJ	LCS Recovery	1
LD09018	F39SW-03 (040810)	SW8270	Acenaphthene	<1.0	ug/l	UJ	LCS Recovery	1
LD09018	F39SW-03 (040810)	SW8270	Benzo(a)anthracene	<1.0	ug/l	UJ	LCS Recovery	1
LD09018	F39SW-03 (040810)	SW8270	Dibenzo(a,h)anthracene	<1.0	ug/l	UJ	LCS Recovery	1
LD09018	F39SW-03 (040810)	SW8270	Benzyl Butyl Phthalate	<5.0	ug/l	UJ	LCS Recovery	1
LD09018	F39SW-03 (040810)	SW8270	Fluoranthene	<1.0	ug/l	UJ	LCS Recovery	1
LD09018	F39SW-03 (040810)	SW8270	Benzo(b)fluoranthene	<1.0	ug/l	UJ	LCS Recovery	1
LD09018	F39SW-03 (040810)	SW8270	Indeno(1,2,3-cd)pyrene	<1.0	ug/l	UJ	LCS Recovery	1
LD09018	F39SW-03 (040810)	SW8270	Benzo(g,h,i)perylene	<1.0	ug/l	UJ	LCS Recovery	1
LD09018	F39SW-03 (040810)	SW8270	Pyrene	<1.0	ug/l	UJ	LCS Recovery	1
LD09018	F39SW-03 (040810)	SW8270	4-Bromophenyl Phenyl Ether	<1.0	ug/l	UJ	LCS Recovery	1
LD09018	F39SW-03 (040810)	SW8270	Anthracene	<1.0	ug/l	UJ	LCS Recovery	1
LD09018	F39SW-03 (040810)	SW8270	1,2-Benz-phenanthracene	<1.0	ug/l	UJ	LCS Recovery	1

SDG	Sample ID	Method	Analyte	Result	Units	Qualifier	Reason	Dilution
LD09018	F39SW-04 (040810)	SW6010	Arsenic	0.017	mg/l	UB	Blank Contamination	1
LD09018	F39SW-04 (040810)	SW8260	Acetone	3.8	ug/l	UB	Blank Contamination	1
LD09018	F39SW-04 (040810)	SW8260	Bromomethane	<0.50	ug/l	UJ	LCS/LCSD RPD	1
LD09018	F39SW-04 (040810)	SW8260	Methylene Chloride	0.22	ug/l	UB	Blank Contamination	1
LD09018	F39SW-04 (040810)	SW8270	Benzo(a)pyrene	<1.0	ug/l	UJ	LCS Recovery	1
LD09018	F39SW-04 (040810)	SW8270	Benzyl Butyl Phthalate	<5.0	ug/l	UJ	LCS Recovery	1
LD09018	F39SW-04 (040810)	SW8270	Phenanthrene	<1.0	ug/l	UJ	LCS Recovery	1
LD09018	F39SW-04 (040810)	SW8270	Acenaphthene	<1.0	ug/l	UJ	LCS Recovery	1
LD09018	F39SW-04 (040810)	SW8270	Pyrene	<1.0	ug/l	UJ	LCS Recovery	1
LD09018	F39SW-04 (040810)	SW8270	Benzo(a)anthracene	<1.0	ug/l	UJ	LCS Recovery	1
LD09018	F39SW-04 (040810)	SW8270	Dibenzo(a,h)anthracene	<1.0	ug/l	UJ	LCS Recovery	1
LD09018	F39SW-04 (040810)	SW8270	1,2-Benz-phenanthracene	<1.0	ug/l	UJ	LCS Recovery	1
LD09018	F39SW-04 (040810)	SW8270	Fluoranthene	<1.0	ug/l	UJ	LCS Recovery	1
LD09018	F39SW-04 (040810)	SW8270	Benzo(b)fluoranthene	<1.0	ug/l	UJ	LCS Recovery	1
LD09018	F39SW-04 (040810)	SW8270	Benzo(g,h,i)perylene	<1.0	ug/l	UJ	LCS Recovery	1

SDG	Sample ID	Method	Analyte	Result	Units	Qualifier	Reason	Dilution
LD09018	F39SW-04 (040810)	SW8270	Anthracene	<1.0	ug/l	UJ	LCS Recovery	1
LD09018	F39SW-04 (040810)	SW8270	4-Bromophenyl Phenyl Ether	<1.0	ug/l	UJ	LCS Recovery	1
LD09018	F39SW-04 (040810)	SW8270	Indeno(1,2,3-cd)pyrene	<1.0	ug/l	UJ	LCS Recovery	1
LD09018	F39SW-05 (040810)	SW6010	Arsenic	0.019	mg/l	UB	Blank Contamination	1
LD09018	F39SW-05 (040810)	SW8260	Acetone	7.5	ug/l	UB	Blank Contamination	1
LD09018	F39SW-05 (040810)	SW8260	Methylene Chloride	0.25	ug/l	UB	Blank Contamination	1
LD09018	F39SW-05 (040810)	SW8260	Bromomethane	<0.50	ug/l	UJ	LCS/LCSD RPD	1
LD09018	F39SW-05 (040810)	SW8270	1,2-Benz-phenanthracene	<1.0	ug/l	UJ	LCS Recovery	1
LD09018	F39SW-05 (040810)	SW8270	Benzyl Butyl Phthalate	<5.0	ug/l	UJ	LCS Recovery	1
LD09018	F39SW-05 (040810)	SW8270	Phenanthrene	<1.0	ug/l	UJ	LCS Recovery	1
LD09018	F39SW-05 (040810)	SW8270	Acenaphthene	<1.0	ug/l	UJ	LCS Recovery	1
LD09018	F39SW-05 (040810)	SW8270	Benzo(a)anthracene	<1.0	ug/l	UJ	LCS Recovery	1
LD09018	F39SW-05 (040810)	SW8270	Benzo(a)pyrene	<1.0	ug/l	UJ	LCS Recovery	1
LD09018	F39SW-05 (040810)	SW8270	Fluoranthene	<1.0	ug/l	UJ	LCS Recovery	1
LD09018	F39SW-05 (040810)	SW8270	Benzo(b)fluoranthene	<1.0	ug/l	UJ	LCS Recovery	1

SDG	Sample ID	Method	Analyte	Result	Units	Qualifier	Reason	Dilution
LD09018	F39SW-05 (040810)	SW8270	Indeno(1,2,3-cd)pyrene	<1.0	ug/l	UJ	LCS Recovery	1
LD09018	F39SW-05 (040810)	SW8270	Benzo(g,h,i)perylene	<1.0	ug/l	UJ	LCS Recovery	1
LD09018	F39SW-05 (040810)	SW8270	Pyrene	<1.0	ug/l	UJ	LCS Recovery	1
LD09018	F39SW-05 (040810)	SW8270	Anthracene	<1.0	ug/l	UJ	LCS Recovery	1
LD09018	F39SW-05 (040810)	SW8270	4-Bromophenyl Phenyl Ether	<1.0	ug/l	UJ	LCS Recovery	1
LD09018	F39SW-05 (040810)	SW8270	Dibenzo(a,h)anthracene	<1.0	ug/l	UJ	LCS Recovery	1
LD09018	F39SW-06 (040810)	SW6010	Arsenic	0.019	mg/l	UB	Blank Contamination	1
LD09018	F39SW-06 (040810)	SW8260	Bromomethane	<0.50	ug/l	UJ	LCS/LCSD RPD	1
LD09018	F39SW-06 (040810)	SW8260	Methylene Chloride	0.21	ug/l	UB	Blank Contamination	1
LD09018	F39SW-06 (040810)	SW8270	1,2-Benz-phenanthracene	<1.0	ug/l	UJ	LCS Recovery	1
LD09018	F39SW-06 (040810)	SW8270	Benzyl Butyl Phthalate	<5.0	ug/l	UJ	LCS Recovery	1
LD09018	F39SW-06 (040810)	SW8270	Phenanthrene	<1.0	ug/l	UJ	LCS Recovery	1
LD09018	F39SW-06 (040810)	SW8270	Acenaphthene	<1.0	ug/l	UJ	LCS Recovery	1
LD09018	F39SW-06 (040810)	SW8270	Benzo(a)anthracene	<1.0	ug/l	UJ	LCS Recovery	1
LD09018	F39SW-06 (040810)	SW8270	4-Bromophenyl Phenyl Ether	<1.0	ug/l	UJ	LCS Recovery	1

SDG	Sample ID	Method	Analyte	Result	Units	Qualifier	Reason	Dilution
LD09018	F39SW-06 (040810)	SW8270	Benzo(a)pyrene	<1.0	ug/l	UJ	LCS Recovery	1
LD09018	F39SW-06 (040810)	SW8270	Fluoranthene	<1.0	ug/l	UJ	LCS Recovery	1
LD09018	F39SW-06 (040810)	SW8270	Benzo(b)fluoranthene	<1.0	ug/l	UJ	LCS Recovery	1
LD09018	F39SW-06 (040810)	SW8270	Indeno(1,2,3-cd)pyrene	<1.0	ug/l	UJ	LCS Recovery	1
LD09018	F39SW-06 (040810)	SW8270	Benzo(g,h,i)perylene	<1.0	ug/l	UJ	LCS Recovery	1
LD09018	F39SW-06 (040810)	SW8270	Pyrene	<1.0	ug/l	UJ	LCS Recovery	1
LD09018	F39SW-06 (040810)	SW8270	Anthracene	<1.0	ug/l	UJ	LCS Recovery	1
LD09018	F39SW-06 (040810)	SW8270	Dibenzo(a,h)anthracene	<1.0	ug/l	UJ	LCS Recovery	1
LD09018	F39SW-07 (040810)	SW8260	Bromomethane	<0.50	ug/l	UJ	LCS/LCSD RPD	1
LD09018	F39SW-07 (040810)	SW8260	Acetone	7.6	ug/l	UB	Blank Contamination	1
LD09018	F39SW-07 (040810)	SW8260	Methylene Chloride	0.22	ug/l	UB	Blank Contamination	1
LD09018	F39SW-07 (040810)	SW8270	Fluoranthene	<1.0	ug/l	UJ	LCS Recovery	1
LD09018	F39SW-07 (040810)	SW8270	Phenanthrene	<1.0	ug/l	UJ	LCS Recovery	1
LD09018	F39SW-07 (040810)	SW8270	Acenaphthene	<1.0	ug/l	UJ	LCS Recovery	1
LD09018	F39SW-07 (040810)	SW8270	Benzo(a)anthracene	<1.0	ug/l	UJ	LCS Recovery	1

SDG	Sample ID	Method	Analyte	Result	Units	Qualifier	Reason	Dilution
LD09018	F39SW-07 (040810)	SW8270	Dibenzo(a,h)anthracene	<1.0	ug/l	UJ	LCS Recovery	1
LD09018	F39SW-07 (040810)	SW8270	4-Bromophenyl Phenyl Ether	<1.0	ug/l	UJ	LCS Recovery	1
LD09018	F39SW-07 (040810)	SW8270	1,2-Benz-phenanthracene	<1.0	ug/l	UJ	LCS Recovery	1
LD09018	F39SW-07 (040810)	SW8270	Benzyl Butyl Phthalate	<5.0	ug/l	UJ	LCS Recovery	1
LD09018	F39SW-07 (040810)	SW8270	Benzo(b)fluoranthene	<1.0	ug/l	UJ	LCS Recovery	1
LD09018	F39SW-07 (040810)	SW8270	Indeno(1,2,3-cd)pyrene	<1.0	ug/l	UJ	LCS Recovery	1
LD09018	F39SW-07 (040810)	SW8270	Benzo(g,h,i)perylene	<1.0	ug/l	UJ	LCS Recovery	1
LD09018	F39SW-07 (040810)	SW8270	Pyrene	<1.0	ug/l	UJ	LCS Recovery	1
LD09018	F39SW-07 (040810)	SW8270	Anthracene	<1.0	ug/l	UJ	LCS Recovery	1
LD09018	F39SW-07 (040810)	SW8270	Benzo(a)pyrene	<1.0	ug/l	UJ	LCS Recovery	1
LD09018	F39TW05 (10-15)	SW8260	Bromomethane	<0.50	ug/l	UJ	LCS/LCSD RPD	1
LD09018	F39TW05 (10-15)	SW8260	Methylene Chloride	0.24	ug/l	UB	Blank Contamination	1
LD09018	F39TW05 (20-25)	SW8260	Methylene Chloride	0.23	ug/l	UB	Blank Contamination	1
LD09018	F39TW05 (30-35)	SW8260	Methylene Chloride	0.24	ug/l	UB	Blank Contamination	1
LD09018	F39TW05 (40-45)	SW8260	Methylene Chloride	0.23	ug/l	UB	Blank Contamination	1

SDG	Sample ID	Method	Analyte	Result	Units	Qualifier	Reason	Dilution
LD09018	F39TW06 (10-15)	SW8260	Methylene Chloride	0.22	ug/l	UB	Blank Contamination	1
LD09018	F39TW06 (20-25)	SW8260	Methylene Chloride	0.37	ug/l	UB	Blank Contamination	1
LD09018	F39TW06 (30-35)	SW8260	Methylene Chloride	0.24	ug/l	UB	Blank Contamination	1
LD09018	F39TW06 (40-45)	SW8260	Bromomethane	<1.0	ug/l	UJ	LCS/LCSD RPD	2
LD09018	F39TW06 (40-45)	SW8260	Methylene Chloride	0.59	ug/l	UB	Blank Contamination	2
LD09018	F39TW06 (40-45)	SW8270	4-Chlorophenyl Phenyl Ether	<10.0	ug/l	UJ	Holding Time	1
LD09018	F39TW06 (40-45)	SW8270	bis(2-Chloroethoxy) ether	<10.0	ug/l	UJ	Holding Time	1
LD09018	F39TW06 (40-45)	SW8270	p-Nitroaniline	<20.0	ug/l	UJ	Holding Time	1
LD09018	F39TW06 (40-45)	SW8270	Benzaldehyde	<50.0	ug/l	UJ	Holding Time	1
LD09018	F39TW06 (40-45)	SW8270	4-Bromophenyl Phenyl Ether	<10.0	ug/l	UJ	Holding Time	1
LD09018	F39TW06 (40-45)	SW8270	Caprolactam	<50.0	ug/l	UJ	Holding Time	1
LD09018	F39TW06 (40-45)	SW8270	p-Chloroaniline	<10.0	ug/l	UJ	Holding Time	1
LD09018	F39TW06 (40-45)	SW8270	bis(2-chloroisopropyl) ether	<10.0	ug/l	UJ	Holding Time	1
LD09018	F39TW06 (40-45)	SW8270	Naphthalene	<10.0	ug/l	UJ	Holding Time	1
LD09018	F39TW06 (40-45)	SW8270	Acenaphthene	<10.0	ug/l	UJ	Holding Time	1

SDG	Sample ID	Method	Analyte	Result	Units	Qualifier	Reason	Dilution
LD09018	F39TW06 (40-45)	SW8270	bis(2-Chloroethoxy)methane	<10.0	ug/l	UJ	Holding Time	1
LD09018	F39TW06 (40-45)	SW8270	Di-n-butyl phthalate	<50.0	ug/l	UJ	Holding Time	1
LD09018	F39TW06 (40-45)	SW8270	Phenanthrene	<10.0	ug/l	UJ	Holding Time	1
LD09018	F39TW06 (40-45)	SW8270	Benzyl Butyl Phthalate	<50.0	ug/l	UJ	Holding Time	1
LD09018	F39TW06 (40-45)	SW8270	N-Nitrosodiphenylamine	<10.0	ug/l	UJ	Holding Time	1
LD09018	F39TW06 (40-45)	SW8270	Fluorene	<10.0	ug/l	UJ	Holding Time	1
LD09018	F39TW06 (40-45)	SW8270	Carbazole	<10.0	ug/l	UJ	Holding Time	1
LD09018	F39TW06 (40-45)	SW8270	Hexachlorocyclopentadiene	<50.0	ug/l	UJ	Holding Time	1
LD09018	F39TW06 (40-45)	SW8270	2-Nitroaniline	<20.0	ug/l	UJ	Holding Time	1
LD09018	F39TW06 (40-45)	SW8270	3,5,5-Trimethyl-2-cyclohexene-1-one	<10.0	ug/l	UJ	Holding Time	1
LD09018	F39TW06 (40-45)	SW8270	2-Methyl naphthalene	<10.0	ug/l	UJ	Holding Time	1
LD09018	F39TW06 (40-45)	SW8270	2-Chloronaphthalene	<10.0	ug/l	UJ	Holding Time	1
LD09018	F39TW06 (40-45)	SW8270	3,3'-Dichlorobenzidine	<50.0	ug/l	UJ	Holding Time	1
LD09018	F39TW06 (40-45)	SW8270	1,1'-Biphenyl	<10.0	ug/l	UJ	Holding Time	1
LD09018	F39TW06 (40-45)	SW8270	Acetophenone	<10.0	ug/l	UJ	Holding Time	1

SDG	Sample ID	Method	Analyte	Result	Units	Qualifier	Reason	Dilution
LD09018	F39TW06 (40-45)	SW8270	Nitrobenzene	<10.0	ug/l	UJ	Holding Time	1
LD09018	F39TW06 (40-45)	SW8270	3-Nitroaniline	<20.0	ug/l	UJ	Holding Time	1
LD09018	F39TW06 (40-45)	SW8270	N-Nitroso di-n-propylamine	<10.0	ug/l	UJ	Holding Time	1
LD09018	F39TW06 (40-45)	SW8270	Hexachloro-1,3-Butadiene	<10.0	ug/l	UJ	Holding Time	1
LD09018	F39TW06 (40-45)	SW8270	Benzo(g,h,i)perylene	<10.0	ug/l	UJ	Holding Time	1
LD09018	F39TW06 (40-45)	SW8270	bis(2-Ethylhexyl)phthalate	<50.0	ug/l	UJ	Holding Time	1
LD09018	F39TW06 (40-45)	SW8270	Di-n-octyl phthalate	<50.0	ug/l	UJ	Holding Time	1
LD09018	F39TW06 (40-45)	SW8270	Hexachlorobenzene	<10.0	ug/l	UJ	Holding Time	1
LD09018	F39TW06 (40-45)	SW8270	Anthracene	<10.0	ug/l	UJ	Holding Time	1
LD09018	F39TW06 (40-45)	SW8270	2,4-Dinitrotoluene	<20.0	ug/l	UJ	Holding Time	1
LD09018	F39TW06 (40-45)	SW8270	Pyrene	<10.0	ug/l	UJ	Holding Time	1
LD09018	F39TW06 (40-45)	SW8270	Dimethyl Phthalate	<50.0	ug/l	UJ	Holding Time	1
LD09018	F39TW06 (40-45)	SW8270	Diethyl phthalate	<50.0	ug/l	UJ	Holding Time	1
LD09018	F39TW06 (40-45)	SW8270	Atrazine	<10.0	ug/l	UJ	Holding Time	1
LD09018	F39TW06 (40-45)	SW8270	Hexachloroethane	<10.0	ug/l	UJ	Holding Time	1

SDG	Sample ID	Method	Analyte	Result	Units	Qualifier	Reason	Dilution
LD09018	F39TW06 (40-45)	SW8270	Dibenzo(a,h)anthracene	<10.0	ug/l	UJ	Holding Time	1
LD09018	F39TW06 (40-45)	SW8270	2,6-Dinitroluene	<20.0	ug/l	UJ	Holding Time	1
LD09018	F39TW06 (40-45)	SW8270	Dibenzofuran	<10.0	ug/l	UJ	Holding Time	1
LD09018	F39TW06 (40-45)	SW8270	Benzo(a)anthracene	<10.0	ug/l	UJ	Holding Time	1
LD09018	F39TW06 (40-45)	SW8270	Indeno(1,2,3-cd)pyrene	<10.0	ug/l	UJ	Holding Time	1
LD09018	F39TW06 (40-45)	SW8270	Benzo(a)pyrene	<10.0	ug/l	UJ	Holding Time	1
LD09018	F39TW06 (40-45)	SW8270	1,2-Benz-phenanthracene	<10.0	ug/l	UJ	Holding Time	1
LD09018	F39TW06 (40-45)	SW8270	Acenaphthylene	<10.0	ug/l	UJ	Holding Time	1
LD09018	F39TW06 (40-45)	SW8270	Benzo(k)fluoranthene	<10.0	ug/l	UJ	Holding Time	1
LD09018	F39TW06 (40-45)	SW8270	Fluoranthene	<10.0	ug/l	UJ	Holding Time	1
LD09018	F39TW06 (40-45)	SW8270	Benzo(b)fluoranthene	<10.0	ug/l	UJ	Holding Time	1
LD09018	F39TW07 (10-15)	SW8260	Methylene Chloride	0.25	ug/l	UB	Blank Contamination	1
LD09018	F39TW07 (20-25)	SW8260	Acetone	10	ug/l	UB	Blank Contamination	1
LD09018	F39TW07 (20-25)	SW8260	Bromomethane	<0.50	ug/l	UJ	LCS/LCSD RPD	1
LD09018	F39TW07 (20-25)	SW8260	Methylene Chloride	0.34	ug/l	UB	Blank Contamination	1

SDG	Sample ID	Method	Analyte	Result	Units	Qualifier	Reason	Dilution
LD09018	F39TW07 (30-35)	SW8260	Acetone	4.8	ug/l	UB	Blank Contamination	1
LD09018	F39TW07 (30-35)	SW8260	Methylene Chloride	0.23	ug/l	UB	Blank Contamination	1
LD09018	F39TW07 (40-45)	SW8260	Methylene Chloride	0.27	ug/l	UB	Blank Contamination	1
LD09018	F39TW08 (10-15)	SW8260	Acetone	6	ug/l	UB	Blank Contamination	1
LD09018	F39TW08 (10-15)	SW8260	Methylene Chloride	0.23	ug/l	UB	Blank Contamination	1
LD09018	F39TW08 (10-15)	SW8270	Phenanthrene	<1.0	ug/l	UJ	LCS Recovery	1
LD09018	F39TW08 (10-15)	SW8270	Benzyl Butyl Phthalate	<5.1	ug/l	UJ	LCS Recovery	1
LD09018	F39TW08 (10-15)	SW8270	Acenaphthene	<1.0	ug/l	UJ	LCS Recovery	1
LD09018	F39TW08 (10-15)	SW8270	Benzo(a)anthracene	<1.0	ug/l	UJ	LCS Recovery	1
LD09018	F39TW08 (10-15)	SW8270	Dibenzo(a,h)anthracene	<1.0	ug/l	UJ	LCS Recovery	1
LD09018	F39TW08 (10-15)	SW8270	Benzo(a)pyrene	<1.0	ug/l	UJ	LCS Recovery	1
LD09018	F39TW08 (10-15)	SW8270	Fluoranthene	<1.0	ug/l	UJ	LCS Recovery	1
LD09018	F39TW08 (10-15)	SW8270	Benzo(b)fluoranthene	<1.0	ug/l	UJ	LCS Recovery	1
LD09018	F39TW08 (10-15)	SW8270	Indeno(1,2,3-cd)pyrene	<1.0	ug/l	UJ	LCS Recovery	1
LD09018	F39TW08 (10-15)	SW8270	Benzo(g,h,i)perylene	<1.0	ug/l	UJ	LCS Recovery	1

SDG	Sample ID	Method	Analyte	Result	Units	Qualifier	Reason	Dilution
LD09018	F39TW08 (10-15)	SW8270	4-Bromophenyl Phenyl Ether	<1.0	ug/l	UJ	LCS Recovery	1
LD09018	F39TW08 (10-15)	SW8270	Pyrene	<1.0	ug/l	UJ	LCS Recovery	1
LD09018	F39TW08 (10-15)	SW8270	Anthracene	<1.0	ug/l	UJ	LCS Recovery	1
LD09018	F39TW08 (10-15)	SW8270	1,2-Benz-phenanthracene	<1.0	ug/l	UJ	LCS Recovery	1
LD09018	F39TW08 (20-25)	SW8260	Acetone	6.6	ug/l	UB	Blank Contamination	1
LD09018	F39TW08 (30-35)	SW8260	Acetone	8.3	ug/l	UB	Blank Contamination	1
LD09018	F39TW08 (30-35)	SW8260	Methylene Chloride	0.22	ug/l	UB	Blank Contamination	1
LD09018	F39TW08 (30-35)	SW8270	Acenaphthene	<10.0	ug/l	UJ	Holding Time	1
LD09018	F39TW08 (30-35)	SW8270	Di-n-butyl phthalate	<50.0	ug/l	UJ	Holding Time	1
LD09018	F39TW08 (30-35)	SW8270	Diethyl phthalate	<50.0	ug/l	UJ	Holding Time	1
LD09018	F39TW08 (30-35)	SW8270	Benzyl Butyl Phthalate	<50.0	ug/l	UJ	Holding Time	1
LD09018	F39TW08 (30-35)	SW8270	Phenanthrene	<10.0	ug/l	UJ	Holding Time	1
LD09018	F39TW08 (30-35)	SW8270	3,5,5-Trimethyl-2-cyclohexene-1-one	<10.0	ug/l	UJ	Holding Time	1
LD09018	F39TW08 (30-35)	SW8270	Hexachlorocyclopentadiene	<50.0	ug/l	UJ	Holding Time	1
LD09018	F39TW08 (30-35)	SW8270	4-Chlorophenyl Phenyl Ether	<10.0	ug/l	UJ	Holding Time	1

SDG	Sample ID	Method	Analyte	Result	Units	Qualifier	Reason	Dilution
LD09018	F39TW08 (30-35)	SW8270	N-Nitroso di-n-propylamine	<10.0	ug/l	UJ	Holding Time	1
LD09018	F39TW08 (30-35)	SW8270	N-Nitrosodiphenylamine	<10.0	ug/l	UJ	Holding Time	1
LD09018	F39TW08 (30-35)	SW8270	3-Nitroaniline	<20.0	ug/l	UJ	Holding Time	1
LD09018	F39TW08 (30-35)	SW8270	Hexachloroethane	<10.0	ug/l	UJ	Holding Time	1
LD09018	F39TW08 (30-35)	SW8270	Fluorene	<10.0	ug/l	UJ	Holding Time	1
LD09018	F39TW08 (30-35)	SW8270	Carbazole	<10.0	ug/l	UJ	Holding Time	1
LD09018	F39TW08 (30-35)	SW8270	Hexachloro-1,3-Butadiene	<10.0	ug/l	UJ	Holding Time	1
LD09018	F39TW08 (30-35)	SW8270	2-Nitroaniline	<20.0	ug/l	UJ	Holding Time	1
LD09018	F39TW08 (30-35)	SW8270	Naphthalene	<10.0	ug/l	UJ	Holding Time	1
LD09018	F39TW08 (30-35)	SW8270	2-Methyl naphthalene	<10.0	ug/l	UJ	Holding Time	1
LD09018	F39TW08 (30-35)	SW8270	2-Chloronaphthalene	<10.0	ug/l	UJ	Holding Time	1
LD09018	F39TW08 (30-35)	SW8270	3,3'-Dichlorobenzidine	<50.0	ug/l	UJ	Holding Time	1
LD09018	F39TW08 (30-35)	SW8270	1,1'-Biphenyl	<10.0	ug/l	UJ	Holding Time	1
LD09018	F39TW08 (30-35)	SW8270	Nitrobenzene	<10.0	ug/l	UJ	Holding Time	1
LD09018	F39TW08 (30-35)	SW8270	2,6-Dinitroluene	<20.0	ug/l	UJ	Holding Time	1

SDG	Sample ID	Method	Analyte	Result	Units	Qualifier	Reason	Dilution
LD09018	F39TW08 (30-35)	SW8270	bis(2-chloroisopropyl) ether	<10.0	ug/l	UJ	Holding Time	1
LD09018	F39TW08 (30-35)	SW8270	Acetophenone	<10.0	ug/l	UJ	Holding Time	1
LD09018	F39TW08 (30-35)	SW8270	Dimethyl Phthalate	<50.0	ug/l	UJ	Holding Time	1
LD09018	F39TW08 (30-35)	SW8270	4-Bromophenyl Phenyl Ether	<10.0	ug/l	UJ	Holding Time	1
LD09018	F39TW08 (30-35)	SW8270	Caprolactam	<50.0	ug/l	UJ	Holding Time	1
LD09018	F39TW08 (30-35)	SW8270	p-Chloroaniline	<10.0	ug/l	UJ	Holding Time	1
LD09018	F39TW08 (30-35)	SW8270	bis(2-Chloroethoxy)methane	<10.0	ug/l	UJ	Holding Time	1
LD09018	F39TW08 (30-35)	SW8270	bis(2-Chloroethoxy) ether	<10.0	ug/l	UJ	Holding Time	1
LD09018	F39TW08 (30-35)	SW8270	p-Nitroaniline	<20.0	ug/l	UJ	Holding Time	1
LD09018	F39TW08 (30-35)	SW8270	bis(2-Ethylhexyl)phthalate	<50.0	ug/l	UJ	Holding Time	1
LD09018	F39TW08 (30-35)	SW8270	Di-n-octyl phthalate	<50.0	ug/l	UJ	Holding Time	1
LD09018	F39TW08 (30-35)	SW8270	Hexachlorobenzene	<10.0	ug/l	UJ	Holding Time	1
LD09018	F39TW08 (30-35)	SW8270	Anthracene	<10.0	ug/l	UJ	Holding Time	1
LD09018	F39TW08 (30-35)	SW8270	Benzo(a)anthracene	<10.0	ug/l	UJ	Holding Time	1
LD09018	F39TW08 (30-35)	SW8270	Pyrene	<10.0	ug/l	UJ	Holding Time	1

SDG	Sample ID	Method	Analyte	Result	Units	Qualifier	Reason	Dilution
LD09018	F39TW08 (30-35)	SW8270	Benzaldehyde	<50.0	ug/l	UJ	Holding Time	1
LD09018	F39TW08 (30-35)	SW8270	Dibenzofuran	<10.0	ug/l	UJ	Holding Time	1
LD09018	F39TW08 (30-35)	SW8270	Atrazine	<10.0	ug/l	UJ	Holding Time	1
LD09018	F39TW08 (30-35)	SW8270	Benzo(g,h,i)perylene	<10.0	ug/l	UJ	Holding Time	1
LD09018	F39TW08 (30-35)	SW8270	Indeno(1,2,3-cd)pyrene	<10.0	ug/l	UJ	Holding Time	1
LD09018	F39TW08 (30-35)	SW8270	Benzo(b)fluoranthene	<10.0	ug/l	UJ	Holding Time	1
LD09018	F39TW08 (30-35)	SW8270	Fluoranthene	<10.0	ug/l	UJ	Holding Time	1
LD09018	F39TW08 (30-35)	SW8270	Benzo(k)fluoranthene	<10.0	ug/l	UJ	Holding Time	1
LD09018	F39TW08 (30-35)	SW8270	Acenaphthylene	<10.0	ug/l	UJ	Holding Time	1
LD09018	F39TW08 (30-35)	SW8270	1,2-Benz-phenanthracene	<10.0	ug/l	UJ	Holding Time	1
LD09018	F39TW08 (30-35)	SW8270	Benzo(a)pyrene	<10.0	ug/l	UJ	Holding Time	1
LD09018	F39TW08 (30-35)	SW8270	Dibenzo(a,h)anthracene	<10.0	ug/l	UJ	Holding Time	1
LD09018	F39TW08 (30-35)	SW8270	2,4-Dinitrotoluene	<20.0	ug/l	UJ	Holding Time	1
LD09018	F39TW08 (40-45)	SW8260	Bromomethane	<1.0	ug/l	UJ	LCS/LCSD RPD	2
LD09018	F39TW08 (40-45)	SW8260	Acetone	6.1	ug/l	UB	Blank Contamination	2

SDG	Sample ID	Method	Analyte	Result	Units	Qualifier	Reason	Dilution
LD09018	F39TW08 (40-45)	SW8260	Methylene Chloride	0.66	ug/l	UB	Blank Contamination	2
LD09018	F39TW08 (40-45)	SW8270	Hexachloro-1,3-Butadiene	<10.0	ug/l	R	Surrogate Recovery	1
LD09018	F39TW08 (40-45)	SW8270	N-Nitroso di-n-propylamine	<10.0	ug/l	R	Surrogate Recovery	1
LD09018	F39TW08 (40-45)	SW8270	Hexachloroethane	<10.0	ug/l	R	Surrogate Recovery	1
LD09018	F39TW08 (40-45)	SW8270	4-Chlorophenyl Phenyl Ether	<10.0	ug/l	R	Surrogate Recovery	1
LD09018	F39TW08 (40-45)	SW8270	Hexachlorocyclopentadiene	<50.0	ug/l	R	Surrogate Recovery	1
LD09018	F39TW08 (40-45)	SW8270	3,5,5-Trimethyl-2-cyclohexene-1-one	<10.0	ug/l	R	Surrogate Recovery	1
LD09018	F39TW08 (40-45)	SW8270	Acenaphthene	<10.0	ug/l	R	Surrogate Recovery	1
LD09018	F39TW08 (40-45)	SW8270	Diethyl phthalate	<50.0	ug/l	R	Surrogate Recovery	1
LD09018	F39TW08 (40-45)	SW8270	Di-n-butyl phthalate	<50.0	ug/l	R	Surrogate Recovery	1
LD09018	F39TW08 (40-45)	SW8270	Phenanthrene	<10.0	ug/l	R	Surrogate Recovery	1
LD09018	F39TW08 (40-45)	SW8270	Benzyl Butyl Phthalate	<50.0	ug/l	R	Surrogate Recovery	1
LD09018	F39TW08 (40-45)	SW8270	N-Nitrosodiphenylamine	<10.0	ug/l	R	Surrogate Recovery	1
LD09018	F39TW08 (40-45)	SW8270	Carbazole	<10.0	ug/l	R	Surrogate Recovery	1
LD09018	F39TW08 (40-45)	SW8270	2-Nitroaniline	<20.0	ug/l	R	Surrogate Recovery	1

SDG	Sample ID	Method	Analyte	Result	Units	Qualifier	Reason	Dilution
LD09018	F39TW08 (40-45)	SW8270	Naphthalene	<10.0	ug/l	R	Surrogate Recovery	1
LD09018	F39TW08 (40-45)	SW8270	2-Methyl naphthalene	<10.0	ug/l	R	Surrogate Recovery	1
LD09018	F39TW08 (40-45)	SW8270	2-Chloronaphthalene	<10.0	ug/l	R	Surrogate Recovery	1
LD09018	F39TW08 (40-45)	SW8270	3,3'-Dichlorobenzidine	<50.0	ug/l	R	Surrogate Recovery	1
LD09018	F39TW08 (40-45)	SW8270	1,1'-Biphenyl	<10.0	ug/l	R	Surrogate Recovery	1
LD09018	F39TW08 (40-45)	SW8270	Acetophenone	<10.0	ug/l	R	Surrogate Recovery	1
LD09018	F39TW08 (40-45)	SW8270	Nitrobenzene	<10.0	ug/l	R	Surrogate Recovery	1
LD09018	F39TW08 (40-45)	SW8270	3-Nitroaniline	<20.0	ug/l	R	Surrogate Recovery	1
LD09018	F39TW08 (40-45)	SW8270	2,6-Dinitroluene	<20.0	ug/l	R	Surrogate Recovery	1
LD09018	F39TW08 (40-45)	SW8270	Pyrene	<10.0	ug/l	R	Surrogate Recovery	1
LD09018	F39TW08 (40-45)	SW8270	Fluorene	<10.0	ug/l	R	Surrogate Recovery	1
LD09018	F39TW08 (40-45)	SW8270	Anthracene	<10.0	ug/l	R	Surrogate Recovery	1
LD09018	F39TW08 (40-45)	SW8270	Dibenzofuran	<10.0	ug/l	R	Surrogate Recovery	1
LD09018	F39TW08 (40-45)	SW8270	4-Bromophenyl Phenyl Ether	<10.0	ug/l	R	Surrogate Recovery	1
LD09018	F39TW08 (40-45)	SW8270	Caprolactam	<50.0	ug/l	R	Surrogate Recovery	1

SDG	Sample ID	Method	Analyte	Result	Units	Qualifier	Reason	Dilution
LD09018	F39TW08 (40-45)	SW8270	p-Chloroaniline	<10.0	ug/l	R	Surrogate Recovery	1
LD09018	F39TW08 (40-45)	SW8270	bis(2-chloroisopropyl) ether	<10.0	ug/l	R	Surrogate Recovery	1
LD09018	F39TW08 (40-45)	SW8270	bis(2-Chloroethoxy) ether	<10.0	ug/l	R	Surrogate Recovery	1
LD09018	F39TW08 (40-45)	SW8270	bis(2-Chloroethoxy)methane	<10.0	ug/l	R	Surrogate Recovery	1
LD09018	F39TW08 (40-45)	SW8270	bis(2-Ethylhexyl)phthalate	<50.0	ug/l	R	Surrogate Recovery	1
LD09018	F39TW08 (40-45)	SW8270	Benzo(a)anthracene	<10.0	ug/l	R	Surrogate Recovery	1
LD09018	F39TW08 (40-45)	SW8270	Hexachlorobenzene	<10.0	ug/l	R	Surrogate Recovery	1
LD09018	F39TW08 (40-45)	SW8270	2,4-Dinitrotoluene	<20.0	ug/l	R	Surrogate Recovery	1
LD09018	F39TW08 (40-45)	SW8270	Benzaldehyde	<50.0	ug/l	R	Surrogate Recovery	1
LD09018	F39TW08 (40-45)	SW8270	Benzo(k)fluoranthene	<10.0	ug/l	R	Surrogate Recovery	1
LD09018	F39TW08 (40-45)	SW8270	Dibenzo(a,h)anthracene	<10.0	ug/l	R	Surrogate Recovery	1
LD09018	F39TW08 (40-45)	SW8270	Benzo(a)pyrene	<10.0	ug/l	R	Surrogate Recovery	1
LD09018	F39TW08 (40-45)	SW8270	Di-n-octyl phthalate	<50.0	ug/l	R	Surrogate Recovery	1
LD09018	F39TW08 (40-45)	SW8270	Acenaphthylene	<10.0	ug/l	R	Surrogate Recovery	1
LD09018	F39TW08 (40-45)	SW8270	Dimethyl Phthalate	<50.0	ug/l	R	Surrogate Recovery	1

SDG	Sample ID	Method	Analyte	Result	Units	Qualifier	Reason	Dilution
LD09018	F39TW08 (40-45)	SW8270	Fluoranthene	<10.0	ug/l	R	Surrogate Recovery	1
LD09018	F39TW08 (40-45)	SW8270	Benzo(b)fluoranthene	<10.0	ug/l	R	Surrogate Recovery	1
LD09018	F39TW08 (40-45)	SW8270	Indeno(1,2,3-cd)pyrene	<10.0	ug/l	R	Surrogate Recovery	1
LD09018	F39TW08 (40-45)	SW8270	Benzo(g,h,i)perylene	<10.0	ug/l	R	Surrogate Recovery	1
LD09018	F39TW08 (40-45)	SW8270	Atrazine	<10.0	ug/l	R	Surrogate Recovery	1
LD09018	F39TW08 (40-45)	SW8270	p-Nitroaniline	<20.0	ug/l	R	Surrogate Recovery	1
LD09018	F39TW08 (40-45)	SW8270	1,2-Benz-phenanthracene	<10.0	ug/l	R	Surrogate Recovery	1
LD09018	TRIP BLANK (040910)	SW8260	Bromomethane	<0.50	ug/l	UJ	LCS/LCSD RPD	1
LD14020	F39TW09 (10-15)	SW8260	Methylene Chloride	0.18	ug/l	UB	Blank Contamination	1
LD14020	F39TW09 (20-25)	SW8260	Methylene Chloride	0.21	ug/l	UB	Blank Contamination	1
LD14020	F39TW09 (30-35)	SW8260	trans-1,3-Dichloropropene	<0.50	ug/l	UJ	MS Recovery	1
LD14020	F39TW09 (30-35)	SW8260	Tribromomethane	<0.50	ug/l	UJ	MS/MSD Recovery	1
LD14020	F39TW09 (30-35)	SW8260	Carbon disulfide	0.37	ug/l	J	MS/MSD RPD	1
LD14020	F39TW09 (30-35)	SW8260	Acetone	7.5	ug/l	J	MS Recovery and MS/MSD RPD	1
LD14020	F39TW09 (30-35)	SW8260	Styrene	<0.50	ug/l	UJ	MS/MSD Recovery	1

SDG	Sample ID	Method	Analyte	Result	Units	Qualifier	Reason	Dilution
LD14020	F39TW09 (30-35)	SW8260	Methylene Chloride	<0.50	ug/l	UJ	MS/MSD RPD	1
LD14020	F39TW09 (30-35)	SW8260	Bromomethane	<0.50	ug/l	UJ	MS/MSD RPD	1
LD14020	F39TW09 (30-35)	SW8270	Carbazole	<1.0	ug/l	R	Surrogate Recovery	1
LD14020	F39TW09 (30-35)	SW8270	2,6-Dinitroluene	<2.0	ug/l	R	Surrogate Recovery	1
LD14020	F39TW09 (30-35)	SW8270	Hexachloroethane	<1.0	ug/l	R	Surrogate Recovery	1
LD14020	F39TW09 (30-35)	SW8270	4-Chlorophenyl Phenyl Ether	<1.0	ug/l	R	Surrogate Recovery	1
LD14020	F39TW09 (30-35)	SW8270	Hexachlorocyclopentadiene	<5.1	ug/l	R	Surrogate Recovery	1
LD14020	F39TW09 (30-35)	SW8270	3,5,5-Trimethyl-2-cyclohexene-1-one	<1.0	ug/l	R	Surrogate Recovery	1
LD14020	F39TW09 (30-35)	SW8270	Acenaphthene	<1.0	ug/l	R	Surrogate Recovery	1
LD14020	F39TW09 (30-35)	SW8270	Diethyl phthalate	<5.1	ug/l	R	Surrogate Recovery	1
LD14020	F39TW09 (30-35)	SW8270	Di-n-butyl phthalate	<5.1	ug/l	R	Surrogate Recovery	1
LD14020	F39TW09 (30-35)	SW8270	Phenanthrene	<1.0	ug/l	R	Surrogate Recovery	1
LD14020	F39TW09 (30-35)	SW8270	Benzyl Butyl Phthalate	<5.1	ug/l	R	Surrogate Recovery	1
LD14020	F39TW09 (30-35)	SW8270	Fluorene	<1.0	ug/l	R	Surrogate Recovery	1
LD14020	F39TW09 (30-35)	SW8270	Hexachloro-1,3-Butadiene	<1.0	ug/l	R	Surrogate Recovery	1

SDG	Sample ID	Method	Analyte	Result	Units	Qualifier	Reason	Dilution
LD14020	F39TW09 (30-35)	SW8270	2-Nitroaniline	<2.0	ug/l	R	Surrogate Recovery	1
LD14020	F39TW09 (30-35)	SW8270	Naphthalene	<1.0	ug/l	R	Surrogate Recovery	1
LD14020	F39TW09 (30-35)	SW8270	2-Methyl naphthalene	<1.0	ug/l	R	Surrogate Recovery	1
LD14020	F39TW09 (30-35)	SW8270	2-Chloronaphthalene	<1.0	ug/l	R	Surrogate Recovery	1
LD14020	F39TW09 (30-35)	SW8270	3,3'-Dichlorobenzidine	<5.1	ug/l	R	Surrogate Recovery	1
LD14020	F39TW09 (30-35)	SW8270	1,1'-Biphenyl	<1.0	ug/l	R	Surrogate Recovery	1
LD14020	F39TW09 (30-35)	SW8270	Acetophenone	<1.0	ug/l	R	Surrogate Recovery	1
LD14020	F39TW09 (30-35)	SW8270	Nitrobenzene	<1.0	ug/l	R	Surrogate Recovery	1
LD14020	F39TW09 (30-35)	SW8270	3-Nitroaniline	<2.0	ug/l	R	Surrogate Recovery	1
LD14020	F39TW09 (30-35)	SW8270	Benzo(a)anthracene	<1.0	ug/l	R	Surrogate Recovery	1
LD14020	F39TW09 (30-35)	SW8270	N-Nitrosodiphenylamine	<1.0	ug/l	R	Surrogate Recovery	1
LD14020	F39TW09 (30-35)	SW8270	4-Bromophenyl Phenyl Ether	<1.0	ug/l	R	Surrogate Recovery	1
LD14020	F39TW09 (30-35)	SW8270	N-Nitroso di-n-propylamine	<1.0	ug/l	R	Surrogate Recovery	1
LD14020	F39TW09 (30-35)	SW8270	Dibenzo(a,h)anthracene	<1.0	ug/l	R	Surrogate Recovery	1
LD14020	F39TW09 (30-35)	SW8270	Benzaldehyde	<5.1	ug/l	R	Surrogate Recovery	1

SDG	Sample ID	Method	Analyte	Result	Units	Qualifier	Reason	Dilution
LD14020	F39TW09 (30-35)	SW8270	Caprolactam	<5.1	ug/l	R	Surrogate Recovery	1
LD14020	F39TW09 (30-35)	SW8270	p-Chloroaniline	<1.0	ug/l	R	Surrogate Recovery	1
LD14020	F39TW09 (30-35)	SW8270	bis(2-chloroisopropyl) ether	<1.0	ug/l	R	Surrogate Recovery	1
LD14020	F39TW09 (30-35)	SW8270	bis(2-Chloroethoxy) ether	<1.0	ug/l	R	Surrogate Recovery	1
LD14020	F39TW09 (30-35)	SW8270	bis(2-Chloroethoxy)methane	<1.0	ug/l	R	Surrogate Recovery	1
LD14020	F39TW09 (30-35)	SW8270	bis(2-Ethylhexyl)phthalate	<5.1	ug/l	R	Surrogate Recovery	1
LD14020	F39TW09 (30-35)	SW8270	Di-n-octyl phthalate	<5.1	ug/l	R	Surrogate Recovery	1
LD14020	F39TW09 (30-35)	SW8270	Hexachlorobenzene	<1.0	ug/l	R	Surrogate Recovery	1
LD14020	F39TW09 (30-35)	SW8270	Anthracene	<1.0	ug/l	R	Surrogate Recovery	1
LD14020	F39TW09 (30-35)	SW8270	Benzo(b)fluoranthene	<1.0	ug/l	R	Surrogate Recovery	1
LD14020	F39TW09 (30-35)	SW8270	p-Nitroaniline	<2.0	ug/l	R	Surrogate Recovery	1
LD14020	F39TW09 (30-35)	SW8270	Acenaphthylene	<1.0	ug/l	R	Surrogate Recovery	1
LD14020	F39TW09 (30-35)	SW8270	Benzo(a)pyrene	<1.0	ug/l	R	Surrogate Recovery	1
LD14020	F39TW09 (30-35)	SW8270	2,4-Dinitrotoluene	<2.0	ug/l	R	Surrogate Recovery	1
LD14020	F39TW09 (30-35)	SW8270	Fluoranthene	<1.0	ug/l	R	Surrogate Recovery	1

SDG	Sample ID	Method	Analyte	Result	Units	Qualifier	Reason	Dilution
LD14020	F39TW09 (30-35)	SW8270	1,2-Benz-phenanthracene	<1.0	ug/l	R	Surrogate Recovery	1
LD14020	F39TW09 (30-35)	SW8270	Indeno(1,2,3-cd)pyrene	<1.0	ug/l	R	Surrogate Recovery	1
LD14020	F39TW09 (30-35)	SW8270	Benzo(g,h,i)perylene	<1.0	ug/l	R	Surrogate Recovery	1
LD14020	F39TW09 (30-35)	SW8270	Atrazine	<1.0	ug/l	R	Surrogate Recovery	1
LD14020	F39TW09 (30-35)	SW8270	Dibenzofuran	<1.0	ug/l	R	Surrogate Recovery	1
LD14020	F39TW09 (30-35)	SW8270	Dimethyl Phthalate	<5.1	ug/l	R	Surrogate Recovery	1
LD14020	F39TW09 (30-35)	SW8270	Pyrene	<1.0	ug/l	R	Surrogate Recovery	1
LD14020	F39TW09 (30-35)	SW8270	Benzo(k)fluoranthene	<1.0	ug/l	R	Surrogate Recovery	1
LD14020	F39TW09 (40-45)	SW8260	Methylene Chloride	0.24	ug/l	UB	Blank Contamination	1
LD14020	F39TW10 (10-15)	SW8260	Methylene Chloride	0.2	ug/l	UB	Blank Contamination	1
LD14020	F39TW10 (20-25)	SW8260	Methylene Chloride	0.23	ug/l	UB	Blank Contamination	1
LD14020	F39TW10 (30-35)	SW8260	Methylene Chloride	0.2	ug/l	UB	Blank Contamination	1
LD14020	F39TW10 (40-45)	SW8260	Methylene Chloride	0.23	ug/l	UB	Blank Contamination	1
LD14020	F39TW10 (40-45)	SW8270	3,5,5-Trimethyl-2-cyclohexene-1-one	<1.0	ug/l	UJ	Holding Time	1
LD14020	F39TW10 (40-45)	SW8270	Carbazole	<1.0	ug/l	UJ	Holding Time	1

SDG	Sample ID	Method	Analyte	Result	Units	Qualifier	Reason	Dilution
LD14020	F39TW10 (40-45)	SW8270	Fluorene	<1.0	ug/l	UJ	Holding Time	1
LD14020	F39TW10 (40-45)	SW8270	N-Nitrosodiphenylamine	<1.0	ug/l	UJ	Holding Time	1
LD14020	F39TW10 (40-45)	SW8270	Benzyl Butyl Phthalate	<5.1	ug/l	UJ	Holding Time	1
LD14020	F39TW10 (40-45)	SW8270	Phenanthrene	<1.0	ug/l	UJ	Holding Time	1
LD14020	F39TW10 (40-45)	SW8270	Di-n-butyl phthalate	<5.1	ug/l	UJ	Holding Time	1
LD14020	F39TW10 (40-45)	SW8270	Acenaphthene	<1.0	ug/l	UJ	Holding Time	1
LD14020	F39TW10 (40-45)	SW8270	Hexachlorocyclopentadiene	<5.1	ug/l	UJ	Holding Time	1
LD14020	F39TW10 (40-45)	SW8270	4-Chlorophenyl Phenyl Ether	<1.0	ug/l	UJ	Holding Time	1
LD14020	F39TW10 (40-45)	SW8270	Hexachloroethane	<1.0	ug/l	UJ	Holding Time	1
LD14020	F39TW10 (40-45)	SW8270	N-Nitroso di-n-propylamine	<1.0	ug/l	UJ	Holding Time	1
LD14020	F39TW10 (40-45)	SW8270	3-Nitroaniline	<2.0	ug/l	UJ	Holding Time	1
LD14020	F39TW10 (40-45)	SW8270	2,6-Dinitroluene	<2.0	ug/l	UJ	Holding Time	1
LD14020	F39TW10 (40-45)	SW8270	Hexachloro-1,3-Butadiene	<1.0	ug/l	UJ	Holding Time	1
LD14020	F39TW10 (40-45)	SW8270	Diethyl phthalate	<5.1	ug/l	UJ	Holding Time	1
LD14020	F39TW10 (40-45)	SW8270	3,3'-Dichlorobenzidine	<5.1	ug/l	UJ	Holding Time	1

SDG	Sample ID	Method	Analyte	Result	Units	Qualifier	Reason	Dilution
LD14020	F39TW10 (40-45)	SW8270	Nitrobenzene	<1.0	ug/l	UJ	Holding Time	1
LD14020	F39TW10 (40-45)	SW8270	2,4,5-Trichlorophenol	<1.0	ug/l	UJ	Holding Time	1
LD14020	F39TW10 (40-45)	SW8270	2-Chlorophenol	<1.0	ug/l	UJ	Holding Time	1
LD14020	F39TW10 (40-45)	SW8270	2-Methylphenol	<1.0	ug/l	UJ	Holding Time	1
LD14020	F39TW10 (40-45)	SW8270	m & p Cresol	<2.0	ug/l	UJ	Holding Time	1
LD14020	F39TW10 (40-45)	SW8270	Acetophenone	<1.0	ug/l	UJ	Holding Time	1
LD14020	F39TW10 (40-45)	SW8270	4-chloro-3-methylphenol	<1.0	ug/l	UJ	Holding Time	1
LD14020	F39TW10 (40-45)	SW8270	Pentachlorophenol	<5.1	ug/l	UJ	Holding Time	1
LD14020	F39TW10 (40-45)	SW8270	2-Chloronaphthalene	<1.0	ug/l	UJ	Holding Time	1
LD14020	F39TW10 (40-45)	SW8270	2-Methyl naphthalene	<1.0	ug/l	UJ	Holding Time	1
LD14020	F39TW10 (40-45)	SW8270	Naphthalene	<1.0	ug/l	UJ	Holding Time	1
LD14020	F39TW10 (40-45)	SW8270	2-Nitrophenol	<2.0	ug/l	UJ	Holding Time	1
LD14020	F39TW10 (40-45)	SW8270	2-Nitroaniline	<2.0	ug/l	UJ	Holding Time	1
LD14020	F39TW10 (40-45)	SW8270	2,4,6-Trichlorophenol	<1.0	ug/l	UJ	Holding Time	1
LD14020	F39TW10 (40-45)	SW8270	1,1'-Biphenyl	<1.0	ug/l	UJ	Holding Time	1

SDG	Sample ID	Method	Analyte	Result	Units	Qualifier	Reason	Dilution
LD14020	F39TW10 (40-45)	SW8270	p-Chloroaniline	<1.0	ug/l	UJ	Holding Time	1
LD14020	F39TW10 (40-45)	SW8270	Anthracene	<1.0	ug/l	UJ	Holding Time	1
LD14020	F39TW10 (40-45)	SW8270	Hexachlorobenzene	<1.0	ug/l	UJ	Holding Time	1
LD14020	F39TW10 (40-45)	SW8270	Di-n-octyl phthalate	<5.1	ug/l	UJ	Holding Time	1
LD14020	F39TW10 (40-45)	SW8270	bis(2-Ethylhexyl)phthalate	<5.1	ug/l	UJ	Holding Time	1
LD14020	F39TW10 (40-45)	SW8270	bis(2-Chloroethoxy)methane	<1.0	ug/l	UJ	Holding Time	1
LD14020	F39TW10 (40-45)	SW8270	2,4-Dichlorophenol	<1.0	ug/l	UJ	Holding Time	1
LD14020	F39TW10 (40-45)	SW8270	Phenol	<1.0	ug/l	UJ	Holding Time	1
LD14020	F39TW10 (40-45)	SW8270	Caprolactam	<5.1	ug/l	UJ	Holding Time	1
LD14020	F39TW10 (40-45)	SW8270	2,4-Dimethylphenol	<1.0	ug/l	UJ	Holding Time	1
LD14020	F39TW10 (40-45)	SW8270	4-Bromophenyl Phenyl Ether	<1.0	ug/l	UJ	Holding Time	1
LD14020	F39TW10 (40-45)	SW8270	4-Nitrophenol	<5.1	ug/l	UJ	Holding Time	1
LD14020	F39TW10 (40-45)	SW8270	p-Nitroaniline	<2.0	ug/l	UJ	Holding Time	1
LD14020	F39TW10 (40-45)	SW8270	bis(2-chloroisopropyl) ether	<1.0	ug/l	UJ	Holding Time	1
LD14020	F39TW10 (40-45)	SW8270	Benzo(a)anthracene	<1.0	ug/l	UJ	Holding Time	1

SDG	Sample ID	Method	Analyte	Result	Units	Qualifier	Reason	Dilution
LD14020	F39TW10 (40-45)	SW8270	bis(2-Chloroethoxy) ether	<1.0	ug/l	UJ	Holding Time	1
LD14020	F39TW10 (40-45)	SW8270	Benzo(k)fluoranthene	<1.0	ug/l	UJ	Holding Time	1
LD14020	F39TW10 (40-45)	SW8270	2,4-Dinitrophenol	<5.1	ug/l	UJ	Holding Time	1
LD14020	F39TW10 (40-45)	SW8270	Benzo(a)pyrene	<1.0	ug/l	UJ	Holding Time	1
LD14020	F39TW10 (40-45)	SW8270	Benzaldehyde	<5.1	ug/l	UJ	Holding Time	1
LD14020	F39TW10 (40-45)	SW8270	1,2-Benz-phenanthracene	<1.0	ug/l	UJ	Holding Time	1
LD14020	F39TW10 (40-45)	SW8270	2,4-Dinitrotoluene	<2.0	ug/l	UJ	Holding Time	1
LD14020	F39TW10 (40-45)	SW8270	Acenaphthylene	<1.0	ug/l	UJ	Holding Time	1
LD14020	F39TW10 (40-45)	SW8270	4,6-Dinitro-2-methylphenol	<5.1	ug/l	UJ	Holding Time	1
LD14020	F39TW10 (40-45)	SW8270	Fluoranthene	<1.0	ug/l	UJ	Holding Time	1
LD14020	F39TW10 (40-45)	SW8270	Benzo(b)fluoranthene	<1.0	ug/l	UJ	Holding Time	1
LD14020	F39TW10 (40-45)	SW8270	Indeno(1,2,3-cd)pyrene	<1.0	ug/l	UJ	Holding Time	1
LD14020	F39TW10 (40-45)	SW8270	Benzo(g,h,i)perylene	<1.0	ug/l	UJ	Holding Time	1
LD14020	F39TW10 (40-45)	SW8270	Atrazine	<1.0	ug/l	UJ	Holding Time	1
LD14020	F39TW10 (40-45)	SW8270	Dibenzofuran	<1.0	ug/l	UJ	Holding Time	1

SDG	Sample ID	Method	Analyte	Result	Units	Qualifier	Reason	Dilution
LD14020	F39TW10 (40-45)	SW8270	Dimethyl Phthalate	<5.1	ug/l	UJ	Holding Time	1
LD14020	F39TW10 (40-45)	SW8270	Pyrene	<1.0	ug/l	UJ	Holding Time	1
LD14020	F39TW10 (40-45)	SW8270	Dibenzo(a,h)anthracene	<1.0	ug/l	UJ	Holding Time	1
LD14020	F39TW11 (10-15)	SW8260	Acetone	6.7	ug/l	UB	Blank Contamination	1
LD14020	F39TW11 (10-15)	SW8260	Methylene Chloride	0.22	ug/l	UB	Blank Contamination	1
LD14020	F39TW11 (10-15)	SW8260	Carbon disulfide	0.34	ug/l	UB	Blank Contamination	1
LD14020	F39TW11 (20-25)	SW8260	Carbon disulfide	1.5	ug/l	UB	Blank Contamination	1
LD14020	F39TW11 (20-25)	SW8260	Methylene Chloride	0.2	ug/l	UB	Blank Contamination	1
LD14020	F39TW11 (20-25)	SW8270	2-Nitroaniline	<2.0	ug/l	UJ	MS/MSD Recovery	1
LD14020	F39TW11 (20-25)	SW8270	3,5,5-Trimethyl-2-cyclohexene-1-one	<1.0	ug/l	UJ	MS/MSD Recovery	1
LD14020	F39TW11 (20-25)	SW8270	Diethyl phthalate	<5.1	ug/l	UJ	MS/MSD Recovery	1
LD14020	F39TW11 (20-25)	SW8270	Di-n-butyl phthalate	<5.1	ug/l	UJ	MS/MSD Recovery	1
LD14020	F39TW11 (20-25)	SW8270	Phenanthrene	<1.0	ug/l	UJ	MS/MSD Recovery	1
LD14020	F39TW11 (20-25)	SW8270	Benzyl Butyl Phthalate	<5.1	ug/l	UJ	MS/MSD Recovery	1
LD14020	F39TW11 (20-25)	SW8270	N-Nitrosodiphenylamine	<1.0	ug/l	R	MS/MSD Recovery	1

SDG	Sample ID	Method	Analyte	Result	Units	Qualifier	Reason	Dilution
LD14020	F39TW11 (20-25)	SW8270	Fluorene	<1.0	ug/l	UJ	MS/MSD Recovery	1
LD14020	F39TW11 (20-25)	SW8270	Hexachloro-1,3-Butadiene	<1.0	ug/l	UJ	MS Recovery	1
LD14020	F39TW11 (20-25)	SW8270	Naphthalene	<1.0	ug/l	UJ	MS/MSD Recovery	1
LD14020	F39TW11 (20-25)	SW8270	2-Methyl naphthalene	<1.0	ug/l	UJ	MS/MSD Recovery	1
LD14020	F39TW11 (20-25)	SW8270	2-Chloronaphthalene	<1.0	ug/l	UJ	MSD Recovery and MS/MSD RPD	1
LD14020	F39TW11 (20-25)	SW8270	2,4,5-Trichlorophenol	<1.0	ug/l	UJ	MS/MSD Recovery	1
LD14020	F39TW11 (20-25)	SW8270	Nitrobenzene	<1.0	ug/l	UJ	MS/MSD Recovery	1
LD14020	F39TW11 (20-25)	SW8270	3-Nitroaniline	<2.0	ug/l	R	MS/MSD Recovery	1
LD14020	F39TW11 (20-25)	SW8270	2,6-Dinitroluene	<2.0	ug/l	UJ	MS/MSD Recovery	1
LD14020	F39TW11 (20-25)	SW8270	Hexachloroethane	<1.0	ug/l	UJ	MS/MSD Recovery	1
LD14020	F39TW11 (20-25)	SW8270	Carbazole	<1.0	ug/l	UJ	MS/MSD Recovery	1
LD14020	F39TW11 (20-25)	SW8270	Dibenzofuran	<1.0	ug/l	UJ	MS/MSD Recovery	1
LD14020	F39TW11 (20-25)	SW8270	4-Bromophenyl Phenyl Ether	<1.0	ug/l	UJ	MS/MSD Recovery	1
LD14020	F39TW11 (20-25)	SW8270	p-Chloroaniline	<1.0	ug/l	R	MS/MSD Recovery	1
LD14020	F39TW11 (20-25)	SW8270	bis(2-Chloroethoxy)methane	<1.0	ug/l	UJ	MS/MSD Recovery	1

SDG	Sample ID	Method	Analyte	Result	Units	Qualifier	Reason	Dilution
LD14020	F39TW11 (20-25)	SW8270	bis(2-Ethylhexyl)phthalate	<5.1	ug/l	R	MS Recovery	1
LD14020	F39TW11 (20-25)	SW8270	Di-n-octyl phthalate	<5.1	ug/l	UJ	MS/MSD Recovery	1
LD14020	F39TW11 (20-25)	SW8270	Hexachlorobenzene	<1.0	ug/l	UJ	MS/MSD Recovery	1
LD14020	F39TW11 (20-25)	SW8270	Anthracene	<1.0	ug/l	UJ	MS/MSD Recovery	1
LD14020	F39TW11 (20-25)	SW8270	2,4-Dinitrotoluene	<2.0	ug/l	UJ	MS/MSD Recovery	1
LD14020	F39TW11 (20-25)	SW8270	p-Nitroaniline	<2.0	ug/l	R	MS/MSD Recovery	1
LD14020	F39TW11 (20-25)	SW8270	Dimethyl Phthalate	<5.1	ug/l	UJ	MS/MSD Recovery	1
LD14020	F39TW11 (20-25)	SW8270	Benzo(g,h,i)perylene	<1.0	ug/l	UJ	MS/MSD Recovery	1
LD14020	F39TW11 (20-25)	SW8270	Indeno(1,2,3-cd)pyrene	<1.0	ug/l	UJ	MS/MSD Recovery	1
LD14020	F39TW11 (20-25)	SW8270	Fluoranthene	<1.0	ug/l	UJ	MS/MSD Recovery	1
LD14020	F39TW11 (20-25)	SW8270	1,2-Benz-phenanthracene	<1.0	ug/l	UJ	MS/MSD Recovery	1
LD14020	F39TW11 (20-25)	SW8270	Dibenzo(a,h)anthracene	<1.0	ug/l	UJ	MS/MSD Recovery	1
LD14020	F39TW11 (20-25)	SW8270	Benzo(a)anthracene	<1.0	ug/l	UJ	MS/MSD Recovery	1
LD14020	F39TW11 (20-25)	SW8270	4-Chlorophenyl Phenyl Ether	<1.0	ug/l	UJ	MS Recovery	1
LD14020	F39TW11 (20-25)	SW8270	4-chloro-3-methylphenol	<1.0	ug/l	UJ	MS/MSD Recovery	1

SDG	Sample ID	Method	Analyte	Result	Units	Qualifier	Reason	Dilution
LD14020	F39TW11 (20-25)	SW8270	Pyrene	<1.0	ug/l	UJ	MS/MSD Recovery	1
LD14020	F39TW11 (30-35)	SW8260	Acetone	2.9	ug/l	UB	Blank Contamination	1
LD14020	F39TW11 (30-35)	SW8260	Methylene Chloride	0.19	ug/l	UB	Blank Contamination	1
LD14020	F39TW11 (30-35)	SW8260	Carbon disulfide	0.46	ug/l	UB	Blank Contamination	1
LD14020	F39TW11 (40-45)	SW8260	Vinyl Chloride	0.6	ug/l	UB	Blank Contamination	1
LD14020	F39TW11 (40-45)	SW8260	Methylene Chloride	0.2	ug/l	UB	Blank Contamination	1
LD14020	F39TW11 (40-45)	SW8260	Carbon disulfide	0.4	ug/l	UB	Blank Contamination	1
LD14020	F39TW11 (40-45)	SW8270	2,6-Dinitroluene	<2.0	ug/l	UJ	Holding Time	1
LD14020	F39TW11 (40-45)	SW8270	Fluorene	<1.0	ug/l	UJ	Holding Time	1
LD14020	F39TW11 (40-45)	SW8270	N-Nitrosodiphenylamine	<1.0	ug/l	UJ	Holding Time	1
LD14020	F39TW11 (40-45)	SW8270	Benzyl Butyl Phthalate	<5.1	ug/l	UJ	Holding Time	1
LD14020	F39TW11 (40-45)	SW8270	Phenanthrene	<1.0	ug/l	UJ	Holding Time	1
LD14020	F39TW11 (40-45)	SW8270	Di-n-butyl phthalate	<5.1	ug/l	UJ	Holding Time	1
LD14020	F39TW11 (40-45)	SW8270	Diethyl phthalate	<5.1	ug/l	UJ	Holding Time	1
LD14020	F39TW11 (40-45)	SW8270	Acenaphthene	<1.0	ug/l	UJ	Holding Time	1

SDG	Sample ID	Method	Analyte	Result	Units	Qualifier	Reason	Dilution
LD14020	F39TW11 (40-45)	SW8270	Hexachlorocyclopentadiene	<5.1	ug/l	UJ	Holding Time	1
LD14020	F39TW11 (40-45)	SW8270	Carbazole	<1.0	ug/l	UJ	Holding Time	1
LD14020	F39TW11 (40-45)	SW8270	4-Chlorophenyl Phenyl Ether	<1.0	ug/l	UJ	Holding Time	1
LD14020	F39TW11 (40-45)	SW8270	Hexachloroethane	<1.0	ug/l	UJ	Holding Time	1
LD14020	F39TW11 (40-45)	SW8270	2,4,5-Trichlorophenol	<1.0	ug/l	UJ	Holding Time	1
LD14020	F39TW11 (40-45)	SW8270	N-Nitroso di-n-propylamine	<1.0	ug/l	UJ	Holding Time	1
LD14020	F39TW11 (40-45)	SW8270	3,5,5-Trimethyl-2-cyclohexene-1-one	<1.0	ug/l	UJ	Holding Time	1
LD14020	F39TW11 (40-45)	SW8270	2-Chloronaphthalene	<1.0	ug/l	UJ	Holding Time	1
LD14020	F39TW11 (40-45)	SW8270	4-chloro-3-methylphenol	<1.0	ug/l	UJ	Holding Time	1
LD14020	F39TW11 (40-45)	SW8270	3-Nitroaniline	<2.0	ug/l	UJ	Holding Time	1
LD14020	F39TW11 (40-45)	SW8270	Nitrobenzene	<1.0	ug/l	UJ	Holding Time	1
LD14020	F39TW11 (40-45)	SW8270	Acetophenone	<1.0	ug/l	UJ	Holding Time	1
LD14020	F39TW11 (40-45)	SW8270	1,2-Benz-phenanthracene	<1.0	ug/l	UJ	Holding Time	1
LD14020	F39TW11 (40-45)	SW8270	2-Chlorophenol	<1.0	ug/l	UJ	Holding Time	1
LD14020	F39TW11 (40-45)	SW8270	2-Methylphenol	<1.0	ug/l	UJ	Holding Time	1

SDG	Sample ID	Method	Analyte	Result	Units	Qualifier	Reason	Dilution
LD14020	F39TW11 (40-45)	SW8270	3,3'-Dichlorobenzidine	<5.1	ug/l	UJ	Holding Time	1
LD14020	F39TW11 (40-45)	SW8270	Hexachloro-1,3-Butadiene	<1.0	ug/l	UJ	Holding Time	1
LD14020	F39TW11 (40-45)	SW8270	2-Methyl naphthalene	<1.0	ug/l	UJ	Holding Time	1
LD14020	F39TW11 (40-45)	SW8270	Naphthalene	<1.0	ug/l	UJ	Holding Time	1
LD14020	F39TW11 (40-45)	SW8270	2-Nitrophenol	<2.0	ug/l	UJ	Holding Time	1
LD14020	F39TW11 (40-45)	SW8270	2-Nitroaniline	<2.0	ug/l	UJ	Holding Time	1
LD14020	F39TW11 (40-45)	SW8270	2,4,6-Trichlorophenol	<1.0	ug/l	UJ	Holding Time	1
LD14020	F39TW11 (40-45)	SW8270	Pentachlorophenol	<5.1	ug/l	UJ	Holding Time	1
LD14020	F39TW11 (40-45)	SW8270	1,1'-Biphenyl	<1.0	ug/l	UJ	Holding Time	1
LD14020	F39TW11 (40-45)	SW8270	2,4-Dimethylphenol	<1.0	ug/l	UJ	Holding Time	1
LD14020	F39TW11 (40-45)	SW8270	Benzo(a)anthracene	<1.0	ug/l	UJ	Holding Time	1
LD14020	F39TW11 (40-45)	SW8270	bis(2-Chloroethoxy)methane	<1.0	ug/l	UJ	Holding Time	1
LD14020	F39TW11 (40-45)	SW8270	bis(2-Chloroethoxy) ether	<1.0	ug/l	UJ	Holding Time	1
LD14020	F39TW11 (40-45)	SW8270	Phenol	<1.0	ug/l	UJ	Holding Time	1
LD14020	F39TW11 (40-45)	SW8270	bis(2-chloroisopropyl) ether	<1.0	ug/l	UJ	Holding Time	1

SDG	Sample ID	Method	Analyte	Result	Units	Qualifier	Reason	Dilution
LD14020	F39TW11 (40-45)	SW8270	Di-n-octyl phthalate	<5.1	ug/l	UJ	Holding Time	1
LD14020	F39TW11 (40-45)	SW8270	m & p Cresol	<2.0	ug/l	UJ	Holding Time	1
LD14020	F39TW11 (40-45)	SW8270	Hexachlorobenzene	<1.0	ug/l	UJ	Holding Time	1
LD14020	F39TW11 (40-45)	SW8270	Caprolactam	<5.1	ug/l	UJ	Holding Time	1
LD14020	F39TW11 (40-45)	SW8270	4-Bromophenyl Phenyl Ether	<1.0	ug/l	UJ	Holding Time	1
LD14020	F39TW11 (40-45)	SW8270	Benzaldehyde	<5.1	ug/l	UJ	Holding Time	1
LD14020	F39TW11 (40-45)	SW8270	4-Nitrophenol	<5.1	ug/l	UJ	Holding Time	1
LD14020	F39TW11 (40-45)	SW8270	p-Nitroaniline	<2.0	ug/l	UJ	Holding Time	1
LD14020	F39TW11 (40-45)	SW8270	2,4-Dinitrophenol	<5.1	ug/l	UJ	Holding Time	1
LD14020	F39TW11 (40-45)	SW8270	p-Chloroaniline	<1.0	ug/l	UJ	Holding Time	1
LD14020	F39TW11 (40-45)	SW8270	Indeno(1,2,3-cd)pyrene	<1.0	ug/l	UJ	Holding Time	1
LD14020	F39TW11 (40-45)	SW8270	Dibenzo(a,h)anthracene	<1.0	ug/l	UJ	Holding Time	1
LD14020	F39TW11 (40-45)	SW8270	4,6-Dinitro-2-methylphenol	<5.1	ug/l	UJ	Holding Time	1
LD14020	F39TW11 (40-45)	SW8270	Benzo(a)pyrene	<1.0	ug/l	UJ	Holding Time	1
LD14020	F39TW11 (40-45)	SW8270	Acenaphthylene	<1.0	ug/l	UJ	Holding Time	1

SDG	Sample ID	Method	Analyte	Result	Units	Qualifier	Reason	Dilution
LD14020	F39TW11 (40-45)	SW8270	Benzo(k)fluoranthene	<1.0	ug/l	UJ	Holding Time	1
LD14020	F39TW11 (40-45)	SW8270	bis(2-Ethylhexyl)phthalate	<5.1	ug/l	UJ	Holding Time	1
LD14020	F39TW11 (40-45)	SW8270	Benzo(b)fluoranthene	<1.0	ug/l	UJ	Holding Time	1
LD14020	F39TW11 (40-45)	SW8270	Anthracene	<1.0	ug/l	UJ	Holding Time	1
LD14020	F39TW11 (40-45)	SW8270	Benzo(g,h,i)perylene	<1.0	ug/l	UJ	Holding Time	1
LD14020	F39TW11 (40-45)	SW8270	Atrazine	<1.0	ug/l	UJ	Holding Time	1
LD14020	F39TW11 (40-45)	SW8270	Dibenzofuran	<1.0	ug/l	UJ	Holding Time	1
LD14020	F39TW11 (40-45)	SW8270	Dimethyl Phthalate	<5.1	ug/l	UJ	Holding Time	1
LD14020	F39TW11 (40-45)	SW8270	Pyrene	<1.0	ug/l	UJ	Holding Time	1
LD14020	F39TW11 (40-45)	SW8270	2,4-Dinitrotoluene	<2.0	ug/l	UJ	Holding Time	1
LD14020	F39TW11 (40-45)	SW8270	2,4-Dichlorophenol	<1.0	ug/l	UJ	Holding Time	1
LD14020	F39TW11 (40-45)	SW8270	Fluoranthene	<1.0	ug/l	UJ	Holding Time	1
LD14020	F39TW12 (10-15)	SW8260	Acetone	3.6	ug/l	UB	Blank Contamination	1
LD14020	F39TW12 (10-15)	SW8260	Carbon disulfide	0.24	ug/l	UB	Blank Contamination	1
LD14020	F39TW12 (20-25)	SW8260	Acetone	4.8	ug/l	UB	Blank Contamination	1

SDG	Sample ID	Method	Analyte	Result	Units	Qualifier	Reason	Dilution
LD14020	F39TW12 (20-25)	SW8260	Carbon disulfide	0.45	ug/l	UB	Blank Contamination	1
LD14020	F39TW12 (30-35)	SW8260	Acetone	3.5	ug/l	UB	Blank Contamination	1
LD14020	F39TW12 (30-35)	SW8260	Carbon disulfide	0.19	ug/l	UB	Blank Contamination	1
LD14020	F39TW12 (40-45)	SW8260	Acetone	7.2	ug/l	UB	Blank Contamination	1
LD14020	F39TW12 (40-45)	SW8260	Carbon disulfide	0.19	ug/l	UB	Blank Contamination	1
LD14020	F39TW12 (40-45)	SW8270	Acenaphthene	<1.0	ug/l	R	Surrogate Recovery	1
LD14020	F39TW12 (40-45)	SW8270	Hexachloro-1,3-Butadiene	<1.0	ug/l	R	Surrogate Recovery	1
LD14020	F39TW12 (40-45)	SW8270	Carbazole	<1.0	ug/l	R	Surrogate Recovery	1
LD14020	F39TW12 (40-45)	SW8270	Fluorene	<1.0	ug/l	R	Surrogate Recovery	1
LD14020	F39TW12 (40-45)	SW8270	N-Nitrosodiphenylamine	<1.0	ug/l	R	Surrogate Recovery	1
LD14020	F39TW12 (40-45)	SW8270	Benzyl Butyl Phthalate	<5.1	ug/l	R	Surrogate Recovery	1
LD14020	F39TW12 (40-45)	SW8270	Phenanthrene	<1.0	ug/l	R	Surrogate Recovery	1
LD14020	F39TW12 (40-45)	SW8270	Diethyl phthalate	<5.1	ug/l	R	Surrogate Recovery	1
LD14020	F39TW12 (40-45)	SW8270	bis(2-Ethylhexyl)phthalate	<5.1	ug/l	R	Surrogate Recovery	1
LD14020	F39TW12 (40-45)	SW8270	3,5,5-Trimethyl-2-cyclohexene-1-one	<1.0	ug/l	R	Surrogate Recovery	1

SDG	Sample ID	Method	Analyte	Result	Units	Qualifier	Reason	Dilution
LD14020	F39TW12 (40-45)	SW8270	Hexachlorocyclopentadiene	<5.1	ug/l	R	Surrogate Recovery	1
LD14020	F39TW12 (40-45)	SW8270	4-Chlorophenyl Phenyl Ether	<1.0	ug/l	R	Surrogate Recovery	1
LD14020	F39TW12 (40-45)	SW8270	Hexachloroethane	<1.0	ug/l	R	Surrogate Recovery	1
LD14020	F39TW12 (40-45)	SW8270	N-Nitroso di-n-propylamine	<1.0	ug/l	R	Surrogate Recovery	1
LD14020	F39TW12 (40-45)	SW8270	2,6-Dinitroluene	<2.0	ug/l	R	Surrogate Recovery	1
LD14020	F39TW12 (40-45)	SW8270	Di-n-butyl phthalate	<5.1	ug/l	R	Surrogate Recovery	1
LD14020	F39TW12 (40-45)	SW8270	3,3'-Dichlorobenzidine	<5.1	ug/l	R	Surrogate Recovery	1
LD14020	F39TW12 (40-45)	SW8270	3-Nitroaniline	<2.0	ug/l	R	Surrogate Recovery	1
LD14020	F39TW12 (40-45)	SW8270	Nitrobenzene	<1.0	ug/l	R	Surrogate Recovery	1
LD14020	F39TW12 (40-45)	SW8270	Acetophenone	<1.0	ug/l	R	Surrogate Recovery	1
LD14020	F39TW12 (40-45)	SW8270	2,4,5-Trichlorophenol	<1.0	ug/l	UJ	Holding Time	1
LD14020	F39TW12 (40-45)	SW8270	2-Chlorophenol	<1.0	ug/l	UJ	Holding Time	1
LD14020	F39TW12 (40-45)	SW8270	Pentachlorophenol	<5.1	ug/l	UJ	Holding Time	1
LD14020	F39TW12 (40-45)	SW8270	1,1'-Biphenyl	<1.0	ug/l	R	Surrogate Recovery	1
LD14020	F39TW12 (40-45)	SW8270	2,4,6-Trichlorophenol	<1.0	ug/l	UJ	Holding Time	1

SDG	Sample ID	Method	Analyte	Result	Units	Qualifier	Reason	Dilution
LD14020	F39TW12 (40-45)	SW8270	2-Chloronaphthalene	<1.0	ug/l	R	Surrogate Recovery	1
LD14020	F39TW12 (40-45)	SW8270	2-Methyl naphthalene	<1.0	ug/l	R	Surrogate Recovery	1
LD14020	F39TW12 (40-45)	SW8270	Naphthalene	<1.0	ug/l	R	Surrogate Recovery	1
LD14020	F39TW12 (40-45)	SW8270	2-Nitrophenol	<2.0	ug/l	UJ	Holding Time	1
LD14020	F39TW12 (40-45)	SW8270	2-Nitroaniline	<2.0	ug/l	R	Surrogate Recovery	1
LD14020	F39TW12 (40-45)	SW8270	4-chloro-3-methylphenol	<1.0	ug/l	UJ	Holding Time	1
LD14020	F39TW12 (40-45)	SW8270	2-Methylphenol	<1.0	ug/l	UJ	Holding Time	1
LD14020	F39TW12 (40-45)	SW8270	m & p Cresol	<2.0	ug/l	UJ	Holding Time	1
LD14020	F39TW12 (40-45)	SW8270	Anthracene	<1.0	ug/l	R	Surrogate Recovery	1
LD14020	F39TW12 (40-45)	SW8270	Di-n-octyl phthalate	<5.1	ug/l	R	Surrogate Recovery	1
LD14020	F39TW12 (40-45)	SW8270	bis(2-Chloroethoxy)methane	<1.0	ug/l	R	Surrogate Recovery	1
LD14020	F39TW12 (40-45)	SW8270	bis(2-Chloroethoxy) ether	<1.0	ug/l	R	Surrogate Recovery	1
LD14020	F39TW12 (40-45)	SW8270	Phenol	<1.0	ug/l	UJ	Holding Time	1
LD14020	F39TW12 (40-45)	SW8270	Hexachlorobenzene	<1.0	ug/l	R	Surrogate Recovery	1
LD14020	F39TW12 (40-45)	SW8270	p-Chloroaniline	<1.0	ug/l	R	Surrogate Recovery	1

SDG	Sample ID	Method	Analyte	Result	Units	Qualifier	Reason	Dilution
LD14020	F39TW12 (40-45)	SW8270	Pyrene	<1.0	ug/l	R	Surrogate Recovery	1
LD14020	F39TW12 (40-45)	SW8270	2,4-Dimethylphenol	<1.0	ug/l	UJ	Holding Time	1
LD14020	F39TW12 (40-45)	SW8270	Caprolactam	<5.1	ug/l	R	Surrogate Recovery	1
LD14020	F39TW12 (40-45)	SW8270	4-Bromophenyl Phenyl Ether	<1.0	ug/l	R	Surrogate Recovery	1
LD14020	F39TW12 (40-45)	SW8270	Benzaldehyde	<5.1	ug/l	R	Surrogate Recovery	1
LD14020	F39TW12 (40-45)	SW8270	4-Nitrophenol	<5.1	ug/l	UJ	Holding Time	1
LD14020	F39TW12 (40-45)	SW8270	p-Nitroaniline	<2.0	ug/l	R	Surrogate Recovery	1
LD14020	F39TW12 (40-45)	SW8270	bis(2-chloroisopropyl) ether	<1.0	ug/l	R	Surrogate Recovery	1
LD14020	F39TW12 (40-45)	SW8270	Benzo(b)fluoranthene	<1.0	ug/l	R	Surrogate Recovery	1
LD14020	F39TW12 (40-45)	SW8270	Dibenzo(a,h)anthracene	<1.0	ug/l	R	Surrogate Recovery	1
LD14020	F39TW12 (40-45)	SW8270	4,6-Dinitro-2-methylphenol	<5.1	ug/l	UJ	Holding Time	1
LD14020	F39TW12 (40-45)	SW8270	2,4-Dinitrophenol	<5.1	ug/l	UJ	Holding Time	1
LD14020	F39TW12 (40-45)	SW8270	Benzo(a)pyrene	<1.0	ug/l	R	Surrogate Recovery	1
LD14020	F39TW12 (40-45)	SW8270	1,2-Benz-phenanthracene	<1.0	ug/l	R	Surrogate Recovery	1
LD14020	F39TW12 (40-45)	SW8270	Acenaphthylene	<1.0	ug/l	R	Surrogate Recovery	1

SDG	Sample ID	Method	Analyte	Result	Units	Qualifier	Reason	Dilution
LD14020	F39TW12 (40-45)	SW8270	2,4-Dichlorophenol	<1.0	ug/l	UJ	Holding Time	1
LD14020	F39TW12 (40-45)	SW8270	Fluoranthene	<1.0	ug/l	R	Surrogate Recovery	1
LD14020	F39TW12 (40-45)	SW8270	2,4-Dinitrotoluene	<2.0	ug/l	R	Surrogate Recovery	1
LD14020	F39TW12 (40-45)	SW8270	Indeno(1,2,3-cd)pyrene	<1.0	ug/l	R	Surrogate Recovery	1
LD14020	F39TW12 (40-45)	SW8270	Benzo(g,h,i)perylene	<1.0	ug/l	R	Surrogate Recovery	1
LD14020	F39TW12 (40-45)	SW8270	Atrazine	<1.0	ug/l	R	Surrogate Recovery	1
LD14020	F39TW12 (40-45)	SW8270	Dibenzofuran	<1.0	ug/l	R	Surrogate Recovery	1
LD14020	F39TW12 (40-45)	SW8270	Dimethyl Phthalate	<5.1	ug/l	R	Surrogate Recovery	1
LD14020	F39TW12 (40-45)	SW8270	Benzo(a)anthracene	<1.0	ug/l	R	Surrogate Recovery	1
LD14020	F39TW12 (40-45)	SW8270	Benzo(k)fluoranthene	<1.0	ug/l	R	Surrogate Recovery	1

SDG	Sample ID	Method	Analyte	Result	Units	RDL	Qualifier	Reason	Dilution
ME10010	G4MW-048(050611)	SW6010	Selenium	0.0077	mg/l	0	UB	Blank Contamination	1
ME10010	G4MW-048(050611)	SW6010	Selenium	0.0088	mg/l	0	UB	Blank Contamination	1
ME10010	G4MW-048(050611)	SW8270	N-Nitrosodiphenylamine		ug/l	1	R	Surrogate Recovery	1
ME10010	G4MW-048(050611)	SW8270	2,6-Dinitroluene		ug/l	2	R	Surrogate Recovery	1
ME10010	G4MW-048(050611)	SW8270	N-Nitroso di-n-propylamine		ug/l	1	R	Surrogate Recovery	1
ME10010	G4MW-048(050611)	SW8270	Hexachloroethane		ug/l	1	R	Surrogate Recovery	1
ME10010	G4MW-048(050611)	SW8270	4-Chlorophenyl Phenyl Ether		ug/l	1	R	Surrogate Recovery	1
ME10010	G4MW-048(050611)	SW8270	Hexachlorocyclopentadiene		ug/l	5	R	Surrogate Recovery	1
ME10010	G4MW-048(050611)	SW8270	3,5,5-Trimethyl-2-cyclohexene-1-one		ug/l	1	R	Surrogate Recovery	1
ME10010	G4MW-048(050611)	SW8270	Acenaphthene		ug/l	1	R	Surrogate Recovery	1
ME10010	G4MW-048(050611)	SW8270	Diethyl phthalate		ug/l	5	R	Surrogate Recovery	1
ME10010	G4MW-048(050611)	SW8270	Di-n-butyl phthalate		ug/l	5	R	Surrogate Recovery	1
ME10010	G4MW-048(050611)	SW8270	3-Nitroaniline		ug/l	2	R	Surrogate Recovery	1
ME10010	G4MW-048(050611)	SW8270	Benzyl Butyl Phthalate		ug/l	5	R	Surrogate Recovery	1
ME10010	G4MW-048(050611)	SW8270	Benzo(a)pyrene		ug/l	1	R	Surrogate Recovery	1

SDG	Sample ID	Method	Analyte	Result	Units	RDL	Qualifier	Reason	Dilution
ME10010	G4MW-048(050611)	SW8270	Fluorene		ug/l	1	R	Surrogate Recovery	1
ME10010	G4MW-048(050611)	SW8270	Carbazole		ug/l	1	R	Surrogate Recovery	1
ME10010	G4MW-048(050611)	SW8270	Hexachloro-1,3-Butadiene		ug/l	1	R	Surrogate Recovery	1
ME10010	G4MW-048(050611)	SW8270	2-Nitroaniline		ug/l	2	R	Surrogate Recovery	1
ME10010	G4MW-048(050611)	SW8270	2-Methyl naphthalene		ug/l	1	R	Surrogate Recovery	1
ME10010	G4MW-048(050611)	SW8270	3,3'-Dichlorobenzidine		ug/l	5	R	Surrogate Recovery	1
ME10010	G4MW-048(050611)	SW8270	Nitrobenzene		ug/l	1	R	Surrogate Recovery	1
ME10010	G4MW-048(050611)	SW8270	Phenanthrene		ug/l	1	R	Surrogate Recovery	1
ME10010	G4MW-048(050611)	SW8270	Dimethyl Phthalate		ug/l	5	R	Surrogate Recovery	1
ME10010	G4MW-048(050611)	SW8270	p-Nitroaniline		ug/l	2	R	Surrogate Recovery	1
ME10010	G4MW-048(050611)	SW8270	4-Bromophenyl Phenyl Ether		ug/l	1	R	Surrogate Recovery	1
ME10010	G4MW-048(050611)	SW8270	p-Chloroaniline		ug/l	1	R	Surrogate Recovery	1
ME10010	G4MW-048(050611)	SW8270	bis(2-chloroisopropyl) ether		ug/l	1	R	Surrogate Recovery	1
ME10010	G4MW-048(050611)	SW8270	bis(2-Chloroethoxy)methane		ug/l	1	R	Surrogate Recovery	1
ME10010	G4MW-048(050611)	SW8270	bis(2-Ethylhexyl)phthalate		ug/l	5	R	Surrogate Recovery	1

SDG	Sample ID	Method	Analyte	Result	Units	RDL	Qualifier	Reason	Dilution
ME10010	G4MW-048(050611)	SW8270	Di-n-octyl phthalate		ug/l	5	R	Surrogate Recovery	1
ME10010	G4MW-048(050611)	SW8270	Hexachlorobenzene		ug/l	1	R	Surrogate Recovery	1
ME10010	G4MW-048(050611)	SW8270	Anthracene		ug/l	1	R	Surrogate Recovery	1
ME10010	G4MW-048(050611)	SW8270	Benzo(a)anthracene		ug/l	1	R	Surrogate Recovery	1
ME10010	G4MW-048(050611)	SW8270	Pyrene		ug/l	1	R	Surrogate Recovery	1
ME10010	G4MW-048(050611)	SW8270	Dibenzo(a,h)anthracene		ug/l	1	R	Surrogate Recovery	1
ME10010	G4MW-048(050611)	SW8270	Dibenzofuran		ug/l	1	R	Surrogate Recovery	1
ME10010	G4MW-048(050611)	SW8270	Benzo(g,h,i)perylene		ug/l	1	R	Surrogate Recovery	1
ME10010	G4MW-048(050611)	SW8270	Indeno(1,2,3-cd)pyrene		ug/l	1	R	Surrogate Recovery	1
ME10010	G4MW-048(050611)	SW8270	Benzo(b)fluoranthene		ug/l	1	R	Surrogate Recovery	1
ME10010	G4MW-048(050611)	SW8270	Fluoranthene		ug/l	1	R	Surrogate Recovery	1
ME10010	G4MW-048(050611)	SW8270	Benzo(k)fluoranthene		ug/l	1	R	Surrogate Recovery	1
ME10010	G4MW-048(050611)	SW8270	Acenaphthylene		ug/l	1	R	Surrogate Recovery	1
ME10010	G4MW-048(050611)	SW8270	1,2-Benz-phenanthracene		ug/l	1	R	Surrogate Recovery	1
ME10010	G4MW-048(050611)	SW8270	2-Chloronaphthalene		ug/l	1	R	Surrogate Recovery	1

SDG	Sample ID	Method	Analyte	Result	Units	RDL	Qualifier	Reason	Dilution
ME10010	G4MW-048(050611)	SW8270	2,4-Dinitrotoluene		ug/l	2	R	Surrogate Recovery	1
ME10010	G4MW-048(050611)	SW8270	Naphthalene		ug/l	1	R	Surrogate Recovery	1
ME10010	G4MW-049(050411)	SW6010	Selenium	0.0047	mg/l	0	UB	Blank Contamination	1
ME10010	G4MW-049(050411)	SW6010	Selenium	0.0027	mg/l	0	UB	Blank Contamination	1
ME10010	G4MW-050(050611)	SW6010	Selenium	0.0065	mg/l	0	UB	Blank Contamination	1
ME10010	G4MW-050(050611)	SW6010	Selenium	0.0073	mg/l	0	UB	Blank Contamination	1
ME10010	G4MW-051(050611)	SW6010	Selenium	0.0042	mg/l	0	UB	Blank Contamination	1
ME10010	G4MW-051(050611)	SW6010	Selenium	0.0097	mg/l	0	UB	Blank Contamination	1
ME10010	G4MW-052(050611)	SW6010	Selenium	0.012	mg/l	0	UB	Blank Contamination	1
ME10010	G4MW-052(050611)	SW8270	Diethyl phthalate		ug/l	5.1	R	Surrogate Recovery	1
ME10010	G4MW-052(050611)	SW8270	Carbazole		ug/l	1	R	Surrogate Recovery	1
ME10010	G4MW-052(050611)	SW8270	Fluorene		ug/l	1	R	Surrogate Recovery	1
ME10010	G4MW-052(050611)	SW8270	N-Nitrosodiphenylamine		ug/l	1	R	Surrogate Recovery	1
ME10010	G4MW-052(050611)	SW8270	Benzyl Butyl Phthalate		ug/l	5.1	R	Surrogate Recovery	1
ME10010	G4MW-052(050611)	SW8270	Hexachloro-1,3-Butadiene		ug/l	1	R	Surrogate Recovery	1

SDG	Sample ID	Method	Analyte	Result	Units	RDL	Qualifier	Reason	Dilution
ME10010	G4MW-052(050611)	SW8270	Di-n-butyl phthalate		ug/l	5.1	R	Surrogate Recovery	1
ME10010	G4MW-052(050611)	SW8270	2-Nitroaniline		ug/l	2	R	Surrogate Recovery	1
ME10010	G4MW-052(050611)	SW8270	Acenaphthene		ug/l	1	R	Surrogate Recovery	1
ME10010	G4MW-052(050611)	SW8270	3,5,5-Trimethyl-2-cyclohexene-1-one		ug/l	1	R	Surrogate Recovery	1
ME10010	G4MW-052(050611)	SW8270	Hexachlorocyclopentadiene		ug/l	5.1	R	Surrogate Recovery	1
ME10010	G4MW-052(050611)	SW8270	4-Chlorophenyl Phenyl Ether		ug/l	1	R	Surrogate Recovery	1
ME10010	G4MW-052(050611)	SW8270	Phenanthrene		ug/l	1	R	Surrogate Recovery	1
ME10010	G4MW-052(050611)	SW8270	p-Nitroaniline		ug/l	2	R	Surrogate Recovery	1
ME10010	G4MW-052(050611)	SW8270	2,4,6-Trichlorophenol		ug/l	1	UJ	Holding Time	1
ME10010	G4MW-052(050611)	SW8270	2-Nitrophenol		ug/l	2	UJ	Holding Time	1
ME10010	G4MW-052(050611)	SW8270	Naphthalene		ug/l	1	R	Surrogate Recovery	1
ME10010	G4MW-052(050611)	SW8270	2-Methyl naphthalene		ug/l	1	R	Surrogate Recovery	1
ME10010	G4MW-052(050611)	SW8270	2-Chloronaphthalene		ug/l	1	R	Surrogate Recovery	1
ME10010	G4MW-052(050611)	SW8270	3,3'-Dichlorobenzidine		ug/l	5.1	R	Surrogate Recovery	1
ME10010	G4MW-052(050611)	SW8270	2-Methylphenol		ug/l	1	UJ	Holding Time	1

SDG	Sample ID	Method	Analyte	Result	Units	RDL	Qualifier	Reason	Dilution
ME10010	G4MW-052(050611)	SW8270	2-Chlorophenol		ug/l	1	UJ	Holding Time	1
ME10010	G4MW-052(050611)	SW8270	2,4,5-Trichlorophenol		ug/l	1	UJ	Holding Time	1
ME10010	G4MW-052(050611)	SW8270	Nitrobenzene		ug/l	1	R	Surrogate Recovery	1
ME10010	G4MW-052(050611)	SW8270	3-Nitroaniline		ug/l	2	R	Surrogate Recovery	1
ME10010	G4MW-052(050611)	SW8270	Hexachloroethane		ug/l	1	R	Surrogate Recovery	1
ME10010	G4MW-052(050611)	SW8270	N-Nitroso di-n-propylamine		ug/l	1	R	Surrogate Recovery	1
ME10010	G4MW-052(050611)	SW8270	Pentachlorophenol		ug/l	5.1	UJ	Holding Time	1
ME10010	G4MW-052(050611)	SW8270	Fluoranthene		ug/l	1	R	Surrogate Recovery	1
ME10010	G4MW-052(050611)	SW8270	2,6-Dinitroluene		ug/l	2	R	Surrogate Recovery	1
ME10010	G4MW-052(050611)	SW8270	Pyrene		ug/l	1	R	Surrogate Recovery	1
ME10010	G4MW-052(050611)	SW8270	Dimethyl Phthalate		ug/l	5.1	R	Surrogate Recovery	1
ME10010	G4MW-052(050611)	SW8270	Dibenzofuran		ug/l	1	R	Surrogate Recovery	1
ME10010	G4MW-052(050611)	SW8270	Benzo(g,h,i)perylene		ug/l	1	R	Surrogate Recovery	1
ME10010	G4MW-052(050611)	SW8270	2,4-Dichlorophenol		ug/l	1	UJ	Holding Time	1
ME10010	G4MW-052(050611)	SW8270	Benzo(b)fluoranthene		ug/l	1	R	Surrogate Recovery	1

SDG	Sample ID	Method	Analyte	Result	Units	RDL	Qualifier	Reason	Dilution
ME10010	G4MW-052(050611)	SW8270	Anthracene		ug/l	1	R	Surrogate Recovery	1
ME10010	G4MW-052(050611)	SW8270	Benzo(k)fluoranthene		ug/l	1	R	Surrogate Recovery	1
ME10010	G4MW-052(050611)	SW8270	Acenaphthylene		ug/l	1	R	Surrogate Recovery	1
ME10010	G4MW-052(050611)	SW8270	1,2-Benz-phenanthracene		ug/l	1	R	Surrogate Recovery	1
ME10010	G4MW-052(050611)	SW8270	Benzo(a)pyrene		ug/l	1	R	Surrogate Recovery	1
ME10010	G4MW-052(050611)	SW8270	2,4-Dinitrophenol		ug/l	5.1	UJ	Holding Time	1
ME10010	G4MW-052(050611)	SW8270	4,6-Dinitro-2-methylphenol		ug/l	5.1	UJ	Holding Time	1
ME10010	G4MW-052(050611)	SW8270	Indeno(1,2,3-cd)pyrene		ug/l	1	R	Surrogate Recovery	1
ME10010	G4MW-052(050611)	SW8270	p-Chloroaniline		ug/l	1	R	Surrogate Recovery	1
ME10010	G4MW-052(050611)	SW8270	Dibenzo(a,h)anthracene		ug/l	1	R	Surrogate Recovery	1
ME10010	G4MW-052(050611)	SW8270	Benzo(a)anthracene		ug/l	1	R	Surrogate Recovery	1
ME10010	G4MW-052(050611)	SW8270	4-Nitrophenol		ug/l	5.1	UJ	Holding Time	1
ME10010	G4MW-052(050611)	SW8270	4-Bromophenyl Phenyl Ether		ug/l	1	R	Surrogate Recovery	1
ME10010	G4MW-052(050611)	SW8270	2,4-Dinitrotoluene		ug/l	2	R	Surrogate Recovery	1
ME10010	G4MW-052(050611)	SW8270	m & p Cresol		ug/l	2	UJ	Holding Time	1

SDG	Sample ID	Method	Analyte	Result	Units	RDL	Qualifier	Reason	Dilution
ME10010	G4MW-052(050611)	SW8270	4-chloro-3-methylphenol		ug/l	1	UJ	Holding Time	1
ME10010	G4MW-052(050611)	SW8270	bis(2-chloroisopropyl) ether	0.34	ug/l	1	J	Holding Time	1
ME10010	G4MW-052(050611)	SW8270	Phenol		ug/l	1	UJ	Holding Time	1
ME10010	G4MW-052(050611)	SW8270	bis(2-Chloroethoxy)methane		ug/l	1	R	Surrogate Recovery	1
ME10010	G4MW-052(050611)	SW8270	bis(2-Ethylhexyl)phthalate		ug/l	5.1	R	Surrogate Recovery	1
ME10010	G4MW-052(050611)	SW8270	Di-n-octyl phthalate		ug/l	5.1	R	Surrogate Recovery	1
ME10010	G4MW-052(050611)	SW8270	Hexachlorobenzene		ug/l	1	R	Surrogate Recovery	1
ME10010	G4MW-052(050611)	SW8270	2,4-Dimethylphenol		ug/l	1	UJ	Holding Time	1
ME10010	G4MW-053(050611)	SW6010	Selenium	0.017	mg/l	0	UB	Blank Contamination	1
ME10010	G4MW-053(050611)	SW6010	Selenium	0.0073	mg/l	0	UB	Blank Contamination	1
ME10010	G4MW-053(050611)	SW8270	Diethyl phthalate		ug/l	5.2	R	Surrogate Recovery	1
ME10010	G4MW-053(050611)	SW8270	2,6-Dinitroluene		ug/l	2.1	R	Surrogate Recovery	1
ME10010	G4MW-053(050611)	SW8270	N-Nitroso di-n-propylamine		ug/l	1	R	Surrogate Recovery	1
ME10010	G4MW-053(050611)	SW8270	Hexachloroethane		ug/l	1	R	Surrogate Recovery	1
ME10010	G4MW-053(050611)	SW8270	4-Chlorophenyl Phenyl Ether		ug/l	1	R	Surrogate Recovery	1

SDG	Sample ID	Method	Analyte	Result	Units	RDL	Qualifier	Reason	Dilution
ME10010	G4MW-053(050611)	SW8270	Hexachlorocyclopentadiene		ug/l	5.2	R	Surrogate Recovery	1
ME10010	G4MW-053(050611)	SW8270	Carbazole		ug/l	1	R	Surrogate Recovery	1
ME10010	G4MW-053(050611)	SW8270	Acenaphthene		ug/l	1	R	Surrogate Recovery	1
ME10010	G4MW-053(050611)	SW8270	Dibenzo(a,h)anthracene		ug/l	1	R	Surrogate Recovery	1
ME10010	G4MW-053(050611)	SW8270	Di-n-butyl phthalate		ug/l	5.2	R	Surrogate Recovery	1
ME10010	G4MW-053(050611)	SW8270	Phenanthrene		ug/l	1	R	Surrogate Recovery	1
ME10010	G4MW-053(050611)	SW8270	Benzyl Butyl Phthalate		ug/l	5.2	R	Surrogate Recovery	1
ME10010	G4MW-053(050611)	SW8270	N-Nitrosodiphenylamine		ug/l	1	R	Surrogate Recovery	1
ME10010	G4MW-053(050611)	SW8270	p-Nitroaniline		ug/l	2.1	R	Surrogate Recovery	1
ME10010	G4MW-053(050611)	SW8270	3,5,5-Trimethyl-2-cyclohexene-1-one		ug/l	1	R	Surrogate Recovery	1
ME10010	G4MW-053(050611)	SW8270	Benzo(a)anthracene		ug/l	1	R	Surrogate Recovery	1
ME10010	G4MW-053(050611)	SW8270	Hexachloro-1,3-Butadiene		ug/l	1	R	Surrogate Recovery	1
ME10010	G4MW-053(050611)	SW8270	4,6-Dinitro-2-methylphenol		ug/l	5.2	UJ	Holding Time	1
ME10010	G4MW-053(050611)	SW8270	2,4-Dinitrophenol		ug/l	5.2	UJ	Holding Time	1
ME10010	G4MW-053(050611)	SW8270	Benzo(a)pyrene		ug/l	1	R	Surrogate Recovery	1

SDG	Sample ID	Method	Analyte	Result	Units	RDL	Qualifier	Reason	Dilution
ME10010	G4MW-053(050611)	SW8270	1,2-Benz-phenanthracene		ug/l	1	R	Surrogate Recovery	1
ME10010	G4MW-053(050611)	SW8270	Acenaphthylene		ug/l	1	R	Surrogate Recovery	1
ME10010	G4MW-053(050611)	SW8270	Benzo(k)fluoranthene		ug/l	1	R	Surrogate Recovery	1
ME10010	G4MW-053(050611)	SW8270	Fluoranthene		ug/l	1	R	Surrogate Recovery	1
ME10010	G4MW-053(050611)	SW8270	Benzo(b)fluoranthene		ug/l	1	R	Surrogate Recovery	1
ME10010	G4MW-053(050611)	SW8270	Indeno(1,2,3-cd)pyrene		ug/l	1	R	Surrogate Recovery	1
ME10010	G4MW-053(050611)	SW8270	4-Nitrophenol		ug/l	5.2	UJ	Holding Time	1
ME10010	G4MW-053(050611)	SW8270	Benzo(g,h,i)perylene		ug/l	1	R	Surrogate Recovery	1
ME10010	G4MW-053(050611)	SW8270	Dibenzofuran		ug/l	1	R	Surrogate Recovery	1
ME10010	G4MW-053(050611)	SW8270	4-chloro-3-methylphenol		ug/l	1	UJ	Holding Time	1
ME10010	G4MW-053(050611)	SW8270	3-Nitroaniline		ug/l	2.1	R	Surrogate Recovery	1
ME10010	G4MW-053(050611)	SW8270	p-Chloroaniline		ug/l	1	R	Surrogate Recovery	1
ME10010	G4MW-053(050611)	SW8270	bis(2-chloroisopropyl) ether	0.13	ug/l	1	J	Holding Time	1
ME10010	G4MW-053(050611)	SW8270	Phenol		ug/l	1	UJ	Holding Time	1
ME10010	G4MW-053(050611)	SW8270	bis(2-Chloroethoxy)methane		ug/l	1	R	Surrogate Recovery	1

SDG	Sample ID	Method	Analyte	Result	Units	RDL	Qualifier	Reason	Dilution
ME10010	G4MW-053(050611)	SW8270	bis(2-Ethylhexyl)phthalate		ug/l	5.2	R	Surrogate Recovery	1
ME10010	G4MW-053(050611)	SW8270	Di-n-octyl phthalate		ug/l	5.2	R	Surrogate Recovery	1
ME10010	G4MW-053(050611)	SW8270	Hexachlorobenzene		ug/l	1	R	Surrogate Recovery	1
ME10010	G4MW-053(050611)	SW8270	Anthracene		ug/l	1	R	Surrogate Recovery	1
ME10010	G4MW-053(050611)	SW8270	2,4-Dichlorophenol		ug/l	1	UJ	Holding Time	1
ME10010	G4MW-053(050611)	SW8270	2,4-Dinitrotoluene		ug/l	2.1	R	Surrogate Recovery	1
ME10010	G4MW-053(050611)	SW8270	Pyrene		ug/l	1	R	Surrogate Recovery	1
ME10010	G4MW-053(050611)	SW8270	Fluorene		ug/l	1	R	Surrogate Recovery	1
ME10010	G4MW-053(050611)	SW8270	m & p Cresol		ug/l	2.1	UJ	Holding Time	1
ME10010	G4MW-053(050611)	SW8270	4-Bromophenyl Phenyl Ether		ug/l	1	R	Surrogate Recovery	1
ME10010	G4MW-053(050611)	SW8270	Dimethyl Phthalate		ug/l	5.2	R	Surrogate Recovery	1
ME10010	G4MW-053(050611)	SW8270	Nitrobenzene		ug/l	1	R	Surrogate Recovery	1
ME10010	G4MW-053(050611)	SW8270	2,4,5-Trichlorophenol		ug/l	1	UJ	Holding Time	1
ME10010	G4MW-053(050611)	SW8270	2-Chlorophenol		ug/l	1	UJ	Holding Time	1
ME10010	G4MW-053(050611)	SW8270	2-Methylphenol		ug/l	1	UJ	Holding Time	1

SDG	Sample ID	Method	Analyte	Result	Units	RDL	Qualifier	Reason	Dilution
ME10010	G4MW-053(050611)	SW8270	3,3'-Dichlorobenzidine		ug/l	5.2	R	Surrogate Recovery	1
ME10010	G4MW-053(050611)	SW8270	2-Chloronaphthalene		ug/l	1	R	Surrogate Recovery	1
ME10010	G4MW-053(050611)	SW8270	2-Methyl naphthalene		ug/l	1	R	Surrogate Recovery	1
ME10010	G4MW-053(050611)	SW8270	Naphthalene		ug/l	1	R	Surrogate Recovery	1
ME10010	G4MW-053(050611)	SW8270	2-Nitrophenol		ug/l	2.1	UJ	Holding Time	1
ME10010	G4MW-053(050611)	SW8270	2-Nitroaniline		ug/l	2.1	R	Surrogate Recovery	1
ME10010	G4MW-053(050611)	SW8270	2,4,6-Trichlorophenol		ug/l	1	UJ	Holding Time	1
ME10010	G4MW-053(050611)	SW8270	Pentachlorophenol		ug/l	5.2	UJ	Holding Time	1
ME10010	G4MW-053(050611)	SW8270	2,4-Dimethylphenol		ug/l	1	UJ	Holding Time	1
ME10010	G4MW-054(050611)	SW6010	Selenium	0.0043	mg/l	0	UB	Blank Contamination	1
ME10010	G4MW-054(050611)	SW6010	Selenium	0.017	mg/l	0	UB	Blank Contamination	1

HUNTER STEWART
ELECTRONIC VALIDATION REVIEW REPORT
SDG: MG16005
FST-39

Analytical data were evaluated in accordance with applicable USEPA SW-846 method requirements, "USEPA Contract Laboratory Program National Functional Guidelines for Organic Data Review" (October 1999), analytical method control criteria, the analytical laboratory Quality Assurance Control Limits, the Fort Stewart Military Reservation and Hunter Army Airfield Quality Assurance Project Plan (ARCADIS-2008), and professional judgment.

The data review summarized in this report includes a review of all sample collection documentation and the electronic data validation of the analytical data housed in the project database. Sample collection documentation included sample collection logs and chains of custody. The electronic data validation was performed utilizing the EQuIS Data Qualification Module (DQM). DQM checks for the following parameters:

- Holding times and preservation;
- Blank contamination;
    1. Method blanks,
    2. Trip blanks,
    3. Equipment blanks;
- Matrix spike and Duplicate sample recovery;
- Matrix Spike and Matrix Spike Duplicate relative percent differences;
- Laboratory Control Sample and Duplicate recovery;
- Laboratory Control Sample and Duplicate relative percent differences;
- Surrogate recovery (organic analyses only); and
- Field duplicate relative percent difference.

Manual review was performed for the following items:

- Sample dilutions and reporting limits;
- Case Narratives; and
- Laboratory Duplicates

Data was generated by Shealy Environmental Services, Inc. – West Columbia, South Carolina. Data qualifiers were applied electronically to the database with any additional qualifiers added manually. A summary of the data as amended by data qualifiers is included with the original hard copy reports.

The attached table summarizes the data that were qualified due to QC deficiencies. The table indicates compounds/analytes qualified based on electronic and manual validation. Refer to the associated method section of the validation checklist for a detailed explanation of qualification. All other data in these SDGs are considered usable as reported.

HUNTER STEWART
ELECTRONIC VALIDATION REVIEW REPORT
SDG: MG16005
FST-39

The following list of data qualifiers and definitions were applied in accordance with qualification criteria defined in the greater than guidance documents:

UB Compound/analyte detected in blank or associated blank, qualified as a non-detect at listed value.

J The analyte was positively identified, but the associated numerical value is the approximate concentration of the analyte in the sample.

UJ The analyte was not detected greater than the reporting limit; however, the reported quantitation limit is approximate and may, or may not represent the actual limit of quantitation necessary to accurately and precisely measure analyte in the sample.

R The sample result is rejected due to serious deficiencies in the ability to analyze the sample and meet quality control criteria; and the presence or absence of the analyte cannot be verified.

U Not detected at the quantitative reporting limit

DQM RUN BY:	Rachelle Borne	10/31/11
REVIEW PERFORMED BY:	Rachelle Borne	10/31/11
SIGNATURE:	Rachelle Borne	10/31/11
PEER REVIEW:	Todd Church	11/3/11

HUNTER STEWART
ELECTRONIC VALIDATION REVIEW REPORT
SDG: MG16005
FST-39

The following samples were included in this validation:

SDG	Sample ID	Sample Date	Parent Sample
MG16005	G4MW-052	07/12/11	
MG16005	Trip Blank	07/12/11	

HUNTER STEWART
ELECTRONIC VALIDATION REVIEW REPORT
SDG: MG16005
FST-39

ANALYTICAL DATA PACKAGE DOCUMENTATION

GENERAL INFORMATION

Items Reviewed	Reported		Performance Acceptable		Not Required
	No	Yes	No	Yes	
1. Sample results		X		X	
2. Parameters analyzed		X		X	
3. Methods of analysis		X		X	
4. Reporting limits of analysis		X		X	
5. Master tracking list		X		X	
6. Sample collection date		X		X	
7. Laboratory sample received date		X		X	
8. Sample preparation/extraction date		X		X	
9. Sample analysis date		X		X	
10. Copy of chain-of-custody form signed by lab sample custodian		X		X	
11. Narrative summary of QA or sample problems provided		X		X	
12. Laboratory Signature		X		X	
13. South Carolina Certification Number		X		X	

QA - quality assurance

The analytical report was complete with the following exceptions or notations.

Note: The laboratory reported values between the quantitative reporting limit and the method detection limit as estimated concentrations. The "J" qualifier was retained in this validation. Non-detect values are reported at the quantitative reporting limit.

HUNTER STEWART
ELECTRONIC VALIDATION REVIEW REPORT
SDG: MG16005
FST-39

VOLATILE ORGANIC COMPOUNDS

Items Reviewed	DQM Deficiency		Qualification Applied	
	No	Yes	No	Yes
1. Holding times/Preservation	DQM		DQM	
2. Reporting limits	M		M	
3. Blanks				
A. Method blanks	DQM		DQM	
B. Equipment blanks	NA		NA	
C. Trip blanks		DQM	DQM	
4. Surrogate spike recoveries	DQM		DQM	
5. Laboratory control sample (LCS) A. LCS %R	DQM		DQM	
B. LCS duplicate (LCSD) %R	DQM		DQM	
C. LCS/LCSD RPD	DQM		DQM	
6. Matrix spike (MS)				
A. MS %R	NA		NA	
B. MS duplicate (MSD) %R	NA		NA	
C. MS/MSD precision (RPD)	NA		NA	
7. Field Duplicate precision (RPD)	NA		NA	

M – Manual Review %R - percent recovery RPD - relative percent difference
DQM – Data Qualification Module

Comments:
This section presents a discussion of any additions or changes to the electronic data validation for compounds analyzed by Method 8260B.

3C. The compound toluene was detected in the trip blank. The associated field samples were non-detect for this compound; therefore, qualification of the data was not warranted.

HUNTER STEWART
ELECTRONIC VALIDATION REVIEW REPORT
SDGs: ME10010 and ME20017
FST-39

Analytical data were evaluated in accordance with applicable USEPA SW-846 method requirements, "USEPA Contract Laboratory Program National Functional Guidelines for Organic Data Review" (October 1999), "USEPA Contract Laboratory Program National Functional Guidelines for Inorganic Data Review" (July 2002), analytical method control criteria, the analytical laboratory Quality Assurance Control Limits, the Fort Stewart Military Reservation and Hunter Army Airfield Quality Assurance Project Plan (ARCADIS-2008), and professional judgment.

The data review summarized in this report includes a review of all sample collection documentation and the electronic data validation of the analytical data housed in the project database. Sample collection documentation included sample collection logs and chains of custody. The electronic data validation was performed utilizing the EQuIS Data Qualification Module (DQM). DQM checks for the following parameters:

- Holding times and preservation;
- Blank contamination;
    1. Method blanks,
    2. Trip blanks,
    3. Equipment blanks;
- Matrix spike and Duplicate sample recovery;
- Matrix Spike and Matrix Spike Duplicate relative percent differences;
- Laboratory Control Sample and Duplicate recovery;
- Laboratory Control Sample and Duplicate relative percent differences;
- Surrogate recovery (organic analyses only); and
- Field duplicate relative percent difference.

Manual review was performed for the following items:

- Sample dilutions and reporting limits;
- Case Narratives; and
- Laboratory Duplicates

Data was generated by Shealy Environmental Services, Inc. – West Columbia, South Carolina. Data qualifiers were applied electronically to the database with any additional qualifiers added manually. A summary of the data as amended by data qualifiers is included with the original hard copy reports.

The attached table summarizes the data that were qualified due to QC deficiencies. The table indicates compounds/analytes qualified based on electronic and manual validation. Refer to the associated method section of the validation checklist for a detailed explanation of qualification. All other data in these SDGs are considered usable as reported.

HUNTER STEWART
ELECTRONIC VALIDATION REVIEW REPORT
SDGs: ME10010 and ME20017
FST-39

The following list of data qualifiers and definitions were applied in accordance with qualification criteria defined in the greater than guidance documents:

UB Compound/analyte detected in blank or associated blank, qualified as a non-detect at listed value.

J The analyte was positively identified, but the associated numerical value is the approximate concentration of the analyte in the sample.

UJ The analyte was not detected greater than the reporting limit; however, the reported quantitation limit is approximate and may, or may not represent the actual limit of quantitation necessary to accurately and precisely measure analyte in the sample.

R The sample result is rejected due to serious deficiencies in the ability to analyze the sample and meet quality control criteria; and the presence or absence of the analyte cannot be verified.

U Not detected at the quantitative reporting limit

DQM RUN BY:	Rachelle Borne	07/13/11
REVIEW PERFORMED BY:	Rachelle Borne	07/13/11
SIGNATURE:	Rachelle Borne	07/14/11
PEER REVIEW:	Dennis Capria	07/14/11

HUNTER STEWART
ELECTRONIC VALIDATION REVIEW REPORT
SDGs: ME10010 and ME20017
FST-39

The following samples were included in this validation:

SDG	Sample ID	Sample Date	Parent Sample
ME10010	G4MW-048(050611)	05/06/11	
ME10010	G4MW-049(050611)	05/06/11	
ME10010	G4MW-050(050611)	05/06/11	
ME10010	G4MW-051(050611)	05/06/11	
ME10010	G4MW-052(050611)	05/06/11	
ME10010	G4MW-053(050611)	05/06/11	
ME10010	G4MW-054(050611)	05/06/11	
ME10010	Trip Blank(050611)	05/06/11	
ME20017	F39SB015(0-0.5)	05/19/11	
ME20017	F39SB015(3-3.5)	05/19/11	
ME20017	F39SB016(0-0.5)	05/19/11	
ME20017	F39SB016(3-3.5)	05/19/11	
ME20017	F39SB017(0-0.5)	05/19/11	
ME20017	F39SB017(3-3.5)	05/19/11	

HUNTER STEWART
ELECTRONIC VALIDATION REVIEW REPORT
SDGs: ME10010 and ME20017
FST-39

ANALYTICAL DATA PACKAGE DOCUMENTATION

GENERAL INFORMATION

Items Reviewed	Reported		Performance Acceptable		Not Required
	No	Yes	No	Yes	
1. Sample results		X		X	
2. Parameters analyzed		X		X	
3. Methods of analysis		X		X	
4. Reporting limits of analysis		X		X	
5. Master tracking list		X		X	
6. Sample collection date		X		X	
7. Laboratory sample received date		X		X	
8. Sample preparation/extraction date		X		X	
9. Sample analysis date		X		X	
10. Copy of chain-of-custody form signed by lab sample custodian		X		X	
11. Narrative summary of QA or sample problems provided		X		X	
12. Laboratory Signature		X		X	
13. South Carolina Certification Number		X		X	

QA - quality assurance

The analytical report was complete with the following exceptions or notations.

Note: The laboratory reported values between the quantitative reporting limit and the method detection limit as estimated concentrations. The "J" qualifier was retained in this validation. Non-detect values are reported at the quantitative reporting limit.

HUNTER STEWART
ELECTRONIC VALIDATION REVIEW REPORT
SDGs: ME10010 and ME20017
FST-39

VOLATILE ORGANIC COMPOUNDS

Items Reviewed	DQM Deficiency		Qualification Applied	
	No	Yes	No	Yes
1. Holding times/Preservation	DQM		DQM	
2. Reporting limits	M		M	
3. Blanks				
A. Method blanks	DQM		DQM	
B. Equipment blanks	NA		NA	
C. Trip blanks	DQM		DQM	
4. Surrogate spike recoveries	DQM		DQM	
5. Laboratory control sample (LCS) A. LCS %R	DQM		DQM	
B. LCS duplicate (LCSD) %R	DQM		DQM	
C. LCS/LCSD RPD	DQM		DQM	
6. Matrix spike (MS)				
A. MS %R	NA		NA	
B. MS duplicate (MSD) %R	NA		NA	
C. MS/MSD precision (RPD)	NA		NA	
7. Field Duplicate precision (RPD)	NA		NA	

M – Manual Review %R - percent recovery RPD - relative percent difference
DQM – Data Qualification Module

Comments:
This section presents a discussion of any additions or changes to the electronic data validation for compounds analyzed by Method 8260B.

HUNTER STEWART
ELECTRONIC VALIDATION REVIEW REPORT
SDGs: ME10010 and ME20017
FST-39

SEMIVOLATILE ORGANIC COMPOUNDS

Items Reviewed	DQM Deficiency		Qualification Applied	
	No	Yes	No	Yes
1. Holding times/Preservation		DQM		DQM
2. Reporting limits	M		M	
3. Blanks				
A. Method blanks		DQM		DQM
B. Equipment blanks	NA		NA	
4. Surrogate spike recoveries		DQM		DQM
5. Laboratory control sample (LCS) A. LCS %R		DQM		DQM
B. LCS duplicate (LCSD) %R	NA		NA	
C. LCS/LCSD RPD	NA		NA	
6. Matrix spike (MS)				
A. MS %R		DQM		DQM
B. MS duplicate (MSD) %R		DQM		DQM
C. MS/MSD precision (RPD)		DQM		DQM
7. Field Duplicate precision (RPD)	NA		NA	

M – Manual Review %R - percent recovery RPD - relative percent difference
DQM – Data Qualification Module

Comments:
This section presents a discussion of any additions or changes to the electronic data validation for compounds analyzed by Method 8270D.

1. SDG (ME10010) Sample locations G4MW-052(050611) and G4MW-053(050611) were initially analyzed within the acceptable seven day holding time; however, one base neutral surrogate recovery was less than ten percent. The samples were re-analyzed 6 days beyond the seven day recommended holding time with similar results. All results were qualified as estimated for these two samples.

3A. SDG (ME20017) The compound 4-chloroaniline was detected in the method blank. The associated field samples were qualified as non-detect for this compound if the sample concentrations were less than five times the blank value.

4. SDG (ME10010) One base neutral surrogate recovery was less than 10% in sample locations G4MW-048(050611), G4MW-052(050611), G4MW-053(050611). All detected base neutral compounds were qualified as estimated and all non-detect base neutral results were qualified as rejected.

5A. SDG (ME20017) The recovery of hexachloroethane was below the control limit in the LCS. The recoveries of hexachlorobutadiene, hexachlorocylcopentadiene and hexachloroethane were below the control limit in the LCS for batch 60960. The associated field samples were qualified as estimated for these compounds.

6. SDG (ME10010) Sample location G4MW-048(050611) was used as the MS/MSD. Several recoveries and RPDs were outside the control limit for the base neutral compounds. The parent sample was already qualified as rejected for all base neutral compounds. Further qualification of the data is not warranted.

SDG (ME20017) Sample location F39SB015(0-0.5) was used as the MS/MSD. The recovery of 2,4-dinitrophenol was below the control limit in the MS. The RPD for this compound was above the control limit. The parent sample was qualified as estimated for 2,4-dinitrophenol.

SDG (ME20017) Sample location F39SB017(0-0.5) was used as the MS/MSD. The recoveries of 4,6-dinitro-2-methylphenol and Hexachlorocyclopentadiene were below the control limit in the MS. The parent sample was qualified as estimated for these compounds. The recovery of 2,4-dinitrophenol was less than ten percent in the MS. The parent sample was qualified as rejected for this compound. The RPDs for 2,4-dinitrophenol, 4,6-dinitro-2-methylphenol and Hexachlorocyclopentadiene. The parent sample was qualified as estimated for these compounds.

HUNTER STEWART
ELECTRONIC VALIDATION REVIEW REPORT
SDGs: ME10010 and ME20017
FST-39

METALS

Items Reviewed	DQM Deficiency		Qualification Applied	
	No	Yes	No	Yes
1. Holding times/Preservation	DQM		DQM	
2. Reporting limits	M		M	
3. Blanks				
A. Method blanks		DQM		DQM
B. Equipment blanks	NA		NA	
4. Laboratory control sample (LCS) A. LCS %R	DQM		DQM	
B. LCS duplicate (LCSD) %R	DQM		DQM	
C. LCS/LCSD RPD	DQM		DQM	
5. Matrix spike (MS)				
A. MS %R	DQM		DQM	
B. MS duplicate (MSD) %R	DQM		DQM	
C. MS/MSD precision (RPD)	DQM		DQM	
6. Field Duplicate precision (RPD)	NA		NA	
7. Total vs. Dissolved	M		M	

M – Manual Review %R - percent recovery RPD - relative percent difference
DQM – Data Qualification Module

Comments:

This section presents a discussion of any additions or changes to the electronic data validation for compounds analyzed by Methods 6010C and 7470A.

3A. SDG (ME10010) Arsenic and selenium were detected in the method blank. The associated field samples were qualified as non-detect for these metals if the sample concentrations were less than five times the blank values.

5. SDG (ME10010) Sample locations G4MW-053(050611) and G4MW-054(050611) were used as MS/MSDs for mercury. The recoveries and RPDs were acceptable.

Hunter Stewart
FST-39-5

SDG	Sample ID	Method	Analyte	Results	Units	Qualifier	Reason	Dilution
MD28024	G4MW053(0.5-1.0)	SW8270	2,4-Dinitrophenol	<340.0	ug/kg	UJ	MS/MSD RPD	1
MD28024	G4MW053(0.5-1.0)	SW8270	2-Chloronaphthalene	<69.0	ug/kg	UJ	MS/MSD RPD	1

HUNTER STEWART
ELECTRONIC VALIDATION REVIEW REPORT
SDG: MD28024
FST-39

Analytical data were evaluated in accordance with applicable USEPA SW-846 method requirements, "USEPA Contract Laboratory Program National Functional Guidelines for Organic Data Review" (October 1999), "USEPA Contract Laboratory Program National Functional Guidelines for Inorganic Data Review" (July 2002), analytical method control criteria, the analytical laboratory Quality Assurance Control Limits, the Fort Stewart Military Reservation and Hunter Army Airfield Quality Assurance Project Plan (ARCADIS-2008), and professional judgment.

The data review summarized in this report includes a review of all sample collection documentation and the electronic data validation of the analytical data housed in the project database. Sample collection documentation included sample collection logs and chains of custody. The electronic data validation was performed utilizing the EQuIS Data Qualification Module (DQM). DQM checks for the following parameters:

- Holding times and preservation;
- Blank contamination;
    1. Method blanks,
    2. Trip blanks,
    3. Equipment blanks;
- Matrix spike and Duplicate sample recovery;
- Matrix Spike and Matrix Spike Duplicate relative percent differences;
- Laboratory Control Sample and Duplicate recovery;
- Laboratory Control Sample and Duplicate relative percent differences;
- Surrogate recovery (organic analyses only); and
- Field duplicate relative percent difference.

Manual review was performed for the following items:

- Sample dilutions and reporting limits;
- Case Narratives; and
- Laboratory Duplicates

Data was generated by Shealy Environmental Services, Inc. – West Columbia, South Carolina. Data qualifiers were applied electronically to the database with any additional qualifiers added manually. A summary of the data as amended by data qualifiers is included with the original hard copy reports.

The attached table summarizes the data that were qualified due to QC deficiencies. The table indicates compounds/analytes qualified based on electronic and manual validation. Refer to the associated method section of the validation checklist for a detailed explanation of qualification. All other data in these SDGs are considered usable as reported.

HUNTER STEWART
ELECTRONIC VALIDATION REVIEW REPORT
SDG: MD28024
FST-39

The following list of data qualifiers and definitions were applied in accordance with qualification criteria defined in the greater than guidance documents:

UB Compound/analyte detected in blank or associated blank, qualified as a non-detect at listed value.

J The analyte was positively identified, but the associated numerical value is the approximate concentration of the analyte in the sample.

UJ The analyte was not detected greater than the reporting limit; however, the reported quantitation limit is approximate and may, or may not represent the actual limit of quantitation necessary to accurately and precisely measure analyte in the sample.

R The sample result is rejected due to serious deficiencies in the ability to analyze the sample and meet quality control criteria; and the presence or absence of the analyte cannot be verified.

U Not detected at the quantitative reporting limit

DQM RUN BY:	Rachelle Borne	06/23/11
REVIEW PERFORMED BY:	Rachelle Borne	06/24/11
SIGNATURE:	Rachelle Borne	06/24/11
PEER REVIEW:	Todd Church	6/24/11

HUNTER STEWART
ELECTRONIC VALIDATION REVIEW REPORT
SDG: MD28024
FST-39

The following samples were included in this validation:

SDG	Sample ID	Sample Date	Parent Sample
MD28024	G4MW053(0.5-1.0)	04/27/11	
MD28024	G4MW053(3.0-3.5)	04/27/11	
MD28024	F39-SB-013(0.5-1.0)	04/27/11	
MD28024	F39-SB-013(3.0-3.5)	04/27/11	
MD28024	F39-SB-014(0.5-1.0)	04/27/11	
MD28024	F39-SB-014(3.0-3.5)	04/27/11	

HUNTER STEWART
ELECTRONIC VALIDATION REVIEW REPORT
SDG: MD28024
FST-39

ANALYTICAL DATA PACKAGE DOCUMENTATION

GENERAL INFORMATION

Items Reviewed	Reported		Performance Acceptable		Not Required
	No	Yes	No	Yes	
1. Sample results		X		X	
2. Parameters analyzed		X		X	
3. Methods of analysis		X		X	
4. Reporting limits of analysis		X		X	
5. Master tracking list		X		X	
6. Sample collection date		X		X	
7. Laboratory sample received date		X		X	
8. Sample preparation/extraction date		X		X	
9. Sample analysis date		X		X	
10. Copy of chain-of-custody form signed by lab sample custodian		X		X	
11. Narrative summary of QA or sample problems provided		X		X	
12. Laboratory Signature		X		X	
13. South Carolina Certification Number		X		X	

QA - quality assurance

The analytical report was complete with the following exceptions or notations.

Note: The laboratory reported values between the quantitative reporting limit and the method detection limit as estimated concentrations. The "J" qualifier was retained in this validation. Non-detect values are reported at the quantitative reporting limit.

HUNTER STEWART
ELECTRONIC VALIDATION REVIEW REPORT
SDG: MD28024
FST-39

SEMIVOLATILE ORGANIC COMPOUNDS

Items Reviewed	DQM Deficiency		Qualification Applied	
	No	Yes	No	Yes
1. Holding times/Preservation	DQM		DQM	
2. Reporting limits	M		M	
3. Blanks				
A. Method blanks	DQM		DQM	
B. Equipment blanks	NA		NA	
4. Surrogate spike recoveries	DQM		DQM	
5. Laboratory control sample (LCS) A. LCS %R	DQM		DQM	
B. LCS duplicate (LCSD) %R	NA		NA	
C. LCS/LCSD RPD	NA		NA	
6. Matrix spike (MS)				
A. MS %R	DQM		DQM	
B. MS duplicate (MSD) %R	DQM		DQM	
C. MS/MSD precision (RPD)		DQM		DQM
7. Field Duplicate precision (RPD)	NA		NA	

M – Manual Review %R - percent recovery RPD - relative percent difference
DQM – Data Qualification Module

Comments:
This section presents a discussion of any additions or changes to the electronic data validation for compounds analyzed by Method 8270D.

6. Sample location G4MW053(0.5-10) was used as the MS/MSD. The RPDs between the MS/MSD pair were above the control limits for 2-chloronaphthalene and 2,4-dinitrophenol. The parent sample was qualified as estimated for these compounds.

SDG	Sample ID	Method	Analyte	Result	T or D	Units	Qualifier	Reason	Dilution
MA26019	G4MW016_20110126	E353.2	Nitrate	<0.020		mg/l	UJ	MS/MSD Recovery and MS/MSD RPD	1
MA26019	G4MW016_20110126	SW6010	Arsenic	0.0048	T	mg/l	UB	Blank Contamination	1
MA26019	G4MW017_20110126	SW6010	Chromium	0.0021	T	mg/l	UB	Blank Contamination	1
MA26019	G4MW017_20110126	SW6010	Chromium	0.0024	D	mg/l	UB	Blank Contamination	1
MA26019	G4MW017_20110126	SW8270	Benzo(a)pyrene	<1.0		ug/l	UJ	LCS Recovery	1
MA26019	G4MW023_20110127	SW6010	Arsenic	0.0074	T	mg/l	UB	Blank Contamination	1
MA26019	G4MW023_20110127	SW6010	Chromium	0.0053	T	mg/l	UB	Blank Contamination	1
MA26019	G4MW023_20110127	SW6010	Arsenic	0.0041	D	mg/l	UB	Blank Contamination	1
MA26019	G4MW023_20110127	SW8270	Benzo(a)anthracene	<1.0		ug/l	UJ	MS/MSD Recovery	1
MA26019	G4MW023_20110127	SW8270	bis(2-Ethylhexyl)phthalate	<5.1		ug/l	R	MS/MSD Recovery	1
MA26019	G4MW023_20110127	SW8270	Di-n-octyl phthalate	<5.1		ug/l	R	MS/MSD Recovery	1
MA26019	G4MW023_20110127	SW8270	Dibenzo(a,h)anthracene	<1.0		ug/l	R	MS/MSD Recovery	1
MA26019	G4MW023_20110127	SW8270	Pyrene	<1.0		ug/l	UJ	MS/MSD Recovery	1
MA26019	G4MW023_20110127	SW8270	Benzo(g,h,i)perylene	<1.0		ug/l	R	MS/MSD Recovery	1
MA26019	G4MW023_20110127	SW8270	Indeno(1,2,3-cd)pyrene	<1.0		ug/l	R	MS/MSD Recovery	1

SDG	Sample ID	Method	Analyte	Result	T or D	Units	Qualifier	Reason	Dilution
MA26019	G4MW023_20110127	SW8270	Benzo(a)pyrene	<1.0		ug/l	UJ	LCS Recovery	1
MA26019	G4MW023_20110127	SW8270	2-Chloronaphthalene	<1.0		ug/l	UJ	MS Recovery	1
MA26019	G4MW023_20110127	SW8270	Benzyl Butyl Phthalate	<5.1		ug/l	UJ	MS/MSD Recovery	1
MA26019	G4MW023_20110127	SW8270	p-Chloroaniline	<1.0		ug/l	R	MSD Recovery	1
MA26019	G4MW023_20110127	SW8270	1,2-Benz-phenanthracene	<1.0		ug/l	UJ	MS/MSD Recovery	1
MA26019	G4MW027_20110127	SW6010	Chromium	0.0034	T	mg/l	UB	Blank Contamination	1
MA26019	G4MW027_20110127	SW8270	Benzo(a)pyrene	<1.0		ug/l	UJ	LCS Recovery	1
MA26019	G4MW034_20110126	SW6010	Chromium	0.0044	T	mg/l	UB	Blank Contamination	1
MA26019	G4MW034_20110126	SW6010	Chromium	0.0022	D	mg/l	UB	Blank Contamination	1
MA26019	G4MW034_20110126	SW8270	Benzo(a)pyrene	<1.0		ug/l	UJ	LCS Recovery	1
MA26019	G4MW035_20110126	SW6010	Chromium	0.0035	T	mg/l	UB	Blank Contamination	1
MA26019	G4MW035_20110126	SW8270	Benzo(a)pyrene	<1.0		ug/l	UJ	LCS Recovery	1
MA26019	G4MW037_20110127	SW6010	Arsenic	0.009	D	mg/l	UB	Blank Contamination	1
MA26019	G4MW037_20110127	SW6010	Arsenic	0.0057	T	mg/l	UB	Blank Contamination	1
MA26019	G4MW037_20110127	SW6010	Chromium	0.0042	T	mg/l	UB	Blank Contamination	1

SDG	Sample ID	Method	Analyte	Result	T or D	Units	Qualifier	Reason	Dilution
MA26019	G4MW037_20110127	SW8270	Benzo(a)pyrene	<1.0		ug/l	UJ	LCS Recovery	1
MA26019	G4MW040_20110128	E353.2	Nitrite-N	<0.020		mg/l	UJ	MS/MSD Recovery	1
MA26019	G4MW040_20110128	E353.2	Nitrate	0.34		mg/l	J	MS/MSD Recovery	1
MA26019	G4MW040_20110128	SW6010	Lead	0.025	T	mg/l	UB	Blank Contamination	1
MA26019	G4MW040_20110128	SW6010	Arsenic	0.0057	T	mg/l	UB	Blank Contamination	1
MA26019	G4MW040_20110128	SW6010	Lead	0.014	D	mg/l	UB	Blank Contamination	1
MA26019	G4MW040_20110128	SW6010	Arsenic	0.0059	D	mg/l	UB	Blank Contamination	1
MA26019	G4MW040_20110128	SW8270	Benzo(a)pyrene	<1.0		ug/l	UJ	LCS Recovery	1
MA26019	G4MW043_20110127	SW8270	Benzo(a)pyrene	<1.0		ug/l	UJ	LCS Recovery	1
MA26019	G4MW043_20110127	SW8270	Dibenzo(a,h)anthracene	<1.0		ug/l	UJ	MS/MSD Recovery	1
MA26019	G4MW043_20110127	SW8270	p-Chloroaniline	<1.0		ug/l	R	MS/MSD Recovery	1
MA26019	G4MW043_20110127	SW8270	Di-n-octyl phthalate	<5.1		ug/l	UJ	MS/MSD Recovery	1
MA26019	G4MW043_20110127	SW8270	Benzo(g,h,i)perylene	<1.0		ug/l	UJ	MS/MSD Recovery	1
MA26019	G4MW043_20110127	SW8270	Benzo(a)anthracene	<1.0		ug/l	UJ	MS/MSD Recovery	1
MA26019	G4MW043_20110127	SW8270	Indeno(1,2,3-cd)pyrene	<1.0		ug/l	UJ	MS/MSD Recovery	1

SDG	Sample ID	Method	Analyte	Result	T or D	Units	Qualifier	Reason	Dilution
MA26019	G4MW044_20110126	SW6010	Chromium	0.0041	T	mg/l	UB	Blank Contamination	1
MA26019	G4MW044_20110126	SW8270	Benzo(a)pyrene	<1.0		ug/l	UJ	LCS Recovery	1
MA26019	G4MW045_20110126	SW6010	Arsenic	0.0061	T	mg/l	UB	Blank Contamination	1
MA26019	G4MW045_20110126	SW6010	Arsenic	0.007	D	mg/l	UB	Blank Contamination	1
MA26019	G4MW045_20110126	SW8270	Benzo(a)pyrene	<1.0		ug/l	UJ	LCS Recovery	1
MA26019	G4MW046_20110127	SW6010	Chromium	0.0022	D	mg/l	UB	Blank Contamination	1
MA26019	G4MW046_20110127	SW6010	Cadmium	0.0006	T	mg/l	UB	Blank Contamination	1
MA26019	G4MW046_20110127	SW8270	Benzo(a)pyrene	<1.0		ug/l	UJ	LCS Recovery	1
MA26019	G4MW10 (012711)	SW8270	Benzo(a)pyrene	<1.0		ug/l	UJ	LCS Recovery	1
MA26019	G4MW11 (012711)	SW6010	Silver	0.0006	T	mg/l	UB	Blank Contamination	1
MA26019	G4MW11 (012711)	SW8270	Benzo(a)pyrene	<1.0		ug/l	UJ	LCS Recovery	1
MA26019	G4MW13 (012711)	SW8270	3-Nitroaniline	<2.0		ug/l	R	MS Recovery	1
MA26019	G4MW13 (012711)	SW8270	Indeno(1,2,3-cd)pyrene	<1.0		ug/l	UJ	MS/MSD Recovery	1
MA26019	G4MW13 (012711)	SW8270	N-Nitrosodiphenylamine	<1.0		ug/l	UJ	MS/MSD RPD	1
MA26019	G4MW13 (012711)	SW8270	Pyrene	<1.0		ug/l	UJ	MS Recovery	1

SDG	Sample ID	Method	Analyte	Result	T or D	Units	Qualifier	Reason	Dilution
MA26019	G4MW13 (012711)	SW8270	2-Methyl naphthalene	<1.0		ug/l	UJ	MSD Recovery	1
MA26019	G4MW13 (012711)	SW8270	Anthracene	<1.0		ug/l	UJ	MS Recovery	1
MA26019	G4MW13 (012711)	SW8270	Benzo(g,h,i)perylene	<1.0		ug/l	UJ	MS/MSD Recovery	1
MA26019	G4MW13 (012711)	SW8270	Fluoranthene	<1.0		ug/l	UJ	MS Recovery	1
MA26019	G4MW13 (012711)	SW8270	Dibenzo(a,h)anthracene	<1.0		ug/l	UJ	MS/MSD Recovery	1
MA26019	G4MW13 (012711)	SW8270	1,2-Benz-phenanthracene	<1.0		ug/l	UJ	MS/MSD Recovery	1
MA26019	G4MW13 (012711)	SW8270	Benzyl Butyl Phthalate	<5.1		ug/l	UJ	MS Recovery	1
MA26019	G4MW13 (012711)	SW8270	Carbazole	<1.0		ug/l	UJ	MS Recovery	1
MA26019	G4MW13 (012711)	SW8270	Hexachloro-1,3-Butadiene	<1.0		ug/l	UJ	MSD Recovery	1
MA26019	G4MW13 (012711)	SW8270	Hexachlorobenzene	<1.0		ug/l	UJ	MS Recovery	1
MA26019	G4MW13 (012711)	SW8270	Di-n-octyl phthalate	<5.1		ug/l	UJ	MS/MSD Recovery	1
MA26019	G4MW13 (012711)	SW8270	bis(2-Chloroethoxy)methane	<1.0		ug/l	UJ	MS/MSD Recovery	1
MA26019	G4MW13 (012711)	SW8270	p-Chloroaniline	<1.0		ug/l	R	MS/MSD Recovery	1
MA26019	G4MW13 (012711)	SW8270	4-Bromophenyl Phenyl Ether	<1.0		ug/l	UJ	MS Recovery	1
MA26019	G4MW13 (012711)	SW8270	p-Nitroaniline	<2.0		ug/l	R	MS Recovery	1

SDG	Sample ID	Method	Analyte	Result	T or D	Units	Qualifier	Reason	Dilution
MA26019	G4MW13 (012711)	SW8270	Naphthalene	<1.0		ug/l	UJ	MSD Recovery	1
MA26019	G4MW13 (012711)	SW8270	Benzo(a)anthracene	<1.0		ug/l	UJ	MS/MSD Recovery	1
MA26019	G4MW14 (012511)	SW8260	Benzene	<1.0		ug/l	UJ	LCS/LCSD RPD	1
MA26019	G4MW14 (012511)	SW8260	1,1-Dichloroethylene	<1.0		ug/l	UJ	LCS/LCSD RPD	1
MA26019	G4MW14 (012511)	SW8260	1,1-Dichloroethane	<1.0		ug/l	UJ	LCS/LCSD RPD	1
MA26019	G4MW14 (012511)	SW8260	1,1,1-Trichloroethane	<1.0		ug/l	UJ	LCS/LCSD RPD	1
MA26019	G4MW14 (012511)	SW8260	Chloroform	<1.0		ug/l	UJ	LCS/LCSD RPD	1
MA26019	G4MW14 (012511)	SW8260	Carbon Tetrachloride	<1.0		ug/l	UJ	LCS/LCSD RPD	1
MA26019	G4MW14 (012511)	SW8260	Ethylbenzene	<1.0		ug/l	UJ	LCS/LCSD RPD	1
MA26019	G4MW14 (012511)	SW8260	trans-1,2-Dichloroethene	<1.0		ug/l	UJ	LCS/LCSD RPD	1
MA26019	G4MW14 (012511)	SW8260	Xylenes (total)	<1.0		ug/l	UJ	LCS/LCSD RPD	1
MA26019	G4MW14 (012511)	SW8260	Bromodichloromethane	<1.0		ug/l	UJ	LCS/LCSD RPD	1
MA26019	G4MW14 (012511)	SW8260	Styrene	<1.0		ug/l	UJ	LCS/LCSD RPD	1
MA26019	G4MW14 (012511)	SW8260	Tribromomethane	<1.0		ug/l	UJ	LCS/LCSD RPD	1
MA26019	G4MW14 (012511)	SW8260	Chlorodibromomethane	<1.0		ug/l	UJ	LCS Recovery and LCS/LCSD RPD	1

SDG	Sample ID	Method	Analyte	Result	T or D	Units	Qualifier	Reason	Dilution
MA26019	G4MW14 (012511)	SW8260	1,4-Dichlorobenzene	<1.0		ug/l	UJ	LCS/LCSD RPD	1
MA26019	G4MW18 (012611)	SW8270	Benzo(a)pyrene	<1.0		ug/l	UJ	LCS Recovery	1
MA26019	G4MW20 (012711)	SW8270	Benzo(a)pyrene	<1.0		ug/l	UJ	LCS Recovery	1
MA26019	G4MW24 (012711)	SW8270	Benzo(a)pyrene	<1.0		ug/l	UJ	LCS Recovery	1
MA26019	G4MW25 (012711)	SW8270	Benzo(a)pyrene	<1.0		ug/l	UJ	LCS Recovery	1
MA26019	G4MW29 (012711)	SW6010	Silver	0.0009	T	mg/l	UB	Blank Contamination	1
MA26019	G4MW30 (012611)	SW8270	Benzo(a)pyrene	<1.0		ug/l	UJ	LCS Recovery	1
MA26019	G4MW31 (012511)	SW8260	Carbon Tetrachloride	<1.0		ug/l	UJ	LCS/LCSD RPD	1
MA26019	G4MW31 (012511)	SW8260	Bromodichloromethane	<1.0		ug/l	UJ	LCS/LCSD RPD	1
MA26019	G4MW31 (012511)	SW8260	Xylenes (total)	<1.0		ug/l	UJ	LCS/LCSD RPD	1
MA26019	G4MW31 (012511)	SW8260	Ethylbenzene	<1.0		ug/l	UJ	LCS/LCSD RPD	1
MA26019	G4MW31 (012511)	SW8260	1,1-Dichloroethane	<1.0		ug/l	UJ	LCS/LCSD RPD	1
MA26019	G4MW31 (012511)	SW8260	Tribromomethane	<1.0		ug/l	UJ	LCS/LCSD RPD	1
MA26019	G4MW31 (012511)	SW8260	1,1,1-Trichloroethane	<1.0		ug/l	UJ	LCS/LCSD RPD	1
MA26019	G4MW31 (012511)	SW8260	Benzene	<1.0		ug/l	UJ	LCS/LCSD RPD	1

SDG	Sample ID	Method	Analyte	Result	T or D	Units	Qualifier	Reason	Dilution
MA26019	G4MW31 (012511)	SW8260	Chloroform	<1.0		ug/l	UJ	LCS/LCSD RPD	1
MA26019	G4MW31 (012511)	SW8260	trans-1,2-Dichloroethene	<1.0		ug/l	UJ	LCS/LCSD RPD	1
MA26019	G4MW31 (012511)	SW8260	Chlorodibromomethane	<1.0		ug/l	UJ	LCS Recovery and LCS/LCSD RPD	1
MA26019	G4MW31 (012511)	SW8260	1,4-Dichlorobenzene	<1.0		ug/l	UJ	LCS/LCSD RPD	1
MA26019	G4MW31 (012511)	SW8260	Styrene	<1.0		ug/l	UJ	LCS/LCSD RPD	1
MA26019	G4MW31 (012511)	SW8260	1,1-Dichloroethylene	<1.0		ug/l	UJ	LCS/LCSD RPD	1
MA26019	G4MW32 (012511)	SW8260	1,4-Dichlorobenzene	<1.0		ug/l	UJ	LCS/LCSD RPD	1
MA26019	G4MW32 (012511)	SW8260	Benzene	<1.0		ug/l	UJ	LCS/LCSD RPD	1
MA26019	G4MW32 (012511)	SW8260	1,1-Dichloroethylene	<1.0		ug/l	UJ	LCS/LCSD RPD	1
MA26019	G4MW32 (012511)	SW8260	1,1-Dichloroethane	<1.0		ug/l	UJ	LCS/LCSD RPD	1
MA26019	G4MW32 (012511)	SW8260	Bromodichloromethane	<1.0		ug/l	UJ	LCS/LCSD RPD	1
MA26019	G4MW32 (012511)	SW8260	Tribromomethane	<1.0		ug/l	UJ	LCS/LCSD RPD	1
MA26019	G4MW32 (012511)	SW8260	1,1,1-Trichloroethane	<1.0		ug/l	UJ	LCS/LCSD RPD	1
MA26019	G4MW32 (012511)	SW8260	Chloroform	<1.0		ug/l	UJ	LCS/LCSD RPD	1
MA26019	G4MW32 (012511)	SW8260	Carbon Tetrachloride	<1.0		ug/l	UJ	LCS/LCSD RPD	1

SDG	Sample ID	Method	Analyte	Result	T or D	Units	Qualifier	Reason	Dilution
MA26019	G4MW32 (012511)	SW8260	trans-1,2-Dichloroethene	<1.0		ug/l	UJ	LCS/LCSD RPD	1
MA26019	G4MW32 (012511)	SW8260	Chlorodibromomethane	<1.0		ug/l	UJ	LCS Recovery and LCS/LCSD RPD	1
MA26019	G4MW32 (012511)	SW8260	Styrene	<1.0		ug/l	UJ	LCS/LCSD RPD	1
MA26019	G4MW32 (012511)	SW8260	Ethylbenzene	<1.0		ug/l	UJ	LCS/LCSD RPD	1
MA26019	G4MW32 (012511)	SW8260	Xylenes (total)	<1.0		ug/l	UJ	LCS/LCSD RPD	1
MA26019	G4MW32 (012511)	SW8270	Benzo(b)fluoranthene	<1.0		ug/l	UJ	MS/MSD RPD	1
MA26019	G4MW32 (012511)	SW8270	1,2-Benz-phenanthracene	<1.0		ug/l	UJ	MSD Recovery	1
MA26019	G4MW32 (012511)	SW8270	Benzo(a)anthracene	<1.0		ug/l	UJ	MSD Recovery	1
MA26019	G4MW32 (012511)	SW8270	Benzo(a)pyrene	<1.0		ug/l	UJ	MS/MSD RPD	1
MA26019	G4MW32 (012511)	SW8270	Benzo(g,h,i)perylene	<1.0		ug/l	UJ	MS/MSD Recovery and MS/MSD RPD	1
MA26019	G4MW32 (012511)	SW8270	Di-n-octyl phthalate	<5.0		ug/l	R	MSD Recovery	1
MA26019	G4MW32 (012511)	SW8270	bis(2-Ethylhexyl)phthalate	<5.0		ug/l	R	MSD Recovery	1
MA26019	G4MW32 (012511)	SW8270	p-Chloroaniline	<1.0		ug/l	UJ	MS/MSD RPD	1
MA26019	G4MW32 (012511)	SW8270	Dibenzo(a,h)anthracene	<1.0		ug/l	UJ	MS/MSD Recovery and MS/MSD RPD	1
MA26019	G4MW32 (012511)	SW8270	Indeno(1,2,3-cd)pyrene	<1.0		ug/l	UJ	MS/MSD Recovery and MS/MSD RPD	1

SDG	Sample ID	Method	Analyte	Result	T or D	Units	Qualifier	Reason	Dilution
MA26019	G4MW33 (012711)	SW8270	Benzo(a)pyrene	<1.0		ug/l	UJ	LCS Recovery	1
MA26019	G4MW39 (012611)	SW8270	Benzo(a)pyrene	<1.0		ug/l	UJ	LCS Recovery	1
MA26019	TRIP BLANK (012511)	SW8260	Tribromomethane	<1.0		ug/l	UJ	LCS/LCSD RPD	1
MA26019	TRIP BLANK (012511)	SW8260	1,1-Dichloroethylene	<1.0		ug/l	UJ	LCS/LCSD RPD	1
MA26019	TRIP BLANK (012511)	SW8260	Bromodichloromethane	<1.0		ug/l	UJ	LCS/LCSD RPD	1
MA26019	TRIP BLANK (012511)	SW8260	1,1,1-Trichloroethane	<1.0		ug/l	UJ	LCS/LCSD RPD	1
MA26019	TRIP BLANK (012511)	SW8260	Benzene	<1.0		ug/l	UJ	LCS/LCSD RPD	1
MA26019	TRIP BLANK (012511)	SW8260	Chloroform	<1.0		ug/l	UJ	LCS/LCSD RPD	1
MA26019	TRIP BLANK (012511)	SW8260	trans-1,2-Dichloroethene	<1.0		ug/l	UJ	LCS/LCSD RPD	1
MA26019	TRIP BLANK (012511)	SW8260	Xylenes (total)	<1.0		ug/l	UJ	LCS/LCSD RPD	1
MA26019	TRIP BLANK (012511)	SW8260	Chlorodibromomethane	<1.0		ug/l	UJ	LCS Recovery and LCS/LCSD RPD	1
MA26019	TRIP BLANK (012511)	SW8260	1,4-Dichlorobenzene	<1.0		ug/l	UJ	LCS/LCSD RPD	1
MA26019	TRIP BLANK (012511)	SW8260	Styrene	<1.0		ug/l	UJ	LCS/LCSD RPD	1
MA26019	TRIP BLANK (012511)	SW8260	Ethylbenzene	<1.0		ug/l	UJ	LCS/LCSD RPD	1
MA26019	TRIP BLANK (012511)	SW8260	Carbon Tetrachloride	<1.0		ug/l	UJ	LCS/LCSD RPD	1

SDG	Sample ID	Method	Analyte	Result	T or D	Units	Qualifier	Reason	Dilution
MA26019	TRIP BLANK (012511)	SW8260	1,1-Dichloroethane	<1.0		ug/l	UJ	LCS/LCSD RPD	1
MA26019	Trip Blank (012611)	SW8260	Chlorodibromomethane	<1.0		ug/l	UJ	LCS Recovery and LCS/LCSD RPD	1
MA26019	Trip Blank (012611)	SW8260	1,1-Dichloroethylene	<1.0		ug/l	UJ	LCS/LCSD RPD	1
MA26019	Trip Blank (012611)	SW8260	1,1-Dichloroethane	<1.0		ug/l	UJ	LCS/LCSD RPD	1
MA26019	Trip Blank (012611)	SW8260	Bromodichloromethane	<1.0		ug/l	UJ	LCS/LCSD RPD	1
MA26019	Trip Blank (012611)	SW8260	Tribromomethane	<1.0		ug/l	UJ	LCS/LCSD RPD	1
MA26019	Trip Blank (012611)	SW8260	1,1,1-Trichloroethane	<1.0		ug/l	UJ	LCS/LCSD RPD	1
MA26019	Trip Blank (012611)	SW8260	Benzene	<1.0		ug/l	UJ	LCS/LCSD RPD	1
MA26019	Trip Blank (012611)	SW8260	Chloroform	<1.0		ug/l	UJ	LCS/LCSD RPD	1
MA26019	Trip Blank (012611)	SW8260	Carbon Tetrachloride	<1.0		ug/l	UJ	LCS/LCSD RPD	1
MA26019	Trip Blank (012611)	SW8260	Xylenes (total)	<1.0		ug/l	UJ	LCS/LCSD RPD	1
MA26019	Trip Blank (012611)	SW8260	1,4-Dichlorobenzene	<1.0		ug/l	UJ	LCS/LCSD RPD	1
MA26019	Trip Blank (012611)	SW8260	Styrene	<1.0		ug/l	UJ	LCS/LCSD RPD	1
MA26019	Trip Blank (012611)	SW8260	Ethylbenzene	<1.0		ug/l	UJ	LCS/LCSD RPD	1
MA26019	Trip Blank (012611)	SW8260	trans-1,2-Dichloroethene	<1.0		ug/l	UJ	LCS/LCSD RPD	1

HUNTER STEWART
ELECTRONIC VALIDATION REVIEW REPORT
SDG: MA26019
FST-39

Analytical data were evaluated in accordance with applicable USEPA SW-846 method requirements, "USEPA Contract Laboratory Program National Functional Guidelines for Organic Data Review" (October 1999), "USEPA Contract Laboratory Program National Functional Guidelines for Inorganic Data Review" (July 2002), analytical method control criteria, the analytical laboratory Quality Assurance Control Limits, the Fort Stewart Military Reservation and Hunter Army Airfield Quality Assurance Project Plan (ARCADIS-2008), and professional judgment.

The data review summarized in this report includes a review of all sample collection documentation and the electronic data validation of the analytical data housed in the project database. Sample collection documentation included sample collection logs and chains of custody. The electronic data validation was performed utilizing the EQuIS Data Qualification Module (DQM). DQM checks for the following parameters:

- Holding times and preservation;
- Blank contamination;
    1. Method blanks,
    2. Trip blanks,
    3. Equipment blanks;
- Matrix spike and Duplicate sample recovery;
- Matrix Spike and Matrix Spike Duplicate relative percent differences;
- Laboratory Control Sample and Duplicate recovery;
- Laboratory Control Sample and Duplicate relative percent differences;
- Surrogate recovery (organic analyses only); and
- Field duplicate relative percent difference.

Manual review was performed for the following items:

- Sample dilutions and reporting limits;
- Case Narratives; and
- Laboratory Duplicates

Data was generated by Shealy Environmental Services, Inc. – West Columbia, South Carolina. Data qualifiers were applied electronically to the database with any additional qualifiers added manually. A summary of the data as amended by data qualifiers is included with the original hard copy reports.

The attached table summarizes the data that were qualified due to QC deficiencies. The table indicates compounds/analytes qualified based on electronic and manual validation. Refer to the associated method section of the validation checklist for a detailed explanation of qualification. All other data in these SDGs are considered usable as reported.

HUNTER STEWART
ELECTRONIC VALIDATION REVIEW REPORT
SDG: MA26019
FST-39

The following list of data qualifiers and definitions were applied in accordance with qualification criteria defined in the greater than guidance documents:

UB Compound/analyte detected in blank or associated blank, qualified as a non-detect at listed value.

J The analyte was positively identified, but the associated numerical value is the approximate concentration of the analyte in the sample.

UJ The analyte was not detected greater than the reporting limit; however, the reported quantitation limit is approximate and may, or may not represent the actual limit of quantitation necessary to accurately and precisely measure analyte in the sample.

R The sample result is rejected due to serious deficiencies in the ability to analyze the sample and meet quality control criteria; and the presence or absence of the analyte cannot be verified.

U Not detected at the quantitative reporting limit

DQM RUN BY:	Rachelle Borne	03/12/11
REVIEW PERFORMED BY:	Rachelle Borne	03/12/11
SIGNATURE:	Rachelle Borne	03/21/11
PEER REVIEW:	Dennis Capria	03/23/11

HUNTER STEWART
ELECTRONIC VALIDATION REVIEW REPORT
SDG: MA26019
FST-39

The following samples were included in this validation:

SDG	Sample ID	Sample Date	Parent Sample
MA26019	G4MW10 (012711)	1/27/2011	
MA26019	G4MW11 (012711)	1/27/2011	
MA26019	G4MW13 (012711)	1/27/2011	
MA26019	G4MW14 (012511)	1/25/2011	
MA26019	G4MW18 (012611)	1/26/2011	
MA26019	G4MW19 (012711)	1/27/2011	
MA26019	G4MW20 (012711)	1/27/2011	
MA26019	G4MW24 (012711)	1/27/2011	
MA26019	G4MW25 (012711)	1/27/2011	
MA26019	G4MW29 (012711)	1/27/2011	
MA26019	G4MW30 (012611)	1/26/2011	
MA26019	G4MW31 (012511)	1/25/2011	
MA26019	G4MW32 (012511)	1/25/2011	
MA26019	G4MW33 (012711)	1/27/2011	
MA26019	G4MW36 (012711)	1/27/2011	
MA26019	G4MW39 (012611)	1/26/2011	
MA26019	G4MW41 (012711)	1/27/2011	
MA26019	G4MW016_20110126	1/26/2011	
MA26019	G4MW017_20110126	1/26/2011	
MA26019	G4MW022_20110125	1/25/2011	
MA26019	G4MW023_20110127	1/27/2011	
MA26019	G4MW026_20110125	1/25/2011	
MA26019	G4MW027_20110127	1/27/2011	
MA26019	G4MW028_20110125	1/25/2011	
MA26019	G4MW034_20110126	1/26/2011	
MA26019	G4MW035_20110126	1/26/2011	
MA26019	G4MW037_20110127	1/27/2011	
MA26019	G4MW038_20110126	1/26/2011	
MA26019	G4MW040_20110128	1/28/2011	
MA26019	G4MW042_20110126	1/26/2011	
MA26019	G4MW043_20110127	1/27/2011	
MA26019	G4MW044_20110126	1/26/2011	
MA26019	G4MW045_20110126	1/26/2011	
MA26019	G4MW046_20110127	1/27/2011	
MA26019	G4MW047_20110126	1/26/2011	
MA26019	TRIP BLANK (012511)	1/25/2011	
MA26019	Trip Blank (012611)	1/27/2011	
MA26019	TRIP BLANK (012711)	1/27/2011	
MA26019	TRIP BLANK (2) (012711)	1/27/2011	
MA26019	DUP02 (012511)	1/25/2011	G4MW32 (012511)
MA26019	G4DUP-01_20110126	1/26/2011	G4MW016_20110126

HUNTER STEWART
ELECTRONIC VALIDATION REVIEW REPORT
SDG: MA26019
FST-39

ANALYTICAL DATA PACKAGE DOCUMENTATION

GENERAL INFORMATION

Items Reviewed	Reported		Performance Acceptable		Not Required
	No	Yes	No	Yes	
1. Sample results		X		X	
2. Parameters analyzed		X		X	
3. Methods of analysis		X		X	
4. Reporting limits of analysis		X		X	
5. Master tracking list		X		X	
6. Sample collection date		X		X	
7. Laboratory sample received date		X		X	
8. Sample preparation/extraction date		X		X	
9. Sample analysis date		X		X	
10. Copy of chain-of-custody form signed by lab sample custodian		X		X	
11. Narrative summary of QA or sample problems provided		X		X	
12. Laboratory Signature		X		X	
13. South Carolina Certification Number		X		X	

QA - quality assurance

The analytical report was complete with the following exceptions or notations.

Note: The laboratory reported values between the quantitative reporting limit and the method detection limit as estimated concentrations. The "J" qualifier was retained in this validation. Non-detect values are reported at the quantitative reporting limit.

HUNTER STEWART
ELECTRONIC VALIDATION REVIEW REPORT
SDG: MA26019
FST-39

VOLATILE ORGANIC COMPOUNDS

Items Reviewed	DQM Deficiency		Qualification Applied	
	No	Yes	No	Yes
1. Holding times/Preservation	DQM		DQM	
2. Reporting limits	M		M	
3. Blanks				
A. Method blanks	DQM		DQM	
B. Equipment blanks	NA		NA	
C. Trip blanks		DQM	DQM	
4. Surrogate spike recoveries	DQM		DQM	
5. Laboratory control sample (LCS) A. LCS %R		DQM		DQM
B. LCS duplicate (LCSD) %R	DQM		DQM	
C. LCS/LCSD RPD		DQM		DQM
6. Matrix spike (MS)				
A. MS %R	NA		NA	
B. MS duplicate (MSD) %R	NA		NA	
C. MS/MSD precision (RPD)	NA		NA	
7. Field Duplicate precision (RPD)	DQM		DQM	

M – Manual Review %R - percent recovery RPD - relative percent difference
DQM – Data Qualification Module

Comments:
This section presents a discussion of any additions or changes to the electronic data validation for compounds analyzed by Method 8260B.

2. Sample G4MW41(012711) was analyzed at a 10x dilution due to elevated concentrations of target analytes. There were elevated concentrations for non-detect results.

3C. The compound methylene chloride was detected in three of the four trip blanks. The associated field samples were non-detect for this compound; therefore, qualification of the data was not warranted.

5A. The recovery of the compound dibromochloromethane was below the control limit in the LCS for batch 51631. The associated field samples were qualified as estimated for this compound. See the attached qualification summary for details of the qualifications.

5C. The RPDs between the LCS/LSCD pair were above the control limit for several compounds in batch 51631. The associated field samples were qualified as estimated for these compounds. See the attached qualification summary for details of the qualifications.

7. Sample location DUP-02(012511) was collected as a field duplicate for G4MW32(012511). The RPDs were acceptable at less than 40%.

Sample location G4DUP-01_20110126 was collected as a field duplicate of G4MW016_20110126. The RPDs were acceptable at less than 40%.

HUNTER STEWART
ELECTRONIC VALIDATION REVIEW REPORT
SDG: MA26019
FST-39

SEMIVOLATILE ORGANIC COMPOUNDS

Items Reviewed	DQM Deficiency		Qualification Applied	
	No	Yes	No	Yes
1. Holding times/Preservation	DQM		DQM	
2. Reporting limits	M		M	
3. Blanks				
A. Method blanks		DQM	DQM	
B. Equipment blanks	NA		NA	
4. Surrogate spike recoveries	DQM		DQM	
5. Laboratory control sample (LCS) A. LCS %R		DQM		DQM
B. LCS duplicate (LCSD) %R	NA		NA	
C. LCS/LCSD RPD	NA		NA	
6. Matrix spike (MS)				
A. MS %R		DQM		DQM
B. MS duplicate (MSD) %R		DQM		DQM
C. MS/MSD precision (RPD)		DQM		DQM
7. Field Duplicate precision (RPD)	DQM		DQM	

M – Manual Review %R - percent recovery RPD - relative percent difference
DQM – Data Qualification Module

Comments:
This section presents a discussion of any additions or changes to the electronic data validation for compounds analyzed by Method 8270D.

3A. The compound naphthalene was detected in the method blank for batch 51711. The associated field samples were non-detect for this compound; therefore, qualification of the data was not warranted.

5A. The recovery of the compound benzo(a)pyrene was below the control limit in the LCS for batch 51711. The associated field samples were qualified as estimated for this compound. See the attached qualification summary for details of the qualifications.

6. Sample location G4MW32(012511) was used as the MS/MSD. The recoveries of di-n-octylphthalate and bis(2-ethylhexyl)phthalate were less than ten percent in the MSD. Both of these compounds were qualified as rejected in this sample. Several recoveries were outside the control limits in the MS and/or the MSD. Several RPDs between the MS/MSD pair were outside the control limits. The parent sample was qualified as estimated for these compounds when applicable. See the attached qualification summary for details of the qualifications.

Sample location G4MW023 was used as the MS/MSD. The recoveries of benzo(g,h,i)perylene, dibenzo(a,h)anthracene, di-n-octyl phthalate, bis(2-ehtylhexyl)phthalate, indeno(1,2,3-cd)pyrene and 4-chloroaniline were less than ten percent in the MS and/or the MSD. Benzo(g,h,i)perylene, dibenzo(a,h)anthracene, di-n-octyl phthalate, bis(2-ehtylhexyl)phthalate, indeno(1,2,3-cd)pyrene and 4-chloroaniline were qualified as rejected in the parent sample. Several recoveries were outside the control limits in the MS and/or the MSD. Several RPDs between the MS/MSD pair were outside the control limits. The parent sample was qualified as estimated for these compounds when applicable. See the attached qualification summary for details of the qualifications.

Sample location G4MW043 was used as the MS/MSD. The recovery of 4-chloroaniline was less than ten percent in the MS and the MSD. The parent sample was qualified as rejected for this compound. The recoveries of several compounds were below the control limit in the MS and/or the MSD. The parent sample was qualified as estimated for these compounds when applicable. See the attached qualification summary for details of the qualifications.

Sample location G4MW13(012711) was used as the MS/MSD. The recoveries of 4-chloroaniline, 3-nitroaniline and 4-nitroaniline were less than ten percent in the MS and/or the MSD. The parent sample was qualified as rejected for these compounds. The recoveries of several compounds were below the control limit in the MS and/or the MSD. The RPD between the MS/MSD pair was above the control limit for diphenylamine. The parent sample was qualified as estimated for these compounds when applicable. See the attached qualification summary for details of the qualifications.

7. Sample location DUP-02(012511) was collected as a field duplicate for G4MW32(012511). The RPDs were acceptable at non-detect.

   Sample location G4DUP-01_20110126 was collected as a field duplicate of G4MW016_20110126. The RPDs were acceptable at non-detect.

METALS

Items Reviewed	DQM Deficiency		Qualification Applied	
	No	Yes	No	Yes
1. Holding times/Preservation	DQM		DQM	
2. Reporting limits	M		M	
3. Blanks				
A. Method blanks		DQM	DQM	
B. Equipment blanks	NA		NA	
4. Total vs. Dissolved	M		M	
5. Laboratory control sample (LCS) A. LCS %R		DQM		DQM
B. LCS duplicate (LCSD) %R	NA		NA	
C. LCS/LCSD RPD	NA		NA	
6. Matrix spike (MS)				
A. MS %R		DQM		DQM
B. MS duplicate (MSD) %R		DQM		DQM
C. MS/MSD precision (RPD)		DQM		DQM
7. Field Duplicate precision (RPD)	DQM		DQM	

M – Manual Review %R - percent recovery RPD - relative percent difference
DQM – Data Qualification Module

Comments:
This section presents a discussion of any additions or changes to the electronic data validation for compounds analyzed by Methods 6010C and 7470A.

3A. Total and dissolved arsenic were detected in the method blank for batch 51574. Total and dissolved arsenic, cadmium and chromium were detected in the method blank for batch 51695. Total and dissolved silver were detected in the method blanks for batch 51696 and 51872. Total and dissolved arsenic, lead and silver were detected in the method blank for batch 51840. The associated field samples were qualified as non-detect for these metals if the sample concentrations were less than five times the blank values. See attached qualification summary for details of the qualifications.

6. Sample locations G4MW016, G4DUP-01, G4MW023, G4MW043, G4MW18(012611), G4MW30(012611), G4MW29(012711) and G4MW36(012711) were used as the MS/MSDs for method 6010C. The recoveries and RPDs were acceptable.

Sample locations DUP02(012511), G4MW022, G4DUP-01, G4MW023, G4MW043, G4MW040, G4MW30(012611), G4MW24(012711) and G4MW29(012711) were used as MS/MSDs for mercury. The recoveries and RPDs were acceptable.

7. Sample location DUP-02(012511) was collected as a field duplicate for G4MW32(012511). The RPDs were acceptable at less than 40%.

Sample location G4DUP-01_20110126 was collected as a field duplicate of G4MW016_20110126. The RPDs were acceptable at less than 40%.

HUNTER STEWART
ELECTRONIC VALIDATION REVIEW REPORT
SDG: MA26019
FST-39

GENERAL CHEMISTRY

Items Reviewed	DQM Deficiency		Qualification Applied	
	No	Yes	No	Yes
1. Holding times/Preservation	DQM		DQM	
2. Reporting limits	M		M	
3. Blanks				
A. Method blanks	DQM		DQM	
B. Equipment blanks	NA		NA	
4. Lab Duplicate	M		M	
5. Laboratory control sample (LCS) A. LCS %R	DQM		DQM	
B. LCS duplicate (LCSD) %R	DQM		DQM	
C. LCS/LCSD RPD	DQM		DQM	
6. Matrix spike (MS)				
A. MS %R		DQM		DQM
B. MS duplicate (MSD) %R		DQM		DQM
C. MS/MSD precision (RPD)		DQM		DQM
7. Field/Lab Duplicate precision (RPD)	DQM		DQM	

M – Manual Review %R - percent recovery RPD - relative percent difference
DQM – Data Qualification Module

Comments:
This section presents a discussion of any additions or changes to the electronic data validation for compounds analyzed by Methods 353.2 – Nitrate/Nirite, SM2320B – Alkalinity, 300.0 – Sulfate/Chloride and TOC – SM5310C.

3. Several samples required a dilution for sulfate and nitrate due to elevated concentrations.

4. Sample location G4MW040 was used as the laboratory duplicate for sulfate. The RPD was acceptable.

6. Sample location G4MW016 was used as the MS/MSD for nitrate. The recovery of nitrate was below the control limit in the MS and the MSD. The RPD for nitrate was above the control limit. The parent sample was qualified as estimated for nitrate.

   Sample location G4MW040 was used as the MS/MSD for nitrate. The recovery of nitrate was below the control limit in the MS and the MSD. The parent sample was qualified as estimated for nitrate.

   Sample locations G4DUP-01 and G4MW040 were used as MS/MSDs for alkalinity and chloride. The recoveries and RPDs were acceptable.

   Sample location G4MW040 was used as the MS/MSD for nitrite. The recoveries of nitrite were below the control limit in the MS and the MSD. The parent sample was qualified as estimated for nitrite.

   Sample location G4MW016 was used as the MS/MSD for TOC. The recoveries and RPD were acceptable.

7. Sample location G4DUP-01_20110126 was collected as a field duplicate of G4MW016_20110126. The RPDs were acceptable at less than 40%.

Appendix E

Soil Boring Logs

HTRW DRILLING LOG

PROJECT	INSPECTOR	HOLE NUMBER	SHEET
Ft. Stewart UST	M. Vest	22-01	1 of 1

ELEV (A)	DEPTH (B)	DESCRIPTION OF MATERIALS (C)	FIELD SCREENING RESULTS (D)	GEOTECH SAMPLE OR CORE BOX NO (E)	ANALYTICAL SAMPLE NO (F)	REMARKS (G)
	0.0	Concrete Pad				
	1.0	Clay & Sand, light yellowish brown, fine	0.0 ppm		Soil Sample 2201A1	Piezometer Casing
	2.0					
	3.0					
	4.0		140.0 ppm			
	5.0	Sand, black, fine to medium			Approx.	
	6.0		961.0 ppm			
	7.0					
	8.0					Piezometer Screen
	9.0		1484 ppm		Soil Sample 2201D1	
	10.0					

Groundwater Sample 2201W2 Collected From Piezometer

96-108P/100396.SAVforms

HTRW DRILLING LOG

PROJECT	INSPECTOR	HOLE NUMBER	SHEET
Ft. Stewart UST	M. Vest	22-02	1 of 1

ELEV (A)	DEPTH (B)	DESCRIPTION OF MATERIALS (C)	FIELD SCREENING RESULTS (D)	GEOTECH SAMPLE OR CORE BOX NO (E)	ANALYTICAL SAMPLE NO (F)	REMARKS (G)
	0.0	Concrete Pad				
	1.0	Sand, dark gray, fine	0.0 ppm			
	2.0					
	3.0		0.0 ppm		Soil Sample 2202B1	Piezometer Casing
	4.0	Sand, white, fine				
	5.0					Approx.
	6.0	Sand, dark gray, medium	0.0 ppm		Soil Sample 2202C1	
	7.0					
	8.0					Piezometer Screen
	9.0	Sand & Silt, dark reddish brown, fine	0.0 ppm			
	10.0					

Groundwater Sample 2202W2 Collected From Piezometer

96-108P/100396.SAVforms

HTRW DRILLING LOG

PROJECT	INSPECTOR	HOLE NUMBER	SHEET
Ft. Stewart UST	M. Vest	22-03	1 of 1

ELEV (A)	DEPTH (B)	DESCRIPTION OF MATERIALS (C)	FIELD SCREENING RESULTS (D)	GEOTECH SAMPLE OR CORE BOX NO (E)	ANALYTICAL SAMPLE NO (F)	REMARKS (G)
	0.0	Concrete Pad				
	1.0	Sand & Silt, dark brown, fine to medium	0.0 ppm			
	2.0	Sand, light gray, medium				
	3.0	Sand & Silt, dark brown, fine to medium	0.0 ppm		Soil Sample 2203B1	Piezometer Casing
	4.0	Sand, orangish brown, medium				
	5.0	Sand, dark brown, medium to coarse	0.0 ppm		Soil Sample 2203C1	Approx.
	6.0	Sand with some Silt, dark brown, medium				
	7.0					
	8.0		0.0 ppm			Piezometer Screen
	9.0					
	10.0					

Groundwater Sample 2203W2 Collected From Piezometer

96-108P/100396.SAVforms

HTRW DRILLING LOG

HOLE NUMBER 22-04

PROJECT Ft. Stewart UST | INSPECTOR M. Vest | SHEET 1 of 1

ELEV (A)	DEPTH (B)	DESCRIPTION OF MATERIALS (C)	FIELD SCREENING RESULTS (D)	GEOTECH SAMPLE OR CORE BOX NO (E)	ANALYTICAL SAMPLE NO (F)	REMARKS (G)
	0.0	Concrete Pad				
	1.0	Sand, brown, fine	0.0 ppm			
	2.0	Sand, gray, fine				
	3.0					Piezometer Casing
	4.0		0.0 ppm		Soil Sample 2204B1	
	5.0					
	6.0		0.0 ppm		Soil Sample 2204C1	Approx.
	7.0	Sand, dark brown, medium				
		Sand, dark brown, fine				
	8.0					Piezometer Screen
	9.0		0.0 ppm			
	10.0					

Groundwater Sample 2204W2 Collected From Piezometer

96-108P/100396.SAVforms

THIS PAGE INTENTIONALLY LEFT BLANK

HTRW DRILLING LOG

HOLE NUMBER 22-05

PROJECT Fort Stewart USTs

INSPECTOR L. Lumley

SHEET 1 of 4

ELEV. (A)	DEPTH (B)	DESCRIPTION OF MATERIALS (C)	FIELD SCREENING RESULTS (D)	GEOTECH SAMPLE OR CORE BOX NO. (E)	ANALYTICAL SAMPLE NO. (F)	REMARKS (G)
	1	SAND, fine to medium grained, damp, black (7.5 YR 2.5/1) to very dark gray (2.5 Y 3/1)	0.8 ppm			
	2					
	3		1.4ppm		Soil Sample 220511	
	4					
	5	SAND, fine to medium grained, damp, black (10YR 2/1) to dark reddish brown (5YR 2.5/2)				
	6		4.7ppm		Soil Sample 220521	
	7					petroleum odor
	8		1.3			
	9					▼ WET BELOW 9.0 FT BGS
	10					

HTRW DRILLING LOG

HOLE NUMBER 22-05
SHEET 2 OF 4

PROJECT Fort Stewart USTs
INSPECTOR L. Lumley

ELEV. (A)	DEPTH (B)	DESCRIPTION OF MATERIALS (C)	FIELD SCREENING RESULTS (D)	GEOTECH SAMPLE OR CORE BOX NO. (E)	ANALYTICAL SAMPLE NO. (F)	REMARKS (G)
	11	SAND, fine to medium grained, wet, dark reddish brown (5YR2.5/2) to dark brown (7.5YR3/2)	0.5ppm			
	12					
	13		0.7ppm		Soil Sample 220531	strong petroleum odor
	14					
	15	SAND, fine grained, wet, dark reddish brown (5YR3/2) to strong brown (7.5YR4/6)				
	16		1.6ppm			
	17					
	18		1.6ppm		Soil Sample 220541	petroleum odor
	19					
	20					

HTRW DRILLING LOG

HOLE NUMBER 22-05
SHEET 3 OF 4

PROJECT Fort Stewart USTs
INSPECTOR L Lumley

ELEV. (A)	DEPTH (B)	DESCRIPTION OF MATERIALS (C)	FIELD SCREENING RESULTS (D)	GEOTECH SAMPLE OR CORE BOX NO. (E)	ANALYTICAL SAMPLE NO. (F)	REMARKS (G)
	21	SAND, fine grained, wet, brown (10YR4/3) to pale yellow (2.5Y 7/4)	1.6ppm			
	22					
	23		2.2ppm		Soil Sample 220551	petroleum odor
	24					
	25	clayey SAND, wet, light yellowish brown (2.5Y6/3) to gray (5Y5/1)				
	26		2.0ppm		Soil Sample 220561	
	27					
	28		1.5ppm			
	29					
	30					

HTRW DRILLING LOG

22-05

PROJECT: Fort Stewart USTs | INSPECTOR: L. Lumley | SHEET: 4 of 4

ELEV. (A)	DEPTH (B)	DESCRIPTION OF MATERIALS (C)	FIELD SCREENING RESULTS (D)	GEOTECH SAMPLE OR CORE BOX NO. (E)	ANALYTICAL SAMPLE NO. (F)	REMARKS (G)
	31	clayey SAND, wet, dark gray (5Y 4/1)	0ppm			
	32					
	33		0ppm		Soil Sample 220571	
	34					
	35					END OF DRILLING AT 35.0 FT BGS No GROUNDWATER SAMPLE WAS COLLECTED AS PER THE WORKPLAN ADDENDUM

HTRW DRILLING LOG

HOLE NUMBER: 22-06

PROJECT: Fort Stewart USTs | INSPECTOR: C. Day | SHEET: 1 of 1

ELEV. (A)	DEPTH (B)	DESCRIPTION OF MATERIALS (C)	FIELD SCREENING RESULTS (D)	GEOTECH SAMPLE OR CORE BOX NO. (E)	ANALYTICAL SAMPLE NO. (F)	REMARKS (G)
	1	sandy CLAY (SC), organic rich, poor plasticity, well graded, black (2.5/N), damp, increasing moisture with depth	0ppm			
	2					
	3		0ppm	Soil Sample 220621	Soil Sample 220611	▼ WET BELOW 3.5 FT BGS
	4					
	5					
	6					
	7					
	8					END OF HAND AUGERING AT 7.3 FT BGS GROUNDWATER SAMPLE 2206W2 COLLECTED FROM PIEZOMETER SCREENED 0-7.3 FT BGS

HTRW DRILLING LOG

HOLE NUMBER 22-07

PROJECT: Fort Stewart USTs | INSPECTOR J. Celeste | SHEET 1 OF 1

ELEV (A)	DEPTH (B)	DESCRIPTION OF MATERIALS (C)	FIELD SCREENING RESULTS	GEOTECH SAMPLE OR CORE BOX	ANALYTICAL SAMPLE NO (F)	REMARKS (G)
		CONCRETE				
	1					
		Clayey SAND (SC), soft to firm, well-rounded, gray with orange and red mottling (2.5 Y 6/1)				
	2					
	3	SAND w/ SILT (SP-SM), fine grained, soft, moist, well to mod. rounded, black (2.5 Y 2.5/1)				
		NO RECOVERY				
	4					
		SAND w/ SILT (SP-SM), fine grained, very soft well to mod. rounded, moist black (2.5 Y 2.5/1)				
	5					▽ Wet below 5.0 ft BGS
	6					
	7	NO RECOVERY				
	8					PUSHED TO 11.0 FT BGS TO SET 3/4" MONITORING POINT SCREENED FROM 3.1 TO 11.1 BGS
	9					COLLECTED GROUNDWATER SAMPLE 220712 FROM MONITORING POINT
	10					

HTRW DRILLING LOG

HOLE NUMBER 22-08

PROJECT: Fort Stewart USTs

INSPECTOR J. Celeste

SHEET 1 OF 1

ELEV (A)	DEPTH (B)	DESCRIPTION OF MATERIALS (C)	FIELD SCREENING RESULTS	GEOTECH SAMPLE OR CORE BOX	ANALYTICAL SAMPLE NO (F)	REMARKS (G)
		SAND W/SILT (SW-SM), fine grained, soft (2.5Y 3/2)				
	1	SAND (SW), fine to medium grained, some silt, well to mod. rounding, soft and moist (2.5Y 2.5/1)				
	2					
	3					
	4	NO RECOVERY				
	5	SAND(SW), fine to medium grained, some silt, well to mod. rounding, soft and moist (2.5Y 2.5/1)				
	6	SAND(SP), fine grained, some silt, subrounded, soft and moist (2.5Y 7/1)				▽ wet below 6.0 ft BGS
	7	SAND(SW), fine to medium grained, soft, wet, subangular to subrounded, dark gray brown (2.5Y 4/2)				
	8	NO RECOVERY				
	9					PUSHED TO 10.0 FT BGS TO SET 3/4" MONITORING POINT SCREENED FROM 2.6 TO 9.6 FT BGS COLLECTED GROUNDWATER SAMPLE 220812 FROM MONITORING POINT
	10					

HTRW DRILLING LOG

HOLE NUMBER 22-09

PROJECT: Fort Stewart USTs

INSPECTOR J. Celeste

SHEET 1 OF 1

ELEV (A)	DEPTH (B)	DESCRIPTION OF MATERIALS (C)	FIELD SCREENING RESULTS	GEOTECH SAMPLE OR CORE BOX	ANALYTICAL SAMPLE NO (F)	REMARKS (G)
		SAND W/ SILT (SP-SM), fine grained, soft (2.5 Y 4/2)				
	1	SAND (SW), fine to medium grained, some silt, very soft (2.5 Y 2.5/1)				
	2					
	3					
		NO RECOVERY				
	4					
		SAND (SW), fine to medium grained, some silt, very soft (2.5 Y 2.5/1)				
	5					
		SAND (SW), fine to medium grained, some silt, soft to very soft, moist to wet (2.5 Y 2.5/1)				
	6					
	7					
		NO RECOVERY				
	8					
						COLLECTED GROUNDWATER SAMPLE 220912 FROM MONITORING POINT
	9					
						DRILLED TO 9.5 FT BGS TO SET 3/4" MONITORING POINT SCREENED FROM 2.4 TO 9.4 FT BGS
	10					

BORING LOG

PAGE OF

BORING/WELL NO.: SB14	INSTALLATION: FORT STEWART GA	SITE: SWMU 39
PROJECT NO.: 114-113-007	CLIENT/PROJECT: US ARMY CORPS ENG. SAVANNA	
CONTRACTOR: STEP INC.	DRILLING CONTRACTOR: GEOTEK DRILLING CO.	
DRILLER: MARK HOLLOMB	BOREHOLE DIAMETER(S): 4"	
START - DATE: 4/14/04 TIME: 10:19	END - DATE: 4/14/04 TIME: 10:55	
DRILLING METHOD/RIG TYPE: HOLLOW STEM	COORDINATES: N E	
LOGGED BY: BURKE, ARTHUR	E-LOG (Y / N) FROM TO	PROTECTION LEVEL:

Depth (ft)	Sample	Sample No.	Off-site Lab (Y/N)	On-Site Lab (Y/N)	OVA Reading (ppm)	Headspace (ppm)	Recovery (ft/ft)	Lithologic Description	USCS	Blows/6 inch	Stratigraphic Log	Well Construction Data	Water Depth & Remarks	GS Elev. (ft)
0								0-1' CONCRETE.					CONCRETE	
					0 4'			1-4' SAND - BLACK FIRM	SN				BENTONITE SAND	
5'	X X		Y Y	N N	0			SAMPLES 04105001 5' 041050010 6' 4-8' SAND WET @ 5-6'	SN					
10'								SAND	SN					
A	B	C	D	E	F	G	H	I	J	K	L	M	N	O

U - Thin Wall Tube R - Rock Coring _____ On-Site G/C (Make/Model): _____
S - Split Spoon (tube) O - Other _____ G/C Operator: _____
C - Cuttings OVA Instrument (Make/Model): _____
Notes: _____

UCN-18899_FC (4-3-97)

BORING LOG

PAGE OF

BORING/WELL NO.: SB 15	INSTALLATION: FORT STEWART	SITE: SWMU 39
PROJECT NO.: 114-113-007	CLIENT/PROJECT: US ARMY CORPS ENG. SAVANNA	
CONTRACTOR: STEP Inc.	DRILLING CONTRACTOR: GEOTEK DRILLING Co.	
DRILLER: MARK HOLCOMB	BOREHOLE DIAMETER(S): 4"	
START - DATE: 4/14/04 TIME: 11:30	END - DATE: 4/14/04 TIME: 11:50	
DRILLING METHOD/RIG TYPE: HOLLOW STEM	COORDINATES: N E	
LOGGED BY: Burke ARTHUR	E-LOG (Y / N) FROM TO	PROTECTION LEVEL:

Depth (ft)	Sample	Sample No.	Off-site Lab (Y/N)	On-Site Lab (Y/N)	OVA Reading (ppm)	Headspace (ppm)	Recovery (ft/ft)	Lithologic Description	USCS	Blows/6 inch	Stratigraphic Log	Well Construction Data	Water Depth & Remarks	GS Elev. (ft)
0								0-1' CONCRETE					CONCRETE	
					O			1-4' SAND - BLACK MOIST @ 4'					BENTONITE	
5'	X		Y	N				SAMPLE 04105002 5'					SAND	
					O			4-8' SAND BLACK WET @ 5-6'						
10'								SAND						

A B C D E F G H I J K L M N O

U - Thin Wall Tube R - Rock Coring _____ On-Site G/C (Make/Model): _____
S - Split Spoon (tube) O - Other _____ G/C Operator: _____
C - Cuttings OVA Instrument (Make/Model): _____
Notes: _____

UCN-18899_FC (4-3-97)

BORING LOG

PAGE OF

BORING/WELL NO.: SB16	INSTALLATION: FORT STEWART GA	SITE: SWMU 39
PROJECT NO.: 114-113-007	CLIENT/PROJECT: US ARMY CORPS ENG. SAVANNA	
CONTRACTOR: STEP INC.	DRILLING CONTRACTOR: GEOTEK DRILLING CO.	
DRILLER: MARK HOLCOMB	BOREHOLE DIAMETER(S): 4"	
START - DATE: 4/14/04 TIME: 14:15	END - DATE: 4/14/04 TIME: 14:55	
DRILLING METHOD/RIG TYPE: HOLLOW STEM	COORDINATES: N E	
LOGGED BY: BURKE ARTHUR	E-LOG (Y / N) FROM TO	PROTECTION LEVEL:

Depth (ft)	Sample	Sample No.	Off-Site Lab (Y/N)	On-Site Lab (Y/N)	OVA Reading (ppm)	Headspace (ppm)	Recovery (ft/ft)	Lithologic Description	USCS	Blows/6 inch	Stratigraphic Log	Well Construction Data	Water Depth & Remarks	GS Elev. (ft)
0'														
					0			ORGANIC TO 6" BLACK SAND TO 3', BROWN SAND FOR NEXT 6" BLACK TO 4'					CONCRETE BENTONITE	
5'					0			4'-8' BLACK SAND MOIST @ 5'						
10'	X		Y	N	0			SAMPLE 04105003 9' SAND BLACK COARSE TO 9' FINE GRAINED TO 12'						
	A	B	C	D	E	F	G	H I	J	K	L	M	N	O

U - Thin Wall Tube
S - Split Spoon (tube)
C - Cuttings
R - Rock Coring
O - Other
OVA Instrument (Make/Model):
On-Site G/C (Make/Model):
G/C Operator:
Notes:

UCN-18899_FC (4-3-97)

BORING LOG

PAGE OF

BORING/WELL NO.: SB17	INSTALLATION: FORT STEWART GA	SITE: SWMU 39
PROJECT NO.: 114-113-007	CLIENT/PROJECT: US ARMY CORPS ENG. SAVANNA	
CONTRACTOR: STEP INC.	DRILLING CONTRACTOR: GEOTEK DRILLING CO.	
DRILLER: MARK HOLCOMB	BOREHOLE DIAMETER(S): 4"	
START - DATE: 4/14/04 TIME: 15:14	END - DATE: 4/14/04 TIME: 15:45	
DRILLING METHOD/RIG TYPE: HOLLOW STEM	COORDINATES: N E	
LOGGED BY: BURKE ARTHUR	E-LOG (Y / N) FROM TO	PROTECTION LEVEL:

Depth (ft)	Sample	Sample No.	Off-Site Lab (Y/N)	On-Site Lab (Y/N)	OVA Reading (ppm)	Headspace (ppm)	Recovery (ft/ft)	Lithologic Description	USCS	Blows/6 inch	Stratigraphic Log	Well Construction Data	Water Depth & Remarks	GS Elev. (ft)
0'														
					0			ORGANIC 0-6" BLACK FINE GRAIN SAND 6"-3' WHITE SAND 3'-4'	SN				CONCRETE BENTONITE	
5'					0			BLACK COARS SAND 4'-8'	SN				SAND	
10'	X		Y	N	9' @ 4			SAMPLE 04105004 9' WET @ 9' FINE GRAIN SAND 8'-12'	SN					
	A	B	C	D	E	F	G	H I	J	K	L	M	N	O

U - Thin Wall Tube
S - Split Spoon (tube)
C - Cuttings
R - Rock Coring
O - Other
OVA Instrument (Make/Model):
On-Site G/C (Make/Model):
G/C Operator:
Notes:

UCN-18899_FC (4-3-97)

BORING LOG

PAGE OF

BORING/WELL NO.: SB18	INSTALLATION: FORT STEWART GA	SITE: SWMU 39
PROJECT NO.: 114-113-007	CLIENT/PROJECT: US ARMY CORPS ENG. SAVANNA	
CONTRACTOR: STEP INC.	DRILLING CONTRACTOR: GEOTEK DRILLING CO.	
DRILLER: MARK HOLCOMB	BOREHOLE DIAMETER(S): 4"	
START - DATE: 4/15/04 TIME: 8:15	END - DATE: 4/15/04 TIME: 12:30	
DRILLING METHOD/RIG TYPE: HOLLOW STEM	COORDINATES: N E	
LOGGED BY: BURKE ARTHUR	E-LOG (Y / N) FROM TO	PROTECTION LEVEL:

Depth (ft)	Sample	Sample No.	Off-site Lab (Y/N)	On-Site Lab (Y/N)	OVA Reading (ppm)	Headspace (ppm)	Recovery (ft/ft)	Lithologic Description	USCS	Blows/6 inch	Stratigraphic Log	Well Construction Data	Water Depth & Remarks	GS Elev. (ft)
0'	X		Y	N	5' 400 4'			SAMPLE 04106U01 4' 0-1' CONCRETE 1'-4' BLACK SAND	SN				CONCRETE BENTONITE	
5'					25 @ 6' 50 @ 7'			4'-8' BLACK SAND VI WET	SN				SAND	
10'								SAND	SN					
								STOPPED @ 12'						

A B C D E F G H I J K L M N O

U - Thin Wall Tube
S - Split Spoon (tube)
C - Cuttings
R - Rock Coring _____
O - Other _____
OVA Instrument (Make/Model): _____
On-Site G/C (Make/Model): _____
G/C Operator: _____
Notes: _____

UCN-18899_FC (4-3-97)

BORING LOG

PAGE OF

BORING/WELL NO.: SB19	INSTALLATION: FORT STEWART GA	SITE: SWMU 39
PROJECT NO.: 114-113-007	CLIENT/PROJECT: US ARMY CORPS ENG. SAVANNA	
CONTRACTOR: STEP INC.	DRILLING CONTRACTOR: GEOTEK DRILLING CO	
DRILLER: MARK HOLCOMB	BOREHOLE DIAMETER(S): 4"	
START - DATE: 4/15/04 TIME: 12:30	END - DATE: 4/15/04 TIME: 14:45	
DRILLING METHOD/RIG TYPE: HOLLOW STEM	COORDINATES: N E	
LOGGED BY: BURKE, ARTHUR	E-LOG (Y / N) FROM TO	PROTECTION LEVEL:

Depth (ft)	Sample	Sample No.	Off-Site Lab (Y/N)	On-Site Lab (Y/N)	OVA Reading (ppm)	Headspace (ppm)	Recovery (ft/ft)	Lithologic Description	USCS	Blows/6 inch	Stratigraphic Log	Well Construction Data	Water Depth & Remarks	GS Elev. (ft)
0	X		Y	N	25 @ 1 500 @ 4'			0-1' CONCRETE SAMPLE 04106002 AND 04106003M @ 4' 1-4' BLACK FINE SAND	SN				CONCRETE BENTONITE	
5'					1000 @ 4' 500 @ 8'			4'-8' BLACK FINE SAND	SN				SAND	
0'								8'-12' BLACK SAND	SN					
								STOPPED @ 12'						

A B C D E F G H I J K L M N O

U - Thin Wall Tube
S - Split Spoon (tube)
C - Cuttings
R - Rock Coring _____
O - Other _____
OVA Instrument (Make/Model): _____
On-Site G/C (Make/Model): _____
G/C Operator: _____
Notes: _____

UCN-18899_FC (4-3-97)

BORING LOG

PAGE OF

BORING/WELL NO.: SB20	INSTALLATION: FORT STEWART GA	SITE: SWMU 39
PROJECT NO.: 114-113-007	CLIENT/PROJECT: US ARMY CORPS ENG. SAVANNA	
CONTRACTOR: STEP INC.	DRILLING CONTRACTOR: GEOTEK DRILLING CO	
DRILLER: MARK HOLCOMB	BOREHOLE DIAMETER(S): 21"	
START - DATE: 4/15/04 TIME: 14:45	END - DATE: 4/15/04 TIME: 15:00	
DRILLING METHOD/RIG TYPE: HOLLOW STEM	COORDINATES: N E	
LOGGED BY: BURKE ARTHUR	E-LOG (Y / N) FROM TO	PROTECTION LEVEL:

Depth (ft)	Sample	Sample No.	Off-site Lab (Y/N)	On-Site Lab (Y/N)	OVA Reading (ppm)	Headspace (ppm)	Recovery (ft/ft)	Lithologic Description	USCS	Blows/6 inch	Stratigraphic Log	Well Construction Data	Water Depth & Remarks	GS Elev. (ft)
0					50 @ 2'								CONCRETE	
					250 @ 4'			12" CONCRETE BLACK SAND-4'	SN				BENTONITE	
5'					200 @ 4'			SAMPLE 0416004 @ 7'					SAND	
	X		Y	N	2000 @ 7'			4'-8' BLACK SAND	SN					
10'								4'-12' BLACK SAND	SN					
								STOPPED @ 12'						

A B C D E F G H I J K L M N O

U - Thin Wall Tube
S - Split Spoon (tube)
C - Cuttings
R - Rock Coring _____
D - Other _____
OVA Instrument (Make/Model): _____
On-Site G/C (Make/Model): _____
G/C Operator: _____
Notes: _____

UCN-18899_FC (4-3-97)

BORING LOG

PAGE OF

BORING/WELL NO.: SB21	INSTALLATION: FORT STEWART GA	SITE: SWMU 39
PROJECT NO.: 114-113-007	CLIENT/PROJECT: US ARMY CORPS ENG. SAVANNA	
CONTRACTOR: STEP INC.	DRILLING CONTRACTOR: GEOTEK DRILLING CO	
DRILLER: MARK HOLCOMB	BOREHOLE DIAMETER(S): 4"	
START - DATE: 4/15/04 TIME: 15:34	END - DATE: 4/15/04 TIME: 16:00	
DRILLING METHOD/RIG TYPE: HOLLOW STEM	COORDINATES: N E	
LOGGED BY: BURKE ARTHUR	E-LOG (Y / N) FROM TO	PROTECTION LEVEL:

Depth (ft)	Sample	Sample No.	Off-site Lab (Y/N)	On-Site Lab (Y/N)	OVA Reading (ppm)	Headspace (ppm)	Recovery (ft/ft)	Lithologic Description	USCS	Blows/6 inch	Stratigraphic Log	Well Construction Data	Water Depth & Remarks	GS Elev. (ft)
0					2000 2' 3' 4'			12" OF CONCRETE FINE GRAIN SAND TO 3'	SN				CONCRETE BENTONITE	
5'	X		Y	N	3500 1500 500 7' 6' 4'			SAMPLE 04106U05 7' 4'-8' BLACK SAND	SN				SAND	
10'								8'-12' SAND	SN					
								STOPPED @ 12'						
A	B	C	D	E	F	G	H	I	J	K	L	M	N	O

U - Thin Wall Tube R - Rock Coring _____ On-Site G/C (Make/Model): _____
S - Split Spoon (tube) O - Other _____ G/C Operator: _____
C - Cuttings OVA Instrument (Make/Model): _____
Notes: _____

UCN-18899_FC (4-3-97)

BORING LOG

PAGE OF

BORING/WELL NO.: SB022	INSTALLATION: FORT STEWART GA	SITE: SWMU 39
PROJECT NO.: 114-113-007	CLIENT/PROJECT: US ARMY CORPS ENG. SAVANNA	
CONTRACTOR: STEP INC.	DRILLING CONTRACTOR: GEOTEK DRILLING CO	
DRILLER: MARK HOLLCOMB	BOREHOLE DIAMETER(S): 6 1/4"	
START - DATE: 8/28/04 TIME: 12:15	END - DATE: 8/28/04 TIME: 14:20	
DRILLING METHOD/RIG TYPE: HOLLOW STEM	COORDINATES: N E	
LOGGED BY: BURICE ARTHER	E-LOG (Y / N) FROM TO	PROTECTION LEVEL:

Depth (ft)	Sample	Sample No.	Off-site Lab (Y/N)	On-Site Lab (Y/N)	OVA Reading (ppm)	Headspace (ppm)	Recovery (ft/ft)	Lithologic Description	USCS	Blows/6 inch	Stratigraphic Log	Well Construction Data	Water Depth & Remarks	GS Elev. (ft)
0														
					1 @ 0-4'			BLACK SAND W/ORGANIC MAT. TOP 6"					CONCRETE	
													BENTONITE	
	X		Y	N				GRAY SAND 0.5'-3.5'	SN					
5'	XX		Y	N	2 @ 4-5'			SAMPLE 04239U01 4' 04239U02 5' 04239U020 5'					SAND	
								SAND - BLACK WET TO 6'	SN					
					1 @ 7'									
10'														
								SAND - BLACK	SN					
								WELL SET @ 13'						
15'														

A B C D E F G H I J K L M N O

U - Thin Wall Tube R - Rock Coring _____ On-Site G/C (Make/Model): _____
S - Split Spoon (tube) O - Other _____ G/C Operator: _____
C - Cuttings OVA Instrument (Make/Model): _____
Notes: _____

UCN-18899_FC (4-3-97)

BORING LOG

PAGE OF

BORING/WELL NO.: SB023	INSTALLATION: FORT STEWART GA	SITE: SWMU 39
PROJECT NO.: 114-113-007	CLIENT/PROJECT: US ARMY CORPS ENG SAVANNA	
CONTRACTOR: STEP INC	DRILLING CONTRACTOR:	
DRILLER:	BOREHOLE DIAMETER(S): 6 1/4"	
START - DATE: 8/27/04 TIME: 07:00	END - DATE: 8/27/04 TIME: 08:30	
DRILLING METHOD/RIG TYPE: HOLLOW STEM	COORDINATES: N E	
LOGGED BY: BURKE ARTHUR	E-LOG (Y / N) FROM TO	PROTECTION LEVEL:

Depth (ft)	Sample	Sample No.	Off-Site Lab (Y/N)	On-Site Lab (Y/N)	OVA Reading (ppm)	Headspace (ppm)	Recovery (ft/ft)	Lithologic Description	USCS	Blows/6 inch	Stratigraphic Log	Well Construction Data	Water Depth & Remarks	GS Elev. (ft)
0					0		100%	SAND - GRAY WELL SORTED	SN				CONCRETE	
			Y	N	0		75%	SAMPLE 04240401 3' SAND - BROWN FINE GRAINED	SN				BENTONITE	
5'			Y	N	0			SAMPLE 04240402 5' 04240403m 5' SAND - BROWN	SN				SAND	
10'														
15'								SAND - BROWN	SN					
								WELL SET @ 15'						
A	B	C	D	E	F	G	H	I	J	K	L	M	N	O

U - Thin Wall Tube
S - Split Spoon (tube)
C - Cuttings
R - Rock Coring _____
O - Other _____
OVA Instrument (Make/Model): _____
On-Site G/C (Make/Model): _____
G/C Operator: _____
Notes: _____

UCN-18899_FC (4-3-97)

BORING LOG

PAGE OF

BORING/WELL NO.: SB024	INSTALLATION: FORT STEWART GA	SITE: SWMU 39
PROJECT NO.: 114-113-007	CLIENT/PROJECT: US ARMY CORPS ENG SAVANNA	
CONTRACTOR: STEP INC	DRILLING CONTRACTOR:	
DRILLER:	BOREHOLE DIAMETER(S): 6 1/4"	
START - DATE: 8/27/04 TIME: 11:00	END - DATE: 8/27/04 TIME: 12:00	
DRILLING METHOD/RIG TYPE: HOLLOW STEM	COORDINATES: N E	
LOGGED BY: DOUG HAWN	E-LOG (Y / N) FROM TO	PROTECTION LEVEL:

Depth (ft)	Sample	Sample No.	Off-Site Lab (Y/N)	On-Site Lab (Y/N)	OVA Reading (ppm)	Headspace (ppm)	Recovery (ft/ft)	Lithologic Description	USCS	Blows/6 inch	Stratigraphic Log	Well Construction Data	Water Depth & Remarks	GS Elev. (ft)
0														
					0		75%	SAND - GRAY	SW				CONCRETE	
					0		80%	SAND - GRAY FINE GRAIN	SN				BENTONITE	
5'		Y	N		0		70%	SAMPLE 04240U04 4'-6'						
								SAND - DARK BROWN FINE GRAIN	SN				SAND	
								SAND - DARK BROWN - BLACK	SN					
10'		Y	N				60%	SAMPLE 04240U05 8-10'						
								VERY DARK BROWN WET 8-10'	SN					
15								SAND	SN					
								SET WELL @ 15'						

A B C D E F G H I J K L M N O

U - Thin Wall Tube
S - Split Spoon (tube)
C - Cuttings
R - Rock Coring
O - Other
OVA Instrument (Make/Model):
On-Site G/C (Make/Model):
G/C Operator:
Notes:

UCN-16899_FC (4-3-97)

BORING LOG

BORING/WELL NO.: SB025	INSTALLATION: FORT STEWART GA		SITE: SWMU 39
PROJECT NO.: 114-113-007		CLIENT/PROJECT: US ARMY CORPS ENG SAVANNA	
CONTRACTOR: STEP INC		DRILLING CONTRACTOR:	
DRILLER:		BOREHOLE DIAMETER(S):	
START - DATE: 8/27/04	TIME: 13:40	END - DATE: 8/27/04	TIME: 14:20
DRILLING METHOD/RIG TYPE: HOLLOW STEM		COORDINATES: N	E
LOGGED BY: DOUG HAWN	E-LOG (Y / N) FROM TO	PROTECTION LEVEL:	

PAGE OF

Depth (ft)	Sample	Sample No.	Off-site Lab (Y/N)	On-Site Lab (Y/N)	OVA Reading (ppm)	Headspace (ppm)	Recovery (ft/ft)	Lithologic Description	USCS	Blows/6 inch	Stratigraphic Log	Well Construction Data	Water Depth & Remarks	GS Elev. (ft)
0														
					–		90%	SAND - FINE - BROWN	S.				CONCRETE BENTONITE	
					–		20%	SAND - FINE	S.					
5'		Y	N		–		20%	SAMPLE 04240406 4-6' SAND - BROWN - FINE	S.				SAND	
					–		60%	SAND - BROWN - GRITTY	S.P					
					–		100%	SAMPLE 04240407 8-10' SAND - REDISH BROWN	S					
10'								SAND	S					
								WELL SET @ 13'						
15'														

A B C D E F G H I J K L M N O

U - Thin Wall Tube
S - Split Spoon (tube)
C - Cuttings
R - Rock Coring
O - Other
OVA Instrument (Make/Model):
On-Site G/C (Make/Model):
G/C Operator:
Notes:

UCN-18899_FC (4-3-97)

ARCADIS

SOIL CORE / SAMPLING LOG

Boring/Well F39-TW-01 Project/No. GP09HAFS.F39A.DG0FI Page 1 of 1

Site Location: Fort Stewart, Georgia
Drilling Started: 3/17/2010 Drilling Completed: 3/17/2010

Drilling Contractor: ARM Driller: Josh Register Helper: Van Chisholm

Drilling Fluid Used: None Drilling Method: Direct Push

Length and Diameter of Coring Device: 5 Feet Length, 1.5 Inch Diameter Sampling Interval: Continuous

Total Depth Drilled: 45 Feet Hole Diameter: 2" Coring Device: MacroCore

Prepared By: Robby Shealy Hammer Weight: N/A Hammer Drop: N/A ins.

Soil Characterization:

Sample/Core Depth (Feet bls) From	To	Sample/Core Description
0.0	2.5	Very fine to fine sand, trace silt, trace organics, dark brown, moist
2.5	3.5	Very fine to fine sand, trace silt, trace organics, dark brown, moist, some large subangular pebbles
3.5	4.5	Very fine to fine sand, trace silt, dark gray to black, well sorted, wet at four feet
4.5	11.0	Fine to coarse sand, trace silt, dark brown, poorly sorted
11.0	15.0	Very fine to fine sand, trace silt, well sorted, brown
15.0	21.0	Very fine to fine sand, trace medium sand, trace silt, light brown, poorly sorted
21.0	23.0	Very fine to fine sand, trace silt, tan
23.0	26.0	Very fine to fine sand, trace clay, trace silt, gray to tan
26.0	29.0	Very fine to fine sand, trace silt, well sorted, tan
29.0	38.0	Very fine to fine sand, trace silt, trace clay, gray
38.0	44.0	Medium to coarse sand, trace fine sand and silt, poorly sorted, gray
44.0	45.0	Clay with fine to coarse sand and pebbles, trace small to medium shell fragments, gray

ARCADIS

Sample/Core Log

Boring/Well F39TW01 Project/No. GP09HAFS.F39A.DG0FI Page 1 of 2

Site Location SWMU 39 Hunter Stewart Drilling Started 3/17/10 Drilling Completed 3/17/10

Total Depth Drilled 45 Feet Hole Diameter 2 inches Type of Sample/Coring Device ~~Dual Tubes~~ GeoProbe

Length and Diameter of Coring Device 5' Sampling Interval ____ feet

Land-Surface Elev. ____ feet ☐ Surveyed ☐ Estimated Datum ____

Drilling Fluid Used None Drilling Method MacroCore

Drilling Contractor ARM Driller Josh Register Helper Van

Prepared By Robby Shealy Hammer Weight ____ Hammer Drop ____ ins.

Sample/Core Depth (feet below land surface) From	To	Core Recovery (inches)	PID Reading (ppm)	Sample/Core Description
0	5	Hand Auger	1 (0.0)	0'-2.5' - Sand Fine - V. Fine, trace silt, trace
			2 (0.0)	organics, dark brown, moist
			3 (0.0)	
			4 (0.0)	2.5'-3.5' - Same as 0-2.5' w/ some large pebbles
			5 (0.0)	looks like road rock, subangular
			6 (0.0)	
			7 (0.0)	3.5'-4.5' - Sand Fine - V Fine, trace silt, dark grey - black
			8 (0.0)	well sorted Water @ 4'
			9 (0.0)	
5	10	54"	10 (0.0)	4.5'-11' Sand Coarse - Fine, trace silt, dark brown, wet
			11 (0.0)	poorly sorted
			12 (0.0)	
			13 (0.0)	11'-15' Sand Fine - V. Fine, trace silt, well sorted, moist
			14 (0.0)	brown
10	15	55	15 (0.0)	
			16 (0.0)	15'-21 Sand Fine - V. Fine, trace red sand, trace silt
			17 (0.0)	wet, light brown, poorly sorted
			18 (0.0)	
			19 (0.0)	21'-23' Sand Fine - V. Fine, trace silt, wet, tan
15	20	56	20 (0.0)	
			21 (0.0)	23'-26' Sand Fine - V. Fine, trace clay, trace silt, wet
			22 (0.0)	Gray/tan
			23 (0.0)	
			24 (0.0)	
20	25	48	25 (0.0)	

ARCADIS

Sample/Core Log (Cont.d)

Boring/Well F39TW01

Prepared by R. Sleeh

Sample/Core Depth (feet below land surface) From	To	Core Recovery (inches)	PID Reading (ppm)	Sample/Core Description
25	30	35	26 (0.0)	26'-29' - Sand Fine - V. Fine, trace silt, well sorted
			27 (0.0)	wet, tan
			28 (0.0)	
			29 (0.0)	29'-38' Sand Fine - V. Fine, trace silt, trace clay
			30 (0.0)	grey
			31 (0.0)	
30	35	16	32 (0.0)	38'-44' Sand Coarse - Med, trace Fine sand/silt, wet
			33 (0.0)	grey, poorly sorted
			34 (0.0)	
			35 (0.0)	44-45' Clay with Sand Coarse - Fine and Pebbles small-med
			36 (0.0)	trace shell fragments, wet, grey
35	40	15	37 (0.0)	
			38 (0.0)	
			39 (0.0)	
			40 (0.0)	
40	45	10	41 (0.0)	
			42 (0.0)	
			43 (0.0)	
			44 (0.0)	
			45 (0.0)	

ARCADIS

SOIL CORE / SAMPLING LOG

Boring/Well F39-TW-02 Project/No. GP09HAFS.F39A.DG0FI Page 1 of 1

Site Location: Fort Stewart, Georgia
Drilling Started: 3/25/2010 Drilling Completed: 3/25/2010

Drilling Contractor: ARM Driller: Josh Register Helper: Van Chisholm

Drilling Fluid Used: None Drilling Method: Direct Push

Length and Diameter of Coring Device: 5 Feet Length, 1.5 Inch Diameter Sampling Interval: Continuous

Total Depth Drilled: 95 Feet Hole Diameter: 2" Coring Device: MacroCore

Prepared By: Robby Shealy Hammer Weight: N/A Hammer Drop: N/A ins.

Soil Characterization:

Sample/Core Depth (Feet bls) From	To	Sample/Core Description
0.0	1.0	Gravel fill, poorly sorted subangular sand and gravel pebbles
1.0	16.0	Very fine to fine sand trace silt, gray to dark brown to reddish brown, wet at five feet
16.0	18.5	Very fine to coarse sand, trace well rounded pebbles, trace silt, poorly sorted, reddish brown
18.5	20.0	Very fine to fine sand, trace coarse sand, trace silt, reddish brown
20.0	22.0	Fine to coarse sand, trace small subangular pebbles, poorly sorted, reddish brown
22.0	26.0	Very fine to fine sand, trace silt, trace coarse sand, brown
26.0	28.0	Very fine to fine sand, trace silt, trace coarse sand, trace small subrounded pebbles, brown
28.0	33.5	Very fine to fine sand, trace silt, trace coarse sand light gray
33.5	35.0	Soft high plasticity clay, gray
35.0	45.0	Very fine to medium sand, trace silt, trace clay, bluish gray, grades to coarser sand with depth
45.0	54.5	Fine to coarse sand, trace clay, trace small pebbles, bluish gray
54.5	60.5	Silt, trace fine sand, trace clay, light gray, stiff
60.5	78.0	Silt, trace very fine sand, trace clay, green, stiff
78.0	80.0	Silt, some clay, trace very fine sand, green, stiff
80.0	81.0	Coarse to very coarse sand, some clay, gray
81.0	83.0	Coarse sand, trace fines, well sorted, gray
83.0	86.0	Coarse to very coarse sand, some poorly sorted well rounded pebbles, trace clay
86.0	92.0	Coarse well sorted sand, trace clay, gray
92.0	95.0	Medium to very coarse sand, some poorly sorted well rounded pebbles, trace clay

ARCADIS

Sample/Core Log

Boring/Well F39TW02 Project/No. GP09HAFS.F39A.DG0FI Page 1 of ~~3~~ 4

Site Location SWMU 39 Hunter Stewart Drilling Started 3/25/10 Drilling Completed 3/25/10

Total Depth Drilled _____ Feet Hole Diameter 2 inches Type of Sample/Coring Device ~~Dual Tube~~s GeoProbe

Length and Diameter of Coring Device 5' Sampling Interval 5 feet

Land-Surface Elev. _____ feet ☐ Surveyed ☐ Estimated Datum _____

Drilling Fluid Used None Drilling Method MacroCore

Drilling Contractor ARM Driller Josh Register Helper Van

Prepared By Robby Shealy Hammer Weight _____ Hammer Drop _____ ins.

Sample/Core Depth (feet below land surface) From	To	Core Recovery (inches)	PID Reading (ppm)	Sample/Core Description
0	5		1 (0.0)	0-5 - Hand Augered
			2 (0.0)	0-1 - Gravel for road. Sand and gravel pebbles, subangular
			3 (0.0)	small-large. Hard to hand auger
			4 (0.0)	
			5 (0.0)	1-16 Sand Fine - V.Fine, trace silt, moist,
5	10	49	6 (0.0)	grey → dark brown → reddish brown → brown → dark brown
			7 (0.0)	w/t @ ~5', post 5' → wet
			8 (0.0)	
			9 (0.0)	16-18.5 Sand Coarse - V.Fine, trace round small pebble,
			10 (0.0)	trace silt, poorly sorted, wet, reddish brown
10	15	45	11 (0.0)	
			12 (0.0)	18.5-20 Sand Fine - V.Fine, trace coarse sand, trace
			13 (0.0)	silt, wet, reddish brown
			14 (0.0)	
			15 (0.0)	20-22 Sand Coarse - Fine, trace small sub angular pebble,
15	20	51	16 (0.0)	poorly sorted, wet, reddish brown
			17 (0.0)	
			18 (0.0)	22-26 Sand Fine - V.Fine, trace silt, trace coarse
			19 (0.0)	sand, wet, brown
			20 (0.0)	
20	25	52	21 (0.0)	26-28 Sand Fine - V.Fine, trace silt, trace coarse
			22 (0.0)	sand, trace small sub rounded pebble, moist, brown
			23 (0.0)	
			24 (0.0)	28-33.5 Sand Fine - V.Fine, trace silt, trace coarse sand
			25 (0.0)	light grey, moist - wet

ARCADIS

Sample/Core Log (Cont.d)

Boring/Well: F39TW02

Prepared by: R. Sleeh

Sample/Core Depth (feet below land surface) From	To	Core Recovery (inches)	PID Reading (ppm)	Sample/Core Description
25	30	50	26 (0.0)	33.5'-35 Clay, high plasticity, soft, moist, grey
			27 (0.0)	
			28 (0.0)	35-45 Sand Med-V.Fine, trace silt, trace clay, wet
			29 (0.0)	bluish grey. More coarse sand as go deeper
			30 (0.0)	
30	35	24	31 (0.0)	45-54.5 Sand Coarse-Fine, trace clay, trace small pebble,
			32 (0.0)	wet, bluish grey
			33 (0.0)	
			34 (0.0)	54.5'-60.5' Silt, Trace fine sand, trace clay, light grey, moist
			35 (0.0)	stiff
35	40	8	36 (0.0)	
			37 (0.0)	60.5'-78 Silt, trace V.Fine sand, + trace clay, green, moist
			38 (0.0)	stiff, wet @ 75'-78'
			39 (0.0)	
			40 (0.0)	78'-80' Silt w some clay, trace V. Fine sand, green, moist
			41 (0.0)	stiff
40	45	6	42 (0.0)	
			43 (0.0)	80'-81' V.Coarse-Coarse sand w/ some clay, wet, grey
			44 (0.0)	
			45 (0.0)	81'-83' - Coarse sand, trace fines, well sorted, wet, grey
45	50	5	46 (0.0)	
			47 (0.0)	83'-86' Sand V. Coarse-Coarse w/ some pebbles Large-Small
			48 (0.0)	rounded, trace clay
			49 (0.0)	
			50 (0.0)	86'-92' Sand Coarse, well sorted, wet, trace clay, grey
50	55	5	51 (0.0)	
			52 (0.0)	92'-95 Sand V.Coarse-Med w/some pebbles Large-Small
			53 (0.0)	Rounded, trace clay

ARCADIS

Sample/Core Log (Cont.d)

Boring/Well F39TW02

Prepared by R. Sleaf

Sample/Core Depth (feet below land surface) From	To	Core Recovery (inches)	PID Reading (ppm)	Sample/Core Description
			54 (0.0)	
			55 (0.0)	
55	60	44	56 (0.0)	
			57 (0.0)	
			58 (0.0)	
			59 (0.0)	
			60 (0.0)	
60	65	53	61 (0.0)	
			62 (0.0)	
			63 (0.0)	
			64 (0.0)	
			65 (0.0)	
65	70	46	66 (0.0)	
			67 (0.0)	
			68 (0.0)	
			69 (0.0)	
			70 (0.0)	
70	75	57	71 (0.0)	
			72 (0.0)	
			73 (0.0)	
			74 (0.0)	
			75 (0.0)	
75	80	47	76 (0.0)	
			77 (0.0)	
			78 (0.0)	
			79 (0.0)	
			80 (0.0)	
			81 (0.0)	

ARCADIS

Sample/Core Log (Cont.d)

Boring/Well F39TW02

Prepared by R. Sluh

Sample/Core Depth (feet below land surface) From	To	Core Recovery (inches)	PID Reading (ppm)	Sample/Core Description
80	85	54	82 (0.0)	
			83 (0.0)	
			84 (0.0)	
			85 (0.0)	
			86 (0.0)	
			87 (0.0)	
85	90	55	88 (0.0)	
			89 (0.0)	
			90 (0.0)	
			91 (0.0)	
90	95	55	92 (0.0)	
			93 (0.0)	
			94 (0.0)	
			95 (0.0)	

ARCADIS

SOIL CORE / SAMPLING LOG

Boring/Well F39-TW-03 Project/No. GP09HAFS.F39A.DG0FI Page 1 of 1

Site Location: Fort Stewart, Georgia
Drilling Started: 3/29/2010 Drilling Completed: 3/29/2010

Drilling Contractor: ARM Driller: Josh Register Helper: Van Chisholm

Drilling Fluid Used: None Drilling Method: Direct Push

Length and Diameter of Coring Device: 5 Feet Length, 1.5 Inch Diameter Sampling Interval: Continuous

Total Depth Drilled: 45 Feet Hole Diameter: 2" Coring Device: MacroCore

Prepared By: Robby Shealy Hammer Weight: N/A Hammer Drop: N/A ins.

Soil Characterization:

Sample/Core Depth (Feet bls) From	To	Sample/Core Description
0.0	1.0	Fine to coarse sand, some poorly sorted subangular pebbles, trace coal, dark brown to black
1.0	2.0	Very fine to fine sand, trace silt, light gray, soft
2.0	4.0	Very fine to fine sand, trace silt, tan to brown, soft
4.0	6.0	Very fine to fine sand, trace silt, dark brown, soft
6.0	9.0	Very fine sand, some silt, black, soft
9.0	13.0	Very fine to very coarse sand, trace silt, dark brown, soft
13.0	16.0	Very fine to fine sand, trace silt, brown, soft
16.0	19.5	Fine to medium sand, trace coarse sand, trace silt, brown, soft
19.5	29.0	Very fine to fine sand, trace silt, brown, soft
29.0	39.5	Very fine to fine sand, trace silt, gray to tan, soft
39.5	42.0	Very fine to fine sand, trace medium sand, trace clay, trace silt, gray, soft
42.0	45.0	Fine to coarse sand, trace silt, gray, soft

ARCADIS

Sample/Core Log

Boring/Well F39TW03 Project/No. GP09HAFS.F39A.DG0FI Page 1 of 2

Site Location: Hunter Stewart SWMU-39 Drilling Started: 3/29/10 Drilling Completed: 3/29/10

Total Depth Drilled: 45 Feet Hole Diamete: 2" inches Type of Sample/ Coring Device: GeoProbe

Length and Diameter of Coring Device: 5' length, 1.5" core Sampling Interval: 5 feet

Land-Surface Elev. ____ feet ☐ Surveyed ☐ Estimated Datum ____

Drilling Fluid Used: None Drilling Method ____

Drilling Contractor: ARM Driller: Josh Register Helper: Van

Prepared By: Robby Shealy Hammer Weight ____ Hammer Drop ____ ins.

Sample/Core Depth (feet below land surface) From	To	Core Recovery (inches)	PID Reading (ppm)	Sample/Core Description
0	5		1 (0.0)	Hand Augered 0-5'
			2 (0.0)	0'-1' - Sand Coarse - Fine w/ Some pebbles
			3 (0.0)	subangular small - large, trace coal, moist
			4 (0.0)	dark brown - black
			5 (0.0)	
5	10	48	6 (0.0)	1'-2' Sand Fine - V. Fine, trace silt, moist
			7 (0.0)	light gray, soft
			8 (0.0)	
			9 (0.0)	2'-4' Sand Fine - V. Fine, trace silt, moist
			10 (0.0)	tan - brown, soft
10	15	57	11 (0.0)	
			12 (0.0)	4'-6' Sand Fine - V. Fine, trace silt, moist
			13 (0.0)	dark brown, soft
			14 (0.0)	
			15 (0.0)	6'-9' Sand V. Fine w/ Some silt, moist, black, soft
15	20	44	16 (0.0)	
			17 (0.0)	9'-13' Sand V. Coarse - V. Fine, trace silt, wet
			18 (0.0)	dark brown, soft
			19 (0.0)	
			20 (0.0)	13'-16' Sand Fine - V. Fine, trace silt, wet, brown, soft
20	25	40	21 (0.0)	
			22 (0.0)	16'-19.5' Sand Med - Fine, trace Coarse sand, trace
			23 (0.0)	silt, wet, brown, soft
			24 (0.0)	
			25 (0.0)	19.5'-29' Sand Fine - V Fine, trace silt, wet, brown, soft

ARCADIS

Sample/Core Log (Cont.d)

Boring/Well F39TW03

Prepared by R. Skeady

Sample/Core Depth (feet below land surface) From	To	Core Recovery (inches)	PID Reading (ppm)	Sample/Core Description
25	30	55	26 (0.0)	29'-39.5' Sand Fine - V. Fine, trace silt, wet
			27 (0.0)	grey/tan, soft
			28 (0.0)	
			29 (0.0)	39.5'-42 Sand Fine - V. Fine, trace med sand, trace
			30 (0.0)	clay/silt, wet, grey, soft
30	35	41	31 (0.0)	
			32 (0.0)	42'-45 Sand Coarse - Fine, trace silt, wet, grey
			33 (0.0)	soft
			34 (0.0)	
			35 (0.0)	
35	40	14	36 (0.0)	
			37 (0.0)	
			38 (0.0)	
			39 (0.0)	
			40 (0.0)	
40	45	14	41 (0.0)	
			42 (0.0)	
			43 (0.0)	
			44 (0.0)	
			45 (0.0)	

ARCADIS

SOIL CORE / SAMPLING LOG

Boring/Well F39-TW-04 Project/No. GP09HAFS.F39A.DG0FI Page 1 of 1

Site Location: Fort Stewart, Georgia
Drilling Started: 3/31/2010 Drilling Completed: 3/31/2010

Drilling Contractor: ARM Driller: Josh Register Helper: Van Chisholm

Drilling Fluid Used: None Drilling Method: Direct Push

Length and Diameter of Coring Device: 5 Feet Length, 1.5 Inch Diameter Sampling Interval: Continuous

Total Depth Drilled: 45 Feet Hole Diameter: 2" Coring Device: MacroCore

Prepared By: Robby Shealy Hammer Weight: N/A Hammer Drop: N/A ins.

Soil Characterization:

Sample/Core Depth (Feet bls) From	To	Sample/Core Description
0.0	3.0	Very fine to fine sand, trace silt, soft, gray to tan
3.0	11.0	Very fine sand, some silt, soft, dark brown to black
11.0	13.0	Fine to very coarse sand, trace silt, soft to medium stiff, dark brown
13.0	25.0	Very fine sand, some silt, soft, brown
25.0	28.0	Very fine sand and silt, soft, tan
28.0	39.0	Very fine sand and silt, trace clay, soft, tan to gray
39.0	45.0	Very fine sand, some silt, trace clay, trace coarse to very coarse sand, soft, gray, sand becomes more
		coarse with depth

ARCADIS

Sample/Core Log

Boring/Well F39TW04 Project/No. GP09HAFS.F39A.DG0FI Page 1 of 2

Site Location: Hunter Stewart SWMU-39 Drilling Started: 3/31/10 Drilling Completed: 3/31/10

Total Depth Drilled: 45 Feet Hole Diamete: 2" inches Type of Sample/Coring Device: GeoProbe

Length and Diameter of Coring Device: 5' length, 1.5" core Sampling Interval: 5 feet

Land-Surface Elev. ____ feet ☐ Surveyed ☐ Estimated Datum ____

Drilling Fluid Used: None Drilling Method: 2" Coring w/ Geoprobe

Drilling Contractor: ARM Driller: Josh Register Helper: Van

Prepared By: Robby Shealy Hammer Weight ____ Hammer Drop ____ ins.

Sample/Core Depth (feet below land surface) From	To	Core Recovery (inches)	PID Reading (ppm)	Sample/Core Description
0	5		1 (0.0)	Hand Augered
			2 (0.0)	0-3 - Sand Fine - V. Fine, trace silt, moist, soft
			3 (0.0)	0-1.5' grey, 1.5'-3 tan Water @ 3'
			4 (0.0)	
			5 (0.0)	3'-11' Sand V. Fine w/ some silt, wet, soft
5	10	34	6 (0.0)	dark brown - black
			7 (0.0)	
			8 (0.0)	11'-13' Sand V. Coarse - Fine, trace silt, wet, med stiff-soft
			9 (0.0)	dark brown, wet
			10 (0.0)	
10	15	37	11 (0.0)	13'-25' Sand V. Fine w/ some silt, soft, moist,
			12 (0.0)	brown
			13 (0.0)	
			14 (0.0)	25'-28' Sand V. Fine and silt, soft, wet
			15 (0.0)	tan
15	20	33	16 (0.0)	
			17 (0.0)	28'-39' Sand V. Fine and silt, trace clay, soft
			18 (0.0)	wet, tan/grey
			19 (0.0)	
			20 (0.0)	39'-45' Sand V. Fine w/ some silt, trace clay, trace
20	25	44	21 (0.0)	Coarse-V. Coarse Sand, soft, wet, grey
			22 (0.0)	More Coarse sand on bottom
			23 (0.0)	
			24 (0.0)	
			25 (0.0)	

ARCADIS

Sample/Core Log (Cont.d)

Boring/Well F39TW04

Prepared by Ruby Sheah

Sample/Core Depth (feet below land surface) From	To	Core Recovery (inches)	PID Reading (ppm)	Sample/Core Description
25	30	? 48 ?	26 (0.0)	
			27 (0.0)	
			28 (0.0)	
			29 (0.0)	
			30 (0.0)	
30	35	14	31 (0.0)	
			32 (0.0)	
			33 (0.0)	
			34 (0.0)	
			35 (0.0)	
35	40	17	36 (0.0)	
			37 (0.0)	
			38 (0.0)	
			39 (0.0)	
			40 (0.0)	
40	45	14	41 (0.0)	
			42 (0.0)	
			43 (0.0)	
			44 (0.0)	
			45 (0.0)	

ARCADIS

SOIL CORE / SAMPLING LOG

Boring/Well F39-TW-05 Project/No. GP09HAFS.F39A.DG0FI Page 1 of 1

Site Location: Fort Stewart, Georgia
Drilling Started: 4/5/2010 Drilling Completed: 4/5/2010

Drilling Contractor: ARM Driller: Josh Register Helper: Van Chisholm

Drilling Fluid Used: None Drilling Method: Direct Push

Length and Diameter of Coring Device: 5 Feet Length, 1.5 Inch Diameter Sampling Interval: Continuous

Total Depth Drilled: 45 Feet Hole Diameter: 2" Coring Device: MacroCore

Prepared By: Josh Frizzell Hammer Weight: N/A Hammer Drop: N/A ins.

Soil Characterization:

Sample/Core Depth (Feet bls) From	To	Sample/Core Description
0.0	1.0	10YR3/1 very dark gray silty well sorted fine sand
1.0	3.0	10YR7/3 very pale brown silty well sorted fine sand
3.0	10.0	10YR3/1 very dark gray silty well sorted fine sand, roots, wet at seven feet
10.0	18.0	10YR3/1 very dark gray silty well sorted fine sand
18.0	22.0	10YR4/6 dark yellowish brown clayey well sorted fine sand, slight plasticity
22.0	37.0	7.5YR4/6 strong brown silty well sorted fine sand
37.0	39.0	10YR6/4 light yellowish brown clayey well sorted fine sand, slight plasticity
39.0	45.0	10YR6/2 light brownish gray silty to clayey well sorted fine sand

ARCADIS

Borehole and Well Construction Log

Project: FST-39
Project No. GP09HAFS.F39A.DG6F1

Page 1 of 2
Site Location Ft. Stewart, Gd

Well ID F39 TW05
Date Begin 4-5-10
Date End

Contractor/Driller ARM
Rig Type Geoprobe
Method DPT

Total Depth Drilled 45
Sample Method/Size DPT
Cutting Disposal Drum

Well Construction Log

Boring Dia. 2

Time
Begin:
End:

Construction

Intervals (ft BGS)
Riser:
Screen:
Surf. Seal:
Seal:
Filter Pack:
Backfill:

Materials
Riser:
Screen:
Surf. Seal:
Seal:
Filter Pack:
Backfill:

Surface Completion
Protection:
Pad:
Lock:
Date/Time:

ARCADIS G&M Personel
Field Work: JDF
Log Draft:

Symbols
Grout:
Bentonite:
Sand:
Gravel:
Backfill: X

Contact:
Implied or Gradational Contact:

Depth (ft)	Spl Run	Class	Borehole Log Description	Ft. Rec.	Blow Count	PID (ppm)
			Time Begin: 1145 End:			
0			Grass surface			
			10YR3/1 silty well sorted fine sand (very dark gray)			0.0
1			10YR7/3 very pale brown silty well sorted fine sand			
2						
3			10YR3/1 very dark gray silty well sorted fine sand, roots			0.0
4						
5						0.0
6						
7			wet @ 7'			0.0
8						0.0
9						
10			10YR3/1 very dark gray silty well sorted fine sand			
11						0.0
12						0.0
13						
14						0.0
15						
16						0.0
17						
18			10YR4/6 dark yellowish brown clayey well sorted fine sand, slight plasticity			0.0
19						
20						0.0
21						
22			7.5YR4/6 strong brown silty well sorted fine sand			0.0
23						
24						0.0
25						

ARCADIS

Borehole and Well Construction Log

Project: FST-39
Project No.: GP69HAFS.F39A.D6-0F1
Page 2 of 2
Site Location: Ft. Stewart, GA

Well ID: F39 TW05
Date Begin: 4-5-10
Date End:
Contractor/Driller: ARM
Rig Type: Geoprobe
Method: DPT
Total Depth Drilled: 45
Sample Method/Size: DPT
Cutting Disposal: Drum

Well Construction Log

Boring Dia: "

Time
Begin:
End:

Construction

Intervals (ft BGS)
Riser:
Screen:
Surf. Seal:
Seal:
Filter Pack:
Backfill:

Materials
Riser:
Screen:
Surf. Seal:
Seal:
Filter Pack: 20-30 sand
Backfill: N/A

Surface Completion
Protection:
Pad:
Lock:
Date/Time:

ARCADIS G&M Personel
Field Work: JDF
Log Draft:

Symbols
Grout:
Bentonite:
Sand:
Gravel:
Backfill: X
Contact:
Implied or Gradational Contact:

Borehole Log

Time Begin: 1145
End:

Depth (ft)	Spl Run	Class	Description	Ft. Rec.	Blow Count	PID (ppm)
25						0.0
26						0.0
27						
28						0.0
29						
30						0.0
31						
32						0.0
33						
34						0.0
35						
36						0.0
37			10YR 6/4 light yellowish brown clayey well sorted fine sand, slight plasticity			
38						0.0
39			10YR 6/2 light brownish gray silty to clayey well sorted fine sand			
40						0.0
41						
42						0.0
43						
44						0.0
45			- END OF BORING -			0.0
46						
47						
48						
49						
50						

ARCADIS

SOIL CORE / SAMPLING LOG

Boring/Well F39-TW-06 Project/No. GP09HAFS.F39A.DG0FI Page 1 of 1

Site Location: Fort Stewart, Georgia
Drilling Started: 4/6/2010 Drilling Completed: 4/6/2010

Drilling Contractor: ARM Driller: Josh Register Helper: Van Chisholm

Drilling Fluid Used: None Drilling Method: Direct Push

Length and Diameter of Coring Device: 5 Feet Length, 1.5 Inch Diameter Sampling Interval: Continuous

Total Depth Drilled: 45 Feet Hole Diameter: 2" Coring Device: MacroCore

Prepared By: Josh Frizzell Hammer Weight: N/A Hammer Drop: N/A ins.

Soil Characterization:

Sample/Core Depth (Feet bls) From	To	Sample/Core Description
0.0	1.0	10YR5/4 yellowish brown silty well sorted fine sand
1.0	2.0	10YR7/2 light gray silty well sorted fine sand
2.0	6.0	10YR3/1 very dark gray silty well sorted fine sand
6.0	12.0	10YR3/2 very dark grayish brown silty well sorted fine sand, wet
12.0	19.0	7.5YR4/6 strong brown silty well sorted fine sand, two inch thick lens of 7.5YR4/6 strong brown poorly
		sorted well rounded sand and pebbles up to 1/4 inch diameter at 18 feet
19.0	32.0	7.5YR4/6 strong brown silty well sorted fine sand, grades to 7.5YR7/6 reddish yellow silty well sorted fine
		sand
32.0	38.0	10YR7/2 light gray silty well sorted fine sand, one inch thick lens of 10YR4/3 brown silty well sorted fine
		sand at 34 feet
38.0	40.0	10YR6/1 gray interbedded medium firm high plasticity clay and clayey well sorted fine sand
40.0	45.0	10YR6/1 gray clayey well sorted medium sand, slight plasticity

ARCADIS

Borehole and Well Construction Log

Project: FST-39

Project No. GA91KAFS. F39A. DG0F1

Page 1 of 2

Site Location Ft. Stewart, GA

Well ID F39TW06

Date Begin 4-6-10

Date End 4-6-10

Contractor/Driller ARA

Rig Type ~~ARA~~ Geoprobe

Method DPT

Total Depth Drilled 45

Sample Method/Size DPT

Cutting Disposal Drum

Time
Begin:
End:

Construction

Intervals (ft BGS)
Riser:
Screen:
Surf. Seal:
Seal:
Filter Pack:
Backfill:

Materials
Riser:
Screen:
Surf. Seal:
Seal:
Filter Pack:
Backfill:

Surface Completion
Protection:
Pad:
Lock:
Date/Time:

ARCADIS G&M Personel
Field Work: JDF
Log Draft:

Symbols
Grout:
Bentonite:
Sand:
Gravel:
Backfill: X
Contact:
Implied or Gradational Contact:

Boring Dia. "

Time
Begin: 1101
End: 1300

Depth (ft)	Spl Run	Class	Borehole Log Description	FL Rec.	Blow Count	PID (ppm)
0			Grass surface			
			10YR5/4 silty well sorted fine sand (yellowish brown)			0.0
1			10YR 7/2 light gray silty well sorted fine sand			
2			10YR 3/1 very dark gray silty well sorted fine sand			0.0
3						
4						0.0
5						
6			10YR 3/2 very dark grayish brown silty well sorted fine sand, wet			
7						0.0
8						0.0
9						
10						0.0
11						
12			7.5YR 4/6 strong brown silty well sorted fine sand			0.0
13						
14						0.0
15						
16						0.0
17						
18			~2" thin lens of 7.5YR 4/6 strong brown poorly sorted well rounded sand and fine gravel up to 5 mm dia @ 18'			0.0
19			7.5YR 4/6 strong brown silty well sorted fine sand			
20						0.0
21						
22						0.0
23						
24						0.0
25						

ARCADIS

Borehole and Well Construction Log

Project: F3T-39
Project No.: GP09HAFS. F39A. DGOF1
Page 2 of 2
Site Location: Ft. Stewart, GA

Well ID: F39TW06
Date Begin: 4-6-10
Date End: 4-6-10
Contractor/Driller: ARCA
Rig Type: Geoprobe
Method: DPT
Total Depth Drilled: 45
Sample Method/Size: DPT
Cutting Disposal: Drum

Boring Dia.

Time
Begin:
End:

Construction

Intervals (ft BGS)
Riser:
Screen:
Surf. Seal:
Seal:
Filter Pack:
Backfill:

Materials
Riser:
Screen:
Surf. Seal:
Seal:
Filter Pack: 20-30 sand
Backfill: N/A

Surface Completion
Protection:
Pad:
Lock:
Date/Time:

ARCADIS G&M Personel
Field Work: JDF
Log Draft:

Symbols
Grout:
Bentonite:
Sand:
Gravel:
Backfill: X
Contact:
Implied or Gradational Contact:

Depth (ft)	Spl Run	Class	Borehole Log Description	Ft. Rec.	Blow Count	PID (ppm)
			Time Begin: 1101 End: 1300			
25						
26			grades to 7.5YR 7/6 reddish yellow silty well sorted fine sand			0.0
27						
28						0.0
29						
30						0.0
31						
32			10YR 7/2 light gray silty well sorted fine sand with ~1" thick lens of 10YR 4/3 brown silty well sorted fine sand @ 34'			0.0
33						
34						0.0
35						
36						0.0
37						
38			10YR 6/1 gray interbedded medium firm high plasticity clay and clayey well sorted fine sand			0.0
39						
40			10YR 6/1 gray clayey well sorted medium sand slight plasticity			0.0
41						
42						0.0
43						
44						0.0
45			- END OF BORING -			
46						
47						
48						
49						
50						

ARCADIS

SOIL CORE / SAMPLING LOG

Boring/Well F39-TW-07 Project/No. GP09HAFS.F39A.DG0FI Page 1 of 1

Site Location: Fort Stewart, Georgia
Drilling Started: 4/7/2010 Drilling Completed: 4/7/2010

Drilling Contractor: ARM Driller: Josh Register Helper: Van Chisholm

Drilling Fluid Used: None Drilling Method: Direct Push

Length and Diameter of Coring Device: 5 Feet Length, 1.5 Inch Diameter Sampling Interval: Continuous

Total Depth Drilled: 45 Feet Hole Diameter: 2" Coring Device: MacroCore

Prepared By: Josh Frizzell Hammer Weight: N/A Hammer Drop: N/A ins.

Soil Characterization:

Sample/Core Depth (Feet bls) From	To	Sample/Core Description
0.0	1.0	10YR6/1 gray silty well sorted fine sand, roots
1.0	3.0	10YR7/1 light gray silty well sorted fine sand
3.0	5.0	10YR4/2 dark grayish brown silty well sorted fine sand
5.0	16.0	10YR3/1 very dark gray silty well sorted fine sand, very dense and compacted
16.0	19.0	7.5YR4/4 brown silty poorly sorted subangular fine to very coarse sand
19.0	24.0	7.5YR4/4 brown well sorted silty fine sand
24.0	25.0	7.5YR3/4 dark brown silty poorly sorted subangular fine to medium sand
25.0	30.0	7.5YR5/6 strong brown silty well sorted fine sand, grades to 7.5YR6/4 light brown silty well sorted fine sand
30.0	33.0	7.5YR6/6 reddish yellow silty well sorted fine sand
33.0	34.0	10YR7/3 very pale brown clayey well sorted fine sand, slight plasticity
34.0	38.0	10YR7/3 very pale brown silty well sorted fine sand
38.0	45.0	10YR6/1 gray clayey well sorted fine sand, slight plasticity

ARCADIS

Borehole and Well Construction Log

Project: FST-39

Project No. GP09HAFS.F39A.DGOPI

Page 1 of 2

Site Location Ft. Stewart, GA

Well ID: F39TW07

Date Begin: 4-7-10

Date End: 4-7-10

Contractor/Driller: ARM

Rig Type: Geoprobe

Method: DPT

Total Depth Drilled: 45

Sample Method/Size: DPT

Cutting Disposal: Drum

Well Construction Log

Boring Dia.

Time
Begin:
End:

Construction Intervals (ft BGS)
Riser:
Screen:
Surf. Seal:
Seal:
Filter Pack:
Backfill:

Materials
Riser:
Screen:
Surf. Seal:
Seal:
Filter Pack:
Backfill:

Surface Completion
Protection:
Pad:
Lock:
Date/Time:

ARCADIS G&M Personel
Field Work: JDF
Log Draft:

Symbols
Grout:
Bentonite:
Sand:
Gravel:
Backfill: X
Contact:
Implied or Gradational Contact:

Depth (ft)	Spl Run	Class	Borehole Log Description	Ft. Rec.	Blow Count	PID (ppm)
			Time Begin: 1040 End: 1210			
0			Grass surface			
			10YR 6/1 gray silty well sorted fine sand roots			0.0
1			10YR 7/1 light gray silty well sorted fine sand			
2						0.0
3			10YR 4/2 dark grayish brown silty well sorted fine sand			
4						0.0
5			10YR 3/1 very dark gray silty well sorted fine sand, very dense/compacted			
6						0.0
7						
8						0.0
9						
10						0.0
11						
12						0.0
13						
14						0.0
15						
16			7.5YR 4/4 brown poorly sorted sub angular fine to very coarse sand, silty			0.0
17						
18						0.0
19			7.5YR 4/4 brown well sorted silty fine sand			
20						0.0
21						
22						0.0
23						
24			7.5YR 3/4 dark brown silty poorly sorted subangular fine to medium sand			0.0
25						

ARCADIS

Borehole and Well Construction Log

Project: FST-39
Project No.: GP09HAFS.F39A.DG0FI
Page 2 of 2
Site Location: Ft. Stewart, GA

Well ID: F39TW07
Date Begin: 4-7-10
Date End: 4-7-10
Contractor/Driller: ARM
Rig Type: Geoprobe
Method: DPT
Total Depth Drilled: 45
Sample Method/Size: DPT
Cutting Disposal: Drum

Well Construction Log

Boring Dia.

Time
Begin:
End:

Construction

Intervals (ft BGS)
Riser:
Screen:
Surf. Seal:
Seal:
Filter Pack:
Backfill:

Materials
Riser:
Screen:
Surf. Seal:
Seal:
Filter Pack: 20-30 sand
Backfill: N/A

Surface Completion
Protection:
Pad:
Lock:
Date/Time:

ARCADIS G&M Personel
Field Work: JDF
Log Draft:

Symbols
Grout:
Bentonite:
Sand:
Gravel:
Backfill: X
Contact:
Implied or Gradational Contact:

Borehole Log

Time
Begin: 1040
End: 1210

Depth (ft)	Spl Run	Class	Description	FL Rec.	Blow Count	PID (ppm)
25			7.5YR5/6 strong brown silty well sorted fine sand, grades to 7.5YR6/4 light brown silty well sorted fine sand			
26						0.0
27						
28						0.0
29						
30			7.5YR6/6 reddish yellow silty well sorted fine sand, CO and H_2S detected on RAE meter			0.0
31						
32						0.2
33			10YR7/3 very pale brown clayey well sorted fine sand, slight plastizity			
34			10YR7/3 very pale brown silty well sorted fine sand			0.2
35						
36						0.0
37						
38			10YR6/1 gray clayey well sorted fine sand, slight plastizity			0.0
39						
40						0.0
41						
42						0.0
43						
44						0.0
45						
46						
47						
48						
49						
50						

ARCADIS

SOIL CORE / SAMPLING LOG

Boring/Well F39-TW-08 Project/No. GP09HAFS.F39A.DG0FI Page 1 of 1

Site Location: Fort Stewart, Georgia
Drilling Started: 4/8/2010 Drilling Completed: 4/8/2010

Drilling Contractor: ARM Driller: Josh Register Helper: Van Chisholm

Drilling Fluid Used: None Drilling Method: Direct Push

Length and Diameter of Coring Device: 5 Feet Length, 1.5 Inch Diameter Sampling Interval: Continuous

Total Depth Drilled: 45 Feet Hole Diameter: 2" Coring Device: MacroCore

Prepared By: Josh Frizzell Hammer Weight: N/A Hammer Drop: N/A ins.

Soil Characterization:

Sample/Core Depth (Feet bls) From	To	Sample/Core Description
0.0	1.0	10YR5/3 brown silty well sorted fine sand
1.0	7.5	10YR3/1 very dark gray silty well sorted fine sand, wet at four feet
7.5	8.0	10YR6/1 gray silty well sorted fine sand
8.0	14.0	10YR3/1 very dark gray silty well sorted fine sand
14.0	17.0	10YR3/4 dark yellowish brown silty well sorted fine sand
17.0	20.0	7.5YR5/6 strong brown poorly sorted subangular fine to medium silty sand
20.0	29.0	7.5YR6/6 reddish yellow silty well sorted fine sand
29.0	45.0	10YR7/2 light gray clayey well sorted fine sand, slight plasticity

ARCADIS

Borehole and Well Construction Log

Project: FST-39

Project No. CP09AAFS, F39A, DGOFI

Page 1 of 2

Site Location Ft. Stewart, GA

Well ID F39TW08

Date Begin

Date End

Contractor/Driller ARM

Rig Type Geoprobe

Method DPT

Total Depth Drilled 45

Sample Method/Size DPT

Cutting Disposal Drum

Well Construction Log

Time
Begin:
End:

Construction

Intervals (ft BGS)
Riser:
Screen:
Surf. Seal:
Seal:
Filter Pack:
Backfill:

Materials
Riser:
Screen:
Surf. Seal:
Seal:
Filter Pack:
Backfill:

Surface Completion
Protection:
Pad:
Lock:
Date/Time:

ARCADIS G&M Personel
Field Work: JDF
Log Draft:

Symbols
Grout:
Bentonite:
Sand:
Gravel:
Backfill: X
Contact:
Implied or Gradational Contact:

Boring Dia.

Borehole Log

Time
Begin:
End:

Depth (ft)	Spl Run	Class	Description	Ft. Rec.	Blow Count	PID (ppm)
0			Grass surface 10YR5/3 brown silty well sorted fine sand			0.0
1			10YR3/1 very dark gray silty well sorted fine sand, wet @ 4'			
2						0.0
3						
4						0.0
5						
6						0.0
7						
8			10YR6/1 gray silty well sorted fine sand 10YR3/1 very dark gray silty well sorted fine sand			0.0
9						
10						0.0
11						
12						0.0
13						
14			10YR3/4 dark yellowish brown silty well sorted fine sand			0.0
15						
16						0.0
17			7.5YR5/6 strong brown poorly sorted subangular fine to medium silty sand			
18						0.0
19						
20			7.5YR6/6 reddish yellow silty well sorted fine sand			0.0
21						
22						0.0
23						
24						0.0
25						

ARCADIS

Borehole and Well Construction Log

Project: FST-39

Project No. GP09HAFS, F39A, DGOFI

Page 2 of 2

Site Location: ~~45~~ Ft. Stewart, GA

Well ID: F39TW08

Contractor/Driller: ARM

Total Depth Drilled: 45

Date Begin:

Rig Type: Geoprobe

Sample Method/Size: DPT

Date End:

Method: DPT

Cutting Disposal: Drum

Well Construction Log

Time
Begin:
End:

Construction

Intervals (ft BGS)
Riser:
Screen:
Surf. Seal:
Seal:
Filter Pack:
Backfill:

Materials
Riser:
Screen:
Surf. Seal:
Seal:
Filter Pack: 20-30 sand
Backfill: N/A

Surface Completion
Protection:
Pad:
Lock:
Date/Time:

ARCADIS G&M Personel
Field Work: JDF
Log Draft:

Symbols
Grout:
Bentonite:
Sand:
Gravel:
Backfill: X
Contact:
Implied or Gradational Contact:

Boring Dia. "

Depth (ft)	Spl Run	Class	Borehole Log Description	Ft. Rec.	Blow Count	PID (ppm)
			Time Begin: End:			
25						
26						0.0
27						
28						0.0
29			10YR7/2 light gray clayey well sorted fine sand, slight plasticity			
30						0.0
31						
32						0.0
33						
34						0.0
35						
36						0.0
37						
38						0.0
39						
40						0.0
41						
42						0.0
43						
44						0.0
45			-END OF BORING-			
46						
47						
48						
49						
50						

ARCADIS

SOIL CORE / SAMPLING LOG

Boring/Well F39-TW-09 Project/No. GP09HAFS.F39A.DG0FI Page 1 of 1

Site Location: Fort Stewart, Georgia
Drilling Started: 4/9/2010 Drilling Completed: 4/9/2010

Drilling Contractor: ARM Driller: Josh Register Helper: Van Chisholm

Drilling Fluid Used: None Drilling Method: Direct Push

Length and Diameter of Coring Device: 5 Feet Length, 1.5 Inch Diameter Sampling Interval: Continuous

Total Depth Drilled: 45 Feet Hole Diameter: 2" Coring Device: MacroCore

Prepared By: Josh Frizzell Hammer Weight: N/A Hammer Drop: N/A ins.

Soil Characterization:

Sample/Core Depth (Feet bls) From	To	Sample/Core Description
0.0	1.0	10YR7/1 light gray silty well sorted fine sand
1.0	4.0	10YR5/6 strong brown silty well sorted fine sand
4.0	5.0	10YR3/1 very dark gray silty well sorted fine sand
5.0	14.0	10YR3/3 dark brown silty well sorted fine sand
14.0	18.0	10YR3/3 dark brrown silty poorly sorted fine to coarse subangular sand
18.0	35.0	7.5YR5/6 strong brown silty well sorted fine sand, grades to 10YR7/3 very pale brown clayey well sorted
		fine sand with slight plasticity
35.0	45.0	10YR6/1 gray clayey well sorted fine sand, slight plasticity

ARCADIS

Borehole and Well Construction Log

Project: FST-39

Project No.: GP09HAFS. F39A. DG0FI

Page 2 of 2

Site Location: Ft. Stewart, GA

Well ID: F39TW09

Date Begin: 4-9-10

Date End: 4-9-10

Contractor/Driller:

Rig Type:

Method:

Total Depth Drilled: 45

Sample Method/Size: DPT

Cutting Disposal: Drum

Well Construction Log

Boring Dia.

Time
Begin:
End:

Construction

Intervals (ft BGS)
Riser:
Screen:
Surf. Seal:
Seal:
Filter Pack:
Backfill:

Materials
Riser:
Screen:
Surf. Seal:
Seal:
Filter Pack: 20-30 sand
Backfill: N/A

Surface Completion
Protection:
Pad:
Lock:
Date/Time:

ARCADIS G&M Personel

Field Work: JDF

Log Draft:

Symbols
Grout:
Bentonite:
Sand:
Gravel:
Backfill: X

Contact:
Implied or Gradational Contact:

Borehole Log

Time
Begin: 1050
End: 1305

Depth (ft)	Spl Run	Class	Description	Ft. Rec.	Blow Count	PID (ppm)
25						
26						0.0
27						
28						0.0
29						
30						0.0
31						
32						0.0
33			grades to 10YR7/3 very pale brown clayey well sorted fine sand with slight plasticity			
34						0.0
35			10YR7/3 very pale brown clayey well sorted fine sand, slight plasticity			
36						0.0
37						
38						0.0
39			10YR6/1 gray clayey well sorted fine sand, slight plasticity			
40						0.0
41						
42						0.0
43						
44						0.0
45			— END OF BORING —			
46						
47						
48						
49						
50						

ARCADIS

Borehole and Well Construction Log

Project: FST-39

Project No. GP09HAED. F39A. DGOFT

Page 1 of 2

Site Location Ft. Stewart, GA

Well ID F39TW09

Date Begin 4-9-10

Date End 4-9-10

Contractor/Driller ARM

Rig Type Geoprobe

Method DPT

Total Depth Drilled 45

Sample Method/Size DPT

Cutting Disposal Drums

Well Construction Log

Boring Dia.

Time
Begin:
End:

Construction

Intervals (ft BGS)
Riser:
Screen:
Surf. Seal:
Seal:
Filter Pack:
Backfill:

Materials
Riser:
Screen:
Surf. Seal:
Seal:
Filter Pack:
Backfill:

Surface Completion
Protection:
Pad:
Lock:
Date/Time:

ARCADIS G&M Personel
Field Work: JDF
Log Draft:

Symbols
Grout:
Bentonite:
Sand:
Gravel:
Backfill: X
Contact:
Implied or Gradational Contact:

Depth (ft)	Spl Run	Class	Borehole Log Description	Ft. Rec.	Blow Count	PID (ppm)
			Time Begin: 1050 End:			
0			Grass surface			
			10YR7/1 light gray silty well sorted fine sand			0.0
1			10YR5/6 strong brown silty well sorted fine sand			
2						0.0
3						
4			10YR3/1 very dark gray silty well sorted fine sand			0.0
5			10YR3/3 dark brown silty well sorted fine sand, wet			
6						0.0
7						
8						0.0
9						
10						0.0
11						
12						0.0
13						
14			10YR3/3 dark brown silty poorly sorted poorly sorted fine to coarse subangular sand			0.0
15						
16						0.0
17						
18			7.5YR5/6 strong brown silty well sorted fine sand			0.0
19						
20						0.0
21						
22						0.0
23						
24						0.0
25						

ARCADIS

SOIL CORE / SAMPLING LOG

Boring/Well F39-TW-10 Project/No. GP09HAFS.F39A.DG0FI Page 1 of 1

Site Location: Fort Stewart, Georgia
Drilling Started: 4/12/2010 Drilling Completed: 4/12/2010

Drilling Contractor: ARM Driller: Josh Register Helper: Van Chisholm

Drilling Fluid Used: None Drilling Method: Direct Push

Length and Diameter of Coring Device: 5 Feet Length, 1.5 Inch Diameter Sampling Interval: Continuous

Total Depth Drilled: 45 Feet Hole Diameter: 2" Coring Device: MacroCore

Prepared By: Josh Frizzell Hammer Weight: N/A Hammer Drop: N/A ins.

Soil Characterization:

Sample/Core Depth (Feet bls) From	To	Sample/Core Description
0.0	1.0	10YR7/1 light gray silty well sorted fine sand
1.0	2.0	10YR6/4 light yellowish brown silty well sorted fine sand
3.0	5.0	10YR3/3 dark brown silty well sorted fine sand, wet at four feet
5.0	11.0	10YR3/1 very dark gray silty well sorted fine sand
11.0	12.5	10YR3/3 dark brown silty well sorted fine sand
12.5	14.0	10YR3/3 dark brown silty poorly sorted fine to medium subangular sand
14.0	20.0	10YR3/3 dark brown silty well sorted fine sand, grades to 10YR5/6 yellowish brown silty well sorted fine
		sand
20.0	29.0	10YR5/6 yellowish brown clayey well sorted fine sand, slight plasticity
29.0	34.0	10YR6/4 light yellowish brown silty well sorted fine sand
34.0	41.0	10YR6/1 gray clayey well sorted fine sand, slight to moderate plasticity
41.0	45.0	10YR6/1 gray clayey poorly sorted fine to medium subangular sand, slight plasticity

ARCADIS

Borehole and Well Construction Log

Project: FST-39

Project No. GP09HAFS.F39A.DG0FI

Page 1 of 2

Site Location Ft. Stewart, GA

Well ID F39TW10

Date Begin 4-12-10

Date End 4-12-10

Contractor/Driller ARM

Rig Type Geoprobe

Method DPT

Total Depth Drilled 45

Sample Method/Size DPT

Cutting Disposal Drum

Well Construction Log

Boring Dia.

Time
Begin:
End:

Construction

Intervals (ft BGS)
Riser:
Screen:
Surf. Seal:
Seal:
Filter Pack:
Backfill:

Materials
Riser:
Screen:
Surf. Seal:
Seal:
Filter Pack:
Backfill:

Surface Completion
Protection:
Pad:
Lock:
Date/Time:

ARCADIS G&M Personel
JDP

Field Work:
Log Draft:

Symbols
Grout:
Bentonite:
Sand:
Gravel:
Backfill: X
Contact:
Implied or Gradational Contact:

Depth (ft)	Spl Run	Class	Borehole Log Description	Ft. Rec.	Blow Count	PID (ppm)
			Time Begin: 1630 End: 1850			
0			Grass surface			
			10YR7/1 light gray silty well sorted fine sand			0.0
1			10YR6/4 light yellowish brown silty well sorted fine sand			
2			10YR3/1 very dark gray silty well sorted fine sand			0.0
3			10YR3/3 dark brown silty well sorted fine sand, wet @ 4'			
4						0.0
5			10YR3/1 very dark gray silty well sorted fine sand			
6						0.0
7						
8						0.0
9						
10						0.0
11			10YR3/3 dark brown silty well sorted fine sand			
12						0.0
13			10YR3/3 dark brown silty poorly sorted fine to medium subangular sand			
14			10YR3/3 dark brown silty well sorted fine sand, grades to 10YR5/6 yellowish brown silty well sorted fine sand			0.0
15						
16						0.0
17						
18						0.0
19						
20			10YR5/6 yellowish brown clayey well sorted fine sand, slight plasticity			0.0
21						
22						0.0
23						
24						0.0
25						

ARCADIS

Borehole and Well Construction Log

Project: FST-39
Project No.: GP09HAFS F39A. DG&FI
Page 2 of 2
Site Location: Ft. Stewart, GA

Well ID: F39TW10
Date Begin: 4-12-10
Date End: 4-12-10
Contractor/Driller: ARM
Rig Type: Geoprobe
Method: DPT
Total Depth Drilled: 45
Sample Method/Size: DPT
Cutting Disposal: Drum

Well Construction Log

Boring Dia.

Time
Begin:
End:

Construction

Intervals (ft BGS)
Riser:
Screen:
Surf. Seal:
Seal:
Filter Pack:
Backfill:

Materials
Riser:
Screen:
Surf. Seal:
Seal:
Filter Pack: 20-30 sand
Backfill: N/A

Surface Completion
Protection:
Pad:
Lock:
Date/Time:

ARCADIS G&M Personel
Field Work: JDF
Log Draft:

Symbols
Grout:
Bentonite:
Sand:
Gravel:
Backfill: X

Contact:
Implied or Gradational Contact:

Depth (ft)	Spl Run	Class	Borehole Log Description	Ft. Rec.	Blow Count	PID (ppm)
			Time Begin: 1630 End: 1850			
25						
26						0.0
27						
28						0.0
29			10YR6/4 light yellowish brown silty well sorted fine sand			
30						0.0
31						
32						0.0
33						
34			10YR6/1 gray clayey well sorted fine sand, slight to moderate plasticity			0.0
35						
36						0.0
37						
38						0.0
39						
40						0.0
41			10YR6/1 gray clayey poorly sorted fine to medium subangular sand slight plasticity			
42						0.0
43						
44						0.0
45			- END OF BORING -			
46						
47						
48						
49						
50						

ARCADIS

SOIL CORE / SAMPLING LOG

Boring/Well F39-TW-11 Project/No. GP09HAFS.F39A.DG0FI Page 1 of 1

Site Location: Fort Stewart, Georgia
Drilling Started: 4/13/2010 Drilling Completed: 4/13/2010

Drilling Contractor: ARM Driller: Josh Register Helper: Van Chisholm

Drilling Fluid Used: None Drilling Method: Direct Push

Length and Diameter of Coring Device: 5 Feet Length, 1.5 Inch Diameter Sampling Interval: Continuous

Total Depth Drilled: 45 Feet Hole Diameter: 2" Coring Device: MacroCore

Prepared By: Josh Frizzell Hammer Weight: N/A Hammer Drop: N/A ins.

Soil Characterization:

Sample/Core Depth (Feet bls) From	To	Sample/Core Description
0.0	1.0	10YR5/1 gray silty well sorted fine sand
1.0	2.0	10YR4/6 dark yellowish brown silty well sorted fine sand
2.0	3.0	10YR8/3 very pale brown silty well sorted fine sand
3.0	5.0	10YR3/3 dark brown silty well sorted fine sand
5.0	13.0	10YR3/2 very dark grayish brown silty well sorted fine sand
13.0	17.0	7.5YR4/4 brown silty well sorted fine sand
17.0	24.0	7.5YR4/6 strong brown silty well sorted fine sand
24.0	27.0	7.5YR4/6 strong brown silty poorly sorted fine to coarse subangular sand
27.0	32.0	7.5YR5/6 strong brown silty well sorted fine sand
32.0	34.0	10YR6/3 pale brown sand soft high plasticity clay
34.0	36.5	10YR6/1 gray clayey poorly sorted fine to coarse subangular sand
36.5	42.0	10YR6/1 gray clayey well sorted fine sand, slight plasticity
42.0	45.0	10YR6/1 gray clayey poorly sorted fine to medium sand

ARCADIS

Borehole and Well Construction Log

Project: PST-39

Project No. GP09HAFS.F39A.DGOFI

Page 1 of 2

Site Location Ft. Stewart

Well ID F39TW11

Date Begin 4-13-10

Date End 4-13-10

Contractor/Driller ARM

Rig Type Geoprobe

Method DPT

Total Depth Drilled 45

Sample Method/Size DPT

Cutting Disposal Drum

Well Construction Log

Boring Dia.

Time

Begin:

End:

Construction

Intervals (ft BGS)

Riser:

Screen:

Surf Seal:

Seal:

Filter Pack:

Backfill:

Materials

Riser:

Screen:

Surf. Seal:

Seal:

Filter Pack:

Backfill:

Surface Completion

Protection:

Pad:

Lock:

Date/Time:

ARCADIS G&M Personel

Field Work: JDF

Log Draft:

Symbols

Grout:

Bentonite:

Sand:

Gravel:

Backfill: X

Contact:

Implied or Gradational Contact:

Depth (ft)	Spl Run	Class	Borehole Log Description	Ft. Rec.	Blow Count	PID (ppm)
			Time Begin: 1530 End: 1860			
0			Grass surface			
			10YR 5/1 gray silty well sorted fine sand			0.0
1			10YR 4/6 dark yellowish brown silty well sorted fine sand			
2			10YR 8/3 very pale brown silty well sorted fine sand			0.0
3			10YR 3/3 silty well sorted fine sand (dark brown)			
4						0.0
5			10YR 3/2 very dark grayish brown silty well sorted fine sand			
6						0.0
7						
8						0.0
9						
10						0.0
11						
12						0.0
13			7.5YR 4/4 brown silty well sorted fine sand			
14						0.0
15						
16						0.0
17			7.5YR 4/6 strong brown silty well sorted fine sand			
18						0.0
19						
20						0.0
21						
22						0.0
23						
24			7.5YR 4/6 strong brown silty poorly sorted fine to coarse subangular sand			0.0
25						

ARCADIS

Borehole and Well Construction Log

Project: FST-39
Project No.: GP09HAFS.F39A.DGOFI
Page 2 of 2
Site Location: Ft. Stewart

Well ID: F39TW11
Date Begin: 4-13-10
Date End: 4-13-10
Contractor/Driller: ARM
Rig Type: Geoprobe
Method: DPT
Total Depth Drilled: 45
Sample Method/Size: DPT
Cutting Disposal: Drum

Well Construction Log

Boring Dia.

Time
Begin:
End:

Construction

Intervals (ft BGS)
Riser:
Screen:
Surf. Seal:
Seal:
Filter Pack:
Backfill:

Materials
Riser:
Screen:
Surf. Seal:
Seal:
Filter Pack: 20-30 sand
Backfill: N/A

Surface Completion
Protection:
Pad:
Lock:
Date/Time:

ARCADIS G&M Personel
Field Work: JOF
Log Draft:

Symbols
Grout:
Bentonite:
Sand:
Gravel:
Backfill: X
Contact:
Implied or Gradational Contact:

Borehole Log

Time
Begin: 1530
End: 1810

Depth (ft)	Spl Run	Class	Description	Ft. Rec.	Blow Count	PID (ppm)
25						
26						0.0
27			7.5YR 5/6 strong brown silty well sorted fine sand; CO detected @ 48 ppm			
28						0.0
29						
30						0.0
31						
32			10YR 6/3 pale brown sandy soft high plasticity clay			0.2
33						
34			10YR 6/1 gray clayey poorly sorted fine to coarse subangular sand, cohesive, moderate plasticity, soft			0.4
35						
36						0.6
37			10YR 6/1 gray clayey well sorted fine sand, slight plasticity			
38						0.7
39						
40						1.1
41						
42			10YR 6/1 gray clayey poorly sorted fine to medium sand			
43						
44						
45			- END OF BORING -			
46						
47						
48						
49						
50						

ARCADIS

SOIL CORE / SAMPLING LOG

Boring/Well F39-TW-12 Project/No. GP09HAFS.F39A.DG0FI Page 1 of 1

Site Location: Fort Stewart, Georgia
Drilling Started: 4/14/2010 Drilling Completed: 4/14/2010

Drilling Contractor: ARM Driller: Josh Register Helper: Van Chisholm

Drilling Fluid Used: None Drilling Method: Direct Push

Length and Diameter of Coring Device: 5 Feet Length, 1.5 Inch Diameter Sampling Interval: Continuous

Total Depth Drilled: 45 Feet Hole Diameter: 2" Coring Device: MacroCore

Prepared By: Josh Frizzell Hammer Weight: N/A Hammer Drop: N/A ins.

Soil Characterization:

Sample/Core Depth (Feet bls) From	To	Sample/Core Description
0.0	1.0	10YR3/1 very dark gray silt and subangular gravel
1.0	5.0	10YR3/1 very dark gray silty poorly sorted fine to medium sand, some subangular gravel, wood fragments
		and roots
5.0	6.0	10YR7/2 light gray silty well sorted fine sand
6.0	12.0	10YR3/3 dark brown silty poorly sorted fine to medium subangular sand
12.0	15.0	7.5YR3/4 dark brown silty well sorted fine sand
15.0	20.0	Grades to 7.5 YR4/6 strong brown silty well sorted fine sand
20.0	25.0	Grades to 10YR6/3 pale brown clayey well sorted fine sand, slight plasticity
25.0	29.0	10YR6/3 pale brown clayey well sorted fine sand
29.0	32.0	10YR7/2 light gray clayey well sorted fine sand, moderate plasticity
32.0	45.0	10YR6/1 gray clayey well sorted fine sand, moderate plasticity

ARCADIS

Borehole and Well Construction Log

Project: FST-39
Project No. GP09HAFS.F39A.DGOFT
Page 1 of 2
Site Location Ft. Stewart

Well ID F39TW12
Date Begin 9-14-10
Date End 9-14-10
Contractor/Driller ARM
Rig Type Geoprobe
Method DPT
Total Depth Drilled 4.5
Sample Method/Size DPT
Cutting Disposal Drum

Well Construction Log

Boring Dia. "

Time
Begin:
End:

Construction

Intervals (ft BGS)
Riser:
Screen:
Surf. Seal:
Seal:
Filter Pack:
Backfill:

Materials
Riser:
Screen:
Surf. Seal:
Seal:
Filter Pack:
Backfill:

Surface Completion
Protection:
Pad:
Lock:
Date/Time:

ARCADIS G&M Personel
Field Work: JDF
Log Draft:

Symbols
Grout:
Bentonite:
Sand:
Gravel:
Backfill: X
Contact: ———
Implied or Gradational Contact: - - - - -

Depth (ft)	Spl Run	Class	Borehole Log Description	Ft. Rec.	Blow Count	PID (ppm)
			Time Begin: 1200 End: 1355			
0			Grass surface			
			10YR 3/1 very dark gray silt and subangular gravel.			0.0
1			10YR 3/1 very dark gray silty poorly sorted fine to medium sand, some subangular gravel, trace wood fragments/roots			
2						0.0
3						
4						0.0
5			10YR 7/3 light gray silty well sorted fine sand			
6						0.2
			10YR 3/3 dark brown silty poorly sorted fine to medium subangular sand, H_2S @ 14 ppm.			
7						
8						0.9
9						
10						0.2
11						
12			7.5YR 3/4 dark brown silty well sorted fine sand			0.2
13						
14						0.1
15			Grades to 7.5YR 4/6 strong brown silty well sorted fine sand			
16						0.0
17						
18			CO detected @ 22 ppm			0.1
19						
20			Grades to ~~7.5YR~~ 10YR 6/3 pale brown clayey well sorted fine sand, slight plasticity			0.1
21						
22			H_2S detected @ 8 ppm			0.2
23						
24						0.1
25						

ARCADIS

Borehole and Well Construction Log

Project: FST-39
Project No.: GP094AFS. F39A.DG.0FI
Page 2 of 3
Site Location: Ft. Stewart, GA

Well ID: F39TW12
Date Begin: 4-14-10
Date End: 4-14-10
Contractor/Driller: ARM
Rig Type: Geoprobe
Method: DPT
Total Depth Drilled: 45
Sample Method/Size: DPT
Cutting Disposal: Drum

Well Construction Log

Boring Dia. ___"

Time
Begin:
End:

Construction

Intervals (ft BGS)
Riser:
Screen:
Surf. Seal:
Seal:
Filter Pack:
Backfill:

Materials
Riser:
Screen:
Surf. Seal:
Seal:
Filter Pack: 20-30 sand
Backfill: N/A

Surface Completion
Protection:
Pad:
Lock:
Date/Time:

ARCADIS G&M Personel
Field Work: JDF
Log Draft:

Symbols
Grout:
Bentonite:
Sand:
Gravel:
Backfill: X
Contact:
Implied or Gradational Contact:

Borehole Log

Time
Begin: 1200
End: 1355

Depth (ft)	Description	Ft. Rec.	Blow Count	PID (ppm)
25	10YR6/3 pale brown clayey well sorted fine sand			
26				0.2
27				
28	CO @ 56 ppm			0.2
29	10YR7/2 light gray clayey well sorted fine sand, moderate plasticity			
30				0.2
31				
32	10YR6/1 gray clayey well sorted fine sand, moderate plasticity			0.1
33				
34				0.1
35				
36				0.0
37				
38				0.0
39				
40				0.0
41				
42				0.0
43				
44				0.0
45	-END OF BORING-			
46				
47				
48				
49				
50				

ARCADIS

SOIL CORE / SAMPLING LOG

Boring/Well F-39-SB-014 Project/No. F5T-39 Page 1 of 4

Site Location Ft. Stewart, GA Drilling Started 7-18-11 Drilling Completed 7-18-11

Drilling Contractor Parratt Wolff Driller Josh Ellingworth Helper James Terry

Drilling Fluid Used None Drilling Method DPT Dual Tube

Length and Diameter of Coring Device 5-foot length, 2-inch diameter Sampling Interval Continuous feet

Total Depth Drilled 92 Feet Hole Diameter 2" Coring Device DPT Dual Tube

Prepared By Josh Frizzell Hammer Weight N/A Hammer Drop N/A ins.

Soil Characterization:

Sample/Core Depth (Feet bls) From	To	Sample/Core Description	PID (ppm)
		Grass surface	
0	1	10YR 4/2 dark grayish brown silty well sorted fine	
1	2	sand, trace roots, some angular gravel	
2	3	10YR 8/3 very pale brown well sorted fine sand	
3	4		
4	5		
5	6	10YR 3/1 very dark gray silty well sorted fine sand,	
6	7	wet @ 6'	0.0
7	8		
8	9		
9	10		0.3
10	11		
11	12		
12	13		0.0
13	14		
14	15		
15	16	7.5YR 5/6 strong brown silty well sorted	
16	17	fine sand	0.0
17	18		
18	19		
19	20		0.0
20	21	Advanced closed-system dual tube due to	
21	22	heaving / flowing sands	
22	23		
23	24		
24	25		

ARCADIS

SOIL CORE / SAMPLING LOG

Boring/Well F-39-SB-014 Project/No. FST-39 Page 2 of 4

Site Location Ft. Stewart, GA Drilling Started 7-18-11 Drilling Completed 7-18-11

Drilling Contractor Parratt Wolff Driller Josh Ellingsworth Helper James Terry

Drilling Fluid Used None Drilling Method DPT Dual Tube

Length and Diameter of Coring Device 5-foot length, 2-inch diameter Sampling Interval Continuous feet

Total Depth Drilled 92 Feet Hole Diameter 2" Coring Device DPT Dual Tube

Prepared By Josh Frizzell Hammer Weight N/A Hammer Drop N/A ins.

Soil Characterization:

Sample/Core Depth (Feet bls) From	To	Sample/Core Description	
25	26		
26	27		
27	28		
28	29		
29	30		
30	31		
31	32		
32	33		
33	34		
34	35		
35	36		
36	37		
37	38		
38	39		
39	40		
40	41		
41	42		
42	43		
43	44		PID (ppm)
44	45		
45	46	10YR6/1 gray clayey poorly sorted fine to medium	0.0
46	47	subangular sand, slight plasticity	
47	48		
48	49		0.5
49	50		

ARCADIS

SOIL CORE / SAMPLING LOG

Boring/Well F-39-SB-014 Project/No. FST-39 Page 3 of 4

Site Location Ft. Stewart, GA Drilling Started 7-18-11 Drilling Completed 7-18-11

Drilling Contractor Parratt Wolff Driller Josh Ellingworth Helper James Terry

Drilling Fluid Used None Drilling Method DPT Dual Tube

Length and Diameter of Coring Device 5-foot length, 2-inch diameter Sampling Interval Continuous feet

Total Depth Drilled 92 Feet Hole Diameter 2" Coring Device DPT Dual Tube

Prepared By Josh Frizzell Hammer Weight N/A Hammer Drop N/A ins.

Soil Characterization:

Sample/Core Depth (Feet bls) From	To	Sample/Core Description	PID (ppm)
50	51	10YR6/1 gray clayey poorly sorted fine to coarse	
51	52	subangular sand, slight to moderate plasticity,	0.5
52	53	~1 foot recovery	
53	54		
54	55		
55	56	10YR6/1 gray soft clay and well sorted fine sand,	0.4
56	57	moderate to high plasticity	
57	58		
58	59	10YR5/1 gray soft moderate to high plasticity clay,	
59	60	trace fine sand	
60	61		
61	62		1.3
62	63		
63	64		4.0
64	65		
65	66		7.0
66	67		
67	68		10.0
68	69		
69	70		
70	71	10YR5/1 gray medium firm clay and well sorted fine	1.7
71	72	sand, low to moderate plasticity	
72	73		
73	74		1.9
74	75		

ARCADIS

SOIL CORE / SAMPLING LOG

Boring/Well E-39-SB-014 Project/No. FST-39 Page 4 of 9

Site Location Ft. Steward, GA Drilling Started 7-18-11 Drilling Completed 7-18-11

Drilling Contractor Parratt Wolff Driller Josh Ellingworth Helper James Terry

Drilling Fluid Used None Drilling Method DPT Dual Tube

Length and Diameter of Coring Device 5-foot length, 2-inch diameter Sampling Interval Continuous feet

Total Depth Drilled 92 Feet Hole Diameter 2" Coring Device DPT Dual Tube

Prepared By Josh Frizzell Hammer Weight N/A Hammer Drop N/A ins.

Soil Characterization:

Sample/Core Depth (Feet bls) From	To	Sample/Core Description	PID (ppm)
75	76		
76	77		0.7
77	78		
78	79	10YR5/1 gray medium firm moderate plasticity clay, some	0.3
79	80	well sorted fine sand	
80	81		0.1
81	82		
82	83		
83	84		0.0
84	85		
85	86	10YR5/1 gray medium firm clay and well sorted fine	0.0
86	87	sand, slight to moderate plasticity	
87	88		0.0
88	89		
89	90		0.0
90	91	10YR5/1 gray silty poorly sorted medium to very coarse	
91	92	angular sand	0.0
92	93	- END of Boring -	
93	94		
94	95	- Heaving/flowing sands encountered, jetted borehole	
95	96	through outer DPT casing to total depth	
96	97	with portland cement-bentonite grout, tremie	
97	98	grouted borehole from bottom up	
98	99		
99	100		

ARCADIS

Sample/Core Log (Cont.d)

Boring/Well G4MW034

Prepared by Robby Sheahy

Sample/Core Depth (feet below land surface) From	To	Core Recovery (inches)	PID Reading (ppm)	Sample/Core Description
			26 (0.0)	
25	30	32	27 (0.0)	32'-33.5' Sand Coarse - Fine w/ some clay, grey, wet
			28 (0.0)	
			29 (0.0)	33.5'-34.0' Sand Coarse - Fine w/ some clay, some small
			30 (0.0)	Subangular quartz pebbles, wet
			31 (0.0)	
30	35	36	32 (0.0)	34'-36' Sand Fine - V. Fine w/ some clay, med dark grey, wet
			33 (0.0)	
			34 (0.0)	36'-44' Sand V Fine and silt, some shell fragments
			35 (0.0)	light grey, wet
			36 (0.0)	
35	40	34	37 (0.0)	44'-52' Sand V.Fine w/ some silt, trace clay, light grey/tan
			38 (0.0)	trace coarse sand, moist
			39 (0.0)	
			40 (0.0)	52'-55 Sand Med - V.Fine w/ some silt, some clay,
			41 (0.0)	trace pebble Med - Small well rounded, trace coarse sand
40	45	47	42 (0.0)	grey - light grey, moist
			43 (0.0)	
			44 (0.0)	
			45 (0.0)	
45	50	39	46 (0.0)	
			47 (0.0)	
			48 (0.0)	
			49 (0.0)	
50	55	41	50 (0.0)	
			51 (0.0)	
			52 (0.0)	
			53 (0.0)	
			54 (0.0)	
			55 (0.0)	

ARCADIS

SOIL CORE / SAMPLING LOG

Boring/Well G4MW-037 Project/No. GP09HAFS.F39A.DG0FI Page 1 of 1

Site Location: Fort Stewart, Georgia
Drilling Started: 11/11/2010 Drilling Completed: 11/11/2010

Drilling Contractor: ARM Driller: Josh Register Helper: Van Chisholm

Drilling Fluid Used: None Drilling Method: Direct Push

Length and Diameter of Coring Device: 5 Feet Length, 1.5 Inch Diameter Sampling Interval: Continuous

Total Depth Drilled: 45 Feet Hole Diameter: 2" Coring Device: MacroCore

Prepared By: Josh Frizzell Hammer Weight: N/A Hammer Drop: N/A ins.

Soil Characterization:

Sample/Core Depth (Feet bls) From	To	Sample/Core Description
0.0	0.5	10YR6/1 gray silty very fine sand, some angular gravel
0.5	2.0	10YR5/2 grayish brown silty well sorted fine sand
2.0	3.0	10YR7/2 light gray silty well sorted fine sand
3.0	4.0	10YR5/1 gray silty well sorted fine sand
4.0	10.0	10YR3/1 very dark gray silty well sorted fine sand
10.0	15.0	10YR3/1 very dark gray silty well sorted fine sand, grades to 5YR4/4 reddish brown
15.0	30.0	5YR4/4 reddish brown silty well sorted fine sand, grades to silty well sorted subangular medium sand,
		5YR4/4 reddish brown lenses of silty poorly sorted coarse subangular sand approximately one inch thick
		at 23.0, 24.5 feet, and 26.0 feet
30.0	38.0	5YR4/4 reddish brown silty well sorted medium sand, grades to silty well sorted fine sand
38.0	39.5	10YR5/1 gray clayey well sorted fine sand
39.5	40.0	10YR5/1 gray medium firm high plasticity clay
40.0	41.0	10YR6/3 pale brown clayey well sorted fine sand, slight plasticity
41.0	42.0	10YR6/2 light brownish gray medium firm high plasticity sandy clay
42.0	45.0	10YR5/1 gray silty well sorted subangular medium sand

ARCADIS

SOIL CORE / SAMPLING LOG

Boring/Well G4MW-037 Project/No. ~~SWMU-9~~ FST-39 Page 1 of 4

Site Location ~~Fort Gordon, GA~~ Ft. Stewart, GA Drilling Started 11-11-10 Drilling Completed 11-11-10

Drilling Contractor ~~GeoLab~~ ARM Driller Josh Register Helper Van Chisholm

Drilling Fluid Used None Drilling Method DPT

Length and Diameter of Coring Device 5' Sampling Interval 5 feet

Total Depth Drilled 45 Feet Hole Diameter 2" Coring Device Macro Core

Prepared By Josh Frizzell Hammer Weight N/A Hammer Drop N/A ins.

Soil Characterization:

Sample/Core Depth (Feet bls) From	To	Sample/Core Description	PID ppm
		Grass surface	
0.0	0.5	10YR 6/1 gray silty very fine sand, some angular gravel	
0.5	1.0	10YR 5/2 grayish brown silty well sorted fine sand	
1.0	1.5	↓	
1.5	2.0	↓	
2.0	2.5	10YR 7/2 light gray silty well sorted fine sand	
2.5	3.0	↓	
3.0	3.5	10YR 5/1 gray silty well sorted fine sand	
3.5	4.0	↓	
4.0	4.5	10YR 3/1 very dark gray silty well sorted fine sand	
4.5	5.0	↓	
5.0	5.5	↓	
5.5	6.0	↓	
6.0	6.5	↓	
6.5	7.0	wet @ ~7'	
7.0	7.5	↓	
7.5	8.0	↓	
8.0	8.5	↓	
8.5	9.0	↓	
9.0	9.5	↓	
9.5	10.0	↓	
10.0	10.5	same as above, grades to 5YR 4/4 reddish brown	
10.5	11.0	↓	
11.0	11.5	↓	
11.5	12.0	↓	
12.0	12.5	↓	

ARCADIS

SOIL CORE / SAMPLING LOG

Boring/Well GY MW-037 Project/No. ~~SWMU-9~~ FST-39 Page 2 of 4

Site Location ~~Fort Gordon, GA~~ Ft. Stewart, GA Drilling Started 11-11-10 Drilling Completed 11-11-10

Drilling Contractor ~~GeoLab~~ ARM Driller Josh Register Helper Van Chisholm

Drilling Fluid Used None Drilling Method DPT

Length and Diameter of Coring Device 5' Sampling Interval 5' feet

Total Depth Drilled 45 Feet Hole Diameter 2" Coring Device Macro Core

Prepared By Josh Frizzell Hammer Weight N/A Hammer Drop N/A ins.

Soil Characterization:

Sample/Core Depth (Feet bls) From	To	Sample/Core Description	PID ppm
12.5	13.0		
13.0	13.5		
13.5	14.0		
14.0	14.5		
14.5	15.0		
15.0	15.5	same as above, grades to well sorted silty	
15.5	16.0	subangular medium sand	
16.0	16.5		
16.5	17.0		
17.0	17.5		
17.5	18.0		
18.0	18.5		
18.5	19.0		
19.0	19.5		
19.5	20.0		
20.0	20.5	Same as above, ~ 1" thick lenses of poorly sorted silty	
20.5	21.0	coarse subangular sand @ 23' and 24.5'	
21.0	21.5		
21.5	22.0		
22.0	22.5		
22.5	23.0		
23.0	23.5		
23.5	24.0		
24.0	24.5		
24.5	25.0		

ARCADIS

SOIL CORE / SAMPLING LOG

Boring/Well G4MW-037 Project/No. ~~SWMU-9~~ FST-39 Page 3 of 4

Site Location ~~Fort Gordon, GA~~ Ft. Stewart, GA Drilling Started 11-11-10 Drilling Completed 11-11-10

Drilling Contractor ~~GeoLab~~ ARA Driller Josh Riggins Helper Van Chisholm

Drilling Fluid Used None Drilling Method DPT

Length and Diameter of Coring Device 5' Sampling Interval 5' feet

Total Depth Drilled 45 Feet Hole Diameter 2" Coring Device Macro Core

Prepared By Josh Frizzell Hammer Weight N/A Hammer Drop N/A ins.

Soil Characterization:

Sample/Core Depth (Feet bls) From	To	Sample/Core Description	PID ppm
25.0	25.5	same as above, ~1" thick lens of poorly sorted silty	
25.5	26.0	coarse subangular sand @ 26'	
26.0	26.5		
26.5	27.0		
27.0	27.5		
27.5	28.0		
28.0	28.5		
28.5	29.0		
29.0	29.5		
29.5	30.0		
30.0	30.5	same as above, grades to silty well sorted fine	
30.5	31.0	sand	
31.0	31.5		
31.5	32.0		
32.0	32.5		
32.5	33.0		
33.0	33.5	~~10YR5/1 gray clayey well sorted fine sand~~	
33.5	34.0		
34.0	34.5		
34.5	35.0	~~10YR5/1 gray medium firm high plasticity sandy clay~~	
35.0	35.5		
35.5	36.0		
36.0	36.5		
36.5	37.0		
37.0	37.5		

ARCADIS

SOIL CORE / SAMPLING LOG

Boring/Well G4MW-037 Project/No. ~~SWMU-9~~ FST-39 Page 4 of 4

Site Location ~~Fort Gordon, GA~~ Ft. Stewart, GA Drilling Started 11-11-10 Drilling Completed 11-11-10

Drilling Contractor ~~GeoLab~~ ARM Driller Josh Register Helper Van Chisholm

Drilling Fluid Used None Drilling Method DPT

Length and Diameter of Coring Device 5' Sampling Interval 5' feet

Total Depth Drilled 45 Feet Hole Diameter 2" Coring Device Macro Core

Prepared By Josh Frizzell Hammer Weight N/A Hammer Drop N/A ins.

Soil Characterization:

Sample/Core Depth (Feet bls) From	To	Sample/Core Description	PID ppm
37.5	38.0		
38.0	38.5	10YR5/1 gray clayey well sorted fine sand	
38.5	39.0		
39.0	39.5		
39.5	40.0	10YR5/1 gray medium firm high plasticity clay	
40.0	40.5	10 YR6/3 pale brown clayey well sorted fine sand,	
40.5	41.0	slight plasticity	
41.0	41.5	10YR6/2 light brownish gray medium firm high plasticity	
41.5	42.0	sandy clay	
42.0	42.5	10YR5/1 gray silty well sorted subangular medium	
42.5	43.0	sand	
43.0	43.5		
43.5	44.0		
44.0	44.5		
44.5	45.0		
45.0	45.5	-END OF BORING-	
45.5	46.0		
46.0	46.5		
46.5	47.0		
47.0	47.5		
47.5	48.0		
48.0	48.5		
48.5	49.0		
49.0	49.5		
49.5	50.0		

Report of Analysis

ARCADIS U.S., Inc.
30 Patewood Drive
Suite 155
Greenville, SC 29615
Attention: Allison Fang

Project Name: Fort Stewart FST-39

Project Number: GP09HAFS.F39A.DGOF1

Lot Number: ME10010

Date Completed: 05/27/2011

Nisreen Saikaly
Project Manager

This report shall not be reproduced, except in its entirety, without the written approval of Shealy Environmental Services, Inc.

The following non-paginated documents are considered part of this report: Chain of Custody Record and Sample Receipt Checklist.

* M E 1 0 0 1 0 *

Case Narrative
ARCADIS U.S., Inc.
Lot Number: ME10010

This Report of Analysis contains the analytical result(s) for the sample(s) listed on the Sample Summary following this Case Narrative. The sample receiving date is documented in the header information associated with each sample.

All results listed in this report relate only to the samples that are contained within this report.

Sample receipt, sample analysis, and data review have been performed in accordance with the most current approved NELAC standards, the Shealy Environmental Services, Inc. ("Shealy") Quality Assurance Management Plan (QAMP), standard operating procedures (SOPs), and Shealy policies. Any exceptions to the NELAC standards, the QAMP, SOPs or policies are qualified on the results page or discussed below.

Shealy is not NELAC certified for Phosphorus by 365.1 but is certified in SC and NC.

Shealy is not NELAC certified for VPH, but is certified for VPH in NC.

If you have any questions regarding this report please contact the Shealy Project Manager listed on the cover page.

Semivolatile Organic Compounds

The surrogate recovery for sample -001, the MS and teh MSD of sample -001 was outside the acceptance limit. The surrogate recovery is attributed to matrix interference. The sample results are reported and no corrective action is required.
The surrogate recovery for sample -006 and -008 was outside the acceptance limit. The sample was re-extracted and re-analyzed yielding the same failure. The surrogate recovery is attributed to matrix interference. The sample results are reported and no corrective action is required.
The LCS recovery for 4-Chloroaniline was slightly outside method control limits in batches 59361 and 59927. As per method, it is statistically likely that a few analytes will be outside control limits; up to five analytes may marginally exceed the control limits. Therefore the associated sample results were reported and no corrective action was required.

Sample Summary

ARCADIS U.S., Inc.

Lot Number: ME10010

Sample Number	Sample ID	Matrix	Date Sampled	Date Received
001	G4MW-048(050611)	Aqueous	05/06/2011 1900	05/10/2011
002	G4MW-049(050411)	Aqueous	05/04/2011 2030	05/10/2011
003	G4MW-050(050611)	Aqueous	05/06/2011 1415	05/10/2011
004	G4MW-051(050611)	Aqueous	05/06/2011 1500	05/10/2011
005	G4MW-052(050611)	Aqueous	05/06/2011 1800	05/10/2011
006	G4MW-053(050611)	Aqueous	05/06/2011 1615	05/10/2011
007	G4MW-054(050611)	Aqueous	05/06/2011 1030	05/10/2011
008	Trip Blank(050611)	Aqueous	05/06/2011 0900	05/10/2011

(8 samples)

Executive Summary
ARCADIS U.S., Inc.
Lot Number: ME10010

Sample	Sample ID	Matrix	Parameter	Method	Result	Q	Units	Page
001	G4MW-048(050611)	Aqueous	Acetone	8260B	240		ug/L	7
001	G4MW-048(050611)	Aqueous	Benzene	8260B	0.15	J	ug/L	7
001	G4MW-048(050611)	Aqueous	cis-1,2-Dichloroethene	8260B	0.42	J	ug/L	7
001	G4MW-048(050611)	Aqueous	Methyl tertiary butyl ether (MTBE)	8260B	1.1		ug/L	7
001	G4MW-048(050611)	Aqueous	Vinyl chloride	8260B	0.56	J	ug/L	7
001	G4MW-048(050611)	Aqueous	Dissolved Barium	6010C	0.025		mg/L	11
001	G4MW-048(050611)	Aqueous	Dissolved Chromium	6010C	0.0023	J	mg/L	11
001	G4MW-048(050611)	Aqueous	Dissolved Selenium	6010C	0.0077	BJ	mg/L	11
001	G4MW-048(050611)	Aqueous	Arsenic	6010C	0.0064	BJ	mg/L	12
001	G4MW-048(050611)	Aqueous	Barium	6010C	0.25		mg/L	12
001	G4MW-048(050611)	Aqueous	Cadmium	6010C	0.00082	J	mg/L	12
001	G4MW-048(050611)	Aqueous	Chromium	6010C	0.0088		mg/L	12
001	G4MW-048(050611)	Aqueous	Lead	6010C	0.048		mg/L	12
001	G4MW-048(050611)	Aqueous	Mercury	7470A	0.0024		mg/L	12
001	G4MW-048(050611)	Aqueous	Selenium	6010C	0.0088	BJ	mg/L	12
002	G4MW-049(050411)	Aqueous	Carbon disulfide	8260B	0.37	J	ug/L	13
002	G4MW-049(050411)	Aqueous	Toluene	8260B	0.96	J	ug/L	13
002	G4MW-049(050411)	Aqueous	Dissolved Barium	6010C	0.033		mg/L	17
002	G4MW-049(050411)	Aqueous	Dissolved Selenium	6010C	0.0027	BJ	mg/L	17
002	G4MW-049(050411)	Aqueous	Barium	6010C	0.037		mg/L	18
002	G4MW-049(050411)	Aqueous	Chromium	6010C	0.0045	J	mg/L	18
002	G4MW-049(050411)	Aqueous	Selenium	6010C	0.0047	BJ	mg/L	18
003	G4MW-050(050611)	Aqueous	Dissolved Arsenic	6010C	0.0090	BJ	mg/L	23
003	G4MW-050(050611)	Aqueous	Dissolved Lead	6010C	0.0019	J	mg/L	23
003	G4MW-050(050611)	Aqueous	Dissolved Selenium	6010C	0.0065	BJ	mg/L	23
003	G4MW-050(050611)	Aqueous	Arsenic	6010C	0.018	B	mg/L	24
003	G4MW-050(050611)	Aqueous	Barium	6010C	0.24		mg/L	24
003	G4MW-050(050611)	Aqueous	Cadmium	6010C	0.0014	J	mg/L	24
003	G4MW-050(050611)	Aqueous	Chromium	6010C	0.048		mg/L	24
003	G4MW-050(050611)	Aqueous	Lead	6010C	0.024		mg/L	24
003	G4MW-050(050611)	Aqueous	Mercury	7470A	0.000055	J	mg/L	24
003	G4MW-050(050611)	Aqueous	Selenium	6010C	0.0073	BJ	mg/L	24
004	G4MW-051(050611)	Aqueous	Benzene	8260B	0.34	J	ug/L	25
004	G4MW-051(050611)	Aqueous	2-Butanone (MEK)	8260B	25		ug/L	25
004	G4MW-051(050611)	Aqueous	Carbon disulfide	8260B	2.0		ug/L	25
004	G4MW-051(050611)	Aqueous	trans-1,2-Dichloroethene	8260B	0.60	J	ug/L	25
004	G4MW-051(050611)	Aqueous	cis-1,2-Dichloroethene	8260B	260		ug/L	25
004	G4MW-051(050611)	Aqueous	1,1-Dichloroethene	8260B	1.7		ug/L	25
004	G4MW-051(050611)	Aqueous	Tetrachloroethene	8260B	2.2		ug/L	25
004	G4MW-051(050611)	Aqueous	Trichloroethene	8260B	380		ug/L	25
004	G4MW-051(050611)	Aqueous	Dissolved Arsenic	6010C	0.0098	BJ	mg/L	29
004	G4MW-051(050611)	Aqueous	Dissolved Barium	6010C	0.045		mg/L	29
004	G4MW-051(050611)	Aqueous	Dissolved Chromium	6010C	0.0036	J	mg/L	29
004	G4MW-051(050611)	Aqueous	Dissolved Selenium	6010C	0.0042	BJ	mg/L	29
004	G4MW-051(050611)	Aqueous	Arsenic	6010C	0.023	B	mg/L	30

Sample	Sample ID	Matrix	Parameter	Method	Result	Q	Units	Page
004	G4MW-051(050611)	Aqueous	Barium	6010C	0.42		mg/L	30
004	G4MW-051(050611)	Aqueous	Cadmium	6010C	0.0037		mg/L	30
004	G4MW-051(050611)	Aqueous	Chromium	6010C	0.13		mg/L	30
004	G4MW-051(050611)	Aqueous	Lead	6010C	0.034		mg/L	30
004	G4MW-051(050611)	Aqueous	Mercury	7470A	0.000056	J	mg/L	30
004	G4MW-051(050611)	Aqueous	Selenium	6010C	0.0097	BJ	mg/L	30
005	G4MW-052(050611)	Aqueous	1,1-Dichloroethane	8260B	1.7		ug/L	31
005	G4MW-052(050611)	Aqueous	cis-1,2-Dichloroethene	8260B	2.2		ug/L	31
005	G4MW-052(050611)	Aqueous	1,1-Dichloroethene	8260B	2.6		ug/L	31
005	G4MW-052(050611)	Aqueous	Trichloroethene	8260B	5.3		ug/L	31
005	G4MW-052(050611)	Aqueous	Pyrene	8270D	0.16	J	ug/L	34
005	G4MW-052(050611)	Aqueous	bis(2-Chloroisopropyl)ether	8270D	0.34	JH	ug/L	35
005	G4MW-052(050611)	Aqueous	Dissolved Arsenic	6010C	0.0042	BJ	mg/L	37
005	G4MW-052(050611)	Aqueous	Dissolved Chromium	6010C	0.0021	J	mg/L	37
005	G4MW-052(050611)	Aqueous	Dissolved Mercury	7470A	0.000059	J	mg/L	37
005	G4MW-052(050611)	Aqueous	Arsenic	6010C	0.025	B	mg/L	38
005	G4MW-052(050611)	Aqueous	Barium	6010C	0.43		mg/L	38
005	G4MW-052(050611)	Aqueous	Cadmium	6010C	0.0014	J	mg/L	38
005	G4MW-052(050611)	Aqueous	Chromium	6010C	0.15		mg/L	38
005	G4MW-052(050611)	Aqueous	Lead	6010C	0.045		mg/L	38
005	G4MW-052(050611)	Aqueous	Selenium	6010C	0.012	B	mg/L	38
006	G4MW-053(050611)	Aqueous	Carbon disulfide	8260B	1.9		ug/L	39
006	G4MW-053(050611)	Aqueous	Toluene	8260B	0.84	J	ug/L	39
006	G4MW-053(050611)	Aqueous	bis(2-Chloroisopropyl)ether	8270D	0.13	JH	ug/L	43
006	G4MW-053(050611)	Aqueous	Dissolved Arsenic	6010C	0.024	B	mg/L	45
006	G4MW-053(050611)	Aqueous	Dissolved Barium	6010C	0.019	J	mg/L	45
006	G4MW-053(050611)	Aqueous	Dissolved Chromium	6010C	0.0026	J	mg/L	45
006	G4MW-053(050611)	Aqueous	Dissolved Selenium	6010C	0.0073	BJ	mg/L	45
006	G4MW-053(050611)	Aqueous	Arsenic	6010C	0.077	B	mg/L	46
006	G4MW-053(050611)	Aqueous	Barium	6010C	0.34		mg/L	46
006	G4MW-053(050611)	Aqueous	Cadmium	6010C	0.0023		mg/L	46
006	G4MW-053(050611)	Aqueous	Chromium	6010C	0.24		mg/L	46
006	G4MW-053(050611)	Aqueous	Lead	6010C	0.088		mg/L	46
006	G4MW-053(050611)	Aqueous	Mercury	7470A	0.000069	J	mg/L	46
006	G4MW-053(050611)	Aqueous	Selenium	6010C	0.017	B	mg/L	46
007	G4MW-054(050611)	Aqueous	Carbon disulfide	8260B	1.0		ug/L	47
007	G4MW-054(050611)	Aqueous	Dissolved Arsenic	6010C	0.0047	BJ	mg/L	51
007	G4MW-054(050611)	Aqueous	Dissolved Barium	6010C	0.037		mg/L	51
007	G4MW-054(050611)	Aqueous	Dissolved Chromium	6010C	0.0046	J	mg/L	51
007	G4MW-054(050611)	Aqueous	Dissolved Selenium	6010C	0.0043	BJ	mg/L	51
007	G4MW-054(050611)	Aqueous	Arsenic	6010C	0.017	B	mg/L	52
007	G4MW-054(050611)	Aqueous	Barium	6010C	2.1		mg/L	52
007	G4MW-054(050611)	Aqueous	Chromium	6010C	0.14		mg/L	52
007	G4MW-054(050611)	Aqueous	Lead	6010C	0.25		mg/L	52
007	G4MW-054(050611)	Aqueous	Mercury	7470A	0.0026		mg/L	52
007	G4MW-054(050611)	Aqueous	Selenium	6010C	0.017	B	mg/L	52

Sample	Sample ID	Matrix	Parameter	Method	Result	Q	Units	Page

(91 detections)

Volatile Organic Compounds by GC/MS

Client: ARCADIS U.S., Inc.
Laboratory ID: ME10010-001
Description: G4MW-048(050611)
Matrix: Aqueous
Date Sampled: 05/06/2011 1900
Date Received: 05/10/2011

Run	Prep Method	Analytical Method	Dilution	Analysis Date	Analyst	Prep Date	Batch
1	5030B	8260B	1	05/16/2011 0243	LBS		59649

Parameter	CAS Number	Analytical Method	Result	Q	PQL	MDL	Units	Run
Acetone	67-64-1	8260B	240		20	6.7	ug/L	1
Benzene	71-43-2	8260B	0.15	J	1.0	0.13	ug/L	1
Bromodichloromethane	75-27-4	8260B	ND		1.0	0.33	ug/L	1
Bromoform	75-25-2	8260B	ND		1.0	0.66	ug/L	1
Bromomethane (Methyl bromide)	74-83-9	8260B	ND		2.0	0.80	ug/L	1
2-Butanone (MEK)	78-93-3	8260B	ND		10	2.0	ug/L	1
Carbon disulfide	75-15-0	8260B	ND		1.0	0.097	ug/L	1
Carbon tetrachloride	56-23-5	8260B	ND		1.0	0.14	ug/L	1
Chlorobenzene	108-90-7	8260B	ND		2.0	0.33	ug/L	1
Chloroethane	75-00-3	8260B	ND		2.0	0.47	ug/L	1
Chloroform	67-66-3	8260B	ND		1.0	0.33	ug/L	1
Chloromethane (Methyl chloride)	74-87-3	8260B	ND		1.0	0.35	ug/L	1
Dibromochloromethane	124-48-1	8260B	ND		1.0	0.33	ug/L	1
1,4-Dichlorobenzene	106-46-7	8260B	ND		1.0	0.33	ug/L	1
1,3-Dichlorobenzene	541-73-1	8260B	ND		1.0	0.33	ug/L	1
1,2-Dichlorobenzene	95-50-1	8260B	ND		1.0	0.33	ug/L	1
1,2-Dichloroethane	107-06-2	8260B	ND		1.0	0.15	ug/L	1
1,1-Dichloroethane	75-34-3	8260B	ND		1.0	0.13	ug/L	1
trans-1,2-Dichloroethene	156-60-5	8260B	ND		1.0	0.21	ug/L	1
cis-1,2-Dichloroethene	156-59-2	8260B	0.42	J	1.0	0.12	ug/L	1
1,1-Dichloroethene	75-35-4	8260B	ND		1.0	0.16	ug/L	1
1,2-Dichloropropane	78-87-5	8260B	ND		1.0	0.19	ug/L	1
trans-1,3-Dichloropropene	10061-02-6	8260B	ND		1.0	0.11	ug/L	1
cis-1,3-Dichloropropene	10061-01-5	8260B	ND		1.0	0.092	ug/L	1
Ethylbenzene	100-41-4	8260B	ND		1.0	0.33	ug/L	1
2-Hexanone	591-78-6	8260B	ND		10	0.27	ug/L	1
Methyl tertiary butyl ether (MTBE)	1634-04-4	8260B	1.1		1.0	0.40	ug/L	1
4-Methyl-2-pentanone	108-10-1	8260B	ND		10	0.31	ug/L	1
Methylene chloride	75-09-2	8260B	ND		1.0	0.33	ug/L	1
Styrene	100-42-5	8260B	ND		1.0	0.12	ug/L	1
1,1,2,2-Tetrachloroethane	79-34-5	8260B	ND		1.0	0.16	ug/L	1
Tetrachloroethene	127-18-4	8260B	ND		1.0	0.13	ug/L	1
Toluene	108-88-3	8260B	ND		1.0	0.33	ug/L	1
1,2,4-Trichlorobenzene	120-82-1	8260B	ND		1.0	0.51	ug/L	1
1,1,2-Trichloroethane	79-00-5	8260B	ND		1.0	0.21	ug/L	1
1,1,1-Trichloroethane	71-55-6	8260B	ND		1.0	0.074	ug/L	1
Trichloroethene	79-01-6	8260B	ND		1.0	0.18	ug/L	1
Vinyl chloride	75-01-4	8260B	0.56	J	1.0	0.054	ug/L	1
Xylenes (total)	1330-20-7	8260B	ND		1.0	0.33	ug/L	1

PQL = Practical quantitation limit
B = Detected in the method blank
E = Quantitation of compound exceeded the calibration range
ND = Not detected at or above the MDL
J = Estimated result < PQL and ≥ MDL
P = The RPD between two GC columns exceeds 40%
Where applicable, all soil sample analysis are reported on a dry weight basis unless flagged with a "W"
N = Recovery is out of criteria
H = Out of holding time

Volatile Organic Compounds by GC/MS

Client: ARCADIS U.S., Inc.
Laboratory ID: ME10010-001
Description: G4MW-048(050611)
Matrix: Aqueous
Date Sampled: 05/06/2011 1900
Date Received: 05/10/2011

Surrogate	Q	Run 1 % Recovery	Acceptance Limits
1,2-Dichloroethane-d4		91	70-130
Bromofluorobenzene		96	70-130
Toluene-d8		99	70-130

PQL = Practical quantitation limit
B = Detected in the method blank
E = Quantitation of compound exceeded the calibration range
ND = Not detected at or above the MDL
J = Estimated result < PQL and ≥ MDL
P = The RPD between two GC columns exceeds 40%
Where applicable, all soil sample analysis are reported on a dry weight basis unless flagged with a "W"
N = Recovery is out of criteria
H = Out of holding time

Semivolatile Organic Compounds by GC/MS

Client: ARCADIS U.S., Inc.
Laboratory ID: ME10010-001
Description: G4MW-048(050611)
Matrix: Aqueous
Date Sampled: 05/06/2011 1900
Date Received: 05/10/2011

Run	Prep Method	Analytical Method	Dilution	Analysis Date	Analyst	Prep Date	Batch
1	3520C	8270D	1	05/16/2011 1739	JGH	05/11/2011 1331	59361

Parameter	CAS Number	Analytical Method	Result	Q	PQL	MDL	Units	Run
Acenaphthene	83-32-9	8270D	ND		1.0	0.090	ug/L	1
Acenaphthylene	208-96-8	8270D	ND		1.0	0.16	ug/L	1
Anthracene	120-12-7	8270D	ND		1.0	0.13	ug/L	1
Benzo(a)anthracene	56-55-3	8270D	ND		1.0	0.15	ug/L	1
Benzo(a)pyrene	50-32-8	8270D	ND		1.0	0.16	ug/L	1
Benzo(b)fluoranthene	205-99-2	8270D	ND		1.0	0.20	ug/L	1
Benzo(g,h,i)perylene	191-24-2	8270D	ND		1.0	0.23	ug/L	1
Benzo(k)fluoranthene	207-08-9	8270D	ND		1.0	0.12	ug/L	1
4-Bromophenyl phenyl ether	101-55-3	8270D	ND		1.0	0.12	ug/L	1
Butyl benzyl phthalate	85-68-7	8270D	ND		5.0	1.7	ug/L	1
Carbazole	86-74-8	8270D	ND		1.0	0.25	ug/L	1
4-Chloro-3-methyl phenol	59-50-7	8270D	ND		1.0	0.22	ug/L	1
4-Chloroaniline	106-47-8	8270D	ND		1.0	0.13	ug/L	1
bis(2-Chloroethoxy)methane	111-91-1	8270D	ND		1.0	0.13	ug/L	1
bis(2-Chloroisopropyl)ether	108-60-1	8270D	ND		1.0	0.080	ug/L	1
2-Chloronaphthalene	91-58-7	8270D	ND		1.0	0.12	ug/L	1
2-Chlorophenol	95-57-8	8270D	ND		1.0	0.13	ug/L	1
4-Chlorophenyl phenyl ether	7005-72-3	8270D	ND		1.0	0.11	ug/L	1
Chrysene	218-01-9	8270D	ND		1.0	0.12	ug/L	1
Dibenzo(a,h)anthracene	53-70-3	8270D	ND		1.0	0.13	ug/L	1
Dibenzofuran	132-64-9	8270D	ND		1.0	0.16	ug/L	1
3,3'-Dichlorobenzidine	91-94-1	8270D	ND		5.0	0.81	ug/L	1
2,4-Dichlorophenol	120-83-2	8270D	ND		1.0	0.15	ug/L	1
Diethylphthalate	84-66-2	8270D	ND		5.0	1.7	ug/L	1
Dimethyl phthalate	131-11-3	8270D	ND		5.0	1.7	ug/L	1
2,4-Dimethylphenol	105-67-9	8270D	ND		1.0	0.31	ug/L	1
Di-n-butyl phthalate	84-74-2	8270D	ND		5.0	1.7	ug/L	1
4,6-Dinitro-2-methylphenol	534-52-1	8270D	ND		5.0	1.5	ug/L	1
2,4-Dinitrophenol	51-28-5	8270D	ND		5.0	0.25	ug/L	1
2,4-Dinitrotoluene	121-14-2	8270D	ND		2.0	0.45	ug/L	1
2,6-Dinitrotoluene	606-20-2	8270D	ND		2.0	0.40	ug/L	1
Di-n-octylphthalate	117-84-0	8270D	ND		5.0	1.7	ug/L	1
bis(2-Ethylhexyl)phthalate	117-81-7	8270D	ND		5.0	1.7	ug/L	1
Fluoranthene	206-44-0	8270D	ND		1.0	0.21	ug/L	1
Fluorene	86-73-7	8270D	ND		1.0	0.10	ug/L	1
Hexachlorobenzene	118-74-1	8270D	ND		1.0	0.21	ug/L	1
Hexachlorobutadiene	87-68-3	8270D	ND		1.0	0.090	ug/L	1
Hexachlorocyclopentadiene	77-47-4	8270D	ND		5.0	0.23	ug/L	1
Hexachloroethane	67-72-1	8270D	ND		1.0	0.11	ug/L	1
Indeno(1,2,3-c,d)pyrene	193-39-5	8270D	ND		1.0	0.23	ug/L	1
Isophorone	78-59-1	8270D	ND		1.0	0.080	ug/L	1
2-Methylnaphthalene	91-57-6	8270D	ND		1.0	0.080	ug/L	1
2-Methylphenol	95-48-7	8270D	ND		1.0	0.17	ug/L	1
3 & 4-Methylphenol	106-44-5	8270D	ND		2.0	0.57	ug/L	1

PQL = Practical quantitation limit
B = Detected in the method blank
E = Quantitation of compound exceeded the calibration range
ND = Not detected at or above the MDL
J = Estimated result < PQL and ≥ MDL
P = The RPD between two GC columns exceeds 40%
Where applicable, all soil sample analysis are reported on a dry weight basis unless flagged with a "W"
N = Recovery is out of criteria
H = Out of holding time

Semivolatile Organic Compounds by GC/MS

Client: ARCADIS U.S., Inc.
Laboratory ID: ME10010-001
Description: G4MW-048(050611)
Matrix: Aqueous
Date Sampled: 05/06/2011 1900
Date Received: 05/10/2011

Run	Prep Method	Analytical Method	Dilution	Analysis Date	Analyst	Prep Date	Batch
1	3520C	8270D	1	05/16/2011 1739	JGH	05/11/2011 1331	59361

Parameter	CAS Number	Analytical Method	Result	Q	PQL	MDL	Units	Run
Naphthalene	91-20-3	8270D	ND		1.0	0.070	ug/L	1
2-Nitroaniline	88-74-4	8270D	ND		2.0	0.55	ug/L	1
3-Nitroaniline	99-09-2	8270D	ND		2.0	0.77	ug/L	1
4-Nitroaniline	100-01-6	8270D	ND		2.0	0.39	ug/L	1
Nitrobenzene	98-95-3	8270D	ND		1.0	0.10	ug/L	1
2-Nitrophenol	88-75-5	8270D	ND		2.0	0.27	ug/L	1
4-Nitrophenol	100-02-7	8270D	ND		5.0	0.64	ug/L	1
N-Nitrosodi-n-propylamine	621-64-7	8270D	ND		1.0	0.080	ug/L	1
N-Nitrosodiphenylamine (Diphenylamine)	86-30-6	8270D	ND		1.0	0.38	ug/L	1
Pentachlorophenol	87-86-5	8270D	ND		5.0	0.54	ug/L	1
Phenanthrene	85-01-8	8270D	ND		1.0	0.18	ug/L	1
Phenol	108-95-2	8270D	ND		1.0	0.11	ug/L	1
Pyrene	129-00-0	8270D	ND		1.0	0.16	ug/L	1
2,4,5-Trichlorophenol	95-95-4	8270D	ND		1.0	0.18	ug/L	1
2,4,6-Trichlorophenol	88-06-2	8270D	ND		1.0	0.22	ug/L	1

Surrogate	Q	Run 1 % Recovery	Acceptance Limits
2-Fluorobiphenyl		46	37-129
2-Fluorophenol		54	24-127
Nitrobenzene-d5		52	38-127
Phenol-d5		57	28-128
Terphenyl-d14	N	4.7	10-148
2,4,6-Tribromophenol		55	41-144

PQL = Practical quantitation limit
B = Detected in the method blank
E = Quantitation of compound exceeded the calibration range
ND = Not detected at or above the MDL
J = Estimated result < PQL and ≥ MDL
P = The RPD between two GC columns exceeds 40%
Where applicable, all soil sample analysis are reported on a dry weight basis unless flagged with a "W"
N = Recovery is out of criteria
H = Out of holding time

Dissolved RCRA Metals

Client: ARCADIS U.S., Inc.
Laboratory ID: ME10010-001
Description: G4MW-048(050611)
Matrix: Aqueous
Date Sampled: 05/06/2011 1900
Date Received: 05/10/2011

Run	Prep Method	Analytical Method	Dilution	Analysis Date	Analyst	Prep Date	Batch
1		7470A	1	05/13/2011 0908	KJC	05/12/2011 1630	59491
1	3005A	6010C	1	05/11/2011 1756	CDF	05/10/2011 1702	59321

Parameter	CAS Number	Analytical Method	Result	Q	PQL	MDL	Units	Run
Dissolved Arsenic	7440-38-2	6010C	ND		0.010	0.0040	mg/L	1
Dissolved Barium	7440-39-3	6010C	0.025		0.025	0.0075	mg/L	1
Dissolved Cadmium	7440-43-9	6010C	ND		0.0020	0.00060	mg/L	1
Dissolved Chromium	7440-47-3	6010C	0.0023	J	0.0050	0.0021	mg/L	1
Dissolved Lead	7439-92-1	6010C	ND		0.010	0.0019	mg/L	1
Dissolved Mercury	7439-97-6	7470A	ND		0.00010	0.000053	mg/L	1
Dissolved Selenium	7782-49-2	6010C	0.0077	BJ	0.010	0.0026	mg/L	1
Dissolved Silver	7440-22-4	6010C	ND		0.0050	0.00040	mg/L	1

PQL = Practical quantitation limit
B = Detected in the method blank
E = Quantitation of compound exceeded the calibration range
ND = Not detected at or above the MDL
J = Estimated result < PQL and ≥ MDL
P = The RPD between two GC columns exceeds 40%
Where applicable, all soil sample analysis are reported on a dry weight basis unless flagged with a "W"
N = Recovery is out of criteria
H = Out of holding time

RCRA Metals

Client: ARCADIS U.S., Inc.
Laboratory ID: ME10010-001
Description: G4MW-048(050611)
Matrix: Aqueous
Date Sampled: 05/06/2011 1900
Date Received: 05/10/2011

Run	Prep Method	Analytical Method	Dilution	Analysis Date	Analyst	Prep Date	Batch
1		7470A	1	05/13/2011 0905	KJC	05/12/2011 1630	59491
1	3005A	6010C	1	05/11/2011 1750	CDF	05/10/2011 1702	59321

Parameter	CAS Number	Analytical Method	Result	Q	PQL	MDL	Units	Run
Arsenic	7440-38-2	6010C	0.0064	BJ	0.010	0.0040	mg/L	1
Barium	7440-39-3	6010C	0.25		0.025	0.0075	mg/L	1
Cadmium	7440-43-9	6010C	0.00082	J	0.0020	0.00060	mg/L	1
Chromium	7440-47-3	6010C	0.0088		0.0050	0.0021	mg/L	1
Lead	7439-92-1	6010C	0.048		0.010	0.0019	mg/L	1
Mercury	7439-97-6	7470A	0.0024		0.00010	0.000053	mg/L	1
Selenium	7782-49-2	6010C	0.0088	BJ	0.010	0.0026	mg/L	1
Silver	7440-22-4	6010C	ND		0.0050	0.00040	mg/L	1

PQL = Practical quantitation limit
B = Detected in the method blank
E = Quantitation of compound exceeded the calibration range
ND = Not detected at or above the MDL
J = Estimated result < PQL and ≥ MDL
P = The RPD between two GC columns exceeds 40%
Where applicable, all soil sample analysis are reported on a dry weight basis unless flagged with a "W"
N = Recovery is out of criteria
H = Out of holding time

Volatile Organic Compounds by GC/MS

Client: ARCADIS U.S., Inc.
Laboratory ID: ME10010-002
Description: G4MW-049(050411)
Matrix: Aqueous
Date Sampled: 05/04/2011 2030
Date Received: 05/10/2011

Run	Prep Method	Analytical Method	Dilution	Analysis Date	Analyst	Prep Date	Batch
1	5030B	8260B	1	05/16/2011 0304	LBS		59649

Parameter	CAS Number	Analytical Method	Result	Q	PQL	MDL	Units	Run
Acetone	67-64-1	8260B	ND		20	6.7	ug/L	1
Benzene	71-43-2	8260B	ND		1.0	0.13	ug/L	1
Bromodichloromethane	75-27-4	8260B	ND		1.0	0.33	ug/L	1
Bromoform	75-25-2	8260B	ND		1.0	0.66	ug/L	1
Bromomethane (Methyl bromide)	74-83-9	8260B	ND		2.0	0.80	ug/L	1
2-Butanone (MEK)	78-93-3	8260B	ND		10	2.0	ug/L	1
Carbon disulfide	75-15-0	8260B	0.37	J	1.0	0.097	ug/L	1
Carbon tetrachloride	56-23-5	8260B	ND		1.0	0.14	ug/L	1
Chlorobenzene	108-90-7	8260B	ND		2.0	0.33	ug/L	1
Chloroethane	75-00-3	8260B	ND		2.0	0.47	ug/L	1
Chloroform	67-66-3	8260B	ND		1.0	0.33	ug/L	1
Chloromethane (Methyl chloride)	74-87-3	8260B	ND		1.0	0.35	ug/L	1
Dibromochloromethane	124-48-1	8260B	ND		1.0	0.33	ug/L	1
1,4-Dichlorobenzene	106-46-7	8260B	ND		1.0	0.33	ug/L	1
1,3-Dichlorobenzene	541-73-1	8260B	ND		1.0	0.33	ug/L	1
1,2-Dichlorobenzene	95-50-1	8260B	ND		1.0	0.33	ug/L	1
1,2-Dichloroethane	107-06-2	8260B	ND		1.0	0.15	ug/L	1
1,1-Dichloroethane	75-34-3	8260B	ND		1.0	0.13	ug/L	1
trans-1,2-Dichloroethene	156-60-5	8260B	ND		1.0	0.21	ug/L	1
cis-1,2-Dichloroethene	156-59-2	8260B	ND		1.0	0.12	ug/L	1
1,1-Dichloroethene	75-35-4	8260B	ND		1.0	0.16	ug/L	1
1,2-Dichloropropane	78-87-5	8260B	ND		1.0	0.19	ug/L	1
trans-1,3-Dichloropropene	10061-02-6	8260B	ND		1.0	0.11	ug/L	1
cis-1,3-Dichloropropene	10061-01-5	8260B	ND		1.0	0.092	ug/L	1
Ethylbenzene	100-41-4	8260B	ND		1.0	0.33	ug/L	1
2-Hexanone	591-78-6	8260B	ND		10	0.27	ug/L	1
Methyl tertiary butyl ether (MTBE)	1634-04-4	8260B	ND		1.0	0.40	ug/L	1
4-Methyl-2-pentanone	108-10-1	8260B	ND		10	0.31	ug/L	1
Methylene chloride	75-09-2	8260B	ND		1.0	0.33	ug/L	1
Styrene	100-42-5	8260B	ND		1.0	0.12	ug/L	1
1,1,2,2-Tetrachloroethane	79-34-5	8260B	ND		1.0	0.16	ug/L	1
Tetrachloroethene	127-18-4	8260B	ND		1.0	0.13	ug/L	1
Toluene	108-88-3	8260B	0.96	J	1.0	0.33	ug/L	1
1,2,4-Trichlorobenzene	120-82-1	8260B	ND		1.0	0.51	ug/L	1
1,1,2-Trichloroethane	79-00-5	8260B	ND		1.0	0.21	ug/L	1
1,1,1-Trichloroethane	71-55-6	8260B	ND		1.0	0.074	ug/L	1
Trichloroethene	79-01-6	8260B	ND		1.0	0.18	ug/L	1
Vinyl chloride	75-01-4	8260B	ND		1.0	0.054	ug/L	1
Xylenes (total)	1330-20-7	8260B	ND		1.0	0.33	ug/L	1

PQL = Practical quantitation limit
B = Detected in the method blank
E = Quantitation of compound exceeded the calibration range
ND = Not detected at or above the MDL
J = Estimated result < PQL and ≥ MDL
P = The RPD between two GC columns exceeds 40%
Where applicable, all soil sample analysis are reported on a dry weight basis unless flagged with a "W"
N = Recovery is out of criteria
H = Out of holding time

Volatile Organic Compounds by GC/MS

Client: ARCADIS U.S., Inc.
Laboratory ID: ME10010-002
Description: G4MW-049(050411)
Matrix: Aqueous
Date Sampled: 05/04/2011 2030
Date Received: 05/10/2011

Surrogate	Q	Run 1 % Recovery	Acceptance Limits
1,2-Dichloroethane-d4		98	70-130
Bromofluorobenzene		95	70-130
Toluene-d8		96	70-130

PQL = Practical quantitation limit
B = Detected in the method blank
E = Quantitation of compound exceeded the calibration range
ND = Not detected at or above the MDL
J = Estimated result < PQL and ≥ MDL
P = The RPD between two GC columns exceeds 40%
Where applicable, all soil sample analysis are reported on a dry weight basis unless flagged with a "W"
N = Recovery is out of criteria
H = Out of holding time

Semivolatile Organic Compounds by GC/MS

Client: ARCADIS U.S., Inc.
Laboratory ID: ME10010-002
Description: G4MW-049(050411)
Matrix: Aqueous
Date Sampled: 05/04/2011 2030
Date Received: 05/10/2011

Run	Prep Method	Analytical Method	Dilution	Analysis Date	Analyst	Prep Date	Batch
1	3520C	8270D	1	05/16/2011 1836	JGH	05/11/2011 1331	59361

Parameter	CAS Number	Analytical Method	Result	Q	PQL	MDL	Units	Run
Acenaphthene	83-32-9	8270D	ND		1.0	0.090	ug/L	1
Acenaphthylene	208-96-8	8270D	ND		1.0	0.16	ug/L	1
Anthracene	120-12-7	8270D	ND		1.0	0.13	ug/L	1
Benzo(a)anthracene	56-55-3	8270D	ND		1.0	0.15	ug/L	1
Benzo(a)pyrene	50-32-8	8270D	ND		1.0	0.16	ug/L	1
Benzo(b)fluoranthene	205-99-2	8270D	ND		1.0	0.20	ug/L	1
Benzo(g,h,i)perylene	191-24-2	8270D	ND		1.0	0.23	ug/L	1
Benzo(k)fluoranthene	207-08-9	8270D	ND		1.0	0.12	ug/L	1
4-Bromophenyl phenyl ether	101-55-3	8270D	ND		1.0	0.12	ug/L	1
Butyl benzyl phthalate	85-68-7	8270D	ND		5.0	1.7	ug/L	1
Carbazole	86-74-8	8270D	ND		1.0	0.25	ug/L	1
4-Chloro-3-methyl phenol	59-50-7	8270D	ND		1.0	0.22	ug/L	1
4-Chloroaniline	106-47-8	8270D	ND		1.0	0.13	ug/L	1
bis(2-Chloroethoxy)methane	111-91-1	8270D	ND		1.0	0.13	ug/L	1
bis(2-Chloroisopropyl)ether	108-60-1	8270D	ND		1.0	0.080	ug/L	1
2-Chloronaphthalene	91-58-7	8270D	ND		1.0	0.12	ug/L	1
2-Chlorophenol	95-57-8	8270D	ND		1.0	0.13	ug/L	1
4-Chlorophenyl phenyl ether	7005-72-3	8270D	ND		1.0	0.11	ug/L	1
Chrysene	218-01-9	8270D	ND		1.0	0.12	ug/L	1
Dibenzo(a,h)anthracene	53-70-3	8270D	ND		1.0	0.13	ug/L	1
Dibenzofuran	132-64-9	8270D	ND		1.0	0.16	ug/L	1
3,3'-Dichlorobenzidine	91-94-1	8270D	ND		5.0	0.81	ug/L	1
2,4-Dichlorophenol	120-83-2	8270D	ND		1.0	0.15	ug/L	1
Diethylphthalate	84-66-2	8270D	ND		5.0	1.7	ug/L	1
Dimethyl phthalate	131-11-3	8270D	ND		5.0	1.7	ug/L	1
2,4-Dimethylphenol	105-67-9	8270D	ND		1.0	0.31	ug/L	1
Di-n-butyl phthalate	84-74-2	8270D	ND		5.0	1.7	ug/L	1
4,6-Dinitro-2-methylphenol	534-52-1	8270D	ND		5.0	1.5	ug/L	1
2,4-Dinitrophenol	51-28-5	8270D	ND		5.0	0.25	ug/L	1
2,4-Dinitrotoluene	121-14-2	8270D	ND		2.0	0.45	ug/L	1
2,6-Dinitrotoluene	606-20-2	8270D	ND		2.0	0.40	ug/L	1
Di-n-octylphthalate	117-84-0	8270D	ND		5.0	1.7	ug/L	1
bis(2-Ethylhexyl)phthalate	117-81-7	8270D	ND		5.0	1.7	ug/L	1
Fluoranthene	206-44-0	8270D	ND		1.0	0.21	ug/L	1
Fluorene	86-73-7	8270D	ND		1.0	0.10	ug/L	1
Hexachlorobenzene	118-74-1	8270D	ND		1.0	0.21	ug/L	1
Hexachlorobutadiene	87-68-3	8270D	ND		1.0	0.090	ug/L	1
Hexachlorocyclopentadiene	77-47-4	8270D	ND		5.0	0.23	ug/L	1
Hexachloroethane	67-72-1	8270D	ND		1.0	0.11	ug/L	1
Indeno(1,2,3-c,d)pyrene	193-39-5	8270D	ND		1.0	0.23	ug/L	1
Isophorone	78-59-1	8270D	ND		1.0	0.080	ug/L	1
2-Methylnaphthalene	91-57-6	8270D	ND		1.0	0.080	ug/L	1
2-Methylphenol	95-48-7	8270D	ND		1.0	0.17	ug/L	1
3 & 4-Methylphenol	106-44-5	8270D	ND		2.0	0.57	ug/L	1

PQL = Practical quantitation limit
B = Detected in the method blank
E = Quantitation of compound exceeded the calibration range
ND = Not detected at or above the MDL
J = Estimated result < PQL and ≥ MDL
P = The RPD between two GC columns exceeds 40%
Where applicable, all soil sample analysis are reported on a dry weight basis unless flagged with a "W"
N = Recovery is out of criteria
H = Out of holding time

Semivolatile Organic Compounds by GC/MS

Client: ARCADIS U.S., Inc.
Laboratory ID: ME10010-002
Description: G4MW-049(050411)
Matrix: Aqueous
Date Sampled: 05/04/2011 2030
Date Received: 05/10/2011

Run	Prep Method	Analytical Method	Dilution	Analysis Date	Analyst	Prep Date	Batch
1	3520C	8270D	1	05/16/2011 1836	JGH	05/11/2011 1331	59361

Parameter	CAS Number	Analytical Method	Result	Q	PQL	MDL	Units	Run
Naphthalene	91-20-3	8270D	ND		1.0	0.070	ug/L	1
2-Nitroaniline	88-74-4	8270D	ND		2.0	0.55	ug/L	1
3-Nitroaniline	99-09-2	8270D	ND		2.0	0.77	ug/L	1
4-Nitroaniline	100-01-6	8270D	ND		2.0	0.39	ug/L	1
Nitrobenzene	98-95-3	8270D	ND		1.0	0.10	ug/L	1
2-Nitrophenol	88-75-5	8270D	ND		2.0	0.27	ug/L	1
4-Nitrophenol	100-02-7	8270D	ND		5.0	0.64	ug/L	1
N-Nitrosodi-n-propylamine	621-64-7	8270D	ND		1.0	0.080	ug/L	1
N-Nitrosodiphenylamine (Diphenylamine)	86-30-6	8270D	ND		1.0	0.38	ug/L	1
Pentachlorophenol	87-86-5	8270D	ND		5.0	0.54	ug/L	1
Phenanthrene	85-01-8	8270D	ND		1.0	0.18	ug/L	1
Phenol	108-95-2	8270D	ND		1.0	0.11	ug/L	1
Pyrene	129-00-0	8270D	ND		1.0	0.16	ug/L	1
2,4,5-Trichlorophenol	95-95-4	8270D	ND		1.0	0.18	ug/L	1
2,4,6-Trichlorophenol	88-06-2	8270D	ND		1.0	0.22	ug/L	1

Surrogate	Q	Run 1 % Recovery	Acceptance Limits
2-Fluorobiphenyl		66	37-129
2-Fluorophenol		64	24-127
Nitrobenzene-d5		63	38-127
Phenol-d5		66	28-128
Terphenyl-d14		45	10-148
2,4,6-Tribromophenol		73	41-144

PQL = Practical quantitation limit
B = Detected in the method blank
E = Quantitation of compound exceeded the calibration range
ND = Not detected at or above the MDL
J = Estimated result < PQL and ≥ MDL
P = The RPD between two GC columns exceeds 40%
Where applicable, all soil sample analysis are reported on a dry weight basis unless flagged with a "W"
N = Recovery is out of criteria
H = Out of holding time

Dissolved RCRA Metals

Client: ARCADIS U.S., Inc.
Description: G4MW-049(050411)
Date Sampled: 05/04/2011 2030
Date Received: 05/10/2011

Laboratory ID: ME10010-002
Matrix: Aqueous

Run	Prep Method	Analytical Method	Dilution	Analysis Date	Analyst	Prep Date	Batch
1		7470A	1	05/13/2011 0914	KJC	05/12/2011 1630	59491
1	3005A	6010C	1	05/11/2011 1810	CDF	05/10/2011 1702	59321

Parameter	CAS Number	Analytical Method	Result	Q	PQL	MDL	Units	Run
Dissolved Arsenic	7440-38-2	6010C	ND		0.010	0.0040	mg/L	1
Dissolved Barium	7440-39-3	6010C	0.033		0.025	0.0075	mg/L	1
Dissolved Cadmium	7440-43-9	6010C	ND		0.0020	0.00060	mg/L	1
Dissolved Chromium	7440-47-3	6010C	ND		0.0050	0.0021	mg/L	1
Dissolved Lead	7439-92-1	6010C	ND		0.010	0.0019	mg/L	1
Dissolved Mercury	7439-97-6	7470A	ND		0.00010	0.000053	mg/L	1
Dissolved Selenium	7782-49-2	6010C	0.0027	BJ	0.010	0.0026	mg/L	1
Dissolved Silver	7440-22-4	6010C	ND		0.0050	0.00040	mg/L	1

PQL = Practical quantitation limit
ND = Not detected at or above the MDL
Where applicable, all soil sample analysis are reported on a dry weight basis unless flagged with a "W"
B = Detected in the method blank
J = Estimated result < PQL and ≥ MDL
E = Quantitation of compound exceeded the calibration range
P = The RPD between two GC columns exceeds 40%
N = Recovery is out of criteria
H = Out of holding time

RCRA Metals

Client: ARCADIS U.S., Inc.
Laboratory ID: ME10010-002
Description: G4MW-049(050411)
Matrix: Aqueous
Date Sampled: 05/04/2011 2030
Date Received: 05/10/2011

Run	Prep Method	Analytical Method	Dilution	Analysis Date	Analyst	Prep Date	Batch
1		7470A	1	05/13/2011 0910	KJC	05/12/2011 1630	59491
1	3005A	6010C	1	05/11/2011 1803	CDF	05/10/2011 1702	59321

Parameter	CAS Number	Analytical Method	Result	Q	PQL	MDL	Units	Run
Arsenic	7440-38-2	6010C	ND		0.010	0.0040	mg/L	1
Barium	7440-39-3	6010C	0.037		0.025	0.0075	mg/L	1
Cadmium	7440-43-9	6010C	ND		0.0020	0.00060	mg/L	1
Chromium	7440-47-3	6010C	0.0045	J	0.0050	0.0021	mg/L	1
Lead	7439-92-1	6010C	ND		0.010	0.0019	mg/L	1
Mercury	7439-97-6	7470A	ND		0.00010	0.000053	mg/L	1
Selenium	7782-49-2	6010C	0.0047	BJ	0.010	0.0026	mg/L	1
Silver	7440-22-4	6010C	ND		0.0050	0.00040	mg/L	1

PQL = Practical quantitation limit
B = Detected in the method blank
E = Quantitation of compound exceeded the calibration range
ND = Not detected at or above the MDL
J = Estimated result < PQL and ≥ MDL
P = The RPD between two GC columns exceeds 40%
Where applicable, all soil sample analysis are reported on a dry weight basis unless flagged with a "W"
N = Recovery is out of criteria
H = Out of holding time

Volatile Organic Compounds by GC/MS

Client: ARCADIS U.S., Inc.
Laboratory ID: ME10010-003
Description: G4MW-050(050611)
Matrix: Aqueous
Date Sampled: 05/06/2011 1415
Date Received: 05/10/2011

Run	Prep Method	Analytical Method	Dilution	Analysis Date	Analyst	Prep Date	Batch
1	5030B	8260B	1	05/16/2011 0325	LBS		59649

Parameter	CAS Number	Analytical Method	Result	Q	PQL	MDL	Units	Run
Acetone	67-64-1	8260B	ND		20	6.7	ug/L	1
Benzene	71-43-2	8260B	ND		1.0	0.13	ug/L	1
Bromodichloromethane	75-27-4	8260B	ND		1.0	0.33	ug/L	1
Bromoform	75-25-2	8260B	ND		1.0	0.66	ug/L	1
Bromomethane (Methyl bromide)	74-83-9	8260B	ND		2.0	0.80	ug/L	1
2-Butanone (MEK)	78-93-3	8260B	ND		10	2.0	ug/L	1
Carbon disulfide	75-15-0	8260B	ND		1.0	0.097	ug/L	1
Carbon tetrachloride	56-23-5	8260B	ND		1.0	0.14	ug/L	1
Chlorobenzene	108-90-7	8260B	ND		2.0	0.33	ug/L	1
Chloroethane	75-00-3	8260B	ND		2.0	0.47	ug/L	1
Chloroform	67-66-3	8260B	ND		1.0	0.33	ug/L	1
Chloromethane (Methyl chloride)	74-87-3	8260B	ND		1.0	0.35	ug/L	1
Dibromochloromethane	124-48-1	8260B	ND		1.0	0.33	ug/L	1
1,4-Dichlorobenzene	106-46-7	8260B	ND		1.0	0.33	ug/L	1
1,3-Dichlorobenzene	541-73-1	8260B	ND		1.0	0.33	ug/L	1
1,2-Dichlorobenzene	95-50-1	8260B	ND		1.0	0.33	ug/L	1
1,2-Dichloroethane	107-06-2	8260B	ND		1.0	0.15	ug/L	1
1,1-Dichloroethane	75-34-3	8260B	ND		1.0	0.13	ug/L	1
trans-1,2-Dichloroethene	156-60-5	8260B	ND		1.0	0.21	ug/L	1
cis-1,2-Dichloroethene	156-59-2	8260B	ND		1.0	0.12	ug/L	1
1,1-Dichloroethene	75-35-4	8260B	ND		1.0	0.16	ug/L	1
1,2-Dichloropropane	78-87-5	8260B	ND		1.0	0.19	ug/L	1
trans-1,3-Dichloropropene	10061-02-6	8260B	ND		1.0	0.11	ug/L	1
cis-1,3-Dichloropropene	10061-01-5	8260B	ND		1.0	0.092	ug/L	1
Ethylbenzene	100-41-4	8260B	ND		1.0	0.33	ug/L	1
2-Hexanone	591-78-6	8260B	ND		10	0.27	ug/L	1
Methyl tertiary butyl ether (MTBE)	1634-04-4	8260B	ND		1.0	0.40	ug/L	1
4-Methyl-2-pentanone	108-10-1	8260B	ND		10	0.31	ug/L	1
Methylene chloride	75-09-2	8260B	ND		1.0	0.33	ug/L	1
Styrene	100-42-5	8260B	ND		1.0	0.12	ug/L	1
1,1,2,2-Tetrachloroethane	79-34-5	8260B	ND		1.0	0.16	ug/L	1
Tetrachloroethene	127-18-4	8260B	ND		1.0	0.13	ug/L	1
Toluene	108-88-3	8260B	ND		1.0	0.33	ug/L	1
1,2,4-Trichlorobenzene	120-82-1	8260B	ND		1.0	0.51	ug/L	1
1,1,2-Trichloroethane	79-00-5	8260B	ND		1.0	0.21	ug/L	1
1,1,1-Trichloroethane	71-55-6	8260B	ND		1.0	0.074	ug/L	1
Trichloroethene	79-01-6	8260B	ND		1.0	0.18	ug/L	1
Vinyl chloride	75-01-4	8260B	ND		1.0	0.054	ug/L	1
Xylenes (total)	1330-20-7	8260B	ND		1.0	0.33	ug/L	1

PQL = Practical quantitation limit
B = Detected in the method blank
E = Quantitation of compound exceeded the calibration range
ND = Not detected at or above the MDL
J = Estimated result < PQL and ≥ MDL
P = The RPD between two GC columns exceeds 40%
Where applicable, all soil sample analysis are reported on a dry weight basis unless flagged with a "W"
N = Recovery is out of criteria
H = Out of holding time

Volatile Organic Compounds by GC/MS

Client: ARCADIS U.S., Inc.
Laboratory ID: ME10010-003
Description: G4MW-050(050611)
Matrix: Aqueous
Date Sampled: 05/06/2011 1415
Date Received: 05/10/2011

Surrogate	Q	Run 1 % Recovery	Acceptance Limits
1,2-Dichloroethane-d4		97	70-130
Bromofluorobenzene		94	70-130
Toluene-d8		97	70-130

PQL = Practical quantitation limit
B = Detected in the method blank
E = Quantitation of compound exceeded the calibration range
ND = Not detected at or above the MDL
J = Estimated result < PQL and ≥ MDL
P = The RPD between two GC columns exceeds 40%
Where applicable, all soil sample analysis are reported on a dry weight basis unless flagged with a "W"
N = Recovery is out of criteria
H = Out of holding time

Semivolatile Organic Compounds by GC/MS

Client: ARCADIS U.S., Inc.
Laboratory ID: ME10010-003
Description: G4MW-050(050611)
Matrix: Aqueous
Date Sampled: 05/06/2011 1415
Date Received: 05/10/2011

Run	Prep Method	Analytical Method	Dilution	Analysis Date	Analyst	Prep Date	Batch
1	3520C	8270D	1	05/16/2011 1855	JGH	05/11/2011 1331	59361

Parameter	CAS Number	Analytical Method	Result	Q	PQL	MDL	Units	Run
Acenaphthene	83-32-9	8270D	ND		1.0	0.091	ug/L	1
Acenaphthylene	208-96-8	8270D	ND		1.0	0.16	ug/L	1
Anthracene	120-12-7	8270D	ND		1.0	0.13	ug/L	1
Benzo(a)anthracene	56-55-3	8270D	ND		1.0	0.15	ug/L	1
Benzo(a)pyrene	50-32-8	8270D	ND		1.0	0.16	ug/L	1
Benzo(b)fluoranthene	205-99-2	8270D	ND		1.0	0.20	ug/L	1
Benzo(g,h,i)perylene	191-24-2	8270D	ND		1.0	0.23	ug/L	1
Benzo(k)fluoranthene	207-08-9	8270D	ND		1.0	0.12	ug/L	1
4-Bromophenyl phenyl ether	101-55-3	8270D	ND		1.0	0.12	ug/L	1
Butyl benzyl phthalate	85-68-7	8270D	ND		5.1	1.7	ug/L	1
Carbazole	86-74-8	8270D	ND		1.0	0.25	ug/L	1
4-Chloro-3-methyl phenol	59-50-7	8270D	ND		1.0	0.22	ug/L	1
4-Chloroaniline	106-47-8	8270D	ND		1.0	0.13	ug/L	1
bis(2-Chloroethoxy)methane	111-91-1	8270D	ND		1.0	0.13	ug/L	1
bis(2-Chloroisopropyl)ether	108-60-1	8270D	ND		1.0	0.081	ug/L	1
2-Chloronaphthalene	91-58-7	8270D	ND		1.0	0.12	ug/L	1
2-Chlorophenol	95-57-8	8270D	ND		1.0	0.13	ug/L	1
4-Chlorophenyl phenyl ether	7005-72-3	8270D	ND		1.0	0.11	ug/L	1
Chrysene	218-01-9	8270D	ND		1.0	0.12	ug/L	1
Dibenzo(a,h)anthracene	53-70-3	8270D	ND		1.0	0.13	ug/L	1
Dibenzofuran	132-64-9	8270D	ND		1.0	0.16	ug/L	1
3,3'-Dichlorobenzidine	91-94-1	8270D	ND		5.1	0.82	ug/L	1
2,4-Dichlorophenol	120-83-2	8270D	ND		1.0	0.15	ug/L	1
Diethylphthalate	84-66-2	8270D	ND		5.1	1.7	ug/L	1
Dimethyl phthalate	131-11-3	8270D	ND		5.1	1.7	ug/L	1
2,4-Dimethylphenol	105-67-9	8270D	ND		1.0	0.31	ug/L	1
Di-n-butyl phthalate	84-74-2	8270D	ND		5.1	1.7	ug/L	1
4,6-Dinitro-2-methylphenol	534-52-1	8270D	ND		5.1	1.5	ug/L	1
2,4-Dinitrophenol	51-28-5	8270D	ND		5.1	0.25	ug/L	1
2,4-Dinitrotoluene	121-14-2	8270D	ND		2.0	0.45	ug/L	1
2,6-Dinitrotoluene	606-20-2	8270D	ND		2.0	0.40	ug/L	1
Di-n-octylphthalate	117-84-0	8270D	ND		5.1	1.7	ug/L	1
bis(2-Ethylhexyl)phthalate	117-81-7	8270D	ND		5.1	1.7	ug/L	1
Fluoranthene	206-44-0	8270D	ND		1.0	0.21	ug/L	1
Fluorene	86-73-7	8270D	ND		1.0	0.10	ug/L	1
Hexachlorobenzene	118-74-1	8270D	ND		1.0	0.21	ug/L	1
Hexachlorobutadiene	87-68-3	8270D	ND		1.0	0.091	ug/L	1
Hexachlorocyclopentadiene	77-47-4	8270D	ND		5.1	0.23	ug/L	1
Hexachloroethane	67-72-1	8270D	ND		1.0	0.11	ug/L	1
Indeno(1,2,3-c,d)pyrene	193-39-5	8270D	ND		1.0	0.23	ug/L	1
Isophorone	78-59-1	8270D	ND		1.0	0.081	ug/L	1
2-Methylnaphthalene	91-57-6	8270D	ND		1.0	0.081	ug/L	1
2-Methylphenol	95-48-7	8270D	ND		1.0	0.17	ug/L	1
3 & 4-Methylphenol	106-44-5	8270D	ND		2.0	0.58	ug/L	1

PQL = Practical quantitation limit
B = Detected in the method blank
E = Quantitation of compound exceeded the calibration range
ND = Not detected at or above the MDL
J = Estimated result < PQL and ≥ MDL
P = The RPD between two GC columns exceeds 40%
Where applicable, all soil sample analysis are reported on a dry weight basis unless flagged with a "W"
N = Recovery is out of criteria
H = Out of holding time

Semivolatile Organic Compounds by GC/MS

Client: ARCADIS U.S., Inc.
Laboratory ID: ME10010-003
Description: G4MW-050(050611)
Matrix: Aqueous
Date Sampled: 05/06/2011 1415
Date Received: 05/10/2011

Run	Prep Method	Analytical Method	Dilution	Analysis Date	Analyst	Prep Date	Batch
1	3520C	8270D	1	05/16/2011 1855	JGH	05/11/2011 1331	59361

Parameter	CAS Number	Analytical Method	Result	Q	PQL	MDL	Units	Run
Naphthalene	91-20-3	8270D	ND		1.0	0.071	ug/L	1
2-Nitroaniline	88-74-4	8270D	ND		2.0	0.56	ug/L	1
3-Nitroaniline	99-09-2	8270D	ND		2.0	0.78	ug/L	1
4-Nitroaniline	100-01-6	8270D	ND		2.0	0.39	ug/L	1
Nitrobenzene	98-95-3	8270D	ND		1.0	0.10	ug/L	1
2-Nitrophenol	88-75-5	8270D	ND		2.0	0.27	ug/L	1
4-Nitrophenol	100-02-7	8270D	ND		5.1	0.65	ug/L	1
N-Nitrosodi-n-propylamine	621-64-7	8270D	ND		1.0	0.081	ug/L	1
N-Nitrosodiphenylamine (Diphenylamine)	86-30-6	8270D	ND		1.0	0.38	ug/L	1
Pentachlorophenol	87-86-5	8270D	ND		5.1	0.55	ug/L	1
Phenanthrene	85-01-8	8270D	ND		1.0	0.18	ug/L	1
Phenol	108-95-2	8270D	ND		1.0	0.11	ug/L	1
Pyrene	129-00-0	8270D	ND		1.0	0.16	ug/L	1
2,4,5-Trichlorophenol	95-95-4	8270D	ND		1.0	0.18	ug/L	1
2,4,6-Trichlorophenol	88-06-2	8270D	ND		1.0	0.22	ug/L	1

Surrogate	Q	Run 1 % Recovery	Acceptance Limits
2-Fluorobiphenyl		58	37-129
2-Fluorophenol		59	24-127
Nitrobenzene-d5		56	38-127
Phenol-d5		58	28-128
Terphenyl-d14		10	10-148
2,4,6-Tribromophenol		69	41-144

PQL = Practical quantitation limit
B = Detected in the method blank
E = Quantitation of compound exceeded the calibration range
ND = Not detected at or above the MDL
J = Estimated result < PQL and ≥ MDL
P = The RPD between two GC columns exceeds 40%
Where applicable, all soil sample analysis are reported on a dry weight basis unless flagged with a "W"
N = Recovery is out of criteria
H = Out of holding time

Dissolved RCRA Metals

Client: ARCADIS U.S., Inc.
Description: G4MW-050(050611)
Date Sampled: 05/06/2011 1415
Date Received: 05/10/2011

Laboratory ID: ME10010-003
Matrix: Aqueous

Run	Prep Method	Analytical Method	Dilution	Analysis Date	Analyst	Prep Date	Batch
1		7470A	1	05/13/2011 0924	KJC	05/12/2011 1630	59491
1	3005A	6010C	1	05/11/2011 1823	CDF	05/10/2011 1702	59321

Parameter	CAS Number	Analytical Method	Result	Q	PQL	MDL	Units	Run
Dissolved Arsenic	7440-38-2	6010C	0.0090	BJ	0.010	0.0040	mg/L	1
Dissolved Barium	7440-39-3	6010C	ND		0.025	0.0075	mg/L	1
Dissolved Cadmium	7440-43-9	6010C	ND		0.0020	0.00060	mg/L	1
Dissolved Chromium	7440-47-3	6010C	ND		0.0050	0.0021	mg/L	1
Dissolved Lead	7439-92-1	6010C	0.0019	J	0.010	0.0019	mg/L	1
Dissolved Mercury	7439-97-6	7470A	ND		0.00010	0.000053	mg/L	1
Dissolved Selenium	7782-49-2	6010C	0.0065	BJ	0.010	0.0026	mg/L	1
Dissolved Silver	7440-22-4	6010C	ND		0.0050	0.00040	mg/L	1

PQL = Practical quantitation limit
ND = Not detected at or above the MDL
Where applicable, all soil sample analysis are reported on a dry weight basis unless flagged with a "W"
B = Detected in the method blank
J = Estimated result < PQL and ≥ MDL
E = Quantitation of compound exceeded the calibration range
P = The RPD between two GC columns exceeds 40%
N = Recovery is out of criteria
H = Out of holding time

RCRA Metals

Client: ARCADIS U.S., Inc.
Laboratory ID: ME10010-003
Description: G4MW-050(050611)
Matrix: Aqueous
Date Sampled: 05/06/2011 1415
Date Received: 05/10/2011

Run	Prep Method	Analytical Method	Dilution	Analysis Date	Analyst	Prep Date	Batch
1		7470A	1	05/13/2011 0916	KJC	05/12/2011 1630	59491
1	3005A	6010C	1	05/11/2011 1816	CDF	05/10/2011 1702	59321

Parameter	CAS Number	Analytical Method	Result	Q	PQL	MDL	Units	Run
Arsenic	7440-38-2	6010C	0.018	B	0.010	0.0040	mg/L	1
Barium	7440-39-3	6010C	0.24		0.025	0.0075	mg/L	1
Cadmium	7440-43-9	6010C	0.0014	J	0.0020	0.00060	mg/L	1
Chromium	7440-47-3	6010C	0.048		0.0050	0.0021	mg/L	1
Lead	7439-92-1	6010C	0.024		0.010	0.0019	mg/L	1
Mercury	7439-97-6	7470A	0.000055	J	0.00010	0.000053	mg/L	1
Selenium	7782-49-2	6010C	0.0073	BJ	0.010	0.0026	mg/L	1
Silver	7440-22-4	6010C	ND		0.0050	0.00040	mg/L	1

PQL = Practical quantitation limit
B = Detected in the method blank
E = Quantitation of compound exceeded the calibration range
ND = Not detected at or above the MDL
J = Estimated result < PQL and ≥ MDL
P = The RPD between two GC columns exceeds 40%
Where applicable, all soil sample analysis are reported on a dry weight basis unless flagged with a "W"
N = Recovery is out of criteria
H = Out of holding time

Volatile Organic Compounds by GC/MS

Client: ARCADIS U.S., Inc.
Laboratory ID: ME10010-004
Description: G4MW-051(050611)
Matrix: Aqueous
Date Sampled: 05/06/2011 1500
Date Received: 05/10/2011

Run	Prep Method	Analytical Method	Dilution	Analysis Date	Analyst	Prep Date	Batch
1	5030B	8260B	1	05/16/2011 0347	LBS		59649

Parameter	CAS Number	Analytical Method	Result	Q	PQL	MDL	Units	Run
Acetone	67-64-1	8260B	ND		20	6.7	ug/L	1
Benzene	71-43-2	8260B	0.34	J	1.0	0.13	ug/L	1
Bromodichloromethane	75-27-4	8260B	ND		1.0	0.33	ug/L	1
Bromoform	75-25-2	8260B	ND		1.0	0.66	ug/L	1
Bromomethane (Methyl bromide)	74-83-9	8260B	ND		2.0	0.80	ug/L	1
2-Butanone (MEK)	78-93-3	8260B	25		10	2.0	ug/L	1
Carbon disulfide	75-15-0	8260B	2.0		1.0	0.097	ug/L	1
Carbon tetrachloride	56-23-5	8260B	ND		1.0	0.14	ug/L	1
Chlorobenzene	108-90-7	8260B	ND		2.0	0.33	ug/L	1
Chloroethane	75-00-3	8260B	ND		2.0	0.47	ug/L	1
Chloroform	67-66-3	8260B	ND		1.0	0.33	ug/L	1
Chloromethane (Methyl chloride)	74-87-3	8260B	ND		1.0	0.35	ug/L	1
Dibromochloromethane	124-48-1	8260B	ND		1.0	0.33	ug/L	1
1,4-Dichlorobenzene	106-46-7	8260B	ND		1.0	0.33	ug/L	1
1,3-Dichlorobenzene	541-73-1	8260B	ND		1.0	0.33	ug/L	1
1,2-Dichlorobenzene	95-50-1	8260B	ND		1.0	0.33	ug/L	1
1,2-Dichloroethane	107-06-2	8260B	ND		1.0	0.15	ug/L	1
1,1-Dichloroethane	75-34-3	8260B	ND		1.0	0.13	ug/L	1
trans-1,2-Dichloroethene	156-60-5	8260B	0.60	J	1.0	0.21	ug/L	1
cis-1,2-Dichloroethene	156-59-2	8260B	260		1.0	0.12	ug/L	1
1,1-Dichloroethene	75-35-4	8260B	1.7		1.0	0.16	ug/L	1
1,2-Dichloropropane	78-87-5	8260B	ND		1.0	0.19	ug/L	1
trans-1,3-Dichloropropene	10061-02-6	8260B	ND		1.0	0.11	ug/L	1
cis-1,3-Dichloropropene	10061-01-5	8260B	ND		1.0	0.092	ug/L	1
Ethylbenzene	100-41-4	8260B	ND		1.0	0.33	ug/L	1
2-Hexanone	591-78-6	8260B	ND		10	0.27	ug/L	1
Methyl tertiary butyl ether (MTBE)	1634-04-4	8260B	ND		1.0	0.40	ug/L	1
4-Methyl-2-pentanone	108-10-1	8260B	ND		10	0.31	ug/L	1
Methylene chloride	75-09-2	8260B	ND		1.0	0.33	ug/L	1
Styrene	100-42-5	8260B	ND		1.0	0.12	ug/L	1
1,1,2,2-Tetrachloroethane	79-34-5	8260B	ND		1.0	0.16	ug/L	1
Tetrachloroethene	127-18-4	8260B	2.2		1.0	0.13	ug/L	1
Toluene	108-88-3	8260B	ND		1.0	0.33	ug/L	1
1,2,4-Trichlorobenzene	120-82-1	8260B	ND		1.0	0.51	ug/L	1
1,1,2-Trichloroethane	79-00-5	8260B	ND		1.0	0.21	ug/L	1
1,1,1-Trichloroethane	71-55-6	8260B	ND		1.0	0.074	ug/L	1
Trichloroethene	79-01-6	8260B	380		1.0	0.18	ug/L	1
Vinyl chloride	75-01-4	8260B	ND		1.0	0.054	ug/L	1
Xylenes (total)	1330-20-7	8260B	ND		1.0	0.33	ug/L	1

PQL = Practical quantitation limit
B = Detected in the method blank
E = Quantitation of compound exceeded the calibration range
ND = Not detected at or above the MDL
J = Estimated result < PQL and ≥ MDL
P = The RPD between two GC columns exceeds 40%
Where applicable, all soil sample analysis are reported on a dry weight basis unless flagged with a "W"
N = Recovery is out of criteria
H = Out of holding time

Volatile Organic Compounds by GC/MS

Client: ARCADIS U.S., Inc.
Laboratory ID: ME10010-004
Description: G4MW-051(050611)
Matrix: Aqueous
Date Sampled: 05/06/2011 1500
Date Received: 05/10/2011

Surrogate	Q	Run 1 % Recovery	Acceptance Limits
1,2-Dichloroethane-d4		96	70-130
Bromofluorobenzene		94	70-130
Toluene-d8		98	70-130

PQL = Practical quantitation limit
B = Detected in the method blank
E = Quantitation of compound exceeded the calibration range
ND = Not detected at or above the MDL
J = Estimated result < PQL and ≥ MDL
P = The RPD between two GC columns exceeds 40%
Where applicable, all soil sample analysis are reported on a dry weight basis unless flagged with a "W"
N = Recovery is out of criteria
H = Out of holding time

Semivolatile Organic Compounds by GC/MS

Client: ARCADIS U.S., Inc.
Laboratory ID: ME10010-004
Description: G4MW-051(050611)
Matrix: Aqueous
Date Sampled: 05/06/2011 1500
Date Received: 05/10/2011

Run	Prep Method	Analytical Method	Dilution	Analysis Date	Analyst	Prep Date	Batch
1	3520C	8270D	1	05/16/2011 1914	JGH	05/11/2011 1331	59361

Parameter	CAS Number	Analytical Method	Result	Q	PQL	MDL	Units	Run
Acenaphthene	83-32-9	8270D	ND		1.0	0.091	ug/L	1
Acenaphthylene	208-96-8	8270D	ND		1.0	0.16	ug/L	1
Anthracene	120-12-7	8270D	ND		1.0	0.13	ug/L	1
Benzo(a)anthracene	56-55-3	8270D	ND		1.0	0.15	ug/L	1
Benzo(a)pyrene	50-32-8	8270D	ND		1.0	0.16	ug/L	1
Benzo(b)fluoranthene	205-99-2	8270D	ND		1.0	0.20	ug/L	1
Benzo(g,h,i)perylene	191-24-2	8270D	ND		1.0	0.23	ug/L	1
Benzo(k)fluoranthene	207-08-9	8270D	ND		1.0	0.12	ug/L	1
4-Bromophenyl phenyl ether	101-55-3	8270D	ND		1.0	0.12	ug/L	1
Butyl benzyl phthalate	85-68-7	8270D	ND		5.1	1.7	ug/L	1
Carbazole	86-74-8	8270D	ND		1.0	0.25	ug/L	1
4-Chloro-3-methyl phenol	59-50-7	8270D	ND		1.0	0.22	ug/L	1
4-Chloroaniline	106-47-8	8270D	ND		1.0	0.13	ug/L	1
bis(2-Chloroethoxy)methane	111-91-1	8270D	ND		1.0	0.13	ug/L	1
bis(2-Chloroisopropyl)ether	108-60-1	8270D	ND		1.0	0.081	ug/L	1
2-Chloronaphthalene	91-58-7	8270D	ND		1.0	0.12	ug/L	1
2-Chlorophenol	95-57-8	8270D	ND		1.0	0.13	ug/L	1
4-Chlorophenyl phenyl ether	7005-72-3	8270D	ND		1.0	0.11	ug/L	1
Chrysene	218-01-9	8270D	ND		1.0	0.12	ug/L	1
Dibenzo(a,h)anthracene	53-70-3	8270D	ND		1.0	0.13	ug/L	1
Dibenzofuran	132-64-9	8270D	ND		1.0	0.16	ug/L	1
3,3'-Dichlorobenzidine	91-94-1	8270D	ND		5.1	0.82	ug/L	1
2,4-Dichlorophenol	120-83-2	8270D	ND		1.0	0.15	ug/L	1
Diethylphthalate	84-66-2	8270D	ND		5.1	1.7	ug/L	1
Dimethyl phthalate	131-11-3	8270D	ND		5.1	1.7	ug/L	1
2,4-Dimethylphenol	105-67-9	8270D	ND		1.0	0.31	ug/L	1
Di-n-butyl phthalate	84-74-2	8270D	ND		5.1	1.7	ug/L	1
4,6-Dinitro-2-methylphenol	534-52-1	8270D	ND		5.1	1.5	ug/L	1
2,4-Dinitrophenol	51-28-5	8270D	ND		5.1	0.25	ug/L	1
2,4-Dinitrotoluene	121-14-2	8270D	ND		2.0	0.45	ug/L	1
2,6-Dinitrotoluene	606-20-2	8270D	ND		2.0	0.40	ug/L	1
Di-n-octylphthalate	117-84-0	8270D	ND		5.1	1.7	ug/L	1
bis(2-Ethylhexyl)phthalate	117-81-7	8270D	ND		5.1	1.7	ug/L	1
Fluoranthene	206-44-0	8270D	ND		1.0	0.21	ug/L	1
Fluorene	86-73-7	8270D	ND		1.0	0.10	ug/L	1
Hexachlorobenzene	118-74-1	8270D	ND		1.0	0.21	ug/L	1
Hexachlorobutadiene	87-68-3	8270D	ND		1.0	0.091	ug/L	1
Hexachlorocyclopentadiene	77-47-4	8270D	ND		5.1	0.23	ug/L	1
Hexachloroethane	67-72-1	8270D	ND		1.0	0.11	ug/L	1
Indeno(1,2,3-c,d)pyrene	193-39-5	8270D	ND		1.0	0.23	ug/L	1
Isophorone	78-59-1	8270D	ND		1.0	0.081	ug/L	1
2-Methylnaphthalene	91-57-6	8270D	ND		1.0	0.081	ug/L	1
2-Methylphenol	95-48-7	8270D	ND		1.0	0.17	ug/L	1
3 & 4-Methylphenol	106-44-5	8270D	ND		2.0	0.58	ug/L	1

PQL = Practical quantitation limit
B = Detected in the method blank
E = Quantitation of compound exceeded the calibration range
ND = Not detected at or above the MDL
J = Estimated result < PQL and ≥ MDL
P = The RPD between two GC columns exceeds 40%
Where applicable, all soil sample analysis are reported on a dry weight basis unless flagged with a "W"
N = Recovery is out of criteria
H = Out of holding time

Semivolatile Organic Compounds by GC/MS

Client: ARCADIS U.S., Inc.
Laboratory ID: ME10010-004
Description: G4MW-051(050611)
Matrix: Aqueous
Date Sampled: 05/06/2011 1500
Date Received: 05/10/2011

Run	Prep Method	Analytical Method	Dilution	Analysis Date	Analyst	Prep Date	Batch
1	3520C	8270D	1	05/16/2011 1914	JGH	05/11/2011 1331	59361

Parameter	CAS Number	Analytical Method	Result	Q	PQL	MDL	Units	Run
Naphthalene	91-20-3	8270D	ND		1.0	0.071	ug/L	1
2-Nitroaniline	88-74-4	8270D	ND		2.0	0.56	ug/L	1
3-Nitroaniline	99-09-2	8270D	ND		2.0	0.78	ug/L	1
4-Nitroaniline	100-01-6	8270D	ND		2.0	0.39	ug/L	1
Nitrobenzene	98-95-3	8270D	ND		1.0	0.10	ug/L	1
2-Nitrophenol	88-75-5	8270D	ND		2.0	0.27	ug/L	1
4-Nitrophenol	100-02-7	8270D	ND		5.1	0.65	ug/L	1
N-Nitrosodi-n-propylamine	621-64-7	8270D	ND		1.0	0.081	ug/L	1
N-Nitrosodiphenylamine (Diphenylamine)	86-30-6	8270D	ND		1.0	0.38	ug/L	1
Pentachlorophenol	87-86-5	8270D	ND		5.1	0.55	ug/L	1
Phenanthrene	85-01-8	8270D	ND		1.0	0.18	ug/L	1
Phenol	108-95-2	8270D	ND		1.0	0.11	ug/L	1
Pyrene	129-00-0	8270D	ND		1.0	0.16	ug/L	1
2,4,5-Trichlorophenol	95-95-4	8270D	ND		1.0	0.18	ug/L	1
2,4,6-Trichlorophenol	88-06-2	8270D	ND		1.0	0.22	ug/L	1

Surrogate	Q	Run 1 % Recovery	Acceptance Limits
2-Fluorobiphenyl		57	37-129
2-Fluorophenol		59	24-127
Nitrobenzene-d5		57	38-127
Phenol-d5		60	28-128
Terphenyl-d14		10	10-148
2,4,6-Tribromophenol		68	41-144

PQL = Practical quantitation limit
B = Detected in the method blank
E = Quantitation of compound exceeded the calibration range
ND = Not detected at or above the MDL
J = Estimated result < PQL and ≥ MDL
P = The RPD between two GC columns exceeds 40%
Where applicable, all soil sample analysis are reported on a dry weight basis unless flagged with a "W"
N = Recovery is out of criteria
H = Out of holding time

Dissolved RCRA Metals

Client: ARCADIS U.S., Inc.
Laboratory ID: ME10010-004
Description: G4MW-051(050611)
Matrix: Aqueous
Date Sampled: 05/06/2011 1500
Date Received: 05/10/2011

Run	Prep Method	Analytical Method	Dilution	Analysis Date	Analyst	Prep Date	Batch
1		7470A	1	05/13/2011 0930	KJC	05/12/2011 1630	59491
1	3005A	6010C	1	05/11/2011 1849	CDF	05/10/2011 1702	59321

Parameter	CAS Number	Analytical Method	Result	Q	PQL	MDL	Units	Run
Dissolved Arsenic	7440-38-2	6010C	0.0098	BJ	0.010	0.0040	mg/L	1
Dissolved Barium	7440-39-3	6010C	0.045		0.025	0.0075	mg/L	1
Dissolved Cadmium	7440-43-9	6010C	ND		0.0020	0.00060	mg/L	1
Dissolved Chromium	7440-47-3	6010C	0.0036	J	0.0050	0.0021	mg/L	1
Dissolved Lead	7439-92-1	6010C	ND		0.010	0.0019	mg/L	1
Dissolved Mercury	7439-97-6	7470A	ND		0.00010	0.000053	mg/L	1
Dissolved Selenium	7782-49-2	6010C	0.0042	BJ	0.010	0.0026	mg/L	1
Dissolved Silver	7440-22-4	6010C	ND		0.0050	0.00040	mg/L	1

PQL = Practical quantitation limit
B = Detected in the method blank
E = Quantitation of compound exceeded the calibration range
ND = Not detected at or above the MDL
J = Estimated result < PQL and ≥ MDL
P = The RPD between two GC columns exceeds 40%
Where applicable, all soil sample analysis are reported on a dry weight basis unless flagged with a "W"
N = Recovery is out of criteria
H = Out of holding time

RCRA Metals

Client: ARCADIS U.S., Inc.
Laboratory ID: ME10010-004
Description: G4MW-051(050611)
Matrix: Aqueous
Date Sampled: 05/06/2011 1500
Date Received: 05/10/2011

Run	Prep Method	Analytical Method	Dilution	Analysis Date	Analyst	Prep Date	Batch
1		7470A	1	05/13/2011 0927	KJC	05/12/2011 1630	59491
1	3005A	6010C	1	05/11/2011 1829	CDF	05/10/2011 1702	59321

Parameter	CAS Number	Analytical Method	Result	Q	PQL	MDL	Units	Run
Arsenic	7440-38-2	6010C	0.023	B	0.010	0.0040	mg/L	1
Barium	7440-39-3	6010C	0.42		0.025	0.0075	mg/L	1
Cadmium	7440-43-9	6010C	0.0037		0.0020	0.00060	mg/L	1
Chromium	7440-47-3	6010C	0.13		0.0050	0.0021	mg/L	1
Lead	7439-92-1	6010C	0.034		0.010	0.0019	mg/L	1
Mercury	7439-97-6	7470A	0.000056	J	0.00010	0.000053	mg/L	1
Selenium	7782-49-2	6010C	0.0097	BJ	0.010	0.0026	mg/L	1
Silver	7440-22-4	6010C	ND		0.0050	0.00040	mg/L	1

PQL = Practical quantitation limit
B = Detected in the method blank
E = Quantitation of compound exceeded the calibration range
ND = Not detected at or above the MDL
J = Estimated result < PQL and ≥ MDL
P = The RPD between two GC columns exceeds 40%
Where applicable, all soil sample analysis are reported on a dry weight basis unless flagged with a "W"
N = Recovery is out of criteria
H = Out of holding time

Volatile Organic Compounds by GC/MS

Client: ARCADIS U.S., Inc.
Laboratory ID: ME10010-005
Description: G4MW-052(050611)
Matrix: Aqueous
Date Sampled: 05/06/2011 1800
Date Received: 05/10/2011

Run	Prep Method	Analytical Method	Dilution	Analysis Date	Analyst	Prep Date	Batch
1	5030B	8260B	1	05/16/2011 0408	LBS		59649

Parameter	CAS Number	Analytical Method	Result	Q	PQL	MDL	Units	Run
Acetone	67-64-1	8260B	ND		20	6.7	ug/L	1
Benzene	71-43-2	8260B	ND		1.0	0.13	ug/L	1
Bromodichloromethane	75-27-4	8260B	ND		1.0	0.33	ug/L	1
Bromoform	75-25-2	8260B	ND		1.0	0.66	ug/L	1
Bromomethane (Methyl bromide)	74-83-9	8260B	ND		2.0	0.80	ug/L	1
2-Butanone (MEK)	78-93-3	8260B	ND		10	2.0	ug/L	1
Carbon disulfide	75-15-0	8260B	ND		1.0	0.097	ug/L	1
Carbon tetrachloride	56-23-5	8260B	ND		1.0	0.14	ug/L	1
Chlorobenzene	108-90-7	8260B	ND		2.0	0.33	ug/L	1
Chloroethane	75-00-3	8260B	ND		2.0	0.47	ug/L	1
Chloroform	67-66-3	8260B	ND		1.0	0.33	ug/L	1
Chloromethane (Methyl chloride)	74-87-3	8260B	ND		1.0	0.35	ug/L	1
Dibromochloromethane	124-48-1	8260B	ND		1.0	0.33	ug/L	1
1,4-Dichlorobenzene	106-46-7	8260B	ND		1.0	0.33	ug/L	1
1,3-Dichlorobenzene	541-73-1	8260B	ND		1.0	0.33	ug/L	1
1,2-Dichlorobenzene	95-50-1	8260B	ND		1.0	0.33	ug/L	1
1,2-Dichloroethane	107-06-2	8260B	ND		1.0	0.15	ug/L	1
1,1-Dichloroethane	75-34-3	8260B	1.7		1.0	0.13	ug/L	1
trans-1,2-Dichloroethene	156-60-5	8260B	ND		1.0	0.21	ug/L	1
cis-1,2-Dichloroethene	156-59-2	8260B	2.2		1.0	0.12	ug/L	1
1,1-Dichloroethene	75-35-4	8260B	2.6		1.0	0.16	ug/L	1
1,2-Dichloropropane	78-87-5	8260B	ND		1.0	0.19	ug/L	1
trans-1,3-Dichloropropene	10061-02-6	8260B	ND		1.0	0.11	ug/L	1
cis-1,3-Dichloropropene	10061-01-5	8260B	ND		1.0	0.092	ug/L	1
Ethylbenzene	100-41-4	8260B	ND		1.0	0.33	ug/L	1
2-Hexanone	591-78-6	8260B	ND		10	0.27	ug/L	1
Methyl tertiary butyl ether (MTBE)	1634-04-4	8260B	ND		1.0	0.40	ug/L	1
4-Methyl-2-pentanone	108-10-1	8260B	ND		10	0.31	ug/L	1
Methylene chloride	75-09-2	8260B	ND		1.0	0.33	ug/L	1
Styrene	100-42-5	8260B	ND		1.0	0.12	ug/L	1
1,1,2,2-Tetrachloroethane	79-34-5	8260B	ND		1.0	0.16	ug/L	1
Tetrachloroethene	127-18-4	8260B	ND		1.0	0.13	ug/L	1
Toluene	108-88-3	8260B	ND		1.0	0.33	ug/L	1
1,2,4-Trichlorobenzene	120-82-1	8260B	ND		1.0	0.51	ug/L	1
1,1,2-Trichloroethane	79-00-5	8260B	ND		1.0	0.21	ug/L	1
1,1,1-Trichloroethane	71-55-6	8260B	ND		1.0	0.074	ug/L	1
Trichloroethene	79-01-6	8260B	5.3		1.0	0.18	ug/L	1
Vinyl chloride	75-01-4	8260B	ND		1.0	0.054	ug/L	1
Xylenes (total)	1330-20-7	8260B	ND		1.0	0.33	ug/L	1

PQL = Practical quantitation limit
B = Detected in the method blank
E = Quantitation of compound exceeded the calibration range
ND = Not detected at or above the MDL
J = Estimated result < PQL and ≥ MDL
P = The RPD between two GC columns exceeds 40%
Where applicable, all soil sample analysis are reported on a dry weight basis unless flagged with a "W"
N = Recovery is out of criteria
H = Out of holding time

Volatile Organic Compounds by GC/MS

Client: ARCADIS U.S., Inc.
Laboratory ID: ME10010-005
Description: G4MW-052(050611)
Matrix: Aqueous
Date Sampled: 05/06/2011 1800
Date Received: 05/10/2011

Surrogate	Q	Run 1 % Recovery	Acceptance Limits
1,2-Dichloroethane-d4		97	70-130
Bromofluorobenzene		95	70-130
Toluene-d8		98	70-130

PQL = Practical quantitation limit
B = Detected in the method blank
E = Quantitation of compound exceeded the calibration range
ND = Not detected at or above the MDL
J = Estimated result < PQL and ≥ MDL
P = The RPD between two GC columns exceeds 40%
Where applicable, all soil sample analysis are reported on a dry weight basis unless flagged with a "W"
N = Recovery is out of criteria
H = Out of holding time

Semivolatile Organic Compounds by GC/MS

Client: ARCADIS U.S., Inc.
Laboratory ID: ME10010-005
Description: G4MW-052(050611)
Matrix: Aqueous
Date Sampled: 05/06/2011 1800
Date Received: 05/10/2011

Run	Prep Method	Analytical Method	Dilution	Analysis Date	Analyst	Prep Date	Batch
1	3520C	8270D	1	05/16/2011 1933	WD	05/11/2011 1331	59361
2	3520C	8270D	1	05/25/2011 0123	JGH	05/19/2011 1125	59927

Parameter	CAS Number	Analytical Method	Result	Q	PQL	MDL	Units	Run
Acenaphthene	83-32-9	8270D	ND		1.0	0.091	ug/L	1
Acenaphthylene	208-96-8	8270D	ND		1.0	0.16	ug/L	1
Anthracene	120-12-7	8270D	ND		1.0	0.13	ug/L	1
Benzo(a)anthracene	56-55-3	8270D	ND		1.0	0.15	ug/L	1
Benzo(a)pyrene	50-32-8	8270D	ND		1.0	0.16	ug/L	1
Benzo(b)fluoranthene	205-99-2	8270D	ND		1.0	0.20	ug/L	1
Benzo(g,h,i)perylene	191-24-2	8270D	ND		1.0	0.23	ug/L	1
Benzo(k)fluoranthene	207-08-9	8270D	ND		1.0	0.12	ug/L	1
4-Bromophenyl phenyl ether	101-55-3	8270D	ND		1.0	0.12	ug/L	1
Butyl benzyl phthalate	85-68-7	8270D	ND		5.1	1.7	ug/L	1
Carbazole	86-74-8	8270D	ND		1.0	0.25	ug/L	1
4-Chloro-3-methyl phenol	59-50-7	8270D	ND		1.0	0.22	ug/L	1
4-Chloroaniline	106-47-8	8270D	ND		1.0	0.13	ug/L	1
bis(2-Chloroethoxy)methane	111-91-1	8270D	ND		1.0	0.13	ug/L	1
bis(2-Chloroisopropyl)ether	108-60-1	8270D	ND		1.0	0.081	ug/L	1
2-Chloronaphthalene	91-58-7	8270D	ND		1.0	0.12	ug/L	1
2-Chlorophenol	95-57-8	8270D	ND		1.0	0.13	ug/L	1
4-Chlorophenyl phenyl ether	7005-72-3	8270D	ND		1.0	0.11	ug/L	1
Chrysene	218-01-9	8270D	ND		1.0	0.12	ug/L	1
Dibenzo(a,h)anthracene	53-70-3	8270D	ND		1.0	0.13	ug/L	1
Dibenzofuran	132-64-9	8270D	ND		1.0	0.16	ug/L	1
3,3'-Dichlorobenzidine	91-94-1	8270D	ND		5.1	0.82	ug/L	1
2,4-Dichlorophenol	120-83-2	8270D	ND		1.0	0.15	ug/L	1
Diethylphthalate	84-66-2	8270D	ND		5.1	1.7	ug/L	1
Dimethyl phthalate	131-11-3	8270D	ND		5.1	1.7	ug/L	1
2,4-Dimethylphenol	105-67-9	8270D	ND		1.0	0.31	ug/L	1
Di-n-butyl phthalate	84-74-2	8270D	ND		5.1	1.7	ug/L	1
4,6-Dinitro-2-methylphenol	534-52-1	8270D	ND		5.1	1.5	ug/L	1
2,4-Dinitrophenol	51-28-5	8270D	ND		5.1	0.25	ug/L	1
2,4-Dinitrotoluene	121-14-2	8270D	ND		2.0	0.45	ug/L	1
2,6-Dinitrotoluene	606-20-2	8270D	ND		2.0	0.40	ug/L	1
Di-n-octylphthalate	117-84-0	8270D	ND		5.1	1.7	ug/L	1
bis(2-Ethylhexyl)phthalate	117-81-7	8270D	ND		5.1	1.7	ug/L	1
Fluoranthene	206-44-0	8270D	ND		1.0	0.21	ug/L	1
Fluorene	86-73-7	8270D	ND		1.0	0.10	ug/L	1
Hexachlorobenzene	118-74-1	8270D	ND		1.0	0.21	ug/L	1
Hexachlorobutadiene	87-68-3	8270D	ND		1.0	0.091	ug/L	1
Hexachlorocyclopentadiene	77-47-4	8270D	ND		5.1	0.23	ug/L	1
Hexachloroethane	67-72-1	8270D	ND		1.0	0.11	ug/L	1
Indeno(1,2,3-c,d)pyrene	193-39-5	8270D	ND		1.0	0.23	ug/L	1
Isophorone	78-59-1	8270D	ND		1.0	0.081	ug/L	1
2-Methylnaphthalene	91-57-6	8270D	ND		1.0	0.081	ug/L	1
2-Methylphenol	95-48-7	8270D	ND		1.0	0.17	ug/L	1

PQL = Practical quantitation limit
B = Detected in the method blank
E = Quantitation of compound exceeded the calibration range
ND = Not detected at or above the MDL
J = Estimated result < PQL and ≥ MDL
P = The RPD between two GC columns exceeds 40%
Where applicable, all soil sample analysis are reported on a dry weight basis unless flagged with a "W"
N = Recovery is out of criteria
H = Out of holding time

Semivolatile Organic Compounds by GC/MS

Client: ARCADIS U.S., Inc.
Laboratory ID: ME10010-005
Description: G4MW-052(050611)
Matrix: Aqueous
Date Sampled: 05/06/2011 1800
Date Received: 05/10/2011

Run	Prep Method	Analytical Method	Dilution	Analysis Date	Analyst	Prep Date	Batch
1	3520C	8270D	1	05/16/2011 1933	WD	05/11/2011 1331	59361
2	3520C	8270D	1	05/25/2011 0123	JGH	05/19/2011 1125	59927

Parameter	CAS Number	Analytical Method	Result	Q	PQL	MDL	Units	Run
3 & 4-Methylphenol	106-44-5	8270D	ND		2.0	0.58	ug/L	1
Naphthalene	91-20-3	8270D	ND		1.0	0.071	ug/L	1
2-Nitroaniline	88-74-4	8270D	ND		2.0	0.56	ug/L	1
3-Nitroaniline	99-09-2	8270D	ND		2.0	0.78	ug/L	1
4-Nitroaniline	100-01-6	8270D	ND		2.0	0.39	ug/L	1
Nitrobenzene	98-95-3	8270D	ND		1.0	0.10	ug/L	1
2-Nitrophenol	88-75-5	8270D	ND		2.0	0.27	ug/L	1
4-Nitrophenol	100-02-7	8270D	ND		5.1	0.65	ug/L	1
N-Nitrosodi-n-propylamine	621-64-7	8270D	ND		1.0	0.081	ug/L	1
N-Nitrosodiphenylamine (Diphenylamine)	86-30-6	8270D	ND		1.0	0.38	ug/L	1
Pentachlorophenol	87-86-5	8270D	ND		5.1	0.55	ug/L	1
Phenanthrene	85-01-8	8270D	ND		1.0	0.18	ug/L	1
Phenol	108-95-2	8270D	ND		1.0	0.11	ug/L	1
Pyrene	129-00-0	8270D	0.16	J	1.0	0.16	ug/L	1
2,4,5-Trichlorophenol	95-95-4	8270D	ND		1.0	0.18	ug/L	1
2,4,6-Trichlorophenol	88-06-2	8270D	ND		1.0	0.22	ug/L	1

Surrogate	Q	Run 1 % Recovery	Acceptance Limits	Q	Run 2 % Recovery	Acceptance Limits
2-Fluorobiphenyl		56	37-129	H	54	37-129
2-Fluorophenol		64	24-127	H	57	24-127
Nitrobenzene-d5		59	38-127	H	55	38-127
Phenol-d5		63	28-128	H	58	28-128
Terphenyl-d14	N	8.3	10-148	HN	8.6	10-148
2,4,6-Tribromophenol		65	41-144	H	54	41-144

PQL = Practical quantitation limit
B = Detected in the method blank
E = Quantitation of compound exceeded the calibration range
ND = Not detected at or above the MDL
J = Estimated result < PQL and ≥ MDL
P = The RPD between two GC columns exceeds 40%
Where applicable, all soil sample analysis are reported on a dry weight basis unless flagged with a "W"
N = Recovery is out of criteria
H = Out of holding time

Semivolatile Organic Compounds by GC/MS

Client: ARCADIS U.S., Inc.
Laboratory ID: ME10010-005
Description: G4MW-052(050611)
Matrix: Aqueous
Date Sampled: 05/06/2011 1800
Date Received: 05/10/2011

Run	Prep Method	Analytical Method	Dilution	Analysis Date	Analyst	Prep Date	Batch
1	3520C	8270D	1	05/16/2011 1933	WD	05/11/2011 1331	59361
2	3520C	8270D	1	05/25/2011 0123	JGH	05/19/2011 1125	59927

Parameter	CAS Number	Analytical Method	Result	Q	PQL	MDL	Units	Run
Acenaphthene	83-32-9	8270D	ND	H	1.0	0.091	ug/L	2
Acenaphthylene	208-96-8	8270D	ND	H	1.0	0.16	ug/L	2
Anthracene	120-12-7	8270D	ND	H	1.0	0.13	ug/L	2
Benzo(a)anthracene	56-55-3	8270D	ND	H	1.0	0.15	ug/L	2
Benzo(a)pyrene	50-32-8	8270D	ND	H	1.0	0.16	ug/L	2
Benzo(b)fluoranthene	205-99-2	8270D	ND	H	1.0	0.20	ug/L	2
Benzo(g,h,i)perylene	191-24-2	8270D	ND	H	1.0	0.23	ug/L	2
Benzo(k)fluoranthene	207-08-9	8270D	ND	H	1.0	0.12	ug/L	2
4-Bromophenyl phenyl ether	101-55-3	8270D	ND	H	1.0	0.12	ug/L	2
Butyl benzyl phthalate	85-68-7	8270D	ND	H	5.1	1.7	ug/L	2
Carbazole	86-74-8	8270D	ND	H	1.0	0.25	ug/L	2
4-Chloro-3-methyl phenol	59-50-7	8270D	ND	H	1.0	0.22	ug/L	2
4-Chloroaniline	106-47-8	8270D	ND	H	1.0	0.13	ug/L	2
bis(2-Chloroethoxy)methane	111-91-1	8270D	ND	H	1.0	0.13	ug/L	2
bis(2-Chloroisopropyl)ether	108-60-1	8270D	0.34	JH	1.0	0.081	ug/L	2
2-Chloronaphthalene	91-58-7	8270D	ND	H	1.0	0.12	ug/L	2
2-Chlorophenol	95-57-8	8270D	ND	H	1.0	0.13	ug/L	2
4-Chlorophenyl phenyl ether	7005-72-3	8270D	ND	H	1.0	0.11	ug/L	2
Chrysene	218-01-9	8270D	ND	H	1.0	0.12	ug/L	2
Dibenzo(a,h)anthracene	53-70-3	8270D	ND	H	1.0	0.13	ug/L	2
Dibenzofuran	132-64-9	8270D	ND	H	1.0	0.16	ug/L	2
3,3'-Dichlorobenzidine	91-94-1	8270D	ND	H	5.1	0.82	ug/L	2
2,4-Dichlorophenol	120-83-2	8270D	ND	H	1.0	0.15	ug/L	2
Diethylphthalate	84-66-2	8270D	ND	H	5.1	1.7	ug/L	2
Dimethyl phthalate	131-11-3	8270D	ND	H	5.1	1.7	ug/L	2
2,4-Dimethylphenol	105-67-9	8270D	ND	H	1.0	0.31	ug/L	2
Di-n-butyl phthalate	84-74-2	8270D	ND	H	5.1	1.7	ug/L	2
4,6-Dinitro-2-methylphenol	534-52-1	8270D	ND	H	5.1	1.5	ug/L	2
2,4-Dinitrophenol	51-28-5	8270D	ND	H	5.1	0.25	ug/L	2
2,4-Dinitrotoluene	121-14-2	8270D	ND	H	2.0	0.45	ug/L	2
2,6-Dinitrotoluene	606-20-2	8270D	ND	H	2.0	0.40	ug/L	2
Di-n-octylphthalate	117-84-0	8270D	ND	H	5.1	1.7	ug/L	2
bis(2-Ethylhexyl)phthalate	117-81-7	8270D	ND	H	5.1	1.7	ug/L	2
Fluoranthene	206-44-0	8270D	ND	H	1.0	0.21	ug/L	2
Fluorene	86-73-7	8270D	ND	H	1.0	0.10	ug/L	2
Hexachlorobenzene	118-74-1	8270D	ND	H	1.0	0.21	ug/L	2
Hexachlorobutadiene	87-68-3	8270D	ND	H	1.0	0.091	ug/L	2
Hexachlorocyclopentadiene	77-47-4	8270D	ND	H	5.1	0.23	ug/L	2
Hexachloroethane	67-72-1	8270D	ND	H	1.0	0.11	ug/L	2
Indeno(1,2,3-c,d)pyrene	193-39-5	8270D	ND	H	1.0	0.23	ug/L	2
Isophorone	78-59-1	8270D	ND	H	1.0	0.081	ug/L	2
2-Methylnaphthalene	91-57-6	8270D	ND	H	1.0	0.081	ug/L	2
2-Methylphenol	95-48-7	8270D	ND	H	1.0	0.17	ug/L	2

PQL = Practical quantitation limit
B = Detected in the method blank
E = Quantitation of compound exceeded the calibration range
ND = Not detected at or above the MDL
J = Estimated result < PQL and ≥ MDL
P = The RPD between two GC columns exceeds 40%
Where applicable, all soil sample analysis are reported on a dry weight basis unless flagged with a "W"
N = Recovery is out of criteria
H = Out of holding time

Semivolatile Organic Compounds by GC/MS

Client: ARCADIS U.S., Inc.
Laboratory ID: ME10010-005
Description: G4MW-052(050611)
Matrix: Aqueous
Date Sampled: 05/06/2011 1800
Date Received: 05/10/2011

Run	Prep Method	Analytical Method	Dilution	Analysis Date	Analyst	Prep Date	Batch
1	3520C	8270D	1	05/16/2011 1933	WD	05/11/2011 1331	59361
2	3520C	8270D	1	05/25/2011 0123	JGH	05/19/2011 1125	59927

Parameter	CAS Number	Analytical Method	Result	Q	PQL	MDL	Units	Run
3 & 4-Methylphenol	106-44-5	8270D	ND	H	2.0	0.58	ug/L	2
Naphthalene	91-20-3	8270D	ND	H	1.0	0.071	ug/L	2
2-Nitroaniline	88-74-4	8270D	ND	H	2.0	0.56	ug/L	2
3-Nitroaniline	99-09-2	8270D	ND	H	2.0	0.78	ug/L	2
4-Nitroaniline	100-01-6	8270D	ND	H	2.0	0.39	ug/L	2
Nitrobenzene	98-95-3	8270D	ND	H	1.0	0.10	ug/L	2
2-Nitrophenol	88-75-5	8270D	ND	H	2.0	0.27	ug/L	2
4-Nitrophenol	100-02-7	8270D	ND	H	5.1	0.65	ug/L	2
N-Nitrosodi-n-propylamine	621-64-7	8270D	ND	H	1.0	0.081	ug/L	2
N-Nitrosodiphenylamine (Diphenylamine)	86-30-6	8270D	ND	H	1.0	0.38	ug/L	2
Pentachlorophenol	87-86-5	8270D	ND	H	5.1	0.55	ug/L	2
Phenanthrene	85-01-8	8270D	ND	H	1.0	0.18	ug/L	2
Phenol	108-95-2	8270D	ND	H	1.0	0.11	ug/L	2
Pyrene	129-00-0	8270D	ND	H	1.0	0.16	ug/L	2
2,4,5-Trichlorophenol	95-95-4	8270D	ND	H	1.0	0.18	ug/L	2
2,4,6-Trichlorophenol	88-06-2	8270D	ND	H	1.0	0.22	ug/L	2

Surrogate	Q	Run 1 % Recovery	Acceptance Limits	Q	Run 2 % Recovery	Acceptance Limits
2-Fluorobiphenyl		56	37-129	H	54	37-129
2-Fluorophenol		64	24-127	H	57	24-127
Nitrobenzene-d5		59	38-127	H	55	38-127
Phenol-d5		63	28-128	H	58	28-128
Terphenyl-d14	N	8.3	10-148	HN	8.6	10-148
2,4,6-Tribromophenol		65	41-144	H	54	41-144

PQL = Practical quantitation limit
B = Detected in the method blank
E = Quantitation of compound exceeded the calibration range
ND = Not detected at or above the MDL
J = Estimated result < PQL and ≥ MDL
P = The RPD between two GC columns exceeds 40%
Where applicable, all soil sample analysis are reported on a dry weight basis unless flagged with a "W"
N = Recovery is out of criteria
H = Out of holding time

Dissolved RCRA Metals

Client: ARCADIS U.S., Inc.
Laboratory ID: ME10010-005
Description: G4MW-052(050611)
Matrix: Aqueous
Date Sampled: 05/06/2011 1800
Date Received: 05/10/2011

Run	Prep Method	Analytical Method	Dilution	Analysis Date	Analyst	Prep Date	Batch
1		7470A	1	05/13/2011 0935	KJC	05/12/2011 1630	59491
1	3005A	6010C	1	05/11/2011 1902	CDF	05/10/2011 1702	59321

Parameter	CAS Number	Analytical Method	Result	Q	PQL	MDL	Units	Run
Dissolved Arsenic	7440-38-2	6010C	0.0042	BJ	0.010	0.0040	mg/L	1
Dissolved Barium	7440-39-3	6010C	ND		0.025	0.0075	mg/L	1
Dissolved Cadmium	7440-43-9	6010C	ND		0.0020	0.00060	mg/L	1
Dissolved Chromium	7440-47-3	6010C	0.0021	J	0.0050	0.0021	mg/L	1
Dissolved Lead	7439-92-1	6010C	ND		0.010	0.0019	mg/L	1
Dissolved Mercury	7439-97-6	7470A	0.000059	J	0.00010	0.000053	mg/L	1
Dissolved Selenium	7782-49-2	6010C	ND		0.010	0.0026	mg/L	1
Dissolved Silver	7440-22-4	6010C	ND		0.0050	0.00040	mg/L	1

PQL = Practical quantitation limit
B = Detected in the method blank
E = Quantitation of compound exceeded the calibration range
ND = Not detected at or above the MDL
J = Estimated result < PQL and ≥ MDL
P = The RPD between two GC columns exceeds 40%
Where applicable, all soil sample analysis are reported on a dry weight basis unless flagged with a "W"
N = Recovery is out of criteria
H = Out of holding time

RCRA Metals

Client: ARCADIS U.S., Inc.
Laboratory ID: ME10010-005
Description: G4MW-052(050611)
Matrix: Aqueous
Date Sampled: 05/06/2011 1800
Date Received: 05/10/2011

Run	Prep Method	Analytical Method	Dilution	Analysis Date	Analyst	Prep Date	Batch
1		7470A	1	05/13/2011 0933	KJC	05/12/2011 1630	59491
1	3005A	6010C	1	05/11/2011 1856	CDF	05/10/2011 1702	59321

Parameter	CAS Number	Analytical Method	Result	Q	PQL	MDL	Units	Run
Arsenic	7440-38-2	6010C	0.025	B	0.010	0.0040	mg/L	1
Barium	7440-39-3	6010C	0.43		0.025	0.0075	mg/L	1
Cadmium	7440-43-9	6010C	0.0014	J	0.0020	0.00060	mg/L	1
Chromium	7440-47-3	6010C	0.15		0.0050	0.0021	mg/L	1
Lead	7439-92-1	6010C	0.045		0.010	0.0019	mg/L	1
Mercury	7439-97-6	7470A	ND		0.00010	0.000053	mg/L	1
Selenium	7782-49-2	6010C	0.012	B	0.010	0.0026	mg/L	1
Silver	7440-22-4	6010C	ND		0.0050	0.00040	mg/L	1

PQL = Practical quantitation limit
B = Detected in the method blank
E = Quantitation of compound exceeded the calibration range
ND = Not detected at or above the MDL
J = Estimated result < PQL and ≥ MDL
P = The RPD between two GC columns exceeds 40%
Where applicable, all soil sample analysis are reported on a dry weight basis unless flagged with a "W"
N = Recovery is out of criteria
H = Out of holding time

Volatile Organic Compounds by GC/MS

Client: ARCADIS U.S., Inc.
Laboratory ID: ME10010-006
Description: G4MW-053(050611)
Matrix: Aqueous
Date Sampled: 05/06/2011 1615
Date Received: 05/10/2011

Run	Prep Method	Analytical Method	Dilution	Analysis Date	Analyst	Prep Date	Batch
1	5030B	8260B	1	05/16/2011 0430	LBS		59649

Parameter	CAS Number	Analytical Method	Result	Q	PQL	MDL	Units	Run
Acetone	67-64-1	8260B	ND		20	6.7	ug/L	1
Benzene	71-43-2	8260B	ND		1.0	0.13	ug/L	1
Bromodichloromethane	75-27-4	8260B	ND		1.0	0.33	ug/L	1
Bromoform	75-25-2	8260B	ND		1.0	0.66	ug/L	1
Bromomethane (Methyl bromide)	74-83-9	8260B	ND		2.0	0.80	ug/L	1
2-Butanone (MEK)	78-93-3	8260B	ND		10	2.0	ug/L	1
Carbon disulfide	75-15-0	8260B	1.9		1.0	0.097	ug/L	1
Carbon tetrachloride	56-23-5	8260B	ND		1.0	0.14	ug/L	1
Chlorobenzene	108-90-7	8260B	ND		2.0	0.33	ug/L	1
Chloroethane	75-00-3	8260B	ND		2.0	0.47	ug/L	1
Chloroform	67-66-3	8260B	ND		1.0	0.33	ug/L	1
Chloromethane (Methyl chloride)	74-87-3	8260B	ND		1.0	0.35	ug/L	1
Dibromochloromethane	124-48-1	8260B	ND		1.0	0.33	ug/L	1
1,4-Dichlorobenzene	106-46-7	8260B	ND		1.0	0.33	ug/L	1
1,3-Dichlorobenzene	541-73-1	8260B	ND		1.0	0.33	ug/L	1
1,2-Dichlorobenzene	95-50-1	8260B	ND		1.0	0.33	ug/L	1
1,2-Dichloroethane	107-06-2	8260B	ND		1.0	0.15	ug/L	1
1,1-Dichloroethane	75-34-3	8260B	ND		1.0	0.13	ug/L	1
trans-1,2-Dichloroethene	156-60-5	8260B	ND		1.0	0.21	ug/L	1
cis-1,2-Dichloroethene	156-59-2	8260B	ND		1.0	0.12	ug/L	1
1,1-Dichloroethene	75-35-4	8260B	ND		1.0	0.16	ug/L	1
1,2-Dichloropropane	78-87-5	8260B	ND		1.0	0.19	ug/L	1
trans-1,3-Dichloropropene	10061-02-6	8260B	ND		1.0	0.11	ug/L	1
cis-1,3-Dichloropropene	10061-01-5	8260B	ND		1.0	0.092	ug/L	1
Ethylbenzene	100-41-4	8260B	ND		1.0	0.33	ug/L	1
2-Hexanone	591-78-6	8260B	ND		10	0.27	ug/L	1
Methyl tertiary butyl ether (MTBE)	1634-04-4	8260B	ND		1.0	0.40	ug/L	1
4-Methyl-2-pentanone	108-10-1	8260B	ND		10	0.31	ug/L	1
Methylene chloride	75-09-2	8260B	ND		1.0	0.33	ug/L	1
Styrene	100-42-5	8260B	ND		1.0	0.12	ug/L	1
1,1,2,2-Tetrachloroethane	79-34-5	8260B	ND		1.0	0.16	ug/L	1
Tetrachloroethene	127-18-4	8260B	ND		1.0	0.13	ug/L	1
Toluene	108-88-3	8260B	0.84	J	1.0	0.33	ug/L	1
1,2,4-Trichlorobenzene	120-82-1	8260B	ND		1.0	0.51	ug/L	1
1,1,2-Trichloroethane	79-00-5	8260B	ND		1.0	0.21	ug/L	1
1,1,1-Trichloroethane	71-55-6	8260B	ND		1.0	0.074	ug/L	1
Trichloroethene	79-01-6	8260B	ND		1.0	0.18	ug/L	1
Vinyl chloride	75-01-4	8260B	ND		1.0	0.054	ug/L	1
Xylenes (total)	1330-20-7	8260B	ND		1.0	0.33	ug/L	1

PQL = Practical quantitation limit
B = Detected in the method blank
E = Quantitation of compound exceeded the calibration range
ND = Not detected at or above the MDL
J = Estimated result < PQL and ≥ MDL
P = The RPD between two GC columns exceeds 40%
Where applicable, all soil sample analysis are reported on a dry weight basis unless flagged with a "W"
N = Recovery is out of criteria
H = Out of holding time

Volatile Organic Compounds by GC/MS

Client: ARCADIS U.S., Inc.
Laboratory ID: ME10010-006
Description: G4MW-053(050611)
Matrix: Aqueous
Date Sampled: 05/06/2011 1615
Date Received: 05/10/2011

Surrogate	Q	Run 1 % Recovery	Acceptance Limits
1,2-Dichloroethane-d4		96	70-130
Bromofluorobenzene		94	70-130
Toluene-d8		97	70-130

PQL = Practical quantitation limit
B = Detected in the method blank
E = Quantitation of compound exceeded the calibration range
ND = Not detected at or above the MDL
J = Estimated result < PQL and ≥ MDL
P = The RPD between two GC columns exceeds 40%
Where applicable, all soil sample analysis are reported on a dry weight basis unless flagged with a "W"
N = Recovery is out of criteria
H = Out of holding time

Semivolatile Organic Compounds by GC/MS

Client: ARCADIS U.S., Inc.
Laboratory ID: ME10010-006
Description: G4MW-053(050611)
Matrix: Aqueous
Date Sampled: 05/06/2011 1615
Date Received: 05/10/2011

Run	Prep Method	Analytical Method	Dilution	Analysis Date	Analyst	Prep Date	Batch
1	3520C	8270D	1	05/16/2011 1952	WD	05/11/2011 1331	59361
2	3520C	8270D	1	05/25/2011 0142	JGH	05/19/2011 1125	59927

Parameter	CAS Number	Analytical Method	Result	Q	PQL	MDL	Units	Run
Acenaphthene	83-32-9	8270D	ND		1.0	0.091	ug/L	1
Acenaphthylene	208-96-8	8270D	ND		1.0	0.16	ug/L	1
Anthracene	120-12-7	8270D	ND		1.0	0.13	ug/L	1
Benzo(a)anthracene	56-55-3	8270D	ND		1.0	0.15	ug/L	1
Benzo(a)pyrene	50-32-8	8270D	ND		1.0	0.16	ug/L	1
Benzo(b)fluoranthene	205-99-2	8270D	ND		1.0	0.20	ug/L	1
Benzo(g,h,i)perylene	191-24-2	8270D	ND		1.0	0.23	ug/L	1
Benzo(k)fluoranthene	207-08-9	8270D	ND		1.0	0.12	ug/L	1
4-Bromophenyl phenyl ether	101-55-3	8270D	ND		1.0	0.12	ug/L	1
Butyl benzyl phthalate	85-68-7	8270D	ND		5.1	1.7	ug/L	1
Carbazole	86-74-8	8270D	ND		1.0	0.25	ug/L	1
4-Chloro-3-methyl phenol	59-50-7	8270D	ND		1.0	0.22	ug/L	1
4-Chloroaniline	106-47-8	8270D	ND		1.0	0.13	ug/L	1
bis(2-Chloroethoxy)methane	111-91-1	8270D	ND		1.0	0.13	ug/L	1
bis(2-Chloroisopropyl)ether	108-60-1	8270D	ND		1.0	0.081	ug/L	1
2-Chloronaphthalene	91-58-7	8270D	ND		1.0	0.12	ug/L	1
2-Chlorophenol	95-57-8	8270D	ND		1.0	0.13	ug/L	1
4-Chlorophenyl phenyl ether	7005-72-3	8270D	ND		1.0	0.11	ug/L	1
Chrysene	218-01-9	8270D	ND		1.0	0.12	ug/L	1
Dibenzo(a,h)anthracene	53-70-3	8270D	ND		1.0	0.13	ug/L	1
Dibenzofuran	132-64-9	8270D	ND		1.0	0.16	ug/L	1
3,3'-Dichlorobenzidine	91-94-1	8270D	ND		5.1	0.82	ug/L	1
2,4-Dichlorophenol	120-83-2	8270D	ND		1.0	0.15	ug/L	1
Diethylphthalate	84-66-2	8270D	ND		5.1	1.7	ug/L	1
Dimethyl phthalate	131-11-3	8270D	ND		5.1	1.7	ug/L	1
2,4-Dimethylphenol	105-67-9	8270D	ND		1.0	0.31	ug/L	1
Di-n-butyl phthalate	84-74-2	8270D	ND		5.1	1.7	ug/L	1
4,6-Dinitro-2-methylphenol	534-52-1	8270D	ND		5.1	1.5	ug/L	1
2,4-Dinitrophenol	51-28-5	8270D	ND		5.1	0.25	ug/L	1
2,4-Dinitrotoluene	121-14-2	8270D	ND		2.0	0.45	ug/L	1
2,6-Dinitrotoluene	606-20-2	8270D	ND		2.0	0.40	ug/L	1
Di-n-octylphthalate	117-84-0	8270D	ND		5.1	1.7	ug/L	1
bis(2-Ethylhexyl)phthalate	117-81-7	8270D	ND		5.1	1.7	ug/L	1
Fluoranthene	206-44-0	8270D	ND		1.0	0.21	ug/L	1
Fluorene	86-73-7	8270D	ND		1.0	0.10	ug/L	1
Hexachlorobenzene	118-74-1	8270D	ND		1.0	0.21	ug/L	1
Hexachlorobutadiene	87-68-3	8270D	ND		1.0	0.091	ug/L	1
Hexachlorocyclopentadiene	77-47-4	8270D	ND		5.1	0.23	ug/L	1
Hexachloroethane	67-72-1	8270D	ND		1.0	0.11	ug/L	1
Indeno(1,2,3-c,d)pyrene	193-39-5	8270D	ND		1.0	0.23	ug/L	1
Isophorone	78-59-1	8270D	ND		1.0	0.081	ug/L	1
2-Methylnaphthalene	91-57-6	8270D	ND		1.0	0.081	ug/L	1
2-Methylphenol	95-48-7	8270D	ND		1.0	0.17	ug/L	1

PQL = Practical quantitation limit
B = Detected in the method blank
E = Quantitation of compound exceeded the calibration range
ND = Not detected at or above the MDL
J = Estimated result < PQL and ≥ MDL
P = The RPD between two GC columns exceeds 40%
Where applicable, all soil sample analysis are reported on a dry weight basis unless flagged with a "W"
N = Recovery is out of criteria
H = Out of holding time

Semivolatile Organic Compounds by GC/MS

Client: ARCADIS U.S., Inc.
Laboratory ID: ME10010-006
Description: G4MW-053(050611)
Matrix: Aqueous
Date Sampled: 05/06/2011 1615
Date Received: 05/10/2011

Run	Prep Method	Analytical Method	Dilution	Analysis Date	Analyst	Prep Date	Batch
1	3520C	8270D	1	05/16/2011 1952	WD	05/11/2011 1331	59361
2	3520C	8270D	1	05/25/2011 0142	JGH	05/19/2011 1125	59927

Parameter	CAS Number	Analytical Method	Result	Q	PQL	MDL	Units	Run
3 & 4-Methylphenol	106-44-5	8270D	ND		2.0	0.58	ug/L	1
Naphthalene	91-20-3	8270D	ND		1.0	0.071	ug/L	1
2-Nitroaniline	88-74-4	8270D	ND		2.0	0.56	ug/L	1
3-Nitroaniline	99-09-2	8270D	ND		2.0	0.78	ug/L	1
4-Nitroaniline	100-01-6	8270D	ND		2.0	0.39	ug/L	1
Nitrobenzene	98-95-3	8270D	ND		1.0	0.10	ug/L	1
2-Nitrophenol	88-75-5	8270D	ND		2.0	0.27	ug/L	1
4-Nitrophenol	100-02-7	8270D	ND		5.1	0.65	ug/L	1
N-Nitrosodi-n-propylamine	621-64-7	8270D	ND		1.0	0.081	ug/L	1
N-Nitrosodiphenylamine (Diphenylamine)	86-30-6	8270D	ND		1.0	0.38	ug/L	1
Pentachlorophenol	87-86-5	8270D	ND		5.1	0.55	ug/L	1
Phenanthrene	85-01-8	8270D	ND		1.0	0.18	ug/L	1
Phenol	108-95-2	8270D	ND		1.0	0.11	ug/L	1
Pyrene	129-00-0	8270D	ND		1.0	0.16	ug/L	1
2,4,5-Trichlorophenol	95-95-4	8270D	ND		1.0	0.18	ug/L	1
2,4,6-Trichlorophenol	88-06-2	8270D	ND		1.0	0.22	ug/L	1

Surrogate	Q	Run 1 % Recovery	Acceptance Limits	Q	Run 2 % Recovery	Acceptance Limits
2-Fluorobiphenyl		52	37-129	H	54	37-129
2-Fluorophenol		57	24-127	H	60	24-127
Nitrobenzene-d5		56	38-127	H	57	38-127
Phenol-d5		59	28-128	H	61	28-128
Terphenyl-d14	N	9.0	10-148	HN	8.2	10-148
2,4,6-Tribromophenol		63	41-144	H	55	41-144

PQL = Practical quantitation limit
B = Detected in the method blank
E = Quantitation of compound exceeded the calibration range
ND = Not detected at or above the MDL
J = Estimated result < PQL and ≥ MDL
P = The RPD between two GC columns exceeds 40%
Where applicable, all soil sample analysis are reported on a dry weight basis unless flagged with a "W"
N = Recovery is out of criteria
H = Out of holding time

Semivolatile Organic Compounds by GC/MS

Client: ARCADIS U.S., Inc.
Laboratory ID: ME10010-006
Description: G4MW-053(050611)
Matrix: Aqueous
Date Sampled: 05/06/2011 1615
Date Received: 05/10/2011

Run	Prep Method	Analytical Method	Dilution	Analysis Date	Analyst	Prep Date	Batch
1	3520C	8270D	1	05/16/2011 1952	WD	05/11/2011 1331	59361
2	3520C	8270D	1	05/25/2011 0142	JGH	05/19/2011 1125	59927

Parameter	CAS Number	Analytical Method	Result	Q	PQL	MDL	Units	Run
Acenaphthene	83-32-9	8270D	ND	H	1.0	0.093	ug/L	2
Acenaphthylene	208-96-8	8270D	ND	H	1.0	0.16	ug/L	2
Anthracene	120-12-7	8270D	ND	H	1.0	0.13	ug/L	2
Benzo(a)anthracene	56-55-3	8270D	ND	H	1.0	0.15	ug/L	2
Benzo(a)pyrene	50-32-8	8270D	ND	H	1.0	0.16	ug/L	2
Benzo(b)fluoranthene	205-99-2	8270D	ND	H	1.0	0.21	ug/L	2
Benzo(g,h,i)perylene	191-24-2	8270D	ND	H	1.0	0.24	ug/L	2
Benzo(k)fluoranthene	207-08-9	8270D	ND	H	1.0	0.12	ug/L	2
4-Bromophenyl phenyl ether	101-55-3	8270D	ND	H	1.0	0.12	ug/L	2
Butyl benzyl phthalate	85-68-7	8270D	ND	H	5.2	1.8	ug/L	2
Carbazole	86-74-8	8270D	ND	H	1.0	0.26	ug/L	2
4-Chloro-3-methyl phenol	59-50-7	8270D	ND	H	1.0	0.23	ug/L	2
4-Chloroaniline	106-47-8	8270D	ND	H	1.0	0.13	ug/L	2
bis(2-Chloroethoxy)methane	111-91-1	8270D	ND	H	1.0	0.13	ug/L	2
bis(2-Chloroisopropyl)ether	108-60-1	8270D	0.13	JH	1.0	0.082	ug/L	2
2-Chloronaphthalene	91-58-7	8270D	ND	H	1.0	0.12	ug/L	2
2-Chlorophenol	95-57-8	8270D	ND	H	1.0	0.13	ug/L	2
4-Chlorophenyl phenyl ether	7005-72-3	8270D	ND	H	1.0	0.11	ug/L	2
Chrysene	218-01-9	8270D	ND	H	1.0	0.12	ug/L	2
Dibenzo(a,h)anthracene	53-70-3	8270D	ND	H	1.0	0.13	ug/L	2
Dibenzofuran	132-64-9	8270D	ND	H	1.0	0.16	ug/L	2
3,3'-Dichlorobenzidine	91-94-1	8270D	ND	H	5.2	0.84	ug/L	2
2,4-Dichlorophenol	120-83-2	8270D	ND	H	1.0	0.15	ug/L	2
Diethylphthalate	84-66-2	8270D	ND	H	5.2	1.8	ug/L	2
Dimethyl phthalate	131-11-3	8270D	ND	H	5.2	1.8	ug/L	2
2,4-Dimethylphenol	105-67-9	8270D	ND	H	1.0	0.32	ug/L	2
Di-n-butyl phthalate	84-74-2	8270D	ND	H	5.2	1.8	ug/L	2
4,6-Dinitro-2-methylphenol	534-52-1	8270D	ND	H	5.2	1.5	ug/L	2
2,4-Dinitrophenol	51-28-5	8270D	ND	H	5.2	0.26	ug/L	2
2,4-Dinitrotoluene	121-14-2	8270D	ND	H	2.1	0.46	ug/L	2
2,6-Dinitrotoluene	606-20-2	8270D	ND	H	2.1	0.41	ug/L	2
Di-n-octylphthalate	117-84-0	8270D	ND	H	5.2	1.8	ug/L	2
bis(2-Ethylhexyl)phthalate	117-81-7	8270D	ND	H	5.2	1.8	ug/L	2
Fluoranthene	206-44-0	8270D	ND	H	1.0	0.22	ug/L	2
Fluorene	86-73-7	8270D	ND	H	1.0	0.10	ug/L	2
Hexachlorobenzene	118-74-1	8270D	ND	H	1.0	0.22	ug/L	2
Hexachlorobutadiene	87-68-3	8270D	ND	H	1.0	0.093	ug/L	2
Hexachlorocyclopentadiene	77-47-4	8270D	ND	H	5.2	0.24	ug/L	2
Hexachloroethane	67-72-1	8270D	ND	H	1.0	0.11	ug/L	2
Indeno(1,2,3-c,d)pyrene	193-39-5	8270D	ND	H	1.0	0.24	ug/L	2
Isophorone	78-59-1	8270D	ND	H	1.0	0.082	ug/L	2
2-Methylnaphthalene	91-57-6	8270D	ND	H	1.0	0.082	ug/L	2
2-Methylphenol	95-48-7	8270D	ND	H	1.0	0.18	ug/L	2

PQL = Practical quantitation limit
B = Detected in the method blank
E = Quantitation of compound exceeded the calibration range
ND = Not detected at or above the MDL
J = Estimated result < PQL and ≥ MDL
P = The RPD between two GC columns exceeds 40%
Where applicable, all soil sample analysis are reported on a dry weight basis unless flagged with a "W"
N = Recovery is out of criteria
H = Out of holding time

Semivolatile Organic Compounds by GC/MS

Client: ARCADIS U.S., Inc.
Laboratory ID: ME10010-006
Description: G4MW-053(050611)
Matrix: Aqueous
Date Sampled: 05/06/2011 1615
Date Received: 05/10/2011

Run	Prep Method	Analytical Method	Dilution	Analysis Date	Analyst	Prep Date	Batch
1	3520C	8270D	1	05/16/2011 1952	WD	05/11/2011 1331	59361
2	3520C	8270D	1	05/25/2011 0142	JGH	05/19/2011 1125	59927

Parameter	CAS Number	Analytical Method	Result	Q	PQL	MDL	Units	Run
3 & 4-Methylphenol	106-44-5	8270D	ND	H	2.1	0.59	ug/L	2
Naphthalene	91-20-3	8270D	ND	H	1.0	0.072	ug/L	2
2-Nitroaniline	88-74-4	8270D	ND	H	2.1	0.57	ug/L	2
3-Nitroaniline	99-09-2	8270D	ND	H	2.1	0.79	ug/L	2
4-Nitroaniline	100-01-6	8270D	ND	H	2.1	0.40	ug/L	2
Nitrobenzene	98-95-3	8270D	ND	H	1.0	0.10	ug/L	2
2-Nitrophenol	88-75-5	8270D	ND	H	2.1	0.28	ug/L	2
4-Nitrophenol	100-02-7	8270D	ND	H	5.2	0.66	ug/L	2
N-Nitrosodi-n-propylamine	621-64-7	8270D	ND	H	1.0	0.082	ug/L	2
N-Nitrosodiphenylamine (Diphenylamine)	86-30-6	8270D	ND	H	1.0	0.39	ug/L	2
Pentachlorophenol	87-86-5	8270D	ND	H	5.2	0.56	ug/L	2
Phenanthrene	85-01-8	8270D	ND	H	1.0	0.19	ug/L	2
Phenol	108-95-2	8270D	ND	H	1.0	0.11	ug/L	2
Pyrene	129-00-0	8270D	ND	H	1.0	0.16	ug/L	2
2,4,5-Trichlorophenol	95-95-4	8270D	ND	H	1.0	0.19	ug/L	2
2,4,6-Trichlorophenol	88-06-2	8270D	ND	H	1.0	0.23	ug/L	2

Surrogate	Q	Run 1 % Recovery	Acceptance Limits	Q	Run 2 % Recovery	Acceptance Limits
2-Fluorobiphenyl		52	37-129	H	54	37-129
2-Fluorophenol		57	24-127	H	60	24-127
Nitrobenzene-d5		56	38-127	H	57	38-127
Phenol-d5		59	28-128	H	61	28-128
Terphenyl-d14	N	9.0	10-148	HN	8.2	10-148
2,4,6-Tribromophenol		63	41-144	H	55	41-144

PQL = Practical quantitation limit
B = Detected in the method blank
E = Quantitation of compound exceeded the calibration range
ND = Not detected at or above the MDL
J = Estimated result < PQL and ≥ MDL
P = The RPD between two GC columns exceeds 40%
Where applicable, all soil sample analysis are reported on a dry weight basis unless flagged with a "W"
N = Recovery is out of criteria
H = Out of holding time

Dissolved RCRA Metals

Client: ARCADIS U.S., Inc.
Laboratory ID: ME10010-006
Description: G4MW-053(050611)
Matrix: Aqueous
Date Sampled: 05/06/2011 1615
Date Received: 05/10/2011

Run	Prep Method	Analytical Method	Dilution	Analysis Date	Analyst	Prep Date	Batch
1		7470A	1	05/13/2011 0942	KJC	05/12/2011 1630	59491
1	3005A	6010C	1	05/11/2011 1915	CDF	05/10/2011 1702	59321

Parameter	CAS Number	Analytical Method	Result	Q	PQL	MDL	Units	Run
Dissolved Arsenic	7440-38-2	6010C	0.024	B	0.010	0.0040	mg/L	1
Dissolved Barium	7440-39-3	6010C	0.019	J	0.025	0.0075	mg/L	1
Dissolved Cadmium	7440-43-9	6010C	ND		0.0020	0.00060	mg/L	1
Dissolved Chromium	7440-47-3	6010C	0.0026	J	0.0050	0.0021	mg/L	1
Dissolved Lead	7439-92-1	6010C	ND		0.010	0.0019	mg/L	1
Dissolved Mercury	7439-97-6	7470A	ND		0.00010	0.000053	mg/L	1
Dissolved Selenium	7782-49-2	6010C	0.0073	BJ	0.010	0.0026	mg/L	1
Dissolved Silver	7440-22-4	6010C	ND		0.0050	0.00040	mg/L	1

PQL = Practical quantitation limit
B = Detected in the method blank
E = Quantitation of compound exceeded the calibration range
ND = Not detected at or above the MDL
J = Estimated result < PQL and ≥ MDL
P = The RPD between two GC columns exceeds 40%
Where applicable, all soil sample analysis are reported on a dry weight basis unless flagged with a "W"
N = Recovery is out of criteria
H = Out of holding time

RCRA Metals

Client: ARCADIS U.S., Inc.
Laboratory ID: ME10010-006
Description: G4MW-053(050611)
Matrix: Aqueous
Date Sampled: 05/06/2011 1615
Date Received: 05/10/2011

Run	Prep Method	Analytical Method	Dilution	Analysis Date	Analyst	Prep Date	Batch
1		7470A	1	05/13/2011 0938	KJC	05/12/2011 1630	59491
1	3005A	6010C	1	05/11/2011 1909	CDF	05/10/2011 1702	59321

Parameter	CAS Number	Analytical Method	Result	Q	PQL	MDL	Units	Run
Arsenic	7440-38-2	6010C	0.077	B	0.010	0.0040	mg/L	1
Barium	7440-39-3	6010C	0.34		0.025	0.0075	mg/L	1
Cadmium	7440-43-9	6010C	0.0023		0.0020	0.00060	mg/L	1
Chromium	7440-47-3	6010C	0.24		0.0050	0.0021	mg/L	1
Lead	7439-92-1	6010C	0.088		0.010	0.0019	mg/L	1
Mercury	7439-97-6	7470A	0.000069	J	0.00010	0.000053	mg/L	1
Selenium	7782-49-2	6010C	0.017	B	0.010	0.0026	mg/L	1
Silver	7440-22-4	6010C	ND		0.0050	0.00040	mg/L	1

PQL = Practical quantitation limit
B = Detected in the method blank
E = Quantitation of compound exceeded the calibration range
ND = Not detected at or above the MDL
J = Estimated result < PQL and ≥ MDL
P = The RPD between two GC columns exceeds 40%
Where applicable, all soil sample analysis are reported on a dry weight basis unless flagged with a "W"
N = Recovery is out of criteria
H = Out of holding time

Volatile Organic Compounds by GC/MS

Client: ARCADIS U.S., Inc.
Laboratory ID: ME10010-007
Description: G4MW-054(050611)
Matrix: Aqueous
Date Sampled: 05/06/2011 1030
Date Received: 05/10/2011

Run	Prep Method	Analytical Method	Dilution	Analysis Date	Analyst	Prep Date	Batch
1	5030B	8260B	1	05/16/2011 0451	LBS		59649

Parameter	CAS Number	Analytical Method	Result	Q	PQL	MDL	Units	Run
Acetone	67-64-1	8260B	ND		20	6.7	ug/L	1
Benzene	71-43-2	8260B	ND		1.0	0.13	ug/L	1
Bromodichloromethane	75-27-4	8260B	ND		1.0	0.33	ug/L	1
Bromoform	75-25-2	8260B	ND		1.0	0.66	ug/L	1
Bromomethane (Methyl bromide)	74-83-9	8260B	ND		2.0	0.80	ug/L	1
2-Butanone (MEK)	78-93-3	8260B	ND		10	2.0	ug/L	1
Carbon disulfide	75-15-0	8260B	1.0		1.0	0.097	ug/L	1
Carbon tetrachloride	56-23-5	8260B	ND		1.0	0.14	ug/L	1
Chlorobenzene	108-90-7	8260B	ND		2.0	0.33	ug/L	1
Chloroethane	75-00-3	8260B	ND		2.0	0.47	ug/L	1
Chloroform	67-66-3	8260B	ND		1.0	0.33	ug/L	1
Chloromethane (Methyl chloride)	74-87-3	8260B	ND		1.0	0.35	ug/L	1
Dibromochloromethane	124-48-1	8260B	ND		1.0	0.33	ug/L	1
1,4-Dichlorobenzene	106-46-7	8260B	ND		1.0	0.33	ug/L	1
1,3-Dichlorobenzene	541-73-1	8260B	ND		1.0	0.33	ug/L	1
1,2-Dichlorobenzene	95-50-1	8260B	ND		1.0	0.33	ug/L	1
1,2-Dichloroethane	107-06-2	8260B	ND		1.0	0.15	ug/L	1
1,1-Dichloroethane	75-34-3	8260B	ND		1.0	0.13	ug/L	1
trans-1,2-Dichloroethene	156-60-5	8260B	ND		1.0	0.21	ug/L	1
cis-1,2-Dichloroethene	156-59-2	8260B	ND		1.0	0.12	ug/L	1
1,1-Dichloroethene	75-35-4	8260B	ND		1.0	0.16	ug/L	1
1,2-Dichloropropane	78-87-5	8260B	ND		1.0	0.19	ug/L	1
trans-1,3-Dichloropropene	10061-02-6	8260B	ND		1.0	0.11	ug/L	1
cis-1,3-Dichloropropene	10061-01-5	8260B	ND		1.0	0.092	ug/L	1
Ethylbenzene	100-41-4	8260B	ND		1.0	0.33	ug/L	1
2-Hexanone	591-78-6	8260B	ND		10	0.27	ug/L	1
Methyl tertiary butyl ether (MTBE)	1634-04-4	8260B	ND		1.0	0.40	ug/L	1
4-Methyl-2-pentanone	108-10-1	8260B	ND		10	0.31	ug/L	1
Methylene chloride	75-09-2	8260B	ND		1.0	0.33	ug/L	1
Styrene	100-42-5	8260B	ND		1.0	0.12	ug/L	1
1,1,2,2-Tetrachloroethane	79-34-5	8260B	ND		1.0	0.16	ug/L	1
Tetrachloroethene	127-18-4	8260B	ND		1.0	0.13	ug/L	1
Toluene	108-88-3	8260B	ND		1.0	0.33	ug/L	1
1,2,4-Trichlorobenzene	120-82-1	8260B	ND		1.0	0.51	ug/L	1
1,1,2-Trichloroethane	79-00-5	8260B	ND		1.0	0.21	ug/L	1
1,1,1-Trichloroethane	71-55-6	8260B	ND		1.0	0.074	ug/L	1
Trichloroethene	79-01-6	8260B	ND		1.0	0.18	ug/L	1
Vinyl chloride	75-01-4	8260B	ND		1.0	0.054	ug/L	1
Xylenes (total)	1330-20-7	8260B	ND		1.0	0.33	ug/L	1

PQL = Practical quantitation limit
B = Detected in the method blank
E = Quantitation of compound exceeded the calibration range
ND = Not detected at or above the MDL
J = Estimated result < PQL and ≥ MDL
P = The RPD between two GC columns exceeds 40%
Where applicable, all soil sample analysis are reported on a dry weight basis unless flagged with a "W"
N = Recovery is out of criteria
H = Out of holding time

Volatile Organic Compounds by GC/MS

Client: ARCADIS U.S., Inc.
Laboratory ID: ME10010-007
Description: G4MW-054(050611)
Matrix: Aqueous
Date Sampled: 05/06/2011 1030
Date Received: 05/10/2011

Surrogate	Q	Run 1 % Recovery	Acceptance Limits
1,2-Dichloroethane-d4		93	70-130
Bromofluorobenzene		93	70-130
Toluene-d8		97	70-130

PQL = Practical quantitation limit
B = Detected in the method blank
E = Quantitation of compound exceeded the calibration range
ND = Not detected at or above the MDL
J = Estimated result < PQL and ≥ MDL
P = The RPD between two GC columns exceeds 40%
Where applicable, all soil sample analysis are reported on a dry weight basis unless flagged with a "W"
N = Recovery is out of criteria
H = Out of holding time

Semivolatile Organic Compounds by GC/MS

Client: ARCADIS U.S., Inc.
Laboratory ID: ME10010-007
Description: G4MW-054(050611)
Matrix: Aqueous
Date Sampled: 05/06/2011 1030
Date Received: 05/10/2011

Run	Prep Method	Analytical Method	Dilution	Analysis Date	Analyst	Prep Date	Batch
1	3520C	8270D	1	05/16/2011 2011	JGH	05/11/2011 1331	59361

Parameter	CAS Number	Analytical Method	Result	Q	PQL	MDL	Units	Run
Acenaphthene	83-32-9	8270D	ND		1.1	0.10	ug/L	1
Acenaphthylene	208-96-8	8270D	ND		1.1	0.18	ug/L	1
Anthracene	120-12-7	8270D	ND		1.1	0.15	ug/L	1
Benzo(a)anthracene	56-55-3	8270D	ND		1.1	0.17	ug/L	1
Benzo(a)pyrene	50-32-8	8270D	ND		1.1	0.18	ug/L	1
Benzo(b)fluoranthene	205-99-2	8270D	ND		1.1	0.22	ug/L	1
Benzo(g,h,i)perylene	191-24-2	8270D	ND		1.1	0.26	ug/L	1
Benzo(k)fluoranthene	207-08-9	8270D	ND		1.1	0.13	ug/L	1
4-Bromophenyl phenyl ether	101-55-3	8270D	ND		1.1	0.13	ug/L	1
Butyl benzyl phthalate	85-68-7	8270D	ND		5.6	1.9	ug/L	1
Carbazole	86-74-8	8270D	ND		1.1	0.28	ug/L	1
4-Chloro-3-methyl phenol	59-50-7	8270D	ND		1.1	0.25	ug/L	1
4-Chloroaniline	106-47-8	8270D	ND		1.1	0.15	ug/L	1
bis(2-Chloroethoxy)methane	111-91-1	8270D	ND		1.1	0.15	ug/L	1
bis(2-Chloroisopropyl)ether	108-60-1	8270D	ND		1.1	0.090	ug/L	1
2-Chloronaphthalene	91-58-7	8270D	ND		1.1	0.13	ug/L	1
2-Chlorophenol	95-57-8	8270D	ND		1.1	0.15	ug/L	1
4-Chlorophenyl phenyl ether	7005-72-3	8270D	ND		1.1	0.12	ug/L	1
Chrysene	218-01-9	8270D	ND		1.1	0.13	ug/L	1
Dibenzo(a,h)anthracene	53-70-3	8270D	ND		1.1	0.15	ug/L	1
Dibenzofuran	132-64-9	8270D	ND		1.1	0.18	ug/L	1
3,3'-Dichlorobenzidine	91-94-1	8270D	ND		5.6	0.91	ug/L	1
2,4-Dichlorophenol	120-83-2	8270D	ND		1.1	0.17	ug/L	1
Diethylphthalate	84-66-2	8270D	ND		5.6	1.9	ug/L	1
Dimethyl phthalate	131-11-3	8270D	ND		5.6	1.9	ug/L	1
2,4-Dimethylphenol	105-67-9	8270D	ND		1.1	0.35	ug/L	1
Di-n-butyl phthalate	84-74-2	8270D	ND		5.6	1.9	ug/L	1
4,6-Dinitro-2-methylphenol	534-52-1	8270D	ND		5.6	1.7	ug/L	1
2,4-Dinitrophenol	51-28-5	8270D	ND		5.6	0.28	ug/L	1
2,4-Dinitrotoluene	121-14-2	8270D	ND		2.2	0.51	ug/L	1
2,6-Dinitrotoluene	606-20-2	8270D	ND		2.2	0.45	ug/L	1
Di-n-octylphthalate	117-84-0	8270D	ND		5.6	1.9	ug/L	1
bis(2-Ethylhexyl)phthalate	117-81-7	8270D	ND		5.6	1.9	ug/L	1
Fluoranthene	206-44-0	8270D	ND		1.1	0.24	ug/L	1
Fluorene	86-73-7	8270D	ND		1.1	0.11	ug/L	1
Hexachlorobenzene	118-74-1	8270D	ND		1.1	0.24	ug/L	1
Hexachlorobutadiene	87-68-3	8270D	ND		1.1	0.10	ug/L	1
Hexachlorocyclopentadiene	77-47-4	8270D	ND		5.6	0.26	ug/L	1
Hexachloroethane	67-72-1	8270D	ND		1.1	0.12	ug/L	1
Indeno(1,2,3-c,d)pyrene	193-39-5	8270D	ND		1.1	0.26	ug/L	1
Isophorone	78-59-1	8270D	ND		1.1	0.090	ug/L	1
2-Methylnaphthalene	91-57-6	8270D	ND		1.1	0.090	ug/L	1
2-Methylphenol	95-48-7	8270D	ND		1.1	0.19	ug/L	1
3 & 4-Methylphenol	106-44-5	8270D	ND		2.2	0.64	ug/L	1

PQL = Practical quantitation limit
B = Detected in the method blank
E = Quantitation of compound exceeded the calibration range
ND = Not detected at or above the MDL
J = Estimated result < PQL and ≥ MDL
P = The RPD between two GC columns exceeds 40%
Where applicable, all soil sample analysis are reported on a dry weight basis unless flagged with a "W"
N = Recovery is out of criteria
H = Out of holding time

Semivolatile Organic Compounds by GC/MS

Client: ARCADIS U.S., Inc.
Laboratory ID: ME10010-007
Description: G4MW-054(050611)
Matrix: Aqueous
Date Sampled: 05/06/2011 1030
Date Received: 05/10/2011

Run	Prep Method	Analytical Method	Dilution	Analysis Date	Analyst	Prep Date	Batch
1	3520C	8270D	1	05/16/2011 2011	JGH	05/11/2011 1331	59361

Parameter	CAS Number	Analytical Method	Result	Q	PQL	MDL	Units	Run
Naphthalene	91-20-3	8270D	ND		1.1	0.079	ug/L	1
2-Nitroaniline	88-74-4	8270D	ND		2.2	0.62	ug/L	1
3-Nitroaniline	99-09-2	8270D	ND		2.2	0.87	ug/L	1
4-Nitroaniline	100-01-6	8270D	ND		2.2	0.44	ug/L	1
Nitrobenzene	98-95-3	8270D	ND		1.1	0.11	ug/L	1
2-Nitrophenol	88-75-5	8270D	ND		2.2	0.30	ug/L	1
4-Nitrophenol	100-02-7	8270D	ND		5.6	0.72	ug/L	1
N-Nitrosodi-n-propylamine	621-64-7	8270D	ND		1.1	0.090	ug/L	1
N-Nitrosodiphenylamine (Diphenylamine)	86-30-6	8270D	ND		1.1	0.43	ug/L	1
Pentachlorophenol	87-86-5	8270D	ND		5.6	0.61	ug/L	1
Phenanthrene	85-01-8	8270D	ND		1.1	0.20	ug/L	1
Phenol	108-95-2	8270D	ND		1.1	0.12	ug/L	1
Pyrene	129-00-0	8270D	ND		1.1	0.18	ug/L	1
2,4,5-Trichlorophenol	95-95-4	8270D	ND		1.1	0.20	ug/L	1
2,4,6-Trichlorophenol	88-06-2	8270D	ND		1.1	0.25	ug/L	1

Surrogate	Q	Run 1 % Recovery	Acceptance Limits
2-Fluorobiphenyl		57	37-129
2-Fluorophenol		58	24-127
Nitrobenzene-d5		62	38-127
Phenol-d5		62	28-128
Terphenyl-d14		39	10-148
2,4,6-Tribromophenol		67	41-144

PQL = Practical quantitation limit
B = Detected in the method blank
E = Quantitation of compound exceeded the calibration range
ND = Not detected at or above the MDL
J = Estimated result < PQL and ≥ MDL
P = The RPD between two GC columns exceeds 40%
Where applicable, all soil sample analysis are reported on a dry weight basis unless flagged with a "W"
N = Recovery is out of criteria
H = Out of holding time

Dissolved RCRA Metals

Client: ARCADIS U.S., Inc.
Laboratory ID: ME10010-007
Description: G4MW-054(050611)
Matrix: Aqueous
Date Sampled: 05/06/2011 1030
Date Received: 05/10/2011

Run	Prep Method	Analytical Method	Dilution	Analysis Date	Analyst	Prep Date	Batch
1		7470A	1	05/13/2011 1042	KJC	05/12/2011 1630	59491
1	3005A	6010C	1	05/11/2011 1928	CDF	05/10/2011 1702	59321

Parameter	CAS Number	Analytical Method	Result	Q	PQL	MDL	Units	Run
Dissolved Arsenic	7440-38-2	6010C	0.0047	BJ	0.010	0.0040	mg/L	1
Dissolved Barium	7440-39-3	6010C	0.037		0.025	0.0075	mg/L	1
Dissolved Cadmium	7440-43-9	6010C	ND		0.0020	0.00060	mg/L	1
Dissolved Chromium	7440-47-3	6010C	0.0046	J	0.0050	0.0021	mg/L	1
Dissolved Lead	7439-92-1	6010C	ND		0.010	0.0019	mg/L	1
Dissolved Mercury	7439-97-6	7470A	ND		0.00010	0.000053	mg/L	1
Dissolved Selenium	7782-49-2	6010C	0.0043	BJ	0.010	0.0026	mg/L	1
Dissolved Silver	7440-22-4	6010C	ND		0.0050	0.00040	mg/L	1

PQL = Practical quantitation limit
B = Detected in the method blank
E = Quantitation of compound exceeded the calibration range
ND = Not detected at or above the MDL
J = Estimated result < PQL and ≥ MDL
P = The RPD between two GC columns exceeds 40%
Where applicable, all soil sample analysis are reported on a dry weight basis unless flagged with a "W"
N = Recovery is out of criteria
H = Out of holding time

RCRA Metals

Client: ARCADIS U.S., Inc.
Description: G4MW-054(050611)
Date Sampled: 05/06/2011 1030
Date Received: 05/10/2011

Laboratory ID: ME10010-007
Matrix: Aqueous

Run	Prep Method	Analytical Method	Dilution	Analysis Date	Analyst	Prep Date	Batch
1		7470A	1	05/13/2011 1039	KJC	05/12/2011 1630	59491
1	3005A	6010C	1	05/11/2011 1922	CDF	05/10/2011 1702	59321
2	3005A	6010C	1	05/11/2011 2237	KJC	05/10/2011 1702	59321

Parameter	CAS Number	Analytical Method	Result	Q	PQL	MDL	Units	Run
Arsenic	7440-38-2	6010C	0.017	B	0.010	0.0040	mg/L	2
Barium	7440-39-3	6010C	2.1		0.025	0.0075	mg/L	1
Cadmium	7440-43-9	6010C	ND		0.0020	0.00060	mg/L	1
Chromium	7440-47-3	6010C	0.14		0.0050	0.0021	mg/L	1
Lead	7439-92-1	6010C	0.25		0.010	0.0019	mg/L	1
Mercury	7439-97-6	7470A	0.0026		0.00010	0.000053	mg/L	1
Selenium	7782-49-2	6010C	0.017	B	0.010	0.0026	mg/L	2
Silver	7440-22-4	6010C	ND		0.0050	0.00040	mg/L	1

PQL = Practical quantitation limit
ND = Not detected at or above the MDL
Where applicable, all soil sample analysis are reported on a dry weight basis unless flagged with a "W"
B = Detected in the method blank
J = Estimated result < PQL and ≥ MDL
E = Quantitation of compound exceeded the calibration range
P = The RPD between two GC columns exceeds 40%
N = Recovery is out of criteria
H = Out of holding time

Volatile Organic Compounds by GC/MS

Client: ARCADIS U.S., Inc.
Laboratory ID: ME10010-008
Description: Trip Blank(050611)
Matrix: Aqueous
Date Sampled: 05/06/2011 0900
Date Received: 05/10/2011

Run	Prep Method	Analytical Method	Dilution	Analysis Date	Analyst	Prep Date	Batch
1	5030B	8260B	1	05/16/2011 0847	LBS		59649

Parameter	CAS Number	Analytical Method	Result	Q	PQL	MDL	Units	Run
Acetone	67-64-1	8260B	ND		20	6.7	ug/L	1
Benzene	71-43-2	8260B	ND		1.0	0.13	ug/L	1
Bromodichloromethane	75-27-4	8260B	ND		1.0	0.33	ug/L	1
Bromoform	75-25-2	8260B	ND		1.0	0.66	ug/L	1
Bromomethane (Methyl bromide)	74-83-9	8260B	ND		2.0	0.80	ug/L	1
2-Butanone (MEK)	78-93-3	8260B	ND		10	2.0	ug/L	1
Carbon disulfide	75-15-0	8260B	ND		1.0	0.097	ug/L	1
Carbon tetrachloride	56-23-5	8260B	ND		1.0	0.14	ug/L	1
Chlorobenzene	108-90-7	8260B	ND		2.0	0.33	ug/L	1
Chloroethane	75-00-3	8260B	ND		2.0	0.47	ug/L	1
Chloroform	67-66-3	8260B	ND		1.0	0.33	ug/L	1
Chloromethane (Methyl chloride)	74-87-3	8260B	ND		1.0	0.35	ug/L	1
Dibromochloromethane	124-48-1	8260B	ND		1.0	0.33	ug/L	1
1,4-Dichlorobenzene	106-46-7	8260B	ND		1.0	0.33	ug/L	1
1,3-Dichlorobenzene	541-73-1	8260B	ND		1.0	0.33	ug/L	1
1,2-Dichlorobenzene	95-50-1	8260B	ND		1.0	0.33	ug/L	1
1,2-Dichloroethane	107-06-2	8260B	ND		1.0	0.15	ug/L	1
1,1-Dichloroethane	75-34-3	8260B	ND		1.0	0.13	ug/L	1
trans-1,2-Dichloroethene	156-60-5	8260B	ND		1.0	0.21	ug/L	1
cis-1,2-Dichloroethene	156-59-2	8260B	ND		1.0	0.12	ug/L	1
1,1-Dichloroethene	75-35-4	8260B	ND		1.0	0.16	ug/L	1
1,2-Dichloropropane	78-87-5	8260B	ND		1.0	0.19	ug/L	1
trans-1,3-Dichloropropene	10061-02-6	8260B	ND		1.0	0.11	ug/L	1
cis-1,3-Dichloropropene	10061-01-5	8260B	ND		1.0	0.092	ug/L	1
Ethylbenzene	100-41-4	8260B	ND		1.0	0.33	ug/L	1
2-Hexanone	591-78-6	8260B	ND		10	0.27	ug/L	1
Methyl tertiary butyl ether (MTBE)	1634-04-4	8260B	ND		1.0	0.40	ug/L	1
4-Methyl-2-pentanone	108-10-1	8260B	ND		10	0.31	ug/L	1
Methylene chloride	75-09-2	8260B	ND		1.0	0.33	ug/L	1
Styrene	100-42-5	8260B	ND		1.0	0.12	ug/L	1
1,1,2,2-Tetrachloroethane	79-34-5	8260B	ND		1.0	0.16	ug/L	1
Tetrachloroethene	127-18-4	8260B	ND		1.0	0.13	ug/L	1
Toluene	108-88-3	8260B	ND		1.0	0.33	ug/L	1
1,2,4-Trichlorobenzene	120-82-1	8260B	ND		1.0	0.51	ug/L	1
1,1,2-Trichloroethane	79-00-5	8260B	ND		1.0	0.21	ug/L	1
1,1,1-Trichloroethane	71-55-6	8260B	ND		1.0	0.074	ug/L	1
Trichloroethene	79-01-6	8260B	ND		1.0	0.18	ug/L	1
Vinyl chloride	75-01-4	8260B	ND		1.0	0.054	ug/L	1
Xylenes (total)	1330-20-7	8260B	ND		1.0	0.33	ug/L	1

PQL = Practical quantitation limit
B = Detected in the method blank
E = Quantitation of compound exceeded the calibration range
ND = Not detected at or above the MDL
J = Estimated result < PQL and ≥ MDL
P = The RPD between two GC columns exceeds 40%
Where applicable, all soil sample analysis are reported on a dry weight basis unless flagged with a "W"
N = Recovery is out of criteria
H = Out of holding time

Volatile Organic Compounds by GC/MS

Client: ARCADIS U.S., Inc.
Laboratory ID: ME10010-008
Description: Trip Blank(050611)
Matrix: Aqueous
Date Sampled: 05/06/2011 0900
Date Received: 05/10/2011

Surrogate	Q	Run 1 % Recovery	Acceptance Limits
1,2-Dichloroethane-d4		83	70-130
Bromofluorobenzene		90	70-130
Toluene-d8		100	70-130

PQL = Practical quantitation limit
B = Detected in the method blank
E = Quantitation of compound exceeded the calibration range
ND = Not detected at or above the MDL
J = Estimated result < PQL and ≥ MDL
P = The RPD between two GC columns exceeds 40%
Where applicable, all soil sample analysis are reported on a dry weight basis unless flagged with a "W"
N = Recovery is out of criteria
H = Out of holding time

QC Summary

Volatile Organic Compounds by GC/MS - MB

Sample ID: MQ59649-001
Batch: 59649
Analytical Method: 8260B

Matrix: Aqueous
Prep Method: 5030B

Parameter	Result	Q	Dil	PQL	MDL	Units	Analysis Date
Acetone	ND		1	20	6.7	ug/L	05/16/2011 0012
Benzene	ND		1	1.0	0.13	ug/L	05/16/2011 0012
Bromodichloromethane	ND		1	1.0	0.33	ug/L	05/16/2011 0012
Bromoform	ND		1	1.0	0.66	ug/L	05/16/2011 0012
Bromomethane (Methyl bromide)	ND		1	2.0	0.80	ug/L	05/16/2011 0012
2-Butanone (MEK)	ND		1	10	2.0	ug/L	05/16/2011 0012
Carbon disulfide	ND		1	1.0	0.097	ug/L	05/16/2011 0012
Carbon tetrachloride	ND		1	1.0	0.14	ug/L	05/16/2011 0012
Chlorobenzene	ND		1	2.0	0.33	ug/L	05/16/2011 0012
Chloroethane	ND		1	2.0	0.47	ug/L	05/16/2011 0012
Chloroform	ND		1	1.0	0.33	ug/L	05/16/2011 0012
Chloromethane (Methyl chloride)	ND		1	1.0	0.35	ug/L	05/16/2011 0012
Dibromochloromethane	ND		1	1.0	0.33	ug/L	05/16/2011 0012
1,2-Dichlorobenzene	ND		1	1.0	0.33	ug/L	05/16/2011 0012
1,3-Dichlorobenzene	ND		1	1.0	0.33	ug/L	05/16/2011 0012
1,4-Dichlorobenzene	ND		1	1.0	0.33	ug/L	05/16/2011 0012
1,1-Dichloroethane	ND		1	1.0	0.13	ug/L	05/16/2011 0012
1,2-Dichloroethane	ND		1	1.0	0.15	ug/L	05/16/2011 0012
1,1-Dichloroethene	ND		1	1.0	0.16	ug/L	05/16/2011 0012
cis-1,2-Dichloroethene	ND		1	1.0	0.12	ug/L	05/16/2011 0012
trans-1,2-Dichloroethene	ND		1	1.0	0.21	ug/L	05/16/2011 0012
1,2-Dichloropropane	ND		1	1.0	0.19	ug/L	05/16/2011 0012
cis-1,3-Dichloropropene	ND		1	1.0	0.092	ug/L	05/16/2011 0012
trans-1,3-Dichloropropene	ND		1	1.0	0.11	ug/L	05/16/2011 0012
Ethylbenzene	ND		1	1.0	0.33	ug/L	05/16/2011 0012
2-Hexanone	ND		1	10	0.27	ug/L	05/16/2011 0012
Methyl tertiary butyl ether (MTBE)	ND		1	1.0	0.40	ug/L	05/16/2011 0012
4-Methyl-2-pentanone	ND		1	10	0.31	ug/L	05/16/2011 0012
Methylene chloride	ND		1	1.0	0.33	ug/L	05/16/2011 0012
Styrene	ND		1	1.0	0.12	ug/L	05/16/2011 0012
1,1,2,2-Tetrachloroethane	ND		1	1.0	0.16	ug/L	05/16/2011 0012
Tetrachloroethene	ND		1	1.0	0.13	ug/L	05/16/2011 0012
Toluene	ND		1	1.0	0.33	ug/L	05/16/2011 0012
1,2,4-Trichlorobenzene	ND		1	1.0	0.51	ug/L	05/16/2011 0012
1,1,1-Trichloroethane	ND		1	1.0	0.074	ug/L	05/16/2011 0012
1,1,2-Trichloroethane	ND		1	1.0	0.21	ug/L	05/16/2011 0012
Trichloroethene	ND		1	1.0	0.18	ug/L	05/16/2011 0012
Vinyl chloride	ND		1	1.0	0.054	ug/L	05/16/2011 0012
Xylenes (total)	ND		1	1.0	0.33	ug/L	05/16/2011 0012

Surrogate	Q	% Rec	Acceptance Limit
Bromofluorobenzene		94	70-130
1,2-Dichloroethane-d4		100	70-130
Toluene-d8		96	70-130

PQL = Practical quantitation limit
ND = Not detected at or above the MDL
P = The RPD between two GC columns exceeds 40%
J = Estimated result < PQL and ≥ MDL
N - Recovery is out of criteria
+ - RPD is out of criteria

Where applicable, all soil sample analysis are reported on a dry weight basis unless flagged with a "W"

Note: Calculations are performed before rounding to avoid round-off errors in calculated results

Volatile Organic Compounds by GC/MS - LCS

Sample ID: MQ59649-002
Batch: 59649
Analytical Method: 8260B

Matrix: Aqueous
Prep Method: 5030B

Parameter	Spike Amount (ug/L)	Result (ug/L)	Q	Dil	% Rec	% Rec Limit	Analysis Date
Acetone	100	100		1	100	70-130	05/15/2011 2210
Benzene	50	47		1	94	70-130	05/15/2011 2210
Bromodichloromethane	50	47		1	94	70-130	05/15/2011 2210
Bromoform	50	43		1	86	70-130	05/15/2011 2210
Bromomethane (Methyl bromide)	50	48		1	96	70-130	05/15/2011 2210
2-Butanone (MEK)	100	81		1	81	60-140	05/15/2011 2210
Carbon disulfide	50	49		1	99	60-140	05/15/2011 2210
Carbon tetrachloride	50	49		1	99	70-130	05/15/2011 2210
Chlorobenzene	50	46		1	91	70-130	05/15/2011 2210
Chloroethane	50	51		1	101	70-130	05/15/2011 2210
Chloroform	50	47		1	93	70-130	05/15/2011 2210
Chloromethane (Methyl chloride)	50	60		1	121	70-130	05/15/2011 2210
Dibromochloromethane	50	47		1	95	70-130	05/15/2011 2210
1,2-Dichlorobenzene	50	47		1	93	70-130	05/15/2011 2210
1,3-Dichlorobenzene	50	48		1	96	70-130	05/15/2011 2210
1,4-Dichlorobenzene	50	47		1	93	70-130	05/15/2011 2210
1,1-Dichloroethane	50	49		1	98	70-130	05/15/2011 2210
1,2-Dichloroethane	50	49		1	98	70-130	05/15/2011 2210
1,1-Dichloroethene	50	46		1	91	70-130	05/15/2011 2210
cis-1,2-Dichloroethene	50	46		1	91	70-130	05/15/2011 2210
trans-1,2-Dichloroethene	50	46		1	92	70-130	05/15/2011 2210
1,2-Dichloropropane	50	48		1	96	70-130	05/15/2011 2210
cis-1,3-Dichloropropene	50	49		1	99	70-130	05/15/2011 2210
trans-1,3-Dichloropropene	50	48		1	96	70-130	05/15/2011 2210
Ethylbenzene	50	47		1	93	70-130	05/15/2011 2210
2-Hexanone	100	84		1	84	60-140	05/15/2011 2210
Methyl tertiary butyl ether (MTBE)	50	45		1	91	60-140	05/15/2011 2210
4-Methyl-2-pentanone	100	89		1	89	60-140	05/15/2011 2210
Methylene chloride	50	45		1	90	70-130	05/15/2011 2210
Styrene	50	48		1	96	70-130	05/15/2011 2210
1,1,2,2-Tetrachloroethane	50	41		1	82	60-140	05/15/2011 2210
Tetrachloroethene	50	47		1	95	70-130	05/15/2011 2210
Toluene	50	47		1	94	70-130	05/15/2011 2210
1,2,4-Trichlorobenzene	50	49		1	99	70-130	05/15/2011 2210
1,1,1-Trichloroethane	50	47		1	93	70-130	05/15/2011 2210
1,1,2-Trichloroethane	50	43		1	85	70-130	05/15/2011 2210
Trichloroethene	50	46		1	93	70-130	05/15/2011 2210
Vinyl chloride	50	50		1	100	70-130	05/15/2011 2210
Xylenes (total)	100	95		1	95	70-130	05/15/2011 2210

Surrogate	Q	% Rec	Acceptance Limit
Bromofluorobenzene		99	70-130
1,2-Dichloroethane-d4		99	70-130
Toluene-d8		98	70-130

PQL = Practical quantitation limit
ND = Not detected at or above the MDL
P = The RPD between two GC columns exceeds 40%
J = Estimated result < PQL and ≥ MDL
N - Recovery is out of criteria
+ - RPD is out of criteria

Where applicable, all soil sample analysis are reported on a dry weight basis unless flagged with a "W"

Note: Calculations are performed before rounding to avoid round-off errors in calculated results

Volatile Organic Compounds by GC/MS - LCSD

Sample ID: MQ59649-003
Batch: 59649
Analytical Method: 8260B

Matrix: Aqueous
Prep Method: 5030B

Parameter	Spike Amount (ug/L)	Result (ug/L)	Q	Dil	% Rec	% RPD	% Rec Limit	% RPD Limit	Analysis Date
Acetone	100	120		1	116	16	70-130	20	05/15/2011 2231
Benzene	50	48		1	96	1.5	70-130	20	05/15/2011 2231
Bromodichloromethane	50	48		1	97	2.8	70-130	20	05/15/2011 2231
Bromoform	50	44		1	88	3.2	70-130	20	05/15/2011 2231
Bromomethane (Methyl bromide)	50	47		1	94	1.9	70-130	20	05/15/2011 2231
2-Butanone (MEK)	100	90		1	90	9.9	60-140	20	05/15/2011 2231
Carbon disulfide	50	51		1	102	3.8	60-140	20	05/15/2011 2231
Carbon tetrachloride	50	51		1	101	2.6	70-130	20	05/15/2011 2231
Chlorobenzene	50	47		1	93	2.2	70-130	20	05/15/2011 2231
Chloroethane	50	49		1	98	3.1	70-130	20	05/15/2011 2231
Chloroform	50	47		1	95	1.4	70-130	20	05/15/2011 2231
Chloromethane (Methyl chloride)	50	62		1	124	3.1	70-130	20	05/15/2011 2231
Dibromochloromethane	50	48		1	97	1.9	70-130	20	05/15/2011 2231
1,2-Dichlorobenzene	50	47		1	95	1.6	70-130	20	05/15/2011 2231
1,3-Dichlorobenzene	50	48		1	96	0.19	70-130	20	05/15/2011 2231
1,4-Dichlorobenzene	50	47		1	95	1.2	70-130	20	05/15/2011 2231
1,1-Dichloroethane	50	50		1	100	1.9	70-130	20	05/15/2011 2231
1,2-Dichloroethane	50	49		1	99	1.1	70-130	20	05/15/2011 2231
1,1-Dichloroethene	50	47		1	94	2.7	70-130	20	05/15/2011 2231
cis-1,2-Dichloroethene	50	46		1	92	1.5	70-130	20	05/15/2011 2231
trans-1,2-Dichloroethene	50	46		1	93	0.95	70-130	20	05/15/2011 2231
1,2-Dichloropropane	50	49		1	98	1.7	70-130	20	05/15/2011 2231
cis-1,3-Dichloropropene	50	50		1	101	2.1	70-130	20	05/15/2011 2231
trans-1,3-Dichloropropene	50	49		1	97	0.96	70-130	20	05/15/2011 2231
Ethylbenzene	50	47		1	94	1.2	70-130	20	05/15/2011 2231
2-Hexanone	100	94		1	94	10	60-140	20	05/15/2011 2231
Methyl tertiary butyl ether (MTBE)	50	47		1	94	3.5	60-140	20	05/15/2011 2231
4-Methyl-2-pentanone	100	97		1	97	8.5	60-140	20	05/15/2011 2231
Methylene chloride	50	46		1	92	2.2	70-130	20	05/15/2011 2231
Styrene	50	49		1	98	1.9	70-130	20	05/15/2011 2231
1,1,2,2-Tetrachloroethane	50	42		1	85	3.8	60-140	20	05/15/2011 2231
Tetrachloroethene	50	48		1	95	0.94	70-130	20	05/15/2011 2231
Toluene	50	48		1	97	2.2	70-130	20	05/15/2011 2231
1,2,4-Trichlorobenzene	50	50		1	100	1.2	70-130	20	05/15/2011 2231
1,1,1-Trichloroethane	50	48		1	96	2.9	70-130	20	05/15/2011 2231
1,1,2-Trichloroethane	50	43		1	87	1.6	70-130	20	05/15/2011 2231
Trichloroethene	50	47		1	95	2.4	70-130	20	05/15/2011 2231
Vinyl chloride	50	50		1	99	0.41	70-130	20	05/15/2011 2231
Xylenes (total)	100	96		1	96	1.2	70-130	20	05/15/2011 2231

Surrogate	Q	% Rec	Acceptance Limit
Bromofluorobenzene		98	70-130
1,2-Dichloroethane-d4		99	70-130
Toluene-d8		97	70-130

PQL = Practical quantitation limit
ND = Not detected at or above the MDL
P = The RPD between two GC columns exceeds 40%
J = Estimated result < PQL and ≥ MDL
N - Recovery is out of criteria
+ - RPD is out of criteria

Where applicable, all soil sample analysis are reported on a dry weight basis unless flagged with a "W"

Note: Calculations are performed before rounding to avoid round-off errors in calculated results

Semivolatile Organic Compounds by GC/MS - MB

Sample ID: MQ59361-001
Batch: 59361
Analytical Method: 8270D

Matrix: Aqueous
Prep Method: 3520C
Prep Date: 05/11/2011 1331

Parameter	Result	Q	Dil	PQL	MDL	Units	Analysis Date
2,4,5-Trichlorophenol	ND		1	1.0	0.18	ug/L	05/16/2011 1700
2,4,6-Trichlorophenol	ND		1	1.0	0.22	ug/L	05/16/2011 1700
2,4-Dichlorophenol	ND		1	1.0	0.15	ug/L	05/16/2011 1700
2,4-Dimethylphenol	ND		1	1.0	0.31	ug/L	05/16/2011 1700
2,4-Dinitrophenol	ND		1	5.0	0.25	ug/L	05/16/2011 1700
2,4-Dinitrotoluene	ND		1	2.0	0.45	ug/L	05/16/2011 1700
2,6-Dinitrotoluene	ND		1	2.0	0.40	ug/L	05/16/2011 1700
2-Chloronaphthalene	ND		1	1.0	0.12	ug/L	05/16/2011 1700
2-Chlorophenol	ND		1	1.0	0.13	ug/L	05/16/2011 1700
2-Methylnaphthalene	ND		1	1.0	0.080	ug/L	05/16/2011 1700
2-Methylphenol	ND		1	1.0	0.17	ug/L	05/16/2011 1700
2-Nitroaniline	ND		1	2.0	0.55	ug/L	05/16/2011 1700
2-Nitrophenol	ND		1	2.0	0.27	ug/L	05/16/2011 1700
3 & 4-Methylphenol	ND		1	2.0	0.57	ug/L	05/16/2011 1700
3,3'-Dichlorobenzidine	ND		1	5.0	0.81	ug/L	05/16/2011 1700
3-Nitroaniline	ND		1	2.0	0.77	ug/L	05/16/2011 1700
4,6-Dinitro-2-methylphenol	ND		1	5.0	1.5	ug/L	05/16/2011 1700
4-Bromophenyl phenyl ether	ND		1	1.0	0.12	ug/L	05/16/2011 1700
4-Chloro-3-methyl phenol	ND		1	1.0	0.22	ug/L	05/16/2011 1700
4-Chloroaniline	ND		1	1.0	0.13	ug/L	05/16/2011 1700
4-Chlorophenyl phenyl ether	ND		1	1.0	0.11	ug/L	05/16/2011 1700
4-Nitroaniline	ND		1	2.0	0.39	ug/L	05/16/2011 1700
4-Nitrophenol	ND		1	5.0	0.64	ug/L	05/16/2011 1700
Acenaphthene	ND		1	1.0	0.090	ug/L	05/16/2011 1700
Acenaphthylene	ND		1	1.0	0.16	ug/L	05/16/2011 1700
Anthracene	ND		1	1.0	0.13	ug/L	05/16/2011 1700
Benzo(a)anthracene	ND		1	1.0	0.15	ug/L	05/16/2011 1700
Benzo(a)pyrene	ND		1	1.0	0.16	ug/L	05/16/2011 1700
Benzo(b)fluoranthene	ND		1	1.0	0.20	ug/L	05/16/2011 1700
Benzo(g,h,i)perylene	ND		1	1.0	0.23	ug/L	05/16/2011 1700
Benzo(k)fluoranthene	ND		1	1.0	0.12	ug/L	05/16/2011 1700
bis(2-Chloroethoxy)methane	ND		1	1.0	0.13	ug/L	05/16/2011 1700
bis(2-Chloroisopropyl)ether	ND		1	1.0	0.080	ug/L	05/16/2011 1700
bis(2-Ethylhexyl)phthalate	ND		1	5.0	1.7	ug/L	05/16/2011 1700
Butyl benzyl phthalate	ND		1	5.0	1.7	ug/L	05/16/2011 1700
Carbazole	ND		1	1.0	0.25	ug/L	05/16/2011 1700
Chrysene	ND		1	1.0	0.12	ug/L	05/16/2011 1700
Di-n-butyl phthalate	ND		1	5.0	1.7	ug/L	05/16/2011 1700
Di-n-octylphthalate	ND		1	5.0	1.7	ug/L	05/16/2011 1700
Dibenzo(a,h)anthracene	ND		1	1.0	0.13	ug/L	05/16/2011 1700
Dibenzofuran	ND		1	1.0	0.16	ug/L	05/16/2011 1700
Diethylphthalate	ND		1	5.0	1.7	ug/L	05/16/2011 1700
Dimethyl phthalate	ND		1	5.0	1.7	ug/L	05/16/2011 1700
Fluoranthene	ND		1	1.0	0.21	ug/L	05/16/2011 1700

PQL = Practical quantitation limit
ND = Not detected at or above the MDL
P = The RPD between two GC columns exceeds 40%
J = Estimated result < PQL and ≥ MDL
N - Recovery is out of criteria
+ - RPD is out of criteria

Where applicable, all soil sample analysis are reported on a dry weight basis unless flagged with a "W"

Note: Calculations are performed before rounding to avoid round-off errors in calculated results

Semivolatile Organic Compounds by GC/MS - MB

Sample ID: MQ59361-001
Batch: 59361
Analytical Method: 8270D

Matrix: Aqueous
Prep Method: 3520C
Prep Date: 05/11/2011 1331

Parameter	Result	Q	Dil	PQL	MDL	Units	Analysis Date
Fluorene	ND		1	1.0	0.10	ug/L	05/16/2011 1700
Hexachlorobenzene	ND		1	1.0	0.21	ug/L	05/16/2011 1700
Hexachlorobutadiene	ND		1	1.0	0.090	ug/L	05/16/2011 1700
Hexachlorocyclopentadiene	ND		1	5.0	0.23	ug/L	05/16/2011 1700
Hexachloroethane	ND		1	1.0	0.11	ug/L	05/16/2011 1700
Indeno(1,2,3-c,d)pyrene	ND		1	1.0	0.23	ug/L	05/16/2011 1700
Isophorone	ND		1	1.0	0.080	ug/L	05/16/2011 1700
N-Nitrosodi-n-propylamine	ND		1	1.0	0.080	ug/L	05/16/2011 1700
N-Nitrosodiphenylamine (Diphenylamine)	ND		1	1.0	0.38	ug/L	05/16/2011 1700
Naphthalene	ND		1	1.0	0.070	ug/L	05/16/2011 1700
Nitrobenzene	ND		1	1.0	0.10	ug/L	05/16/2011 1700
Pentachlorophenol	ND		1	5.0	0.54	ug/L	05/16/2011 1700
Phenanthrene	ND		1	1.0	0.18	ug/L	05/16/2011 1700
Phenol	ND		1	1.0	0.11	ug/L	05/16/2011 1700
Pyrene	ND		1	1.0	0.16	ug/L	05/16/2011 1700

Surrogate	Q	% Rec	Acceptance Limit
2,4,6-Tribromophenol		59	41-144
2-Fluorobiphenyl		57	37-129
2-Fluorophenol		56	24-127
Nitrobenzene-d5		54	38-127
Phenol-d5		56	28-128
Terphenyl-d14		54	10-148

PQL = Practical quantitation limit
ND = Not detected at or above the MDL
P = The RPD between two GC columns exceeds 40%
J = Estimated result < PQL and ≥ MDL
N - Recovery is out of criteria
+ - RPD is out of criteria

Where applicable, all soil sample analysis are reported on a dry weight basis unless flagged with a "W"

Note: Calculations are performed before rounding to avoid round-off errors in calculated results

Semivolatile Organic Compounds by GC/MS - LCS

Sample ID: MQ59361-002
Batch: 59361
Analytical Method: 8270D

Matrix: Aqueous
Prep Method: 3520C
Prep Date: 05/11/2011 1331

Parameter	Spike Amount (ug/L)	Result (ug/L)	Q	Dil	% Rec	% Rec Limit	Analysis Date
2,4,5-Trichlorophenol	20	13		1	63	46-125	05/16/2011 1720
2,4,6-Trichlorophenol	20	12		1	61	36-123	05/16/2011 1720
2,4-Dichlorophenol	20	13		1	63	38-127	05/16/2011 1720
2,4-Dimethylphenol	20	12		1	58	36-110	05/16/2011 1720
2,4-Dinitrophenol	100	71		1	71	33-143	05/16/2011 1720
2,4-Dinitrotoluene	40	25		1	61	55-137	05/16/2011 1720
2,6-Dinitrotoluene	40	25		1	63	53-128	05/16/2011 1720
2-Chloronaphthalene	20	13		1	64	42-132	05/16/2011 1720
2-Chlorophenol	20	12		1	59	40-128	05/16/2011 1720
2-Methylnaphthalene	20	12		1	59	49-122	05/16/2011 1720
2-Methylphenol	20	11		1	53	33-122	05/16/2011 1720
2-Nitroaniline	40	24		1	61	48-126	05/16/2011 1720
2-Nitrophenol	40	24		1	60	44-131	05/16/2011 1720
3 & 4-Methylphenol	40	24		1	59	48-112	05/16/2011 1720
3-Nitroaniline	40	21		1	53	29-109	05/16/2011 1720
4,6-Dinitro-2-methylphenol	100	67		1	67	46-151	05/16/2011 1720
4-Bromophenyl phenyl ether	20	13		1	66	49-123	05/16/2011 1720
4-Chloro-3-methyl phenol	20	12		1	62	48-136	05/16/2011 1720
4-Chloroaniline	20	3.2	N	1	16	18-73	05/16/2011 1720
4-Chlorophenyl phenyl ether	20	13		1	63	34-124	05/16/2011 1720
4-Nitroaniline	40	24		1	61	42-154	05/16/2011 1720
4-Nitrophenol	100	61		1	61	43-145	05/16/2011 1720
Acenaphthene	20	12		1	61	51-130	05/16/2011 1720
Acenaphthylene	20	13		1	65	46-131	05/16/2011 1720
Anthracene	20	12		1	59	48-122	05/16/2011 1720
Benzo(a)anthracene	20	12		1	59	50-143	05/16/2011 1720
Benzo(a)pyrene	20	13		1	63	55-141	05/16/2011 1720
Benzo(b)fluoranthene	20	12		1	60	48-147	05/16/2011 1720
Benzo(g,h,i)perylene	20	15		1	73	48-139	05/16/2011 1720
Benzo(k)fluoranthene	20	12		1	59	48-148	05/16/2011 1720
bis(2-Chloroethoxy)methane	20	12		1	60	46-130	05/16/2011 1720
bis(2-Chloroisopropyl)ether	20	11		1	54	36-133	05/16/2011 1720
bis(2-Ethylhexyl)phthalate	20	11		1	55	40-141	05/16/2011 1720
Butyl benzyl phthalate	20	13		1	65	52-142	05/16/2011 1720
Carbazole	20	11		1	55	45-101	05/16/2011 1720
Chrysene	20	11		1	54	51-137	05/16/2011 1720
Di-n-butyl phthalate	20	12		1	61	50-134	05/16/2011 1720
Di-n-octylphthalate	20	13		1	64	50-136	05/16/2011 1720
Dibenzo(a,h)anthracene	20	14		1	72	48-139	05/16/2011 1720
Dibenzofuran	20	12		1	60	45-142	05/16/2011 1720
Diethylphthalate	20	12		1	61	48-124	05/16/2011 1720
Dimethyl phthalate	20	12		1	61	43-122	05/16/2011 1720
Fluoranthene	20	12		1	61	50-124	05/16/2011 1720
Fluorene	20	12		1	62	39-122	05/16/2011 1720

PQL = Practical quantitation limit
ND = Not detected at or above the MDL
P = The RPD between two GC columns exceeds 40%
J = Estimated result < PQL and ≥ MDL
N - Recovery is out of criteria
+ - RPD is out of criteria

Where applicable, all soil sample analysis are reported on a dry weight basis unless flagged with a "W"

Note: Calculations are performed before rounding to avoid round-off errors in calculated results

Semivolatile Organic Compounds by GC/MS - LCS

Sample ID: MQ59361-002
Batch: 59361
Analytical Method: 8270D

Matrix: Aqueous
Prep Method: 3520C
Prep Date: 05/11/2011 1331

Parameter	Spike Amount (ug/L)	Result (ug/L)	Q	Dil	% Rec	% Rec Limit	Analysis Date
Hexachlorobenzene	20	14		1	69	46-125	05/16/2011 1720
Hexachlorobutadiene	20	13		1	64	38-121	05/16/2011 1720
Hexachlorocyclopentadiene	100	43		1	43	24-110	05/16/2011 1720
Hexachloroethane	20	12		1	59	32-109	05/16/2011 1720
Indeno(1,2,3-c,d)pyrene	20	14		1	70	49-146	05/16/2011 1720
Isophorone	20	12		1	60	43-118	05/16/2011 1720
N-Nitrosodi-n-propylamine	20	11		1	57	46-135	05/16/2011 1720
N-Nitrosodiphenylamine (Diphenylamine)	20	13		1	66	44-124	05/16/2011 1720
Naphthalene	20	12		1	60	45-118	05/16/2011 1720
Nitrobenzene	20	12		1	58	46-131	05/16/2011 1720
Pentachlorophenol	100	71		1	71	30-137	05/16/2011 1720
Phenanthrene	20	12		1	61	49-122	05/16/2011 1720
Phenol	20	12		1	60	35-118	05/16/2011 1720
Pyrene	20	14		1	70	50-130	05/16/2011 1720

Surrogate	Q	% Rec	Acceptance Limit
2,4,6-Tribromophenol		70	41-144
2-Fluorobiphenyl		60	37-129
2-Fluorophenol		61	24-127
Nitrobenzene-d5		58	38-127
Phenol-d5		63	28-128
Terphenyl-d14		62	10-148

PQL = Practical quantitation limit
ND = Not detected at or above the MDL
P = The RPD between two GC columns exceeds 40%
J = Estimated result < PQL and ≥ MDL
N - Recovery is out of criteria
+ - RPD is out of criteria

Where applicable, all soil sample analysis are reported on a dry weight basis unless flagged with a "W"

Note: Calculations are performed before rounding to avoid round-off errors in calculated results

Semivolatile Organic Compounds by GC/MS - MS

Sample ID: ME10010-001MS
Batch: 59361
Analytical Method: 8270D

Matrix: Aqueous
Prep Method: 3520C
Prep Date: 05/11/2011 1331

Parameter	Sample Amount (ug/L)	Spike Amount (ug/L)	Result (ug/L)	Q	Dil	% Rec	% Rec Limit	Analysis Date
Acenaphthene	ND	40	20		1	51	10-133	05/16/2011 1758
Acenaphthylene	ND	40	15		1	38	34-128	05/16/2011 1758
Anthracene	ND	40	7.5	N	1	19	48-122	05/16/2011 1758
Benzo(a)anthracene	ND	40	0.94	N	1	2.4	53-98	05/16/2011 1758
Benzo(a)pyrene	ND	40	0.33	N	1	0.83	11-160	05/16/2011 1758
Benzo(b)fluoranthene	ND	40	0.37	N	1	0.93	10-165	05/16/2011 1758
Benzo(g,h,i)perylene	ND	40	0.23	N	1	0.58	42-111	05/16/2011 1758
Benzo(k)fluoranthene	ND	40	0.38	N	1	0.96	13-175	05/16/2011 1758
4-Bromophenyl phenyl ether	ND	40	15	N	1	38	49-123	05/16/2011 1758
Butyl benzyl phthalate	ND	40	6.7	N	1	17	52-142	05/16/2011 1758
Carbazole	ND	40	18	N	1	44	45-101	05/16/2011 1758
4-Chloro-3-methyl phenol	ND	40	28		1	69	40-98	05/16/2011 1758
4-Chloroaniline	ND	40	6.8		1	17	10-98	05/16/2011 1758
bis(2-Chloroethoxy)methane	ND	40	25		1	63	43-93	05/16/2011 1758
bis(2-Chloroisopropyl)ether	ND	40	22		1	54	36-99	05/16/2011 1758
2-Chloronaphthalene	ND	40	20		1	50	40-89	05/16/2011 1758
2-Chlorophenol	ND	40	24		1	60	33-92	05/16/2011 1758
4-Chlorophenyl phenyl ether	ND	40	18		1	45	34-124	05/16/2011 1758
Chrysene	ND	40	0.83	N	1	2.1	51-107	05/16/2011 1758
Dibenzo(a,h)anthracene	ND	40	0.25	N	1	0.62	47-116	05/16/2011 1758
Dibenzofuran	ND	40	18		1	45	45-94	05/16/2011 1758
2,4-Dichlorophenol	ND	40	28		1	70	34-105	05/16/2011 1758
Diethylphthalate	ND	40	27		1	67	48-124	05/16/2011 1758
Dimethyl phthalate	ND	40	27		1	67	43-122	05/16/2011 1758
2,4-Dimethylphenol	ND	40	28		1	70	33-77	05/16/2011 1758
Di-n-butyl phthalate	ND	40	12	N	1	31	50-134	05/16/2011 1758
4,6-Dinitro-2-methylphenol	ND	200	130		1	66	33-118	05/16/2011 1758
2,4-Dinitrophenol	ND	200	150		1	74	19-119	05/16/2011 1758
2,4-Dinitrotoluene	ND	80	52		1	65	50-104	05/16/2011 1758
2,6-Dinitrotoluene	ND	80	53		1	67	53-128	05/16/2011 1758
Di-n-octylphthalate	ND	40	0.24	N	1	0.59	40-112	05/16/2011 1758
bis(2-Ethylhexyl)phthalate	ND	40	0.47	N	1	1.2	10-142	05/16/2011 1758
Fluoranthene	ND	40	2.9	N	1	7.4	50-124	05/16/2011 1758
Fluorene	ND	40	18		1	44	39-122	05/16/2011 1758
Hexachlorobenzene	ND	40	7.1	N	1	18	46-125	05/16/2011 1758
Hexachlorobutadiene	ND	40	17		1	44	42-94	05/16/2011 1758
Hexachlorocyclopentadiene	ND	200	57		1	28	14-89	05/16/2011 1758
Hexachloroethane	ND	40	22		1	55	39-86	05/16/2011 1758
Indeno(1,2,3-c,d)pyrene	ND	40	0.24	N	1	0.61	43-113	05/16/2011 1758
Isophorone	ND	40	26		1	64	42-84	05/16/2011 1758
2-Methylnaphthalene	ND	40	22		1	55	46-90	05/16/2011 1758
2-Methylphenol	ND	40	24		1	60	33-122	05/16/2011 1758
3 & 4-Methylphenol	ND	80	50		1	63	24-97	05/16/2011 1758
Naphthalene	ND	40	23		1	58	46-89	05/16/2011 1758

PQL = Practical quantitation limit
ND = Not detected at or above the MDL
P = The RPD between two GC columns exceeds 40%
J = Estimated result < PQL and ≥ MDL
N - Recovery is out of criteria
+ - RPD is out of criteria

Where applicable, all soil sample analysis are reported on a dry weight basis unless flagged with a "W"

Note: Calculations are performed before rounding to avoid round-off errors in calculated results

Semivolatile Organic Compounds by GC/MS - MS

Sample ID: ME10010-001MS
Batch: 59361
Analytical Method: 8270D

Matrix: Aqueous
Prep Method: 3520C
Prep Date: 05/11/2011 1331

Parameter	Sample Amount (ug/L)	Spike Amount (ug/L)	Result (ug/L)	Q	Dil	% Rec	% Rec Limit	Analysis Date
2-Nitroaniline	ND	80	52		1	66	48-126	05/16/2011 1758
3-Nitroaniline	ND	80	32		1	40	10-110	05/16/2011 1758
4-Nitroaniline	ND	80	43		1	53	41-99	05/16/2011 1758
Nitrobenzene	ND	40	23		1	58	44-91	05/16/2011 1758
2-Nitrophenol	ND	80	50		1	62	34-102	05/16/2011 1758
4-Nitrophenol	ND	200	130		1	63	29-122	05/16/2011 1758
N-Nitrosodi-n-propylamine	ND	40	22		1	56	41-96	05/16/2011 1758
N-Nitrosodiphenylamine (Diphenylamine)	ND	40	16		1	39	10-150	05/16/2011 1758
Pentachlorophenol	ND	200	99		1	49	32-110	05/16/2011 1758
Phenanthrene	ND	40	9.2	N	1	23	49-122	05/16/2011 1758
Phenol	ND	40	24		1	61	33-92	05/16/2011 1758
Pyrene	ND	40	2.4	N	1	6.0	50-130	05/16/2011 1758
2,4,5-Trichlorophenol	ND	40	27		1	67	46-125	05/16/2011 1758
2,4,6-Trichlorophenol	ND	40	26		1	66	36-123	05/16/2011 1758

Surrogate	Q	% Rec	Acceptance Limit
2-Fluorobiphenyl		53	37-129
2-Fluorophenol		57	24-127
Nitrobenzene-d5		57	38-127
Phenol-d5		61	28-128
Terphenyl-d14	N	6.1	10-148
2,4,6-Tribromophenol		66	41-144

PQL = Practical quantitation limit
ND = Not detected at or above the MDL
P = The RPD between two GC columns exceeds 40%
J = Estimated result < PQL and ≥ MDL
N - Recovery is out of criteria
+ - RPD is out of criteria

Where applicable, all soil sample analysis are reported on a dry weight basis unless flagged with a "W"

Note: Calculations are performed before rounding to avoid round-off errors in calculated results

Semivolatile Organic Compounds by GC/MS - MSD

Sample ID: ME10010-001MD
Batch: 59361
Analytical Method: 8270D

Matrix: Aqueous
Prep Method: 3520C
Prep Date: 05/11/2011 1331

Parameter	Sample Amount (ug/L)	Spike Amount (ug/L)	Result (ug/L)	Q	Dil	% Rec	% RPD	% Rec Limit	% RPD Limit	Analysis Date
Acenaphthene	ND	40	21		1	53	3.0	10-133	40	05/16/2011 1817
Acenaphthylene	ND	40	16		1	40	3.3	34-128	40	05/16/2011 1817
Anthracene	ND	40	8.6	N	1	21	13	48-122	40	05/16/2011 1817
Benzo(a)anthracene	ND	40	1.1	N	1	2.9	19	53-98	40	05/16/2011 1817
Benzo(a)pyrene	ND	40	0.45	N	1	1.1	29	11-160	40	05/16/2011 1817
Benzo(b)fluoranthene	ND	40	0.51	N	1	1.3	31	10-165	40	05/16/2011 1817
Benzo(g,h,i)perylene	ND	40	0.29	N	1	0.74	24	42-111	40	05/16/2011 1817
Benzo(k)fluoranthene	ND	40	0.56	N	1	1.4	37	13-175	40	05/16/2011 1817
4-Bromophenyl phenyl ether	ND	40	17	N	1	42	12	49-123	40	05/16/2011 1817
Butyl benzyl phthalate	ND	40	8.1	N	1	20	18	52-142	40	05/16/2011 1817
Carbazole	ND	40	18		1	45	1.2	45-101	40	05/16/2011 1817
4-Chloro-3-methyl phenol	ND	40	28		1	70	1.7	40-98	40	05/16/2011 1817
4-Chloroaniline	ND	40	3.9	N,+	1	9.8	54	10-98	40	05/16/2011 1817
bis(2-Chloroethoxy)methane	ND	40	24		1	60	4.4	43-93	40	05/16/2011 1817
bis(2-Chloroisopropyl)ether	ND	40	23		1	58	6.6	36-99	40	05/16/2011 1817
2-Chloronaphthalene	ND	40	23		1	57	12	40-89	40	05/16/2011 1817
2-Chlorophenol	ND	40	26		1	65	8.2	33-92	40	05/16/2011 1817
4-Chlorophenyl phenyl ether	ND	40	20		1	49	7.5	34-124	40	05/16/2011 1817
Chrysene	ND	40	1.0	N	1	2.5	20	51-107	40	05/16/2011 1817
Dibenzo(a,h)anthracene	ND	40	0.39	N,+	1	0.98	45	47-116	40	05/16/2011 1817
Dibenzofuran	ND	40	20		1	49	8.5	45-94	40	05/16/2011 1817
2,4-Dichlorophenol	ND	40	28		1	70	0.41	34-105	40	05/16/2011 1817
Diethylphthalate	ND	40	26		1	65	2.0	48-124	40	05/16/2011 1817
Dimethyl phthalate	ND	40	26		1	66	0.90	43-122	40	05/16/2011 1817
2,4-Dimethylphenol	ND	40	28		1	71	0.86	33-77	40	05/16/2011 1817
Di-n-butyl phthalate	ND	40	14	N	1	34	10	50-134	40	05/16/2011 1817
4,6-Dinitro-2-methylphenol	ND	200	130		1	67	0.95	33-118	40	05/16/2011 1817
2,4-Dinitrophenol	ND	200	150		1	76	2.0	19-119	40	05/16/2011 1817
2,4-Dinitrotoluene	ND	80	52		1	65	0.32	50-104	40	05/16/2011 1817
2,6-Dinitrotoluene	ND	80	54		1	67	1.2	53-128	40	05/16/2011 1817
Di-n-octylphthalate	ND	40	0.39	N,+	1	0.96	49	40-112	40	05/16/2011 1817
bis(2-Ethylhexyl)phthalate	ND	40	0.70	N	1	1.8	39	10-142	40	05/16/2011 1817
Fluoranthene	ND	40	3.5	N	1	8.7	17	50-124	40	05/16/2011 1817
Fluorene	ND	40	20		1	50	11	39-122	40	05/16/2011 1817
Hexachlorobenzene	ND	40	8.9	N	1	22	22	46-125	40	05/16/2011 1817
Hexachlorobutadiene	ND	40	19		1	48	9.7	42-94	40	05/16/2011 1817
Hexachlorocyclopentadiene	ND	200	61		1	30	6.9	14-89	40	05/16/2011 1817
Hexachloroethane	ND	40	22		1	56	1.7	39-86	40	05/16/2011 1817
Indeno(1,2,3-c,d)pyrene	ND	40	0.31	N	1	0.78	25	43-113	40	05/16/2011 1817
Isophorone	ND	40	26		1	66	2.6	42-84	40	05/16/2011 1817
2-Methylnaphthalene	ND	40	23		1	57	2.9	46-90	40	05/16/2011 1817
2-Methylphenol	ND	40	25		1	62	3.9	33-122	40	05/16/2011 1817
3 & 4-Methylphenol	ND	80	53		1	66	4.3	24-97	40	05/16/2011 1817
Naphthalene	ND	40	24		1	60	2.7	46-89	40	05/16/2011 1817

PQL = Practical quantitation limit
ND = Not detected at or above the MDL
P = The RPD between two GC columns exceeds 40%
J = Estimated result < PQL and ≥ MDL
N - Recovery is out of criteria
+ - RPD is out of criteria

Where applicable, all soil sample analysis are reported on a dry weight basis unless flagged with a "W"

Note: Calculations are performed before rounding to avoid round-off errors in calculated results

Semivolatile Organic Compounds by GC/MS - MSD

Sample ID: ME10010-001MD
Batch: 59361
Analytical Method: 8270D

Matrix: Aqueous
Prep Method: 3520C
Prep Date: 05/11/2011 1331

Parameter	Sample Amount (ug/L)	Spike Amount (ug/L)	Result (ug/L)	Q	Dil	% Rec	% RPD	% Rec Limit	% RPD Limit	Analysis Date
2-Nitroaniline	ND	80	53		1	66	0.31	48-126	40	05/16/2011 1817
3-Nitroaniline	ND	80	20	+	1	25	45	10-110	40	05/16/2011 1817
4-Nitroaniline	ND	80	37		1	46	15	41-99	40	05/16/2011 1817
Nitrobenzene	ND	40	25		1	62	7.2	44-91	40	05/16/2011 1817
2-Nitrophenol	ND	80	52		1	64	3.7	34-102	40	05/16/2011 1817
4-Nitrophenol	ND	200	130		1	65	3.7	29-122	40	05/16/2011 1817
N-Nitrosodi-n-propylamine	ND	40	24		1	59	6.3	41-96	40	05/16/2011 1817
N-Nitrosodiphenylamine (Diphenylamine)	ND	40	14		1	35	11	10-150	40	05/16/2011 1817
Pentachlorophenol	ND	200	110		1	55	12	32-110	40	05/16/2011 1817
Phenanthrene	ND	40	11	N	1	27	17	49-122	40	05/16/2011 1817
Phenol	ND	40	26		1	66	7.5	33-92	40	05/16/2011 1817
Pyrene	ND	40	2.8	N	1	6.9	14	50-130	40	05/16/2011 1817
2,4,5-Trichlorophenol	ND	40	27		1	67	0.12	46-125	40	05/16/2011 1817
2,4,6-Trichlorophenol	ND	40	27		1	68	2.2	36-123	40	05/16/2011 1817

Surrogate	Q	% Rec	Acceptance Limit
2-Fluorobiphenyl		55	37-129
2-Fluorophenol		64	24-127
Nitrobenzene-d5		61	38-127
Phenol-d5		65	28-128
Terphenyl-d14	N	6.7	10-148
2,4,6-Tribromophenol		69	41-144

PQL = Practical quantitation limit
ND = Not detected at or above the MDL
P = The RPD between two GC columns exceeds 40%
J = Estimated result < PQL and ≥ MDL
N - Recovery is out of criteria
+ - RPD is out of criteria

Where applicable, all soil sample analysis are reported on a dry weight basis unless flagged with a "W"

Note: Calculations are performed before rounding to avoid round-off errors in calculated results

Semivolatile Organic Compounds by GC/MS - MB

Sample ID: MQ59927-001
Batch: 59927
Analytical Method: 8270D

Matrix: Aqueous
Prep Method: 3520C
Prep Date: 05/19/2011 1125

Parameter	Result	Q	Dil	PQL	MDL	Units	Analysis Date
2,4,5-Trichlorophenol	ND		1	1.0	0.18	ug/L	05/24/2011 2347
2,4,6-Trichlorophenol	ND		1	1.0	0.22	ug/L	05/24/2011 2347
2,4-Dichlorophenol	ND		1	1.0	0.15	ug/L	05/24/2011 2347
2,4-Dimethylphenol	ND		1	1.0	0.31	ug/L	05/24/2011 2347
2,4-Dinitrophenol	ND		1	5.0	0.25	ug/L	05/24/2011 2347
2,4-Dinitrotoluene	ND		1	2.0	0.45	ug/L	05/24/2011 2347
2,6-Dinitrotoluene	ND		1	2.0	0.40	ug/L	05/24/2011 2347
2-Chloronaphthalene	ND		1	1.0	0.12	ug/L	05/24/2011 2347
2-Chlorophenol	ND		1	1.0	0.13	ug/L	05/24/2011 2347
2-Methylnaphthalene	ND		1	1.0	0.080	ug/L	05/24/2011 2347
2-Methylphenol	ND		1	1.0	0.17	ug/L	05/24/2011 2347
2-Nitroaniline	ND		1	2.0	0.55	ug/L	05/24/2011 2347
2-Nitrophenol	ND		1	2.0	0.27	ug/L	05/24/2011 2347
3 & 4-Methylphenol	ND		1	2.0	0.57	ug/L	05/24/2011 2347
3,3'-Dichlorobenzidine	ND		1	5.0	0.81	ug/L	05/24/2011 2347
3-Nitroaniline	ND		1	2.0	0.77	ug/L	05/24/2011 2347
4,6-Dinitro-2-methylphenol	ND		1	5.0	1.5	ug/L	05/24/2011 2347
4-Bromophenyl phenyl ether	ND		1	1.0	0.12	ug/L	05/24/2011 2347
4-Chloro-3-methyl phenol	ND		1	1.0	0.22	ug/L	05/24/2011 2347
4-Chloroaniline	ND		1	1.0	0.13	ug/L	05/24/2011 2347
4-Chlorophenyl phenyl ether	ND		1	1.0	0.11	ug/L	05/24/2011 2347
4-Nitroaniline	ND		1	2.0	0.39	ug/L	05/24/2011 2347
4-Nitrophenol	ND		1	5.0	0.64	ug/L	05/24/2011 2347
Acenaphthene	ND		1	1.0	0.090	ug/L	05/24/2011 2347
Acenaphthylene	ND		1	1.0	0.16	ug/L	05/24/2011 2347
Anthracene	ND		1	1.0	0.13	ug/L	05/24/2011 2347
Benzo(a)anthracene	ND		1	1.0	0.15	ug/L	05/24/2011 2347
Benzo(a)pyrene	ND		1	1.0	0.16	ug/L	05/24/2011 2347
Benzo(b)fluoranthene	ND		1	1.0	0.20	ug/L	05/24/2011 2347
Benzo(g,h,i)perylene	ND		1	1.0	0.23	ug/L	05/24/2011 2347
Benzo(k)fluoranthene	ND		1	1.0	0.12	ug/L	05/24/2011 2347
bis(2-Chloroethoxy)methane	ND		1	1.0	0.13	ug/L	05/24/2011 2347
bis(2-Chloroisopropyl)ether	ND		1	1.0	0.080	ug/L	05/24/2011 2347
bis(2-Ethylhexyl)phthalate	ND		1	5.0	1.7	ug/L	05/24/2011 2347
Butyl benzyl phthalate	ND		1	5.0	1.7	ug/L	05/24/2011 2347
Carbazole	ND		1	1.0	0.25	ug/L	05/24/2011 2347
Chrysene	ND		1	1.0	0.12	ug/L	05/24/2011 2347
Di-n-butyl phthalate	ND		1	5.0	1.7	ug/L	05/24/2011 2347
Di-n-octylphthalate	ND		1	5.0	1.7	ug/L	05/24/2011 2347
Dibenzo(a,h)anthracene	ND		1	1.0	0.13	ug/L	05/24/2011 2347
Dibenzofuran	ND		1	1.0	0.16	ug/L	05/24/2011 2347
Diethylphthalate	ND		1	5.0	1.7	ug/L	05/24/2011 2347
Dimethyl phthalate	ND		1	5.0	1.7	ug/L	05/24/2011 2347
Fluoranthene	ND		1	1.0	0.21	ug/L	05/24/2011 2347

PQL = Practical quantitation limit
ND = Not detected at or above the MDL
P = The RPD between two GC columns exceeds 40%
J = Estimated result < PQL and ≥ MDL
N - Recovery is out of criteria
+ - RPD is out of criteria

Where applicable, all soil sample analysis are reported on a dry weight basis unless flagged with a "W"

Note: Calculations are performed before rounding to avoid round-off errors in calculated results

Semivolatile Organic Compounds by GC/MS - MB

Sample ID: MQ59927-001
Batch: 59927
Analytical Method: 8270D

Matrix: Aqueous
Prep Method: 3520C
Prep Date: 05/19/2011 1125

Parameter	Result	Q	Dil	PQL	MDL	Units	Analysis Date
Fluorene	ND		1	1.0	0.10	ug/L	05/24/2011 2347
Hexachlorobenzene	ND		1	1.0	0.21	ug/L	05/24/2011 2347
Hexachlorobutadiene	ND		1	1.0	0.090	ug/L	05/24/2011 2347
Hexachlorocyclopentadiene	ND		1	5.0	0.23	ug/L	05/24/2011 2347
Hexachloroethane	ND		1	1.0	0.11	ug/L	05/24/2011 2347
Indeno(1,2,3-c,d)pyrene	ND		1	1.0	0.23	ug/L	05/24/2011 2347
Isophorone	ND		1	1.0	0.080	ug/L	05/24/2011 2347
N-Nitrosodi-n-propylamine	ND		1	1.0	0.080	ug/L	05/24/2011 2347
N-Nitrosodiphenylamine (Diphenylamine)	ND		1	1.0	0.38	ug/L	05/24/2011 2347
Naphthalene	ND		1	1.0	0.070	ug/L	05/24/2011 2347
Nitrobenzene	ND		1	1.0	0.10	ug/L	05/24/2011 2347
Pentachlorophenol	ND		1	5.0	0.54	ug/L	05/24/2011 2347
Phenanthrene	ND		1	1.0	0.18	ug/L	05/24/2011 2347
Phenol	ND		1	1.0	0.11	ug/L	05/24/2011 2347
Pyrene	ND		1	1.0	0.16	ug/L	05/24/2011 2347

Surrogate	Q	% Rec	Acceptance Limit
2,4,6-Tribromophenol		61	41-144
2-Fluorobiphenyl		74	37-129
2-Fluorophenol		71	24-127
Nitrobenzene-d5		68	38-127
Phenol-d5		73	28-128
Terphenyl-d14		63	10-148

PQL = Practical quantitation limit
ND = Not detected at or above the MDL
P = The RPD between two GC columns exceeds 40%
J = Estimated result < PQL and ≥ MDL
N - Recovery is out of criteria
+ - RPD is out of criteria

Where applicable, all soil sample analysis are reported on a dry weight basis unless flagged with a "W"

Note: Calculations are performed before rounding to avoid round-off errors in calculated results

Semivolatile Organic Compounds by GC/MS - LCS

Sample ID: MQ59927-002
Batch: 59927
Analytical Method: 8270D

Matrix: Aqueous
Prep Method: 3520C
Prep Date: 05/19/2011 1125

Parameter	Spike Amount (ug/L)	Result (ug/L)	Q	Dil	% Rec	% Rec Limit	Analysis Date
2,4,5-Trichlorophenol	20	14		1	68	46-125	05/25/2011 0006
2,4,6-Trichlorophenol	20	13		1	63	36-123	05/25/2011 0006
2,4-Dichlorophenol	20	14		1	69	38-127	05/25/2011 0006
2,4-Dimethylphenol	20	15		1	77	36-110	05/25/2011 0006
2,4-Dinitrophenol	100	68		1	68	33-143	05/25/2011 0006
2,4-Dinitrotoluene	40	29		1	73	55-137	05/25/2011 0006
2,6-Dinitrotoluene	40	28		1	70	53-128	05/25/2011 0006
2-Chloronaphthalene	20	12		1	61	42-132	05/25/2011 0006
2-Chlorophenol	20	13		1	67	40-128	05/25/2011 0006
2-Methylnaphthalene	20	13		1	66	49-122	05/25/2011 0006
2-Methylphenol	20	13		1	66	33-122	05/25/2011 0006
2-Nitroaniline	40	29		1	72	48-126	05/25/2011 0006
2-Nitrophenol	40	27		1	67	44-131	05/25/2011 0006
3 & 4-Methylphenol	40	27		1	68	48-112	05/25/2011 0006
3-Nitroaniline	40	23		1	59	29-109	05/25/2011 0006
4,6-Dinitro-2-methylphenol	100	66		1	66	46-151	05/25/2011 0006
4-Bromophenyl phenyl ether	20	13		1	63	49-123	05/25/2011 0006
4-Chloro-3-methyl phenol	20	15		1	73	48-136	05/25/2011 0006
4-Chloroaniline	20	3.7		1	19	18-73	05/25/2011 0006
4-Chlorophenyl phenyl ether	20	13		1	65	34-124	05/25/2011 0006
4-Nitroaniline	40	28		1	71	42-154	05/25/2011 0006
4-Nitrophenol	100	70		1	70	43-145	05/25/2011 0006
Acenaphthene	20	13		1	67	51-130	05/25/2011 0006
Acenaphthylene	20	15		1	73	46-131	05/25/2011 0006
Anthracene	20	13		1	65	48-122	05/25/2011 0006
Benzo(a)anthracene	20	13		1	66	50-143	05/25/2011 0006
Benzo(a)pyrene	20	13		1	64	55-141	05/25/2011 0006
Benzo(b)fluoranthene	20	12		1	61	48-147	05/25/2011 0006
Benzo(g,h,i)perylene	20	12		1	61	48-139	05/25/2011 0006
Benzo(k)fluoranthene	20	13		1	65	48-148	05/25/2011 0006
bis(2-Chloroethoxy)methane	20	14		1	69	46-130	05/25/2011 0006
bis(2-Chloroisopropyl)ether	20	13		1	66	36-133	05/25/2011 0006
bis(2-Ethylhexyl)phthalate	20	13		1	67	40-141	05/25/2011 0006
Butyl benzyl phthalate	20	14		1	69	52-142	05/25/2011 0006
Carbazole	20	13		1	64	45-101	05/25/2011 0006
Chrysene	20	13		1	67	51-137	05/25/2011 0006
Di-n-butyl phthalate	20	14		1	69	50-134	05/25/2011 0006
Di-n-octylphthalate	20	14		1	68	50-136	05/25/2011 0006
Dibenzo(a,h)anthracene	20	12		1	62	48-139	05/25/2011 0006
Dibenzofuran	20	13		1	64	45-142	05/25/2011 0006
Diethylphthalate	20	14		1	70	48-124	05/25/2011 0006
Dimethyl phthalate	20	13		1	67	43-122	05/25/2011 0006
Fluoranthene	20	13		1	67	50-124	05/25/2011 0006
Fluorene	20	14		1	68	39-122	05/25/2011 0006

PQL = Practical quantitation limit
ND = Not detected at or above the MDL
P = The RPD between two GC columns exceeds 40%
J = Estimated result < PQL and ≥ MDL
N - Recovery is out of criteria
+ - RPD is out of criteria

Where applicable, all soil sample analysis are reported on a dry weight basis unless flagged with a "W"

Note: Calculations are performed before rounding to avoid round-off errors in calculated results

Semivolatile Organic Compounds by GC/MS - LCS

Sample ID: MQ59927-002
Batch: 59927
Analytical Method: 8270D

Matrix: Aqueous
Prep Method: 3520C
Prep Date: 05/19/2011 1125

Parameter	Spike Amount (ug/L)	Result (ug/L)	Q	Dil	% Rec	% Rec Limit	Analysis Date
Hexachlorobenzene	20	12		1	62	46-125	05/25/2011 0006
Hexachlorobutadiene	20	12		1	62	38-121	05/25/2011 0006
Hexachlorocyclopentadiene	100	44		1	44	24-110	05/25/2011 0006
Hexachloroethane	20	13		1	63	32-109	05/25/2011 0006
Indeno(1,2,3-c,d)pyrene	20	12		1	60	49-146	05/25/2011 0006
Isophorone	20	14		1	71	43-118	05/25/2011 0006
N-Nitrosodi-n-propylamine	20	14		1	70	46-135	05/25/2011 0006
N-Nitrosodiphenylamine (Diphenylamine)	20	14		1	71	44-124	05/25/2011 0006
Naphthalene	20	13		1	67	45-118	05/25/2011 0006
Nitrobenzene	20	14		1	70	46-131	05/25/2011 0006
Pentachlorophenol	100	71		1	71	30-137	05/25/2011 0006
Phenanthrene	20	13		1	65	49-122	05/25/2011 0006
Phenol	20	13		1	67	35-118	05/25/2011 0006
Pyrene	20	13		1	66	50-130	05/25/2011 0006

Surrogate	Q	% Rec	Acceptance Limit
2,4,6-Tribromophenol		68	41-144
2-Fluorobiphenyl		67	37-129
2-Fluorophenol		71	24-127
Nitrobenzene-d5		75	38-127
Phenol-d5		75	28-128
Terphenyl-d14		59	10-148

PQL = Practical quantitation limit
ND = Not detected at or above the MDL
P = The RPD between two GC columns exceeds 40%
J = Estimated result < PQL and ≥ MDL
N - Recovery is out of criteria
+ - RPD is out of criteria

Where applicable, all soil sample analysis are reported on a dry weight basis unless flagged with a "W"

Note: Calculations are performed before rounding to avoid round-off errors in calculated results

Semivolatile Organic Compounds by GC/MS - LCSD

Sample ID: MQ59927-003
Batch: 59927
Analytical Method: 8270D

Matrix: Aqueous
Prep Method: 3520C
Prep Date: 05/19/2011 1125

Parameter	Spike Amount (ug/L)	Result (ug/L)	Q	Dil	% Rec	% RPD	% Rec Limit	% RPD Limit	Analysis Date
2,4,5-Trichlorophenol	20	15		1	74	9.2	46-125	40	05/25/2011 0025
2,4,6-Trichlorophenol	20	15		1	73	15	36-123	40	05/25/2011 0025
2,4-Dichlorophenol	20	15		1	77	11	38-127	40	05/25/2011 0025
2,4-Dimethylphenol	20	17		1	87	13	36-110	40	05/25/2011 0025
2,4-Dinitrophenol	100	79		1	79	15	33-143	40	05/25/2011 0025
2,4-Dinitrotoluene	40	33		1	81	11	55-137	40	05/25/2011 0025
2,6-Dinitrotoluene	40	32		1	80	13	53-128	40	05/25/2011 0025
2-Chloronaphthalene	20	14		1	68	11	42-132	40	05/25/2011 0025
2-Chlorophenol	20	15		1	76	12	40-128	40	05/25/2011 0025
2-Methylnaphthalene	20	15		1	73	10	49-122	40	05/25/2011 0025
2-Methylphenol	20	14		1	72	9.4	33-122	40	05/25/2011 0025
2-Nitroaniline	40	33		1	82	12	48-126	40	05/25/2011 0025
2-Nitrophenol	40	31		1	79	16	44-131	40	05/25/2011 0025
3 & 4-Methylphenol	40	30		1	75	9.4	48-112	40	05/25/2011 0025
3-Nitroaniline	40	27		1	67	14	29-109	40	05/25/2011 0025
4,6-Dinitro-2-methylphenol	100	76		1	76	14	46-151	40	05/25/2011 0025
4-Bromophenyl phenyl ether	20	14		1	72	13	49-123	40	05/25/2011 0025
4-Chloro-3-methyl phenol	20	16		1	80	8.2	48-136	40	05/25/2011 0025
4-Chloroaniline	20	3.3	N	1	17	11	18-73	40	05/25/2011 0025
4-Chlorophenyl phenyl ether	20	15		1	73	11	34-124	40	05/25/2011 0025
4-Nitroaniline	40	32		1	80	13	42-154	40	05/25/2011 0025
4-Nitrophenol	100	77		1	77	9.7	43-145	40	05/25/2011 0025
Acenaphthene	20	15		1	75	10	51-130	40	05/25/2011 0025
Acenaphthylene	20	16		1	81	11	46-131	40	05/25/2011 0025
Anthracene	20	15		1	73	12	48-122	40	05/25/2011 0025
Benzo(a)anthracene	20	15		1	73	9.8	50-143	40	05/25/2011 0025
Benzo(a)pyrene	20	14		1	72	11	55-141	40	05/25/2011 0025
Benzo(b)fluoranthene	20	14		1	72	17	48-147	40	05/25/2011 0025
Benzo(g,h,i)perylene	20	14		1	68	10	48-139	40	05/25/2011 0025
Benzo(k)fluoranthene	20	14		1	68	5.0	48-148	40	05/25/2011 0025
bis(2-Chloroethoxy)methane	20	15		1	77	11	46-130	40	05/25/2011 0025
bis(2-Chloroisopropyl)ether	20	14		1	72	9.2	36-133	40	05/25/2011 0025
bis(2-Ethylhexyl)phthalate	20	15		1	75	11	40-141	40	05/25/2011 0025
Butyl benzyl phthalate	20	15		1	77	11	52-142	40	05/25/2011 0025
Carbazole	20	14		1	72	12	45-101	40	05/25/2011 0025
Chrysene	20	15		1	75	10	51-137	40	05/25/2011 0025
Di-n-butyl phthalate	20	15		1	76	11	50-134	40	05/25/2011 0025
Di-n-octylphthalate	20	15		1	77	13	50-136	40	05/25/2011 0025
Dibenzo(a,h)anthracene	20	14		1	71	12	48-139	40	05/25/2011 0025
Dibenzofuran	20	14		1	71	11	45-142	40	05/25/2011 0025
Diethylphthalate	20	15		1	76	8.6	48-124	40	05/25/2011 0025
Dimethyl phthalate	20	15		1	74	10	43-122	40	05/25/2011 0025
Fluoranthene	20	15		1	75	11	50-124	40	05/25/2011 0025
Fluorene	20	15		1	76	11	39-122	40	05/25/2011 0025

PQL = Practical quantitation limit
ND = Not detected at or above the MDL
P = The RPD between two GC columns exceeds 40%
J = Estimated result < PQL and ≥ MDL
N - Recovery is out of criteria
+ - RPD is out of criteria

Where applicable, all soil sample analysis are reported on a dry weight basis unless flagged with a "W"

Note: Calculations are performed before rounding to avoid round-off errors in calculated results

Semivolatile Organic Compounds by GC/MS - LCSD

Sample ID: MQ59927-003
Batch: 59927
Analytical Method: 8270D

Matrix: Aqueous
Prep Method: 3520C
Prep Date: 05/19/2011 1125

Parameter	Spike Amount (ug/L)	Result (ug/L)	Q	Dil	% Rec	% RPD	% Rec Limit	% RPD Limit	Analysis Date
Hexachlorobenzene	20	14		1	72	14	46-125	40	05/25/2011 0025
Hexachlorobutadiene	20	14		1	71	14	38-121	40	05/25/2011 0025
Hexachlorocyclopentadiene	100	54		1	54	19	24-110	40	05/25/2011 0025
Hexachloroethane	20	14		1	71	11	32-109	40	05/25/2011 0025
Indeno(1,2,3-c,d)pyrene	20	14		1	68	12	49-146	40	05/25/2011 0025
Isophorone	20	16		1	79	11	43-118	40	05/25/2011 0025
N-Nitrosodi-n-propylamine	20	15		1	77	9.4	46-135	40	05/25/2011 0025
N-Nitrosodiphenylamine (Diphenylamine)	20	16		1	80	12	44-124	40	05/25/2011 0025
Naphthalene	20	15		1	75	11	45-118	40	05/25/2011 0025
Nitrobenzene	20	16		1	78	10	46-131	40	05/25/2011 0025
Pentachlorophenol	100	81		1	81	13	30-137	40	05/25/2011 0025
Phenanthrene	20	15		1	74	12	49-122	40	05/25/2011 0025
Phenol	20	15		1	74	10	35-118	40	05/25/2011 0025
Pyrene	20	15		1	74	12	50-130	40	05/25/2011 0025

Surrogate	Q	% Rec	Acceptance Limit
2,4,6-Tribromophenol		73	41-144
2-Fluorobiphenyl		71	37-129
2-Fluorophenol		74	24-127
Nitrobenzene-d5		78	38-127
Phenol-d5		77	28-128
Terphenyl-d14		61	10-148

PQL = Practical quantitation limit
ND = Not detected at or above the MDL
P = The RPD between two GC columns exceeds 40%
J = Estimated result < PQL and ≥ MDL
N - Recovery is out of criteria
+ - RPD is out of criteria

Where applicable, all soil sample analysis are reported on a dry weight basis unless flagged with a "W"

Note: Calculations are performed before rounding to avoid round-off errors in calculated results

RCRA Metals - MB

Sample ID: MQ59321-001
Batch: 59321
Analytical Method: 6010C

Matrix: Aqueous
Prep Method: 3005A
Prep Date: 05/10/2011 1702

Parameter	Result	Q	Dil	PQL	MDL	Units	Analysis Date
Arsenic	0.0040	J	1	0.010	0.0040	mg/L	05/11/2011 1730
Barium	ND		1	0.025	0.0075	mg/L	05/11/2011 1730
Cadmium	ND		1	0.0020	0.00060	mg/L	05/11/2011 1730
Chromium	ND		1	0.0050	0.0021	mg/L	05/11/2011 1730
Lead	ND		1	0.010	0.0019	mg/L	05/11/2011 1730
Selenium	0.0052	J	1	0.010	0.0026	mg/L	05/11/2011 1730
Silver	ND		1	0.0050	0.00040	mg/L	05/11/2011 1730

PQL = Practical quantitation limit
ND = Not detected at or above the MDL
P = The RPD between two GC columns exceeds 40%
J = Estimated result < PQL and ≥ MDL
N - Recovery is out of criteria
+ - RPD is out of criteria

Where applicable, all soil sample analysis are reported on a dry weight basis unless flagged with a "W"

Note: Calculations are performed before rounding to avoid round-off errors in calculated results

RCRA Metals - LCS

Sample ID: MQ59321-002
Batch: 59321
Analytical Method: 6010C

Matrix: Aqueous
Prep Method: 3005A
Prep Date: 05/10/2011 1702

Parameter	Spike Amount (mg/L)	Result (mg/L)	Q	Dil	% Rec	% Rec Limit	Analysis Date
Arsenic	0.40	0.40		1	100	80-120	05/11/2011 1737
Barium	2.0	1.8		1	90	80-120	05/11/2011 1737
Cadmium	0.40	0.44		1	109	80-120	05/11/2011 1737
Chromium	2.0	2.0		1	101	80-120	05/11/2011 1737
Lead	0.40	0.43		1	107	80-120	05/11/2011 1737
Selenium	0.40	0.41		1	102	80-120	05/11/2011 1737
Silver	0.40	0.37		1	91	80-120	05/11/2011 1737

PQL = Practical quantitation limit
ND = Not detected at or above the MDL
P = The RPD between two GC columns exceeds 40%
J = Estimated result < PQL and ≥ MDL
N - Recovery is out of criteria
+ - RPD is out of criteria

Where applicable, all soil sample analysis are reported on a dry weight basis unless flagged with a "W"

Note: Calculations are performed before rounding to avoid round-off errors in calculated results

RCRA Metals - LCSD

Sample ID: MQ59321-003
Batch: 59321
Analytical Method: 6010C

Matrix: Aqueous
Prep Method: 3005A
Prep Date: 05/10/2011 1702

Parameter	Spike Amount (mg/L)	Result (mg/L)	Q	Dil	% Rec	% RPD	% Rec Limit	% RPD Limit	Analysis Date
Arsenic	0.40	0.41		1	103	2.6	80-120	20	05/11/2011 1743
Barium	2.0	1.9		1	94	4.6	80-120	20	05/11/2011 1743
Cadmium	0.40	0.44		1	111	1.1	80-120	20	05/11/2011 1743
Chromium	2.0	2.1		1	103	1.6	80-120	20	05/11/2011 1743
Lead	0.40	0.44		1	109	2.3	80-120	20	05/11/2011 1743
Selenium	0.40	0.42		1	104	2.5	80-120	20	05/11/2011 1743
Silver	0.40	0.38		1	95	3.4	80-120	20	05/11/2011 1743

PQL = Practical quantitation limit
ND = Not detected at or above the MDL
P = The RPD between two GC columns exceeds 40%
J = Estimated result < PQL and ≥ MDL
N - Recovery is out of criteria
+ - RPD is out of criteria

Where applicable, all soil sample analysis are reported on a dry weight basis unless flagged with a "W"

Note: Calculations are performed before rounding to avoid round-off errors in calculated results

Dissolved RCRA Metals - MB

Sample ID: MQ59321-001
Batch: 59321
Analytical Method: 6010C

Matrix: Aqueous
Prep Method: 3005A
Prep Date: 05/10/2011 1702

Parameter	Result	Q	Dil	PQL	MDL	Units	Analysis Date
Dissolved Arsenic	0.0040	J	1	0.010	0.0040	mg/L	05/11/2011 1730
Dissolved Barium	ND		1	0.025	0.0075	mg/L	05/11/2011 1730
Dissolved Cadmium	ND		1	0.0020	0.00060	mg/L	05/11/2011 1730
Dissolved Chromium	ND		1	0.0050	0.0021	mg/L	05/11/2011 1730
Dissolved Lead	ND		1	0.010	0.0019	mg/L	05/11/2011 1730
Dissolved Selenium	0.0052	J	1	0.010	0.0026	mg/L	05/11/2011 1730
Dissolved Silver	ND		1	0.0050	0.00040	mg/L	05/11/2011 1730

PQL = Practical quantitation limit
ND = Not detected at or above the MDL
P = The RPD between two GC columns exceeds 40%
J = Estimated result < PQL and ≥ MDL
N - Recovery is out of criteria
+ - RPD is out of criteria

Where applicable, all soil sample analysis are reported on a dry weight basis unless flagged with a "W"

Note: Calculations are performed before rounding to avoid round-off errors in calculated results

Dissolved RCRA Metals - LCS

Sample ID: MQ59321-002
Batch: 59321
Analytical Method: 6010C

Matrix: Aqueous
Prep Method: 3005A
Prep Date: 05/10/2011 1702

Parameter	Spike Amount (mg/L)	Result (mg/L)	Q	Dil	% Rec	% Rec Limit	Analysis Date
Dissolved Arsenic	0.40	0.40		1	100	80-120	05/11/2011 1737
Dissolved Barium	2.0	1.8		1	90	80-120	05/11/2011 1737
Dissolved Cadmium	0.40	0.44		1	109	80-120	05/11/2011 1737
Dissolved Chromium	2.0	2.0		1	101	80-120	05/11/2011 1737
Dissolved Lead	0.40	0.43		1	107	80-120	05/11/2011 1737
Dissolved Selenium	0.40	0.41		1	102	80-120	05/11/2011 1737
Dissolved Silver	0.40	0.37		1	91	80-120	05/11/2011 1737

PQL = Practical quantitation limit
ND = Not detected at or above the MDL
P = The RPD between two GC columns exceeds 40%
J = Estimated result < PQL and ≥ MDL
N - Recovery is out of criteria
+ - RPD is out of criteria

Where applicable, all soil sample analysis are reported on a dry weight basis unless flagged with a "W"

Note: Calculations are performed before rounding to avoid round-off errors in calculated results

Dissolved RCRA Metals - LCSD

Sample ID: MQ59321-003
Batch: 59321
Analytical Method: 6010C

Matrix: Aqueous
Prep Method: 3005A
Prep Date: 05/10/2011 1702

Parameter	Spike Amount (mg/L)	Result (mg/L)	Q	Dil	% Rec	% RPD	% Rec Limit	% RPD Limit	Analysis Date
Dissolved Arsenic	0.40	0.41		1	103	2.6	80-120	20	05/11/2011 1743
Dissolved Barium	2.0	1.9		1	94	4.6	80-120	20	05/11/2011 1743
Dissolved Cadmium	0.40	0.44		1	111	1.1	80-120	20	05/11/2011 1743
Dissolved Chromium	2.0	2.1		1	103	1.6	80-120	20	05/11/2011 1743
Dissolved Lead	0.40	0.44		1	109	2.3	80-120	20	05/11/2011 1743
Dissolved Selenium	0.40	0.42		1	104	2.5	80-120	20	05/11/2011 1743
Dissolved Silver	0.40	0.38		1	95	3.4	80-120	20	05/11/2011 1743

PQL = Practical quantitation limit
ND = Not detected at or above the MDL
P = The RPD between two GC columns exceeds 40%
J = Estimated result < PQL and ≥ MDL
N - Recovery is out of criteria
+ - RPD is out of criteria

Where applicable, all soil sample analysis are reported on a dry weight basis unless flagged with a "W"

Note: Calculations are performed before rounding to avoid round-off errors in calculated results

RCRA Metals - MB

Sample ID: MQ59491-001
Batch: 59491
Analytical Method: 7470A

Matrix: Aqueous
Prep Method: 7470A
Prep Date: 05/12/2011 1630

Parameter	Result	Q	Dil	PQL	MDL	Units	Analysis Date
Mercury	ND		1	0.00010	0.000053	mg/L	05/13/2011 0851

PQL = Practical quantitation limit
ND = Not detected at or above the MDL
P = The RPD between two GC columns exceeds 40%
J = Estimated result < PQL and ≥ MDL
N - Recovery is out of criteria
+ - RPD is out of criteria

Where applicable, all soil sample analysis are reported on a dry weight basis unless flagged with a "W"

Note: Calculations are performed before rounding to avoid round-off errors in calculated results

RCRA Metals - LCS

Sample ID: MQ59491-002
Batch: 59491
Analytical Method: 7470A

Matrix: Aqueous
Prep Method: 7470A
Prep Date: 05/12/2011 1630

Parameter	Spike Amount (mg/L)	Result (mg/L)	Q	Dil	% Rec	% Rec Limit	Analysis Date
Mercury	0.0020	0.0019		1	96	85-115	05/13/2011 0853

PQL = Practical quantitation limit
ND = Not detected at or above the MDL
P = The RPD between two GC columns exceeds 40%
J = Estimated result < PQL and ≥ MDL
N - Recovery is out of criteria
+ - RPD is out of criteria

Where applicable, all soil sample analysis are reported on a dry weight basis unless flagged with a "W"

Note: Calculations are performed before rounding to avoid round-off errors in calculated results

RCRA Metals - LCSD

Sample ID: MQ59491-003
Batch: 59491
Analytical Method: 7470A

Matrix: Aqueous
Prep Method: 7470A
Prep Date: 05/12/2011 1630

Parameter	Spike Amount (mg/L)	Result (mg/L)	Q	Dil	% Rec	% RPD	% Rec Limit	% RPD Limit	Analysis Date
Mercury	0.0020	0.0019		1	93	3.2	85-115	20	05/13/2011 0857

PQL = Practical quantitation limit
ND = Not detected at or above the MDL
P = The RPD between two GC columns exceeds 40%
J = Estimated result < PQL and ≥ MDL
N - Recovery is out of criteria
+ - RPD is out of criteria

Where applicable, all soil sample analysis are reported on a dry weight basis unless flagged with a "W"

Note: Calculations are performed before rounding to avoid round-off errors in calculated results

Dissolved RCRA Metals - MB

Sample ID: MQ59491-001
Batch: 59491
Analytical Method: 7470A

Matrix: Aqueous
Prep Method: 7470A
Prep Date: 05/12/2011 1630

Parameter	Result	Q	Dil	PQL	MDL	Units	Analysis Date
Dissolved Mercury	ND		1	0.00010	0.000053	mg/L	05/13/2011 0851

PQL = Practical quantitation limit
ND = Not detected at or above the MDL
P = The RPD between two GC columns exceeds 40%
J = Estimated result < PQL and ≥ MDL
N - Recovery is out of criteria
+ - RPD is out of criteria

Where applicable, all soil sample analysis are reported on a dry weight basis unless flagged with a "W"

Note: Calculations are performed before rounding to avoid round-off errors in calculated results

Dissolved RCRA Metals - LCS

Sample ID: MQ59491-002
Batch: 59491
Analytical Method: 7470A

Matrix: Aqueous
Prep Method: 7470A
Prep Date: 05/12/2011 1630

Parameter	Spike Amount (mg/L)	Result (mg/L)	Q	Dil	% Rec	% Rec Limit	Analysis Date
Dissolved Mercury	0.0020	0.0019		1	96	85-115	05/13/2011 0853

PQL = Practical quantitation limit
ND = Not detected at or above the MDL
P = The RPD between two GC columns exceeds 40%
J = Estimated result < PQL and ≥ MDL
N - Recovery is out of criteria
+ - RPD is out of criteria

Where applicable, all soil sample analysis are reported on a dry weight basis unless flagged with a "W"

Note: Calculations are performed before rounding to avoid round-off errors in calculated results

Dissolved RCRA Metals - LCSD

Sample ID: MQ59491-003
Batch: 59491
Analytical Method: 7470A

Matrix: Aqueous
Prep Method: 7470A
Prep Date: 05/12/2011 1630

Parameter	Spike Amount (mg/L)	Result (mg/L)	Q	Dil	% Rec	% RPD	% Rec Limit	% RPD Limit	Analysis Date
Dissolved Mercury	0.0020	0.0019		1	93	3.2	85-115	20	05/13/2011 0857

PQL = Practical quantitation limit
ND = Not detected at or above the MDL
P = The RPD between two GC columns exceeds 40%
J = Estimated result < PQL and ≥ MDL
N - Recovery is out of criteria
+ - RPD is out of criteria

Where applicable, all soil sample analysis are reported on a dry weight basis unless flagged with a "W"

Note: Calculations are performed before rounding to avoid round-off errors in calculated results

Dissolved RCRA Metals - MS

Sample ID: ME10010-006MS
Batch: 59491
Analytical Method: 7470A

Matrix: Aqueous
Prep Method: 7470A
Prep Date: 05/12/2011 1630

Parameter	Sample Amount (mg/L)	Spike Amount (mg/L)	Result (mg/L)	Q	Dil	% Rec	% Rec Limit	Analysis Date
Dissolved Mercury	ND	0.0020	0.0019		1	97	85-115	05/13/2011 0946

PQL = Practical quantitation limit
ND = Not detected at or above the MDL
P = The RPD between two GC columns exceeds 40%
J = Estimated result < PQL and ≥ MDL
N - Recovery is out of criteria
+ - RPD is out of criteria

Where applicable, all soil sample analysis are reported on a dry weight basis unless flagged with a "W"

Note: Calculations are performed before rounding to avoid round-off errors in calculated results

Dissolved RCRA Metals - MSD

Sample ID: ME10010-006MD
Batch: 59491
Analytical Method: 7470A

Matrix: Aqueous
Prep Method: 7470A
Prep Date: 05/12/2011 1630

Parameter	Sample Amount (mg/L)	Spike Amount (mg/L)	Result (mg/L)	Q	Dil	% Rec	% RPD	% Rec Limit	% RPD Limit	Analysis Date
Dissolved Mercury	ND	0.0020	0.0019		1	95	2.6	85-115	20	05/13/2011 0949

PQL = Practical quantitation limit
ND = Not detected at or above the MDL
P = The RPD between two GC columns exceeds 40%
J = Estimated result < PQL and ≥ MDL
N - Recovery is out of criteria
+ - RPD is out of criteria

Where applicable, all soil sample analysis are reported on a dry weight basis unless flagged with a "W"

Note: Calculations are performed before rounding to avoid round-off errors in calculated results

Dissolved RCRA Metals - MS

Sample ID: ME10010-007MS
Batch: 59491
Analytical Method: 7470A

Matrix: Aqueous
Prep Method: 7470A
Prep Date: 05/12/2011 1630

Parameter	Sample Amount (mg/L)	Spike Amount (mg/L)	Result (mg/L)	Q	Dil	% Rec	% Rec Limit	Analysis Date
Dissolved Mercury	ND	0.0020	0.0019		1	94	85-115	05/13/2011 1044

PQL = Practical quantitation limit
ND = Not detected at or above the MDL
P = The RPD between two GC columns exceeds 40%
J = Estimated result < PQL and ≥ MDL
N - Recovery is out of criteria
+ - RPD is out of criteria

Where applicable, all soil sample analysis are reported on a dry weight basis unless flagged with a "W"

Note: Calculations are performed before rounding to avoid round-off errors in calculated results

ME10010

ARCADIS
Infrastructure, environment, buildings

ID#:

CHAIN OF CUSTODY & LABORATORY ANALYSIS REQUEST FORM

Page 1 of 1

Lab Work Order #

Send Results to:

Contact & Company Name: ARCADIS SHELLEY GIBBONS/	Telephone: 919.854.1282
Address: #300 801 CORPORATE CENTER DR	Fax: 919.854.5448
City: RALEIGH State: NC Zip: 27607	E-mail Address: ARCADIS-US.COM SHELLEY.GIBBONS@
Project Name/Location (City, State): FORT STEWART (FST-39)	Project #: GP09HAFS.F39A.DG0F1
Sampler's Printed Name: JOHN HANNA	Sampler's Signature: John V. Hanna

Preservative	B	E	C	C
Filtered (✓)	—	—	✓	—
# of Containers	3	2	1	1
Container Information	1	2	4	4

Keys

Preservation Key:
A. H_2SO_4
B. HCL
C. HNO_3
D. NaOH
E. None
F. Other: _____
G. Other: _____
H. Other: _____

Container Information Key:
1. 40 ml Vial
2. 1 L Amber
3. 250 ml Plastic
4. 500 ml Plastic
5. Encore
6. 2 oz. Glass
7. 4 oz. Glass
8. 8 oz. Glass
9. Other: _____
10. Other: _____

Matrix Key:
SO - Soil, SE - Sediment, NL - NAPL/Oil, W - Water, SL - Sludge, SW - Sample Wipe, T - Tissue, A - Air, Other: _____

PARAMETER ANALYSIS & METHOD

Sample ID	Collection Date	Collection Time	Type (✓) Comp	Type (✓) Grab	Matrix	VOCs	SVOCs	RCRA METALS (DISSOLVED)	RCRA METALS (TOTAL)				REMARKS
G4MW-048 (050611)	5.6.11	1900		✓	W	3	2	1	1				* ONE WEEK TAT
G4MW-049 (050411)	5.4.11	2030		✓	W	3	2	1	1				* DISSOLVED METALS WERE
G4MW-050 (050611)	5.6.11	1415		✓	W	3	2	1	1				FIELD FILTERED
G4MW-051 (050611)	5.6.11	1500		✓	W	3	2	1	1				*PLEASE RUN TRIP BLANK
G4MW-052 (050611)	5.6.11	1800		✓	W	3	2	1	1				AND COPY ANALYSIS TO
G4MW-053 (050611)	5.6.11	1615		✓	W	3	2	1	1				THE FOLLOWING JH ~~THREE~~ 4 REPORTS:
G4MW-054 (050611)	5.6.11	1030		✓	W	3	2	1	1				FST-26, FST-39, AND
TRIP BLANK #1 (050611)													FST-39 IDW, AND FST-26
													IDW THANK YOU,
													JH

Special Instructions/Comments:

☐ Special QA/QC Instructions(✓):

T = 2-3
T = 3.0, 3-6

Laboratory Information and Receipt		Relinquished By	Received By	Relinquished By	Laboratory Received By
Lab Name: SHEALY ENV. SERVICES	Cooler Custody Seal (✓) ☐ Intact ☐ Not Intact	Printed Name: JOHN HANNA	Printed Name:	Printed Name: Courier	Printed Name: Eleanor Cuaresma
☐ Cooler packed with ice (✓)		Signature: John Hanna	Signature:	Signature:	Signature: [signature]
Specify Turnaround Requirements:	Sample Receipt:	Firm: ARCADIS	Firm/Courier: FEDEX	Firm/Courier: FEDEX	Firm: Shealy Envl
Shipping Tracking #:	Condition/Cooler Temp: _____	Date/Time: 5.9.2011 / 0830	Date/Time:	Date/Time: 5-10-11 0900	Date/Time: 5-10-11 0900

20738626 CofC AR Form 01.12.2007

Distribution: WHITE – Laboratory returns with results YELLOW – Lab copy PINK – Retained by ARCADIS

Shealy Environmental Services, Inc.
Document Number: F-AD-016
Revision Number: 8

Replaces Date: 02/23/11
Effective Date: 05/06/11

Sample Receipt Checklist (SRC)

Client: Arcadis Cooler Inspected by/date: tca 5/10/11 Lot #: ME 10010

Means of receipt: ☐ SESI ☐ Client ☐ UPS ☑ FedEx ☐ Airborne Exp ☐ Other

Yes ☑	No ☐		1. Were custody seals present on the cooler?
Yes ☑	No ☐		2. If custody seals were present, were they intact and unbroken?

Cooler ID/temperature upon receipt 2 - 3 °C 3 - 6 °C / °C / °C
3 - 0 °C / °C / °C / °C

Method: ☐ Temperature Blank ☑ Against Bottles
Method of coolant: ☑ Wet Ice ☐ Blue Ice ☐ Dry Ice ☐ None

If response is No (or Yes for 14, 15, 16), an explanation/resolution must be provided.

Yes ☐	No ☐	NA ☑	3. If temperature of any cooler exceeded 6.0°C, was Project Manager notified? PM notified by SRC, phone, note (circle one), other:_____. (For coolers received via commercial courier, PMs are to be notified immediately.
Yes ☑	No ☐	NA ☐	4. Is the commercial courier's packing slip attached to this form?
Yes ☑	No ☐		5. Were proper custody procedures (relinquished/received) followed?
Yes ☑	No ☐	NA ☐	5a Were samples relinquished by client to commercial courier?
Yes ☑	No ☐		6. Were sample IDs listed?
Yes ☑	No ☐		7. Was collection date & time listed?
Yes ☑	No ☐		8. Were tests to be performed listed on the COC?
Yes ☑	No ☐		9. Did all samples arrive in the proper containers for each test?
Yes ☑	No ☐		10. Did all container label information (ID, date, time) agree with COC?
Yes ☐	No ☑		11. Did all containers arrive in good condition (unbroken, lids on, etc.)?
Yes ☑	No ☐		12. Was adequate sample volume available?
Yes ☐	No ☑		13. Were all samples received within ½ the holding time or 48 hours, whichever comes first?
Yes ☐	No ☑		14. Were any samples containers missing?
Yes ☐	No ☑		15. Were there any excess samples not listed on COC?
Yes ☑	No ☐	NA ☐	16. Were bubbles present >"pea-size" (¼"or 6mm in diameter) in any VOA vials?
Yes ☑	No ☐	NA ☐	17. Were all metals/O&G/HEM/nutrient samples received at a pH of <2?
Yes ☐	No ☐	NA ☑	18. Were all cyanide and/or sulfide samples received at a pH >12?
Yes ☐	No ☐	NA ☑	19. Were all applicable NH3/TKN/cyanide/phenol/BNA/pest/PCB/herb (<0.2mg/L)samples free of residual chlorine?
Yes ☐	No ☐	NA ☑	20. Were collection temperatures documented on the COC for NC samples?

Sample Preservation (Must be completed for any sample(s) incorrectly preserved or with headspace.)

Sample(s)_____were received incorrectly preserved and were adjusted accordingly in sample receiving with _____(H_2SO_4,HNO_3,HCl,NaOH) with the SR # (number)

Sample(s) -005 (2) were received with bubbles >6 mm in diameter.

Sample(s)_____were received with TRC >0.2 mg/L for NH3/TKN/cyanide/BNA/pest/PCB/herb.

Corrective Action taken, if necessary:

Was client notified: Yes ☐ No ☐ Did client respond: Yes ☐ No ☐

SESI employee:_____ Date of response:_____

Comments: -001 1 VOA vial recd broken > tca 5/10/11
-005 2 VOA vials recd broken >

ARCADIS MALCOLM PIRNIE

Appendix F

MIP Response Logs and Slug Test Results

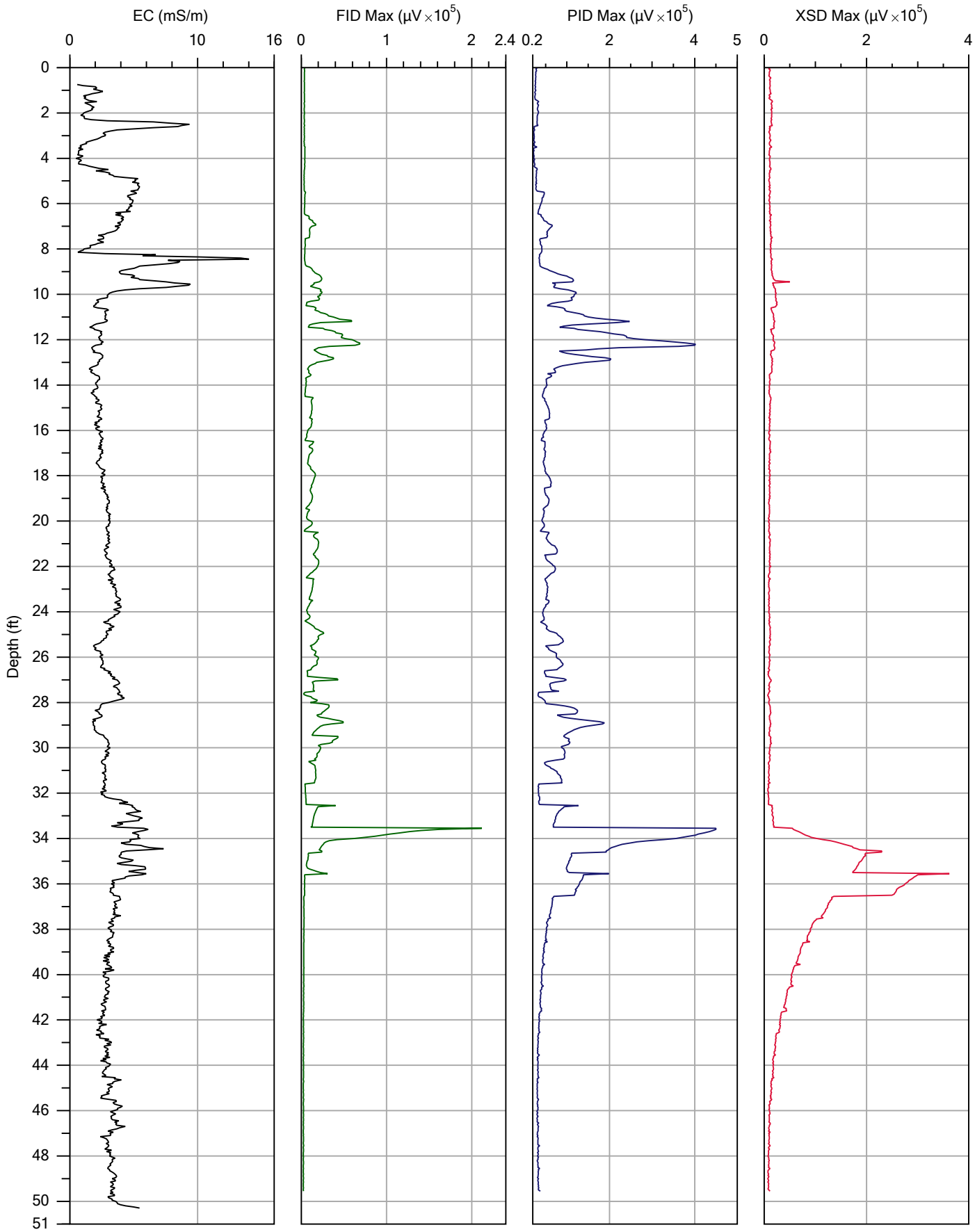

			File: F39MIP-B6.MIP
Company: S2C2 INC.	Operator: TRM		Date: 10/28/2010
Project ID: Ft Stewart	Client: Arcadas		Location:

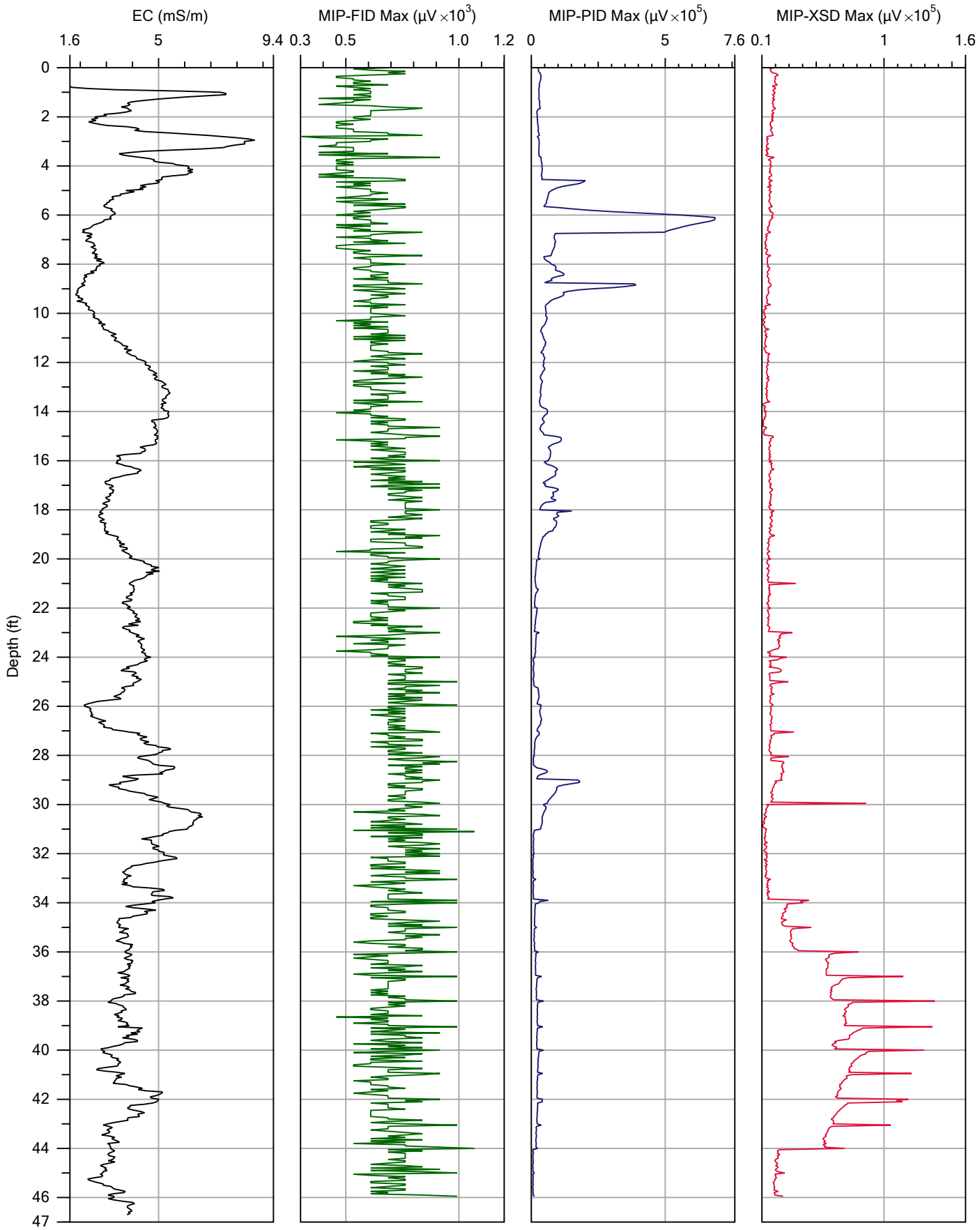

Company: S2C2	Operator: TRM	File: F39MIP-A1.MIP.TXT
Project ID: Fort Stewart	Client: Arcadis	Date:
		Location:

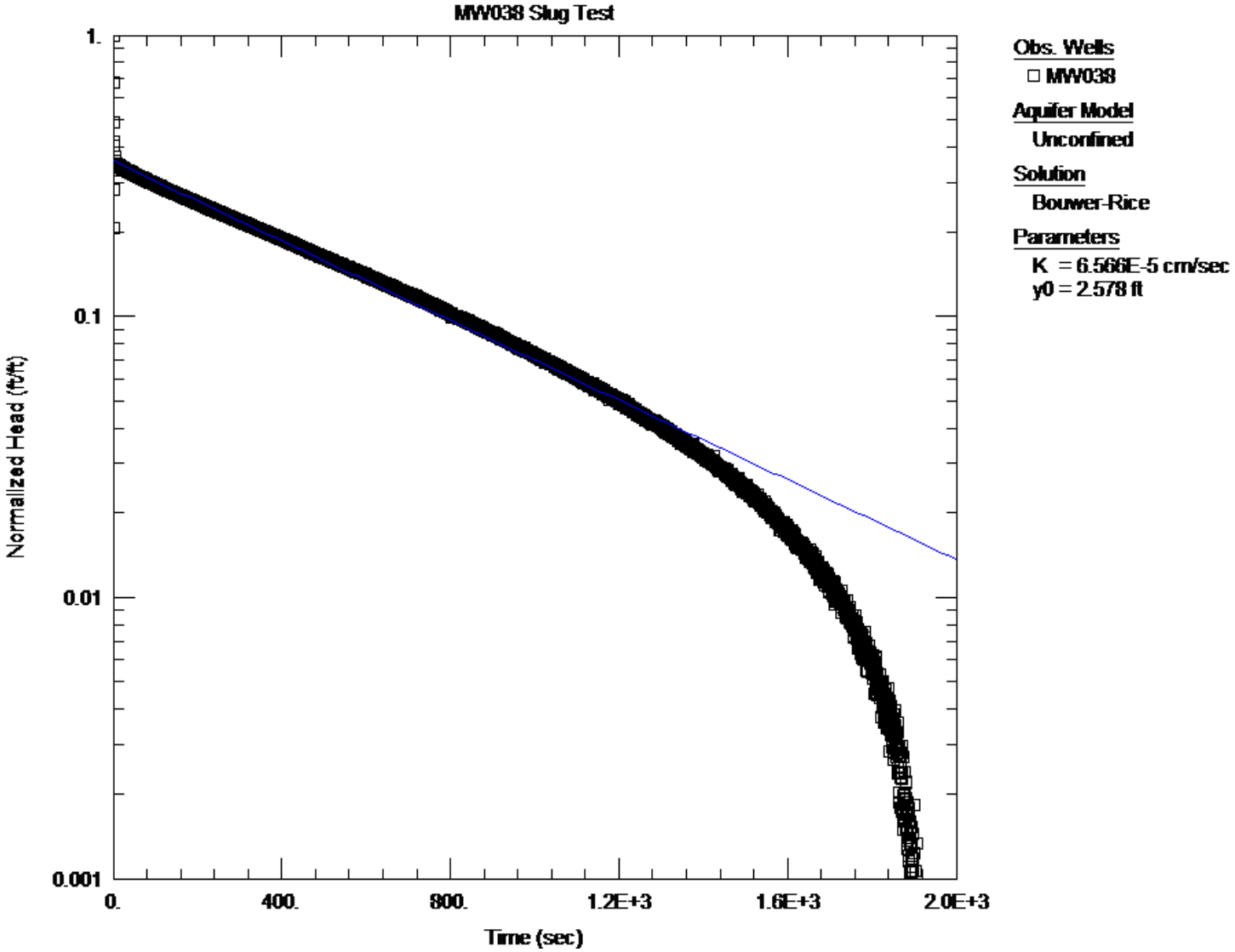
MW038 Slug Test
Normalized Head (ft/ft)
1.
0.1
0.01
0.001
0.
400.
800.
1.2E+3
1.6E+3
2.0E+3
Time (sec)
Obs. Wells
MW038
Aquifer Model
Unconfined
Solution
Bouwer-Rice
Parameters
K = 6.566E-5 cm/sec
y0 = 2.578 ft

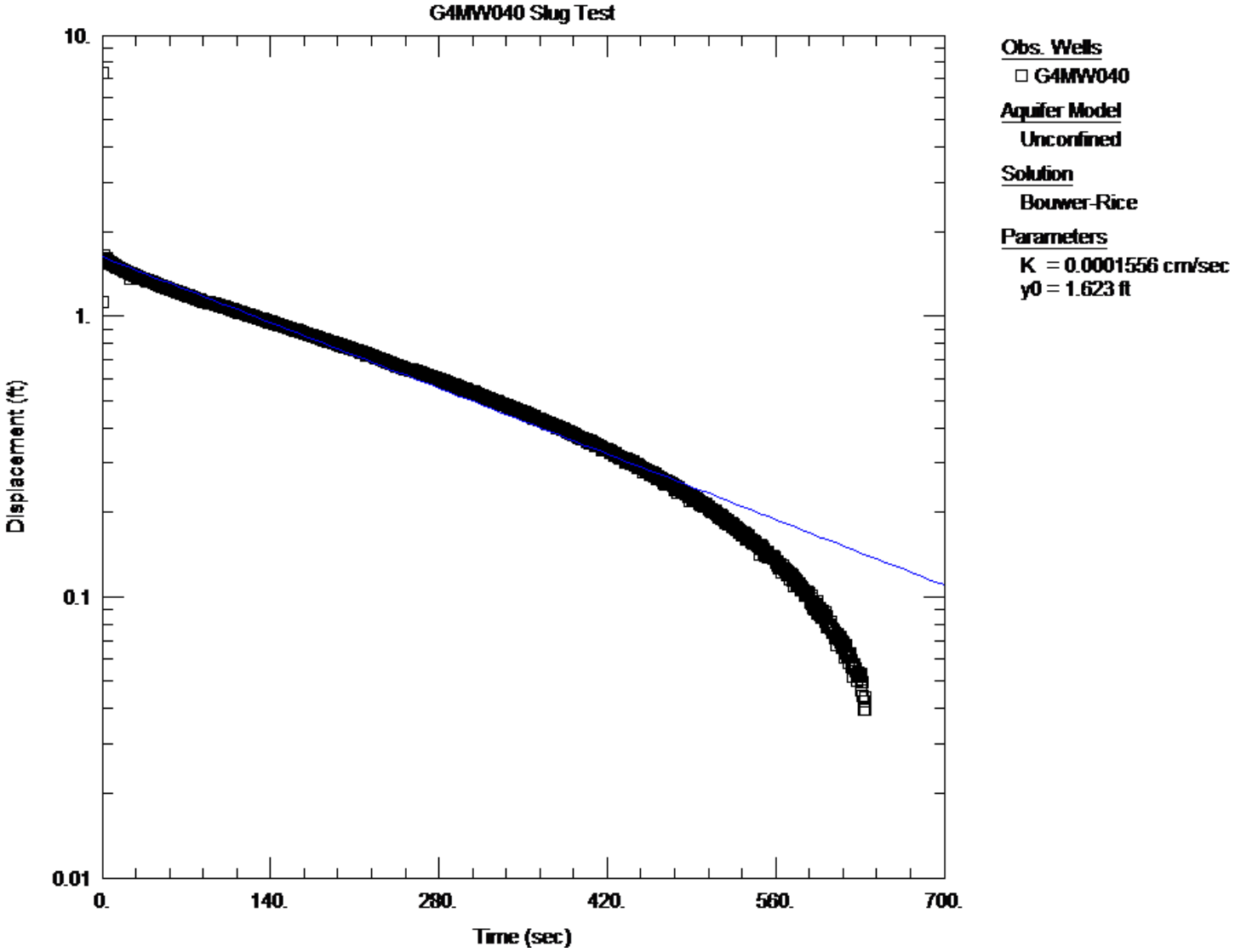
G4MW040 Slug Test
10.
1.
0.1
0.01
Displacement (ft)
0.
140.
280.
420.
560.
700.
Time (sec)
Obs. Wells
G4MW040
Aquifer Model
Unconfined
Solution
Bouwer-Rice
Parameters
K = 0.0001556 cm/sec
y0 = 1.623 ft

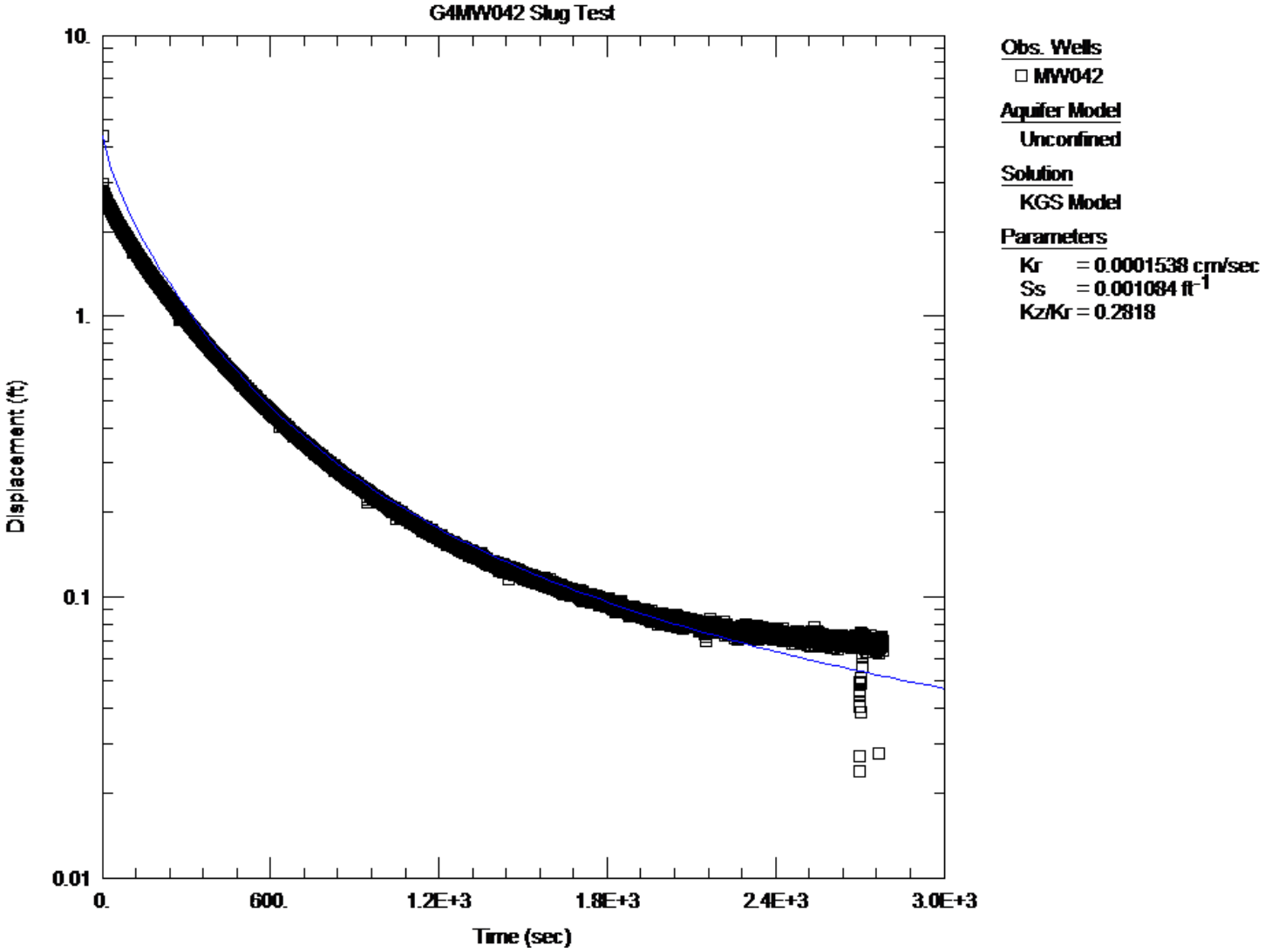
G4MW042 Slug Test
10.
1.
0.1
0.01
Displacement (ft)
0.
600.
1.2E+3
1.8E+3
2.4E+3
3.0E+3
Time (sec)
Obs. Wells
MW042
Aquifer Model
Unconfined
Solution
KGS Model
Parameters
Kr = 0.0001538 cm/sec
Ss = 0.001084 ft-1
Kz/Kr = 0.2818

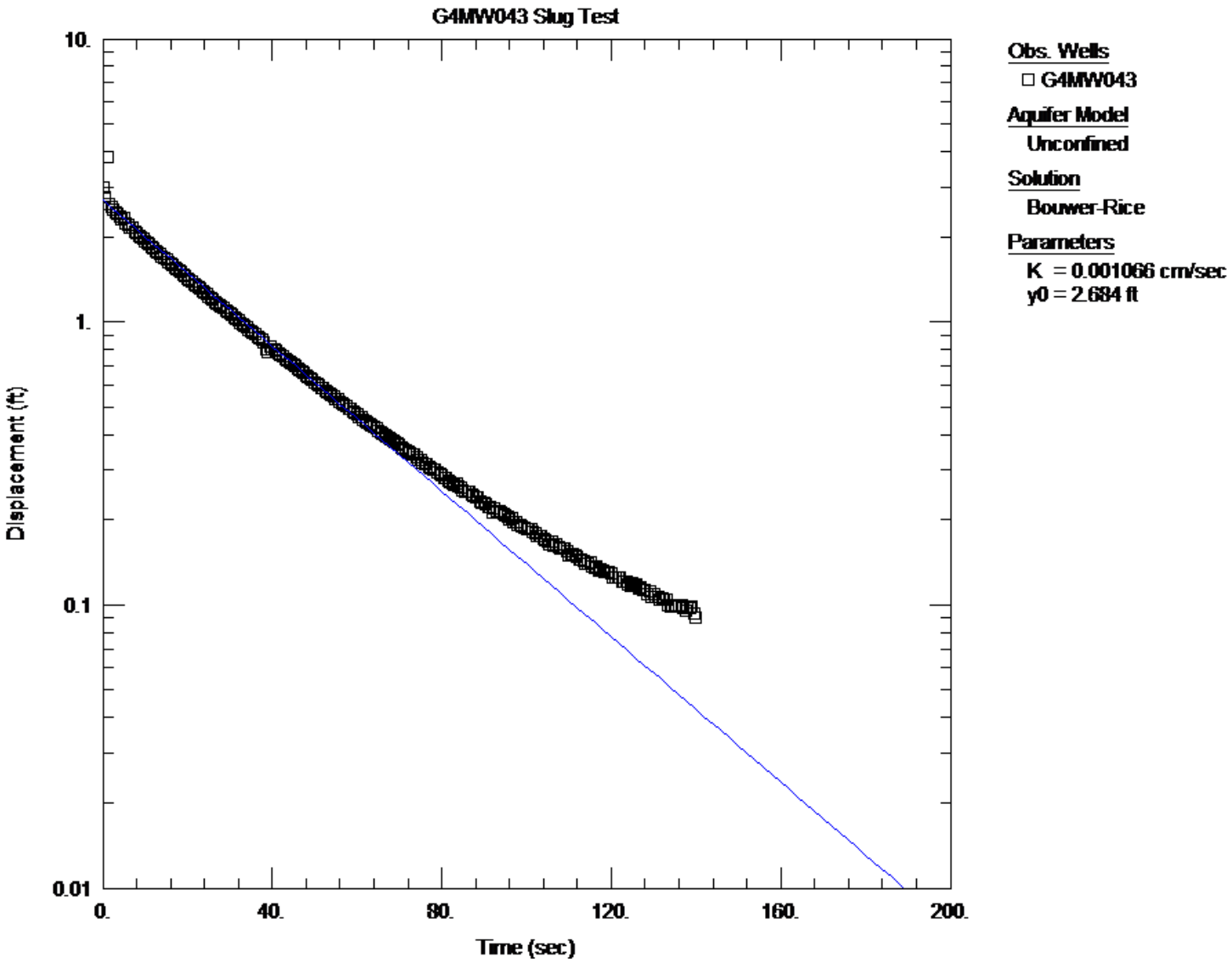
G4MW043 Slug Test
10.
1.
0.1
0.01
Displacement (ft)
0.
40.
80.
120.
160.
200.
Time (sec)
Obs. Wells
G4MW043
Aquifer Model
Unconfined
Solution
Bouwer-Rice
Parameters
K = 0.001066 cm/sec
y0 = 2.684 ft

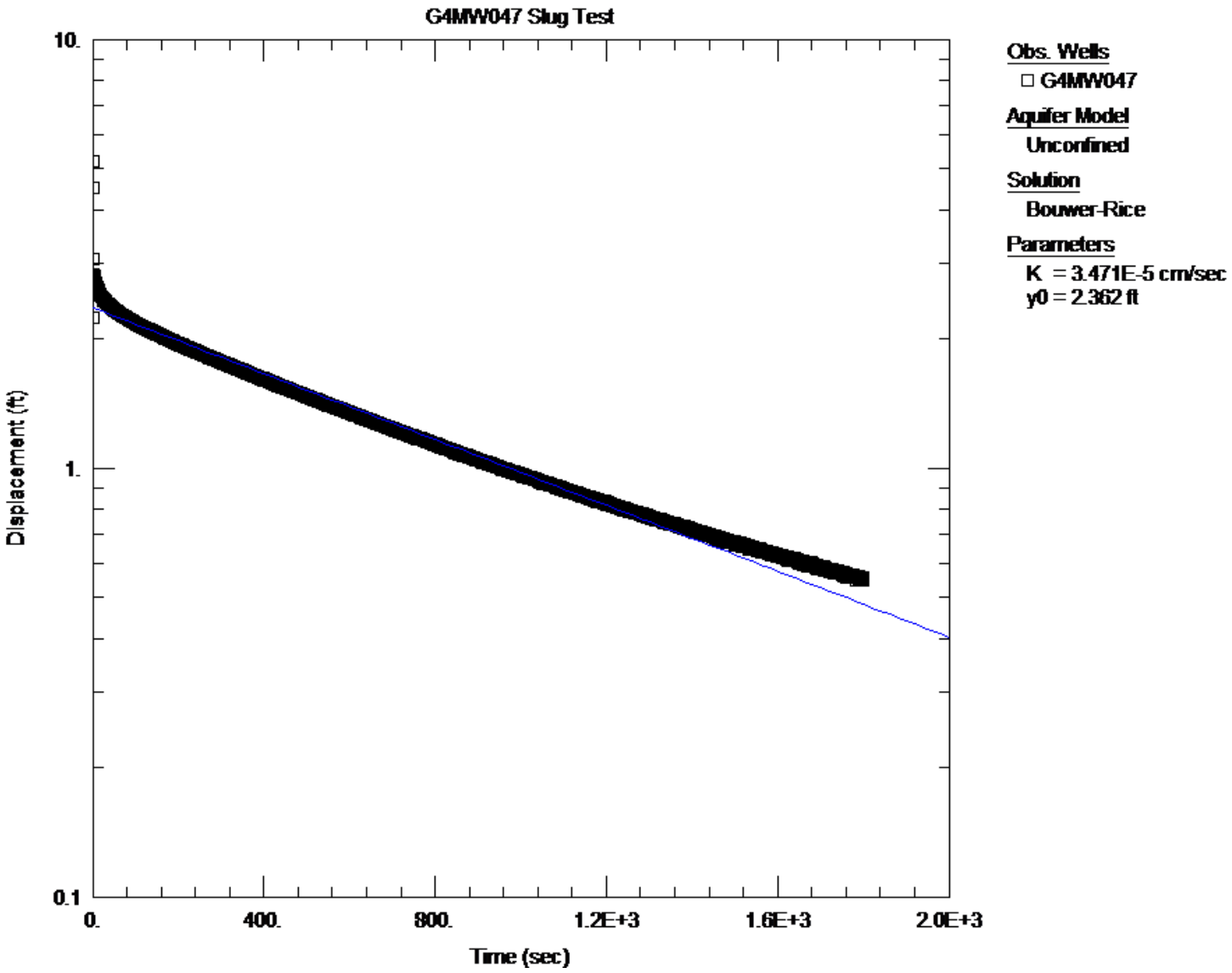
G4MW047 Slug Test
10.
1.
0.1
Displacement (ft)
0.
400.
800.
1.2E+3
1.6E+3
2.0E+3
Time (sec)
Obs. Wells
G4MW047
Aquifer Model
Unconfined
Solution
Bouwer-Rice
Parameters
K = 3.471E-5 cm/sec
y0 = 2.362 ft

ARCADIS MALCOLM PIRNIE

Appendix G

Fort Stewart Utility Maps

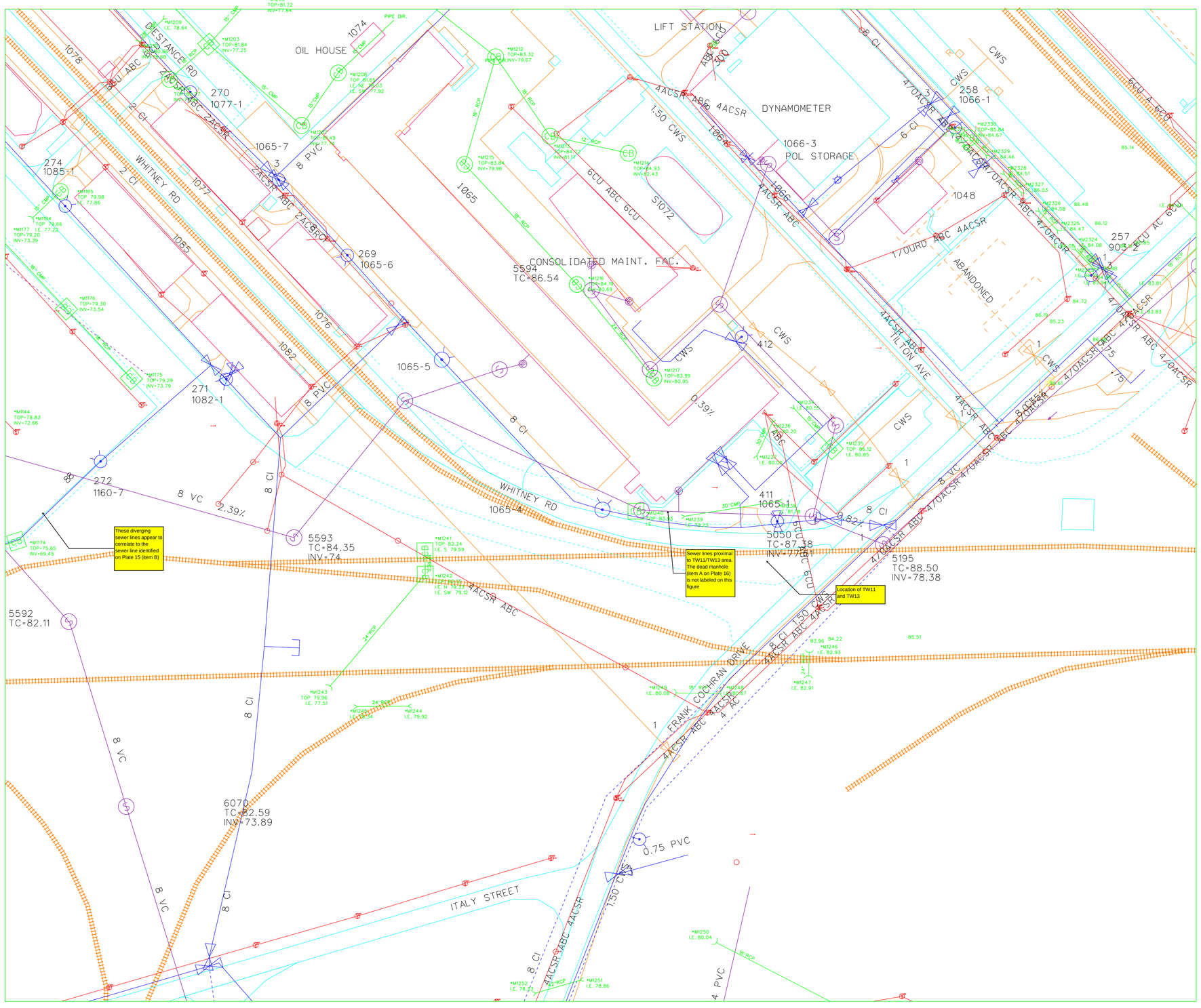

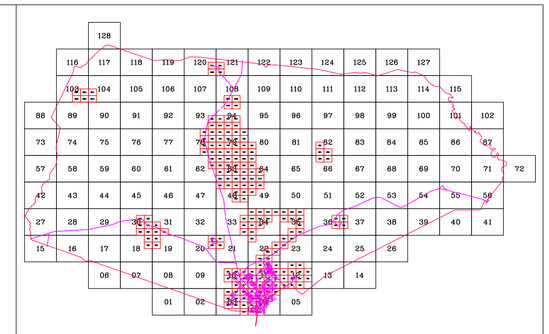

KEY MAP

LEGEND

- ELECTRICAL
- GAS
- WATER
- WASTEWATER
- STORM

SCALE: 1" = 50'

FORT STEWART
GEORGIA

DIRECTORATE OF PUBLIC WORKS
FORT STEWART, GEORGIA

U.S. ARMY CORPS OF ENGINEERS
SAVANNAH, GEORGIA

MASTER PLAN
EXISTING CONDITIONS MAP

RECOMMENDED BY THE INSTALLATION PLANNING BOARD FOR APPROVAL:

DATE:

APPROVED BY MAJOR ARMY COMMAND:

DATE:

DATE

REVISION NO.

SHEET NO.

DRAWING NO.

FILE NO.

CORPS OF ENGINEERS

U.S. ARMY

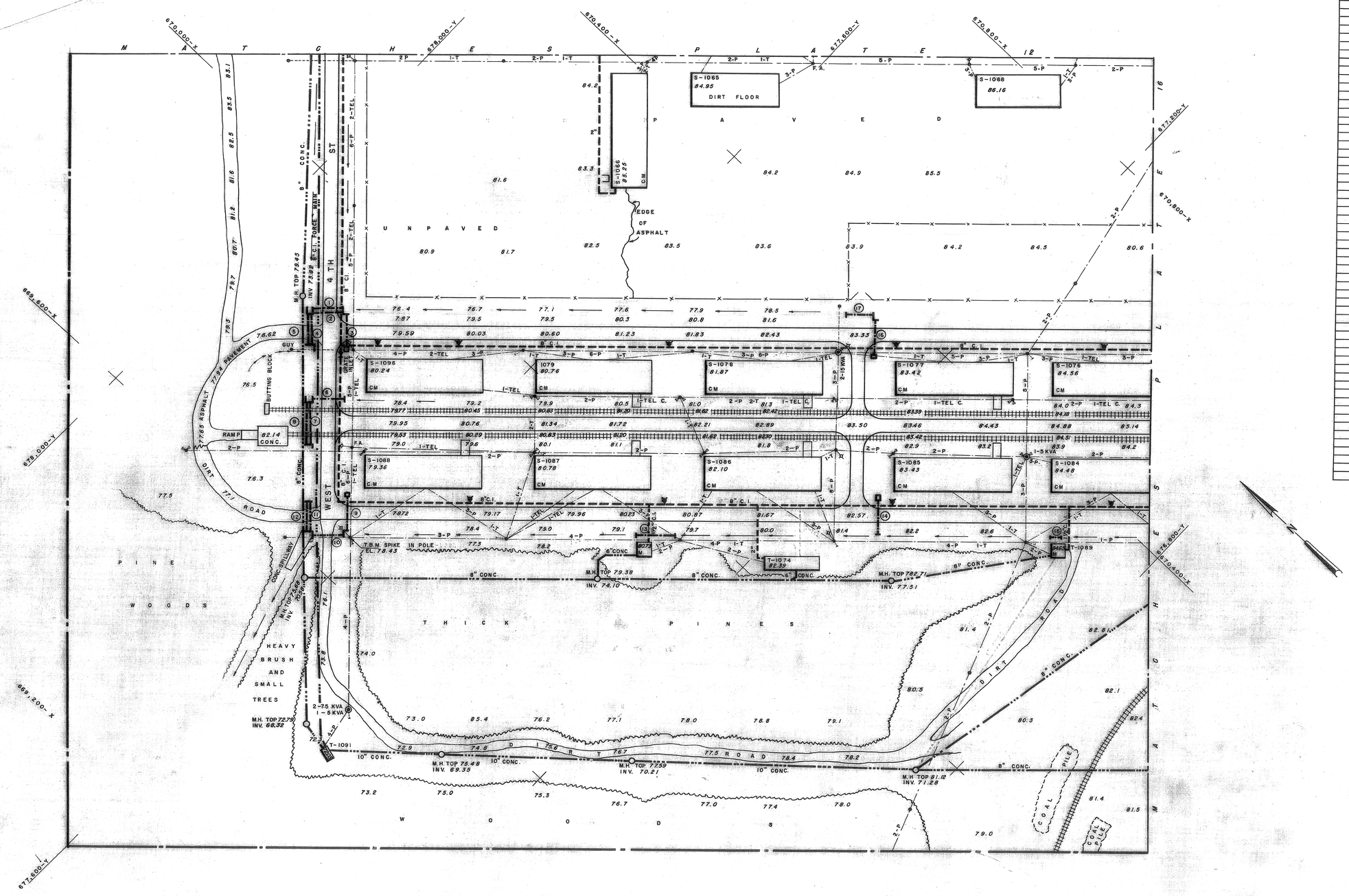

DRAINAGE STRUCTURE TABLE									
CULVERT NO.	STRUCTURE Nº FROM	STRUCTURE Nº TO	INVERT ELEVATIONS UPSTREAM	INVERT ELEVATIONS DOWN-STREAM	HEAD WALL	PIPE DIAMETER	PIPE KIND	ELEV. TOP OF STRUCT. UPSTREAM	ELEV. TOP OF STRUCT. DOWN-STREAM
1			75.64	75.29	CONC.	24"	CONC		
2			75.64	75.29	CONC	24"	CONC		
3			76.04	75.64	CONC.	18"	CONC	78.37	
4			75.27	74.84	CONC	24"	CONC		
5			75.27	74.84	CONC	24"	CONC		
6			76.06	75.38	CONC	24"	CONC		
7			75.38	73.91	CONC	24"	CONC		
8			75.38	73.91	CONC	24"	CONC		
9			74.56	74.09	CONC	18"	CONC	77.69	
10			73.82	73.08	CONC	24"	CONC.		
11			73.33	73.08	CONC	24"	CONC		
12			73.33	73.08	CONC	24"	CONC		
13			77.80	77.24		18"	CONC		
14			79.25	78.59	CONC	18"	CONC	81.35	
15			80.47	80.43		18"	CONC		
16			80.13	79.96	CONC	18"	CONC.	82.21	
17			79.96	79.76	CONC.	24"	CONC		

LEGEND

WATER
- OVERHEAD STEAM LINE
- WATER LINES
- VALVES
- FIRE HYDRANT WITH VALVE

SEWERAGE & DRAINAGE
- SANITARY SEWER
- CULVERT
- MANHOLE
- GREASE TRAP
- INLET
- PAVED OPEN DITCH
- UNPAVED OPEN DITCH

ELECTRICAL
- POWER & TELEPHONE LINES
- POLES & GUY WIRE
- TRANSFORMERS ON POLE
- UNDERGROUND CABLE
- LIGHT ON POLE
- FLOOD LIGHT AND FIRE ALARM
- UNDERGROUND TELEPHONE

GENERAL
- CHAIN LINK FENCE
- TREE LINE
- COAL BIN
- CONCRETE SLAB
- FRAME BUILDING WITH CHIMNEY
- CORRUGATED METAL BUILDING
- MASONRY BUILDING
- RAILROAD

SURVEY COMPLETE 3 DEC. 1957

REVISION	DATE	DESCRIPTION	DR.	BY

ERRETT F. GUNN
CONSULTING ENGINEER
SAVANNAH, GEORGIA

CORPS OF ENGINEERS, U.S. ARMY
OFFICE OF THE DISTRICT ENGINEER
SAVANNAH, GEORGIA

DESIGNED BY:
DRAWN BY: C. P.
CHECKED BY: E. M.
SUBMITTED BY: Errett F. Gunn, PRINCIPAL OF FIRM
APPROVED: Edgar C. Wiggins, CHIEF MILITARY SECTION
APPROVED: R. R. Lewis, CHIEF DESIGN BRANCH
APPROVED: [signature], COL., CORPS OF ENGINEERS, DISTRICT ENGINEER
DATE 10 MAR. 1958

TOPOGRAPHIC SURVEY

FORT STEWART
FORT STEWART, GEORGIA

APPROVED: James B. Edgerton, ACT. CHIEF, ENGINEERING DIVISION

SCALE: 1" = 60'
SERIAL NO.
DRAWING NUMBER 15-04-05
PLATE 15

CORPS OF ENGINEERS

U.S. ARMY

DRAINAGE STRUCTURE TABLE									
CULVERT NO.	STRUCTURE Nº FROM	STRUCTURE Nº TO	INVERT ELEVATIONS UPSTREAM	INVERT ELEVATIONS DOWN-STREAM	HEAD WALL	PIPE DIAMETER	PIPE KIND	ELEV. TOP OF STRUCT. UPSTREAM	ELEV. TOP OF STRUCT. DOWN-STREAM
1			83.52	83.00		18"	CONC.		
2			82.32	81.80	CONC.	24"	CONC.		
3			81.06	80.61		42"	CONC.		
4			82.59	BURIED		18 X 11	CORR. MTL.		
5			84.28	83.01		29 X 18	CORR. MTL.		

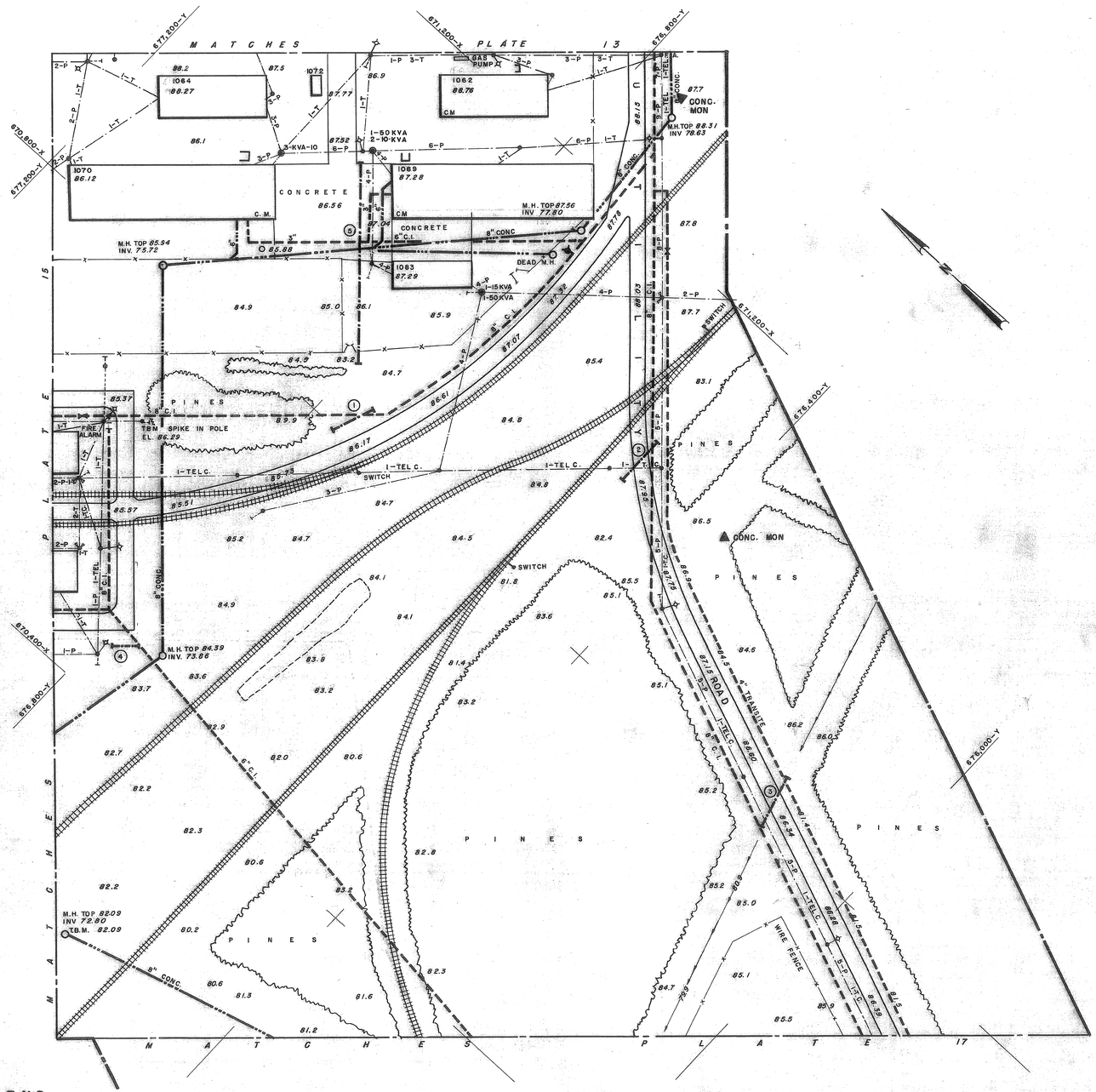

LEGEND

WATER

- OVERHEAD STEAM LINE
- WATER LINES
- VALVES
- FIRE HYDRANT WITH VALVES

SEWERAGE & DRAINAGE

- SANITARY SEWER
- CULVERT
- MANHOLE
- GREASE TRAP
- INLET
- PAVED OPEN DITCH
- UNPAVED OPEN DITCH

ELECTRICAL

- 2-P 1-T.C. / 1-TEL — POWER & TELEPHONE LINES
- POLES & GUY WIRE
- TRANSFORMERS ON POLE
- UNDERGROUND CABLE
- LIGHT ON POLE
- FA — FLOOD LIGHT AND FIRE ALARM
- UNDERGROUND TELEPHONE

GENERAL

- CHAIN LINK FENCE
- TREE LINE
- COAL BIN
- CONCRETE SLAB
- FRAME BUILDING WITH CHIMNEY
- CM — CORRUGATED METAL BUILDING
- M — MASONRY BUILDING
- RAILROAD

SURVEY COMPLETE 3 DEC. 1957

REVISION	DATE	DESCRIPTION	DR.	BY

ERRETT F. GUNN
CONSULTING ENGINEER
SAVANNAH, GEORGIA

CORPS OF ENGINEERS, U.S. ARMY
OFFICE OF THE DISTRICT ENGINEER
SAVANNAH, GEORGIA

DESIGNED BY:

DRAWN BY: C. P. CHECKED BY: E. M.

SUBMITTED BY: PRINCIPAL OF FIRM

APPROVED: CHIEF MILITARY SECTION

APPROVED: CHIEF DESIGN BRANCH

APPROVED: ACT. CHIEF, ENGINEERING DIVISION

APPROVED: COL., CORPS OF ENGINEERS, DISTRICT ENGINEER

DATE 10 MAR. 1958

TOPOGRAPHIC SURVEY

FORT STEWART

FORT STEWART, GEORGIA

SCALE: 1" = 60'

SERIAL NO

DRAWING NUMBER	PLATE
15-04-05	16

CORPS OF ENGINEERS

U.S. ARMY

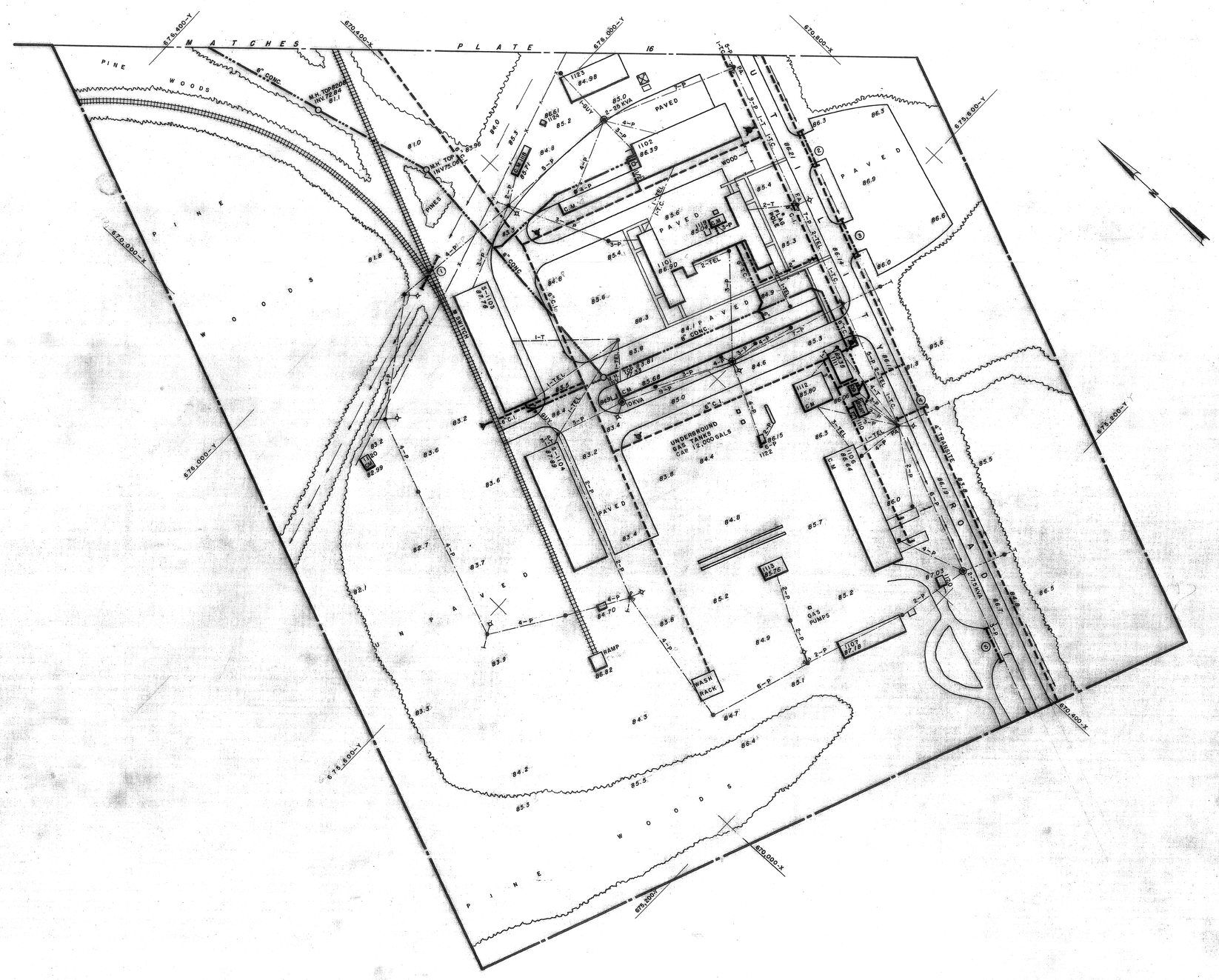

DRAINAGE STRUCTURE TABLE

CULVERT NO.	STRUCTURE Nº FROM	TO	INVERT ELEVATIONS UPSTREAM	DOWN-STREAM	HEAD WALL	PIPE DIAMETER	PIPE KIND	ELEV. TOP OF STRUCT. UPSTREAM	DOWN-STREAM
1			77.59	77.08		36"	CONC.		
2			81.81	81.18	CONC.	36"	CONC.		
3			82.09	81.85	CONC.	36"	CONC.		
4			82.16	82.09	CONC.	18"	CONC.		
5			84.49	84.22		24 X 18	CORR MTL.		

LEGEND

WATER
- OVERHEAD STEAM LINE
- WATER LINES
- VALVES
- FIRE HYDRANT WITH VALVE

SEWERAGE & DRAINAGE
- SANITARY SEWER
- CULVERT
- MANHOLE
- GREASE TRAP
- INLET
- PAVED OPEN DITCH
- UNPAVED OPEN DITCH

ELECTRICAL
- 2-TEL 1-T.C. 3-P — POWER & TELEPHONE LINES
- POLES & GUY WIRE
- TRANSFORMERS ON POLE
- UNDERGROUND CABLE
- LIGHT ON POLE
- FAB — FLOOD LIGHT AND FIRE ALARM
- UNDERGROUND TELEPHONE

GENERAL
- CHAIN LINK FENCE
- TREE LINE
- COAL BIN
- CONCRETE SLAB
- FRAME BUILDING WITH CHIMNEY
- CM — CORRUGATED METAL BUILDING
- M — MASONRY BUILDING
- RAILROAD

SURVEY COMPLETE 3 DEC. 1957

REVISION	DATE	DESCRIPTION	DR.	BY

ERRETT F. GUNN
CONSULTING ENGINEER
SAVANNAH, GEORGIA

CORPS OF ENGINEERS, U.S. ARMY
OFFICE OF THE DISTRICT ENGINEER
SAVANNAH, GEORGIA

DESIGNED BY:
DRAWN BY: C.P. CHECKED BY: E.M.
SUBMITTED BY: Carroll F. Gunn PRINCIPAL OF FIRM
APPROVED: CHIEF, MILITARY SECTION
APPROVED: K.K. Lewis CHIEF, DESIGN BRANCH
APPROVED: COL., CORPS OF ENGINEERS, DISTRICT ENGINEER
DATE 10 MAR. 1958

TOPOGRAPHIC SURVEY

FORT STEWART

FORT STEWART, GEORGIA

APPROVED: James B. Edgerton ACT. CHIEF, ENGINEERING DIVISION

SCALE: 1" = 60' SERIAL NO.

DRAWING NUMBER 15-04-05

PLATE 17

U-2 AREA (BLOCK 1000)

Building Number	Description	Type	SF Floor	Size	Vault Number	Plan Number	Capacity
1001	Warehouse	SH-18	9267	60'6"x153'2"		700-326	8322 SF
1002	Warehouse	SH-13	9267	60'6"x153'2"		700-324	8827 SF
1003	Warehouse	SH-13	9267	60'6"x153'2"		700-324	8827 SF
1004	Warehouse, Mod, (Clothing Sales Store)	SH-13	9267	60'6"x153'2"		700-324	8827 SF
1005	Warehouse	SH-13	9267	60'6"x153'2"		700-324	8827 SF
1006	Warehouse	SH-13	9267	60'6"x153'2"		700-324	8827 SF
1007	Warehouse, Mod (Commissary)	SH-18	9267	60'6"x153'2"		700-326, BA 446 BA 515	8322 SF
1008	Bakery	Bak-3	7670	37'0"x135'0" (Irr) 48'9" x 55'2" 12'0"x22'0"		700-256 A-12	Camp
1009	Cold Storage	CS-1 Mod	10153	83'9" x 120'5" 10'6"x6'0"		BA-436 BA-292	
1010	Small Animal Clinic		2108	30'9" x 48'0"		BA-483	
1011	Ice Storage	IS-20	351	22'4" x 31'0" 17'0"x20'8"		800-776	
1012	Loading Dock	Load Dock	2520	18'0"x140'0"		AR-042	
1013	Warehouse	INSUL	7504	47'0" x 159'6"		ARQ-191 T.O. 11.21	7680 SF
1014	Warehouse, Mod (QM Furniture Shop)	INSUL	7496	47'0" x 159'6"		ARQ-191 T.O. 11.21	7680 SF
1015	Warehouse	INSUL	7496	47'0" x 159'6"		ARQ-191 T.O. 11.21	7680 SF
1016	Warehouse	NON-INSUL	7496	47'0" x 159'6"		ARQ-191 T.O. 11.21	7680 SF
1017	Warehouse		7496	47'0" x 159'6"		ARQ-243 T.O. 11.21	7680 SF
1018	Warehouse	SH-13	9267	60'6"x153'2"		700-324	8827 SF
1019	Warehouse	SH-13	9267	60'6"x153'2"		700-324	8827 SF
1020	Warehouse	SH-13	9267	60'6"x153'2"		700-324	8827 SF
1021	Warehouse	SH-13	9267	60'6"x153'2"		700-324	8827 SF
1022	Warehouse, Mod (Self Service Supply)	SH-13	9267	60'6"x153'2"		700-324, BA 470	8827 SF
1023	Warehouse	SH-13	9267	60'6"x153'2"		700-324	8827 SF
1024	Warehouse	NON-INSUL	6744	47'0" x 143'6"		ARQ-191	6912 SF
1027	Warehouse	NON-INSUL	9024	47'0" x 192'0"		ARQ-191 T.O. 11.21	9216 SF
1028	Warehouse	Non-INSUL	7496	47 x 159'6"		ARQ-191 T.O. 11.21	6912 SF
1029	Platform Wood	Platform	1328	32'0"x41'6"		ARQ-392	
1030	Platform	Concrete	2324	Irreg		BA-142.1	
1031	Warehouse	NON-INSUL	7496	47'0" x 159'6"		ARQ-191 T.O. 11.21	7680 SF
1032	Warehouse	NON-INSUL	7496	47'0" x 159'6"		ARQ-191 T.O. 11.21	7680 SF
1033	Warehouse	NON-INSUL	7496	47'0" x 159'6"		ARQ-191 T.O. 11.21	7680 SF
1034	Warehouse	Non-INSUL	7496	47'0" x 159'6"		ARQ-191 T.O. 11.21	7680 SF
1080	T.C. Office	OB-A-T	1952	19' 10"x 100'0"		700-5201 ARQ-482	
~~1092~~	~~Storehouse~~	~~CCC~~	~~1495~~	~~24'6"x61'0"~~			
1099	Platform	Conc	664	16'0"x41'6"		ARQ 392	

U-3 AREA
(BLOCK-1000)

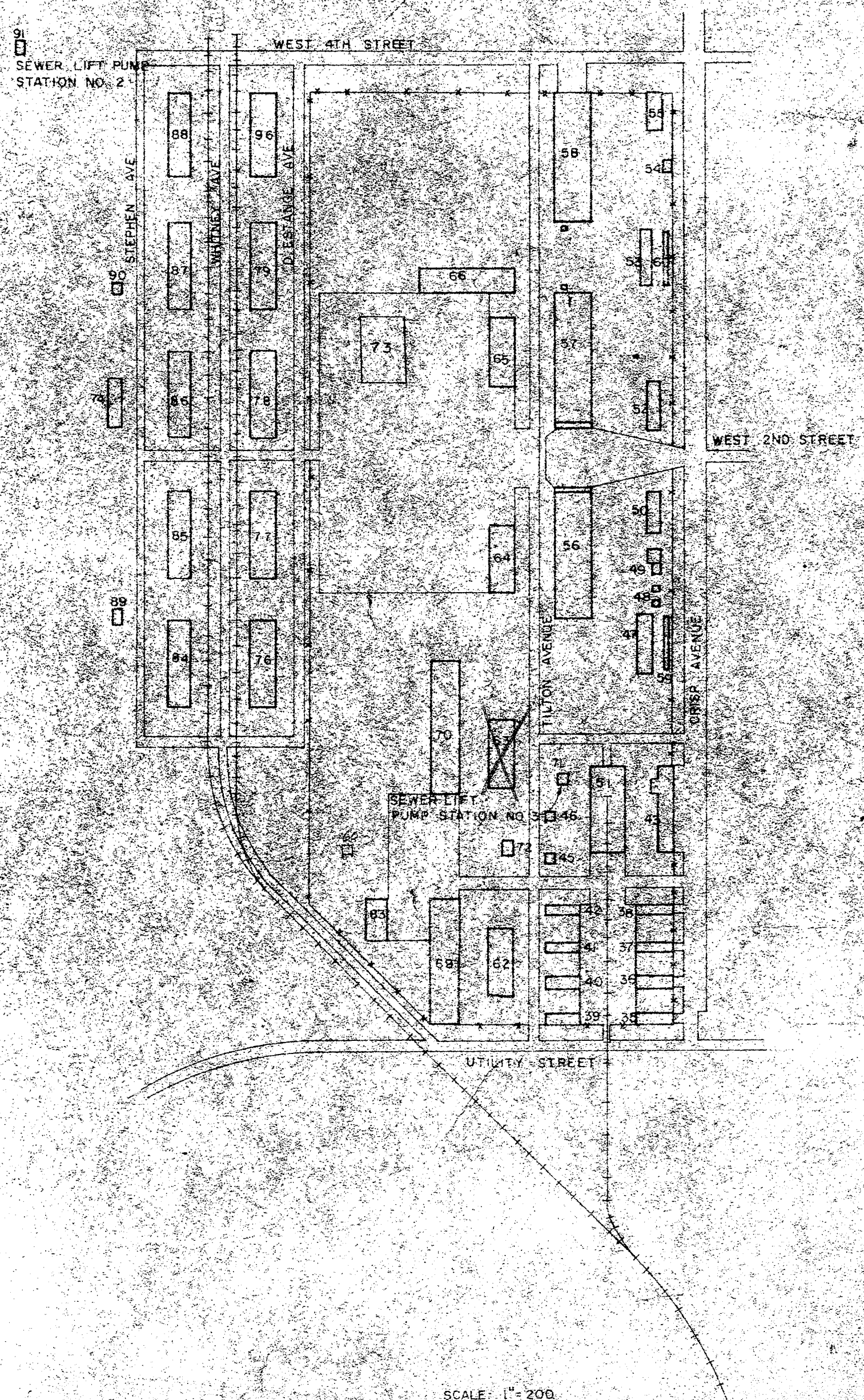

SCALE: 1" = 200'

U-3 AREA (BLOCK 1000)

Building Number	Description	Type	SF Floor	Size	Vault Number	Plan Number	Capacity
1035	Ord Whse	OrdWHStd	1626	25'2½" x 64' 7½"		700-1480	1626 SF
1036	Ord Whse	OrdWHStd	1626	25'2½" x 64'7½"		700-1480	1626 SF
1037	Ord Whse	OrdWHStd	1626	25'2½" x 64'7½"		700-1480	1626 SF
1038	Ord Whse	OrdWHStd	1626	25'2½" x 64'7½"		700-1480	1626 SF
1039	Ord Whse	OrdWHStd	1626	25'2½" x 64'7½"		700-1480	1626 SF
1040	Ord Whse	OrdWHStd	1626	25'2½" x 64'7½"	30x20	700-1480	1626 SF
1041	Ord Whse	OrdWHStd	1626	25'2½" x 64'7½"		700-1480	1626 SF
1042	Ord Whse	OrdWHStd	1626	25'2½" x 64'7½"		700-1480	1626 SF
1043	Admin	A-7	4414	25'4" x 68'2"(2)		700-396	
				20'0" x 48'0"		U-109	
1045	Paint Shop	PaintShop	800	20'0" x 30'0"		ARQ-033	
1046	Boiler House	BoilerHs	658	25'0"x25'4"		632-441	
1047	Wash Rack	WashRack	3000	25'0" x 120'0"		700-348	10 Car
1048	Oil Storage	Oil Stg	224	14'0" x 16'0"		700-384	
1049	Oil House	T.O.	400	20'0" x 20'0"		T.O. 11.5	
1050	Motor Repair	SP-2	3114	37'0" x 84' 2"		700-314	6 Stalls
1051	Ord Shop	S	12205	97'0" x 180'2"		632-413	
1052	Admin	T.O.	2000	20'0" x 100'0"		ARQ-344	
						T.O. 11.13	
1053	Wash Rack	WashRack	3000	25'0" x 120'0"		700-348	10 Car
1054	Oil Storage	OilStg	224	14'0"x 16'0"		700-384	
1055	Motor Repair	SP-2	3114	37'0"x 84' 2"		700-314	6 Stalls
1056	Shop	SP-14	18260	76'1½" x 250'0"		700-1390	
1057	Shop	SP-14	18260	76'1½" x 250'0"		700-1390	
1058	Shop	SP-14	18260	76'1½" x 240'0"			
1059	Grease Rack	Gr Rack		6'0" x 114'2"		300-1026	
1061	Grease Rack	Gr Rack		6'0" x 114'2"		300-1026	
1063	Motor Shed	SD-17	5520	46'0" x 120'0"		700-372	20 Vehicles
1064	Motor Shed	SD-17	5520	46'0" x 120'0"		700-372	20 Vehicles
1065	Motor Shed	SD-17	5520	46'0" x 120'0"		700-372	20 Vehicles
1066	Motor Shed	SD-17	5520	46'0" x 120'0"		700-372	20 Vehicles
1068	Warehouse	T.O.	7496	47'0" x 159'6"		ARQ-243	
						T.O. 11.21	
1069	Engr Field Mtn Shop	Shop D	14096	63'2" x 223'2"		ARQ-424	
						T.O. 652.1550	
1070	Motor Shop	MS-A-T	14336	64'0" x 224'0"		ARQ-424	14336 SF
						T.O. 700-6008	
1071	Lift Sta		100	10'0" x 10'0"		ARQ-51	
1072	Oil House	OOC	255	10'0" x 25'6"			
1074	Lavatory	L-G-T	1520	20'0" x 76'0"		700-6607	
1076	Warehouse	WH-B-T	7680	48'0" x 160'0"		ARQ-369	7680 SF
						T.O. 700-6605	
1077	Warehouse	WH-B-T	7680	48'0" x 160'0"		ARQ-369	7680 SF
						T.O. 700-6605	
1078	Warehouse	WH-B-T	7680	48'0" x 160'0"		ARQ-369	7680 SF
						T.O. 700-6605	
1079	Warehouse	WH-B-T	7680	48'0" x 160'0"		ARQ-369	
						T.O. 700-6605	
1083	Tech Instr	Mod	2816	32'0" x 88'0"		700-5100	
1084	Warehouse	WH-B-T	7680	48'0" x 160'0"		ARQ-369	7680 SF
						T.O. 700-6605	
1085	Warehouse	WH-B-T	7680	48'0" x 160'0"		ARQ-369	
						T.O. 700-6605	
1086	Warehouse	WH-B-T	7680	48'0" x 160'0"		ARQ-369	7680 SF
						T.O. 700-6605	
1087	Warehouse	WH-B-T	7680	48'0" x 160'0"		ARQ-369	7680 SF
						T.O. 700-6605	
1088	Warehouse	WH-B-T	7680	48'0" x 160'0"		ARQ-369	7680 SF
						T.O. 700-6605	
1089	Lavatory	L-A-T	400	20'0" x 20'0"		ARQ-371	25 Men
						T.O. 700-6601	
1090	Lavatory	L-A-T	400	20'0" x 20'0"		ARQ-371	25 Men
						T.O. 700-6601	
1091	Lift Sta		228	12'0" x 19'0"		U-080	
						U-080A	
1095	Warehouse	WH-B-T	7680	48'0" x 160'0"		ARQ-369	7680 SF
1073	Tank Mtc Shop	METAL	[illegible]	[illegible]		T.O. 700-6605	
1060	Oil House	Metal	320	16' x 20'			

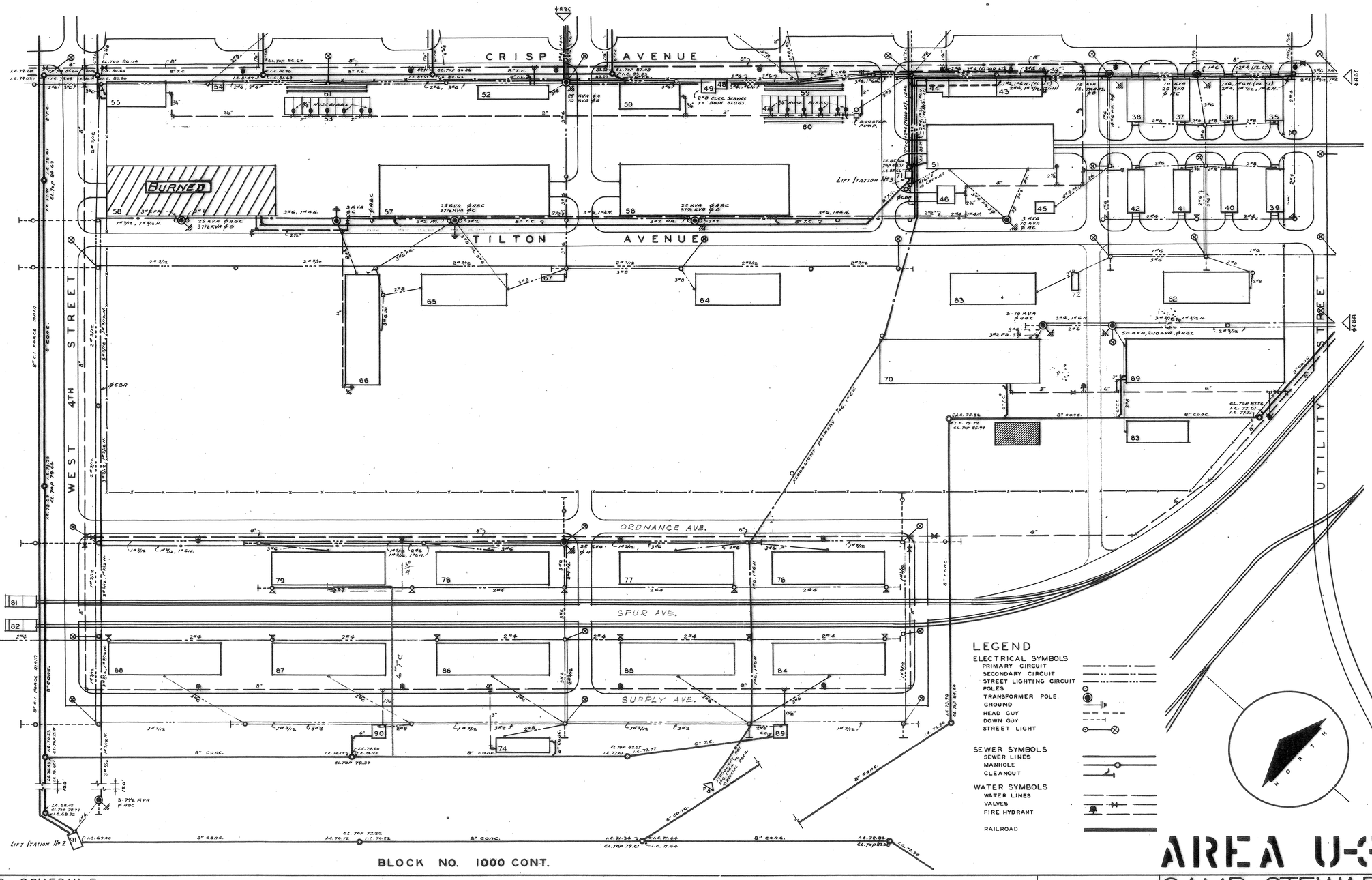

BLOCK NO. 1000 CONT.

AREA U-3

BUILDING SCHEDULE

NO.	NAME	TYPE	DRAWING NO.	SIZE	NO.	NAME	TYPE	DRAWING NO.	SIZE	NO.	NAME	TYPE	DRAWING NO.	SIZE
1035 THRU 1042	ORD. WAREHOUSE	STAND.	700-1480 K-8	25-2½ x 64-7¼	1056-1057-1058	MOTOR REPAIR	SP-14	700-1390 K-8	76-1½ x 240-0	1071	SEWER LIFT STA.		ARQ-51 e	10-0 × 10-0
1043	ADMINISTRATION	A-7	700-396 C-D A-2	25-4 × 63-2	1059-1060-1061	GREASE RACK	2 CAR	800-1026 A-10	6-0 × 114-2	1091	SEWER LIFT STA.		U-080, U-080A A-11	12-0 × 19-0
	ADMINISTRATION		700-251 - ARQ-425 A-10-J	25-4 × 68-1	1062-1063-1064-1065	MOTOR SHED	SD-17	700-372 A-3	46-0 × 120-0	1074	LAVATORY	L-G-T	T.O.-700-6607 GS ½	20-0 × 76-0
1044	ADMINISTRATION		AR-033 A-12	20-0 × 30-0	1066	WAREHOUSE	T.O.	T.O.-11.21 - ARQ-243 A-12	48-0 × 160-0	1072	STORAGE	CCC	CCC OIL HOUSE	10'-0" x 25'-0"
1045	PAINT SHOP		AR-033 A-12	20-0 × 30-0	1067	OFFICE			10-0 × 32-9	1073	STORAGE	CCC		31'-0" x 63'-0"
1046	BOILER HOUSE		652-441 A-1	25-0 × 26-4	1069	ORD. R'PR. SHOP	SHOP-G	T.O.-652-1550 - ARQ-424	64-0 × 224-0					
1047-1053	WASH RACK	10 CAR	700-348 A-3	25-0 × 120-0	1070	MOTOR REPAIR	MS-A-T	T.O.-700-6008 - ARQ-424 B-4-4	64-0 × 224-0					
1048-1054	OIL STORAGE		700-384 A-3	14-0 × 16-0	1076 THRU 1079									
1049	OIL HOUSE	T.O.	T.O-11.6 I-16	20-0 × 20-0	1084 THRU 1088	WAREHOUSE	WH-BT	T.O.-700-6605-ARQ-369	48-0 × 160-0					
1050-1055	MOTOR REPAIR	SP-2	700-314 K-5	37-0 × 84-0	1081-1082	PLATFORMS		ARQ-392 A-14-1	16-0 × 41-0					
1051	ORDNANCE SHOP	C	652-413 A-1	65-0 × 180-0	1083	TECH. INSTR. BLDG.	MOD.	T.O.-700-5100-ARQ-474-5	32-0 × 88-0					
1052	ADMINISTRATION	T.O.	T.O.-1113 - ARQ-244 B-4	20-0 × 100-0	1089-1090	LAVATORY	L-A-T	T.O.-700-6601-ARQ-371	19-9 × 19-9					

B-4

B-4-D-4

G-6-B-4

RECORD DRAWING

CAMP STEWART, GA.

UNIT MAP

SCALE 1" = 80'-0"

DRAWN BY	AREA ENGINEER, OFFICE, CAMP STEWART, GA.	DRWG NO.
CHECKED BY W.N.P.	SUBMITTED D.C. Mackenzie LT. COL. CORPS OF ENGRS., AREA ENGINEER	REC 58
DATE NOV. 1. 1943	U.S. ENGINEER OFFICE, SAVANNAH, GA. APPROVED ..... LT. COL. CORPS OF ENGRS., DISTRICT ENGINEER	

WILLIAM N. PARSONS · ARCHITECT · PROJECT ENGINEER

THIS MAP CORRECT TO: 11-25-43

Appendix H

ProUCL Outputs

	A	B	C	D	E	F	G	H	I	J	K	L
1				General UCL Statistics for Data Sets with Non-Detects								
2			User Selected Options									
3			From File	For ProUCL_Sediment.wst								
4			Full Precision	OFF								
5			Confidence Coefficient	95%								
6			Number of Bootstrap Operations	2000								
7												
8												
9	Result (acetone)											
10												
11						General Statistics						
12						Number of Valid Data	8			Number of Detected Data		6
13						Number of Distinct Detected Data	6			Number of Non-Detect Data		2
14										Percent Non-Detects		25.00%
15												
16				Raw Statistics						Log-transformed Statistics		
17						Minimum Detected	20			Minimum Detected		2.996
18						Maximum Detected	130			Maximum Detected		4.868
19						Mean of Detected	68.67			Mean of Detected		4.044
20						SD of Detected	41.65			SD of Detected		0.703
21						Minimum Non-Detect	38			Minimum Non-Detect		3.638
22						Maximum Non-Detect	120			Maximum Non-Detect		4.787
23												
24	Note: Data have multiple DLs - Use of KM Method is recommended									Number treated as Non-Detect		7
25	For all methods (except KM, DL/2, and ROS Methods),									Number treated as Detected		1
26	Observations < Largest ND are treated as NDs									Single DL Non-Detect Percentage		87.50%
27												
28						Warning: There are only 6 Detected Values in this data						
29						Note: It should be noted that even though bootstrap may be performed on this data set						
30						the resulting calculations may not be reliable enough to draw conclusions						
31												
32						It is recommended to have 10-15 or more distinct observations for accurate and meaningful results.						
33												
34												
35						UCL Statistics						
36				Normal Distribution Test with Detected Values Only						Lognormal Distribution Test with Detected Values Only		
37						Shapiro Wilk Test Statistic	0.948			Shapiro Wilk Test Statistic		0.952
38						5% Shapiro Wilk Critical Value	0.788			5% Shapiro Wilk Critical Value		0.788
39						Data appear Normal at 5% Significance Level				Data appear Lognormal at 5% Significance Level		
40												
41				Assuming Normal Distribution						Assuming Lognormal Distribution		
42						DL/2 Substitution Method				DL/2 Substitution Method		
43						Mean	61.38			Mean		3.913
44						SD	39.26			SD		0.712
45						95% DL/2 (t) UCL	87.68			95% H-Stat (DL/2) UCL		135.5
46												
47						Maximum Likelihood Estimate(MLE) Method	N/A			Log ROS Method		
48						MLE method failed to converge properly				Mean in Log Scale		3.922
49										SD in Log Scale		0.648
50										Mean in Original Scale		60.46

	A	B	C	D	E	F	G	H	I	J	K	L
51											SD in Original Scale	38.59
52											95% t UCL	86.31
53											95% Percentile Bootstrap UCL	83.62
54											95% BCA Bootstrap UCL	85.88
55											95% H-UCL	118.5
56												
57				**Gamma Distribution Test with Detected Values Only**					**Data Distribution Test with Detected Values Only**			
58					k star (bias corrected)	1.541			**Data appear Normal at 5% Significance Level**			
59					Theta Star	44.55						
60					nu star	18.5						
61												
62					A-D Test Statistic	0.244			**Nonparametric Statistics**			
63					5% A-D Critical Value	0.702					Kaplan-Meier (KM) Method	
64					K-S Test Statistic	0.702					Mean	61.39
65					5% K-S Critical Value	0.335					SD	37.27
66				**Data appear Gamma Distributed at 5% Significance Level**							SE of Mean	15.11
67											95% KM (t) UCL	90.02
68				**Assuming Gamma Distribution**							95% KM (z) UCL	86.25
69					Gamma ROS Statistics using Extrapolated Data						95% KM (jackknife) UCL	90.1
70					Minimum	20					95% KM (bootstrap t) UCL	93.23
71					Maximum	130					95% KM (BCA) UCL	87.81
72					Mean	61.29					95% KM (Percentile Bootstrap) UCL	87.7
73					Median	51.1					95% KM (Chebyshev) UCL	127.3
74					SD	38.72					97.5% KM (Chebyshev) UCL	155.8
75					k star	1.84					99% KM (Chebyshev) UCL	211.8
76					Theta star	33.31						
77					Nu star	29.44			**Potential UCLs to Use**			
78					AppChi2	18.05					95% KM (t) UCL	90.02
79					95% Gamma Approximate UCL (Use when n >= 40)	99.95					95% KM (Percentile Bootstrap) UCL	87.7
80					95% Adjusted Gamma UCL (Use when n < 40)	113.9						
81	**Note: DL/2 is not a recommended method.**											
82												
83				**Note: Suggestions regarding the selection of a 95% UCL are provided to help the user to select the most appropriate 95% UCL.**								
84				**These recommendations are based upon the results of the simulation studies summarized in Singh, Maichle, and Lee (2006).**								
85				**For additional insight, the user may want to consult a statistician.**								
86												
87												
88	**Result (arsenic)**											
89												
90					**General Statistics**							
91					Number of Valid Observations	8					Number of Distinct Observations	8
92												
93				**Raw Statistics**					**Log-transformed Statistics**			
94					Minimum	0.5					Minimum of Log Data	-0.693
95					Maximum	17					Maximum of Log Data	2.833
96					Mean	3.375					Mean of log Data	0.386
97					Geometric Mean	1.471					SD of log Data	1.251
98					Median	0.905						
99					SD	5.638						
100					Std. Error of Mean	1.993						

	A	B	C	D	E	F	G	H	I	J	K	L
101					Coefficient of Variation	1.67						
102					Skewness	2.583						
103												
104												
105					Warning: There are only 8 Values in this data							
106					Note: It should be noted that even though bootstrap methods may be performed on this data set,							
107					the resulting calculations may not be reliable enough to draw conclusions							
108												
109					The literature suggests to use bootstrap methods on data sets having more than 10-15 observations.							
110												
111					Relevant UCL Statistics							
112					Normal Distribution Test				Lognormal Distribution Test			
113					Shapiro Wilk Test Statistic	0.585			Shapiro Wilk Test Statistic			0.85
114					Shapiro Wilk Critical Value	0.818			Shapiro Wilk Critical Value			0.818
115					Data not Normal at 5% Significance Level				Data appear Lognormal at 5% Significance Level			
116												
117					Assuming Normal Distribution				Assuming Lognormal Distribution			
118					95% Student's-t UCL	7.151			95% H-UCL			22.02
119					95% UCLs (Adjusted for Skewness)				95% Chebyshev (MVUE) UCL			8.258
120					95% Adjusted-CLT UCL (Chen-1995)	8.599			97.5% Chebyshev (MVUE) UCL			10.62
121					95% Modified-t UCL (Johnson-1978)	7.455			99% Chebyshev (MVUE) UCL			15.27
122												
123					Gamma Distribution Test				Data Distribution			
124					k star (bias corrected)	0.536			Data Follow Appr. Gamma Distribution at 5% Significance Level			
125					Theta Star	6.297						
126					MLE of Mean	3.375						
127					MLE of Standard Deviation	4.61						
128					nu star	8.575						
129					Approximate Chi Square Value (.05)	3.072			Nonparametric Statistics			
130					Adjusted Level of Significance	0.0195			95% CLT UCL			6.654
131					Adjusted Chi Square Value	2.302			95% Jackknife UCL			7.151
132									95% Standard Bootstrap UCL			6.422
133					Anderson-Darling Test Statistic	0.84			95% Bootstrap-t UCL			20.22
134					Anderson-Darling 5% Critical Value	0.747			95% Hall's Bootstrap UCL			19.72
135					Kolmogorov-Smirnov Test Statistic	0.296			95% Percentile Bootstrap UCL			7.008
136					Kolmogorov-Smirnov 5% Critical Value	0.305			95% BCA Bootstrap UCL			8.226
137					Data follow Appr. Gamma Distribution at 5% Significance Level				95% Chebyshev(Mean, Sd) UCL			12.06
138									97.5% Chebyshev(Mean, Sd) UCL			15.82
139					Assuming Gamma Distribution				99% Chebyshev(Mean, Sd) UCL			23.21
140					95% Approximate Gamma UCL (Use when n >= 40)	9.42						
141					95% Adjusted Gamma UCL (Use when n < 40)	12.57						
142												
143					Potential UCL to Use				Use 95% Approximate Gamma UCL			9.42
144												
145					Note: Suggestions regarding the selection of a 95% UCL are provided to help the user to select the most appropriate 95% UCL.							
146					These recommendations are based upon the results of the simulation studies summarized in Singh, Singh, and Iaci (2002)							
147					and Singh and Singh (2003). For additional insight, the user may want to consult a statistician.							
148												
149												
150	Result (barium)											

	A	B	C	D	E	F	G	H	I	J	K	L
151												
152						General Statistics						
153					Number of Valid Observations	8					Number of Distinct Observations	8
154												
155					Raw Statistics						Log-transformed Statistics	
156					Minimum	0.8					Minimum of Log Data	-0.223
157					Maximum	16					Maximum of Log Data	2.773
158					Mean	5.375					Mean of log Data	1.238
159					Geometric Mean	3.45					SD of log Data	1.081
160					Median	4.65						
161					SD	5.03						
162					Std. Error of Mean	1.778						
163					Coefficient of Variation	0.936						
164					Skewness	1.452						
165												
166												
167					Warning: There are only 8 Values in this data							
168					Note: It should be noted that even though bootstrap methods may be performed on this data set,							
169					the resulting calculations may not be reliable enough to draw conclusions							
170												
171					The literature suggests to use bootstrap methods on data sets having more than 10-15 observations.							
172												
173						Relevant UCL Statistics						
174					Normal Distribution Test						Lognormal Distribution Test	
175					Shapiro Wilk Test Statistic	0.854					Shapiro Wilk Test Statistic	0.929
176					Shapiro Wilk Critical Value	0.818					Shapiro Wilk Critical Value	0.818
177					Data appear Normal at 5% Significance Level						Data appear Lognormal at 5% Significance Level	
178												
179					Assuming Normal Distribution						Assuming Lognormal Distribution	
180					95% Student's-t UCL	8.744					95% H-UCL	27.29
181					95% UCLs (Adjusted for Skewness)						95% Chebyshev (MVUE) UCL	15.15
182					95% Adjusted-CLT UCL (Chen-1995)	9.276					97.5% Chebyshev (MVUE) UCL	19.28
183					95% Modified-t UCL (Johnson-1978)	8.897					99% Chebyshev (MVUE) UCL	27.38
184												
185					Gamma Distribution Test						Data Distribution	
186					k star (bias corrected)	0.876					Data appear Normal at 5% Significance Level	
187					Theta Star	6.134						
188					MLE of Mean	5.375						
189					MLE of Standard Deviation	5.742						
190					nu star	14.02						
191					Approximate Chi Square Value (.05)	6.585					Nonparametric Statistics	
192					Adjusted Level of Significance	0.0195					95% CLT UCL	8.3
193					Adjusted Chi Square Value	5.351					95% Jackknife UCL	8.744
194											95% Standard Bootstrap UCL	8.046
195					Anderson-Darling Test Statistic	0.281					95% Bootstrap-t UCL	10.73
196					Anderson-Darling 5% Critical Value	0.732					95% Hall's Bootstrap UCL	19.79
197					Kolmogorov-Smirnov Test Statistic	0.168					95% Percentile Bootstrap UCL	8.275
198					Kolmogorov-Smirnov 5% Critical Value	0.3					95% BCA Bootstrap UCL	9.375
199					Data appear Gamma Distributed at 5% Significance Level						95% Chebyshev(Mean, Sd) UCL	13.13
200											97.5% Chebyshev(Mean, Sd) UCL	16.48

	A	B	C	D	E	F	G	H	I	J	K	L
201				Assuming Gamma Distribution						99% Chebyshev(Mean, Sd) UCL		23.07
202				95% Approximate Gamma UCL (Use when n >= 40)		11.44						
203				95% Adjusted Gamma UCL (Use when n < 40)		14.08						
204												
205				Potential UCL to Use						Use 95% Student's-t UCL		8.744
206												
207				Note: Suggestions regarding the selection of a 95% UCL are provided to help the user to select the most appropriate 95% UCL.								
208				These recommendations are based upon the results of the simulation studies summarized in Singh, Singh, and Iaci (2002)								
209				and Singh and Singh (2003). For additional insight, the user may want to consult a statistician.								
210												
211												
212	Result (chromium)											
213												
214				General Statistics								
215				Number of Valid Observations		8				Number of Distinct Observations		7
216												
217				Raw Statistics						Log-transformed Statistics		
218				Minimum		0.85				Minimum of Log Data		-0.163
219				Maximum		6.3				Maximum of Log Data		1.841
220				Mean		2.581				Mean of log Data		0.726
221				Geometric Mean		2.066				SD of log Data		0.697
222				Median		1.65						
223				SD		1.935						
224				Std. Error of Mean		0.684						
225				Coefficient of Variation		0.75						
226				Skewness		1.271						
227												
228												
229				Warning: There are only 8 Values in this data								
230				Note: It should be noted that even though bootstrap methods may be performed on this data set,								
231				the resulting calculations may not be reliable enough to draw conclusions								
232												
233				The literature suggests to use bootstrap methods on data sets having more than 10-15 observations.								
234												
235				Relevant UCL Statistics								
236				Normal Distribution Test						Lognormal Distribution Test		
237				Shapiro Wilk Test Statistic		0.831				Shapiro Wilk Test Statistic		0.927
238				Shapiro Wilk Critical Value		0.818				Shapiro Wilk Critical Value		0.818
239				Data appear Normal at 5% Significance Level						Data appear Lognormal at 5% Significance Level		
240												
241				Assuming Normal Distribution						Assuming Lognormal Distribution		
242				95% Student's-t UCL		3.878				95% H-UCL		5.404
243				95% UCLs (Adjusted for Skewness)						95% Chebyshev (MVUE) UCL		5.318
244				95% Adjusted-CLT UCL (Chen-1995)		4.035				97.5% Chebyshev (MVUE) UCL		6.519
245				95% Modified-t UCL (Johnson-1978)		3.929				99% Chebyshev (MVUE) UCL		8.878
246												
247				Gamma Distribution Test						Data Distribution		
248				k star (bias corrected)		1.583				Data appear Normal at 5% Significance Level		
249				Theta Star		1.63						
250				MLE of Mean		2.581						

	A	B	C	D	E	F	G	H	I	J	K	L
251					MLE of Standard Deviation	2.051						
252					nu star	25.33						
253					Approximate Chi Square Value (.05)	14.87	**Nonparametric Statistics**					
254					Adjusted Level of Significance	0.0195					95% CLT UCL	3.707
255					Adjusted Chi Square Value	12.88					95% Jackknife UCL	3.878
256											95% Standard Bootstrap UCL	3.626
257					Anderson-Darling Test Statistic	0.464					95% Bootstrap-t UCL	5.626
258					Anderson-Darling 5% Critical Value	0.723					95% Hall's Bootstrap UCL	4.888
259					Kolmogorov-Smirnov Test Statistic	0.237					95% Percentile Bootstrap UCL	3.744
260					Kolmogorov-Smirnov 5% Critical Value	0.297					95% BCA Bootstrap UCL	3.888
261	**Data appear Gamma Distributed at 5% Significance Level**										95% Chebyshev(Mean, Sd) UCL	5.564
262											97.5% Chebyshev(Mean, Sd) UCL	6.854
263			**Assuming Gamma Distribution**								99% Chebyshev(Mean, Sd) UCL	9.39
264				95% Approximate Gamma UCL (Use when n >= 40)		4.398						
265				95% Adjusted Gamma UCL (Use when n < 40)		5.076						
266												
267				**Potential UCL to Use**							Use 95% Student's-t UCL	3.878
268												
269	**Note: Suggestions regarding the selection of a 95% UCL are provided to help the user to select the most appropriate 95% UCL.**											
270	**These recommendations are based upon the results of the simulation studies summarized in Singh, Singh, and Iaci (2002)**											
271	**and Singh and Singh (2003). For additional insight, the user may want to consult a statistician.**											
272												
273												
274	**Result (lead)**											
275												
276					**General Statistics**							
277					Number of Valid Observations	8					Number of Distinct Observations	7
278												
279				**Raw Statistics**			**Log-transformed Statistics**					
280					Minimum	0.64					Minimum of Log Data	-0.446
281					Maximum	9.3					Maximum of Log Data	2.23
282					Mean	3.305					Mean of log Data	0.898
283					Geometric Mean	2.454					SD of log Data	0.835
284					Median	2.25						
285					SD	2.818						
286					Std. Error of Mean	0.996						
287					Coefficient of Variation	0.853						
288					Skewness	1.596						
289												
290												
291	**Warning: There are only 8 Values in this data**											
292	**Note: It should be noted that even though bootstrap methods may be performed on this data set,**											
293	**the resulting calculations may not be reliable enough to draw conclusions**											
294												
295	**The literature suggests to use bootstrap methods on data sets having more than 10-15 observations.**											
296												
297					**Relevant UCL Statistics**							
298				**Normal Distribution Test**			**Lognormal Distribution Test**					
299					Shapiro Wilk Test Statistic	0.841					Shapiro Wilk Test Statistic	0.983
300					Shapiro Wilk Critical Value	0.818					Shapiro Wilk Critical Value	0.818

	A	B	C	D	E	F	G	H	I	J	K	L
301	**Data appear Normal at 5% Significance Level**						**Data appear Lognormal at 5% Significance Level**					
302												
303	**Assuming Normal Distribution**						**Assuming Lognormal Distribution**					
304					95% Student's-t UCL	5.193					95% H-UCL	9.062
305	**95% UCLs (Adjusted for Skewness)**										95% Chebyshev (MVUE) UCL	7.627
306					95% Adjusted-CLT UCL (Chen-1995)	5.545					97.5% Chebyshev (MVUE) UCL	9.499
307					95% Modified-t UCL (Johnson-1978)	5.287					99% Chebyshev (MVUE) UCL	13.18
308												
309	**Gamma Distribution Test**						**Data Distribution**					
310					k star (bias corrected)	1.226	**Data appear Normal at 5% Significance Level**					
311					Theta Star	2.695						
312					MLE of Mean	3.305						
313					MLE of Standard Deviation	2.984						
314					nu star	19.62						
315					Approximate Chi Square Value (.05)	10.57	**Nonparametric Statistics**					
316					Adjusted Level of Significance	0.0195					95% CLT UCL	4.944
317					Adjusted Chi Square Value	8.942					95% Jackknife UCL	5.193
318											95% Standard Bootstrap UCL	4.838
319					Anderson-Darling Test Statistic	0.242					95% Bootstrap-t UCL	6.88
320					Anderson-Darling 5% Critical Value	0.725					95% Hall's Bootstrap UCL	12.08
321					Kolmogorov-Smirnov Test Statistic	0.165					95% Percentile Bootstrap UCL	4.925
322					Kolmogorov-Smirnov 5% Critical Value	0.298					95% BCA Bootstrap UCL	5.418
323	**Data appear Gamma Distributed at 5% Significance Level**										95% Chebyshev(Mean, Sd) UCL	7.649
324											97.5% Chebyshev(Mean, Sd) UCL	9.528
325	**Assuming Gamma Distribution**										99% Chebyshev(Mean, Sd) UCL	13.22
326					95% Approximate Gamma UCL (Use when n >= 40)	6.134						
327					95% Adjusted Gamma UCL (Use when n < 40)	7.252						
328												
329	**Potential UCL to Use**										Use 95% Student's-t UCL	5.193
330												
331	**Note: Suggestions regarding the selection of a 95% UCL are provided to help the user to select the most appropriate 95% UCL.**											
332	**These recommendations are based upon the results of the simulation studies summarized in Singh, Singh, and Iaci (2002)**											
333	**and Singh and Singh (2003). For additional insight, the user may want to consult a statistician.**											
334												
335												
336	**Result (trichloroethene)**											
337												
338	**General Statistics**											
339					Number of Valid Data	8					Number of Detected Data	5
340					Number of Distinct Detected Data	5					Number of Non-Detect Data	3
341											Percent Non-Detects	37.50%
342												
343	**Raw Statistics**						**Log-transformed Statistics**					
344					Minimum Detected	2.9					Minimum Detected	1.065
345					Maximum Detected	38					Maximum Detected	3.638
346					Mean of Detected	17.78					Mean of Detected	2.593
347					SD of Detected	12.9					SD of Detected	0.951
348					Minimum Non-Detect	5					Minimum Non-Detect	1.609
349					Maximum Non-Detect	31					Maximum Non-Detect	3.434
350												

	A	B	C	D	E	F	G	H	I	J	K	L
351	Note: Data have multiple DLs - Use of KM Method is recommended										Number treated as Non-Detect	7
352	For all methods (except KM, DL/2, and ROS Methods),										Number treated as Detected	1
353	Observations < Largest ND are treated as NDs										Single DL Non-Detect Percentage	87.50%
354												
355	**Warning: There are only 5 Detected Values in this data**											
356	**Note: It should be noted that even though bootstrap may be performed on this data set**											
357	**the resulting calculations may not be reliable enough to draw conclusions**											
358												
359	**It is recommended to have 10-15 or more distinct observations for accurate and meaningful results.**											
360												
361												
362	**UCL Statistics**											
363	**Normal Distribution Test with Detected Values Only**						**Lognormal Distribution Test with Detected Values Only**					
364	Shapiro Wilk Test Statistic					0.94	Shapiro Wilk Test Statistic					0.916
365	5% Shapiro Wilk Critical Value					0.762	5% Shapiro Wilk Critical Value					0.762
366	**Data appear Normal at 5% Significance Level**						**Data appear Lognormal at 5% Significance Level**					
367												
368	**Assuming Normal Distribution**						**Assuming Lognormal Distribution**					
369	DL/2 Substitution Method						DL/2 Substitution Method					
370	Mean					13.96	Mean					2.273
371	SD					11.69	SD					0.978
372	95% DL/2 (t) UCL					21.79	95% H-Stat (DL/2) UCL					54.53
373												
374	Maximum Likelihood Estimate(MLE) Method					N/A	Log ROS Method					
375	**MLE method failed to converge properly**						Mean in Log Scale					2.194
376							SD in Log Scale					0.929
377							Mean in Original Scale					12.94
378							SD in Original Scale					11.87
379							95% t UCL					20.89
380							95% Percentile Bootstrap UCL					20.1
381							95% BCA Bootstrap UCL					21.07
382							95% H-UCL					43.34
383												
384	**Gamma Distribution Test with Detected Values Only**						**Data Distribution Test with Detected Values Only**					
385	k star (bias corrected)					0.895	**Data appear Normal at 5% Significance Level**					
386	Theta Star					19.87						
387	nu star					8.947						
388												
389	A-D Test Statistic					0.266	**Nonparametric Statistics**					
390	5% A-D Critical Value					0.685	Kaplan-Meier (KM) Method					
391	K-S Test Statistic					0.685	Mean					13.02
392	5% K-S Critical Value					0.361	SD					11.42
393	**Data appear Gamma Distributed at 5% Significance Level**						SE of Mean					4.633
394							95% KM (t) UCL					21.8
395	**Assuming Gamma Distribution**						95% KM (z) UCL					20.64
396	Gamma ROS Statistics using Extrapolated Data						95% KM (jackknife) UCL					21.72
397	Minimum					0.000001	95% KM (bootstrap t) UCL					22.29
398	Maximum					38	95% KM (BCA) UCL					25
399	Mean					12.23	95% KM (Percentile Bootstrap) UCL					22.25
400	Median					10.46	95% KM (Chebyshev) UCL					33.21

	A	B	C	D	E	F	G	H	I	J	K	L
401					SD	12.7				97.5% KM (Chebyshev) UCL		41.95
402					k star	0.198				99% KM (Chebyshev) UCL		59.12
403					Theta star	61.74						
404					Nu star	3.169	**Potential UCLs to Use**					
405					AppChi2	0.424				95% KM (t) UCL		21.8
406			95% Gamma Approximate UCL (Use when n >= 40)			91.36			95% KM (Percentile Bootstrap) UCL			22.25
407			95% Adjusted Gamma UCL (Use when n < 40)			157.9						
408	**Note: DL/2 is not a recommended method.**											
409												
410	**Note: Suggestions regarding the selection of a 95% UCL are provided to help the user to select the most appropriate 95% UCL.**											
411	**These recommendations are based upon the results of the simulation studies summarized in Singh, Maichle, and Lee (2006).**											
412	**For additional insight, the user may want to consult a statistician.**											
413												

	A	B	C	D	E	F	G	H	I	J	K	L
1				General UCL Statistics for Data Sets with Non-Detects								
2			User Selected Options									
3			From File	C:\Users\ameyers\Documents\Book1.xls.wst								
4			Full Precision	OFF								
5			Confidence Coefficient	95%								
6			Number of Bootstrap Operations	2000								
7												
8												
9	Result (benzo(a)pyrene)											
10												
11						General Statistics						
12						Number of Valid Data	10		Number of Detected Data			5
13						Number of Distinct Detected Data	5		Number of Non-Detect Data			5
14									Percent Non-Detects			50.00%
15												
16				Raw Statistics					Log-transformed Statistics			
17						Minimum Detected	0.011		Minimum Detected			-4.51
18						Maximum Detected	0.82		Maximum Detected			-0.198
19						Mean of Detected	0.283		Mean of Detected			-2.118
20						SD of Detected	0.34		SD of Detected			1.681
21						Minimum Non-Detect	0.069		Minimum Non-Detect			-2.674
22						Maximum Non-Detect	0.078		Maximum Non-Detect			-2.551
23												
24	Note: Data have multiple DLs - Use of KM Method is recommended								Number treated as Non-Detect			7
25	For all methods (except KM, DL/2, and ROS Methods),								Number treated as Detected			3
26	Observations < Largest ND are treated as NDs								Single DL Non-Detect Percentage			70.00%
27												
28						Warning: There are only 5 Detected Values in this data						
29						Note: It should be noted that even though bootstrap may be performed on this data set						
30						the resulting calculations may not be reliable enough to draw conclusions						
31												
32						It is recommended to have 10-15 or more distinct observations for accurate and meaningful results.						
33												
34												
35						UCL Statistics						
36				Normal Distribution Test with Detected Values Only					Lognormal Distribution Test with Detected Values Only			
37						Shapiro Wilk Test Statistic	0.836		Shapiro Wilk Test Statistic			0.957
38						5% Shapiro Wilk Critical Value	0.762		5% Shapiro Wilk Critical Value			0.762
39						Data appear Normal at 5% Significance Level			Data appear Lognormal at 5% Significance Level			
40												
41				Assuming Normal Distribution					Assuming Lognormal Distribution			
42						DL/2 Substitution Method			DL/2 Substitution Method			
43						Mean	0.16		Mean			-2.722
44						SD	0.261		SD			1.289
45						95% DL/2 (t) UCL	0.311		95% H-Stat (DL/2) UCL			0.748
46												
47						Maximum Likelihood Estimate(MLE) Method	N/A		Log ROS Method			
48						MLE yields a negative mean			Mean in Log Scale			-3.359
49									SD in Log Scale			1.777
50									Mean in Original Scale			0.147

	A	B	C	D	E	F	G	H	I	J	K	L
51											SD in Original Scale	0.268
52											95% t UCL	0.303
53											95% Percentile Bootstrap UCL	0.296
54											95% BCA Bootstrap UCL	0.356
55											95% H-UCL	2.996
56												
57				**Gamma Distribution Test with Detected Values Only**					**Data Distribution Test with Detected Values Only**			
58					k star (bias corrected)	0.416			**Data appear Normal at 5% Significance Level**			
59					Theta Star	0.681						
60					nu star	4.155						
61												
62					A-D Test Statistic	0.261			**Nonparametric Statistics**			
63					5% A-D Critical Value	0.701					Kaplan-Meier (KM) Method	
64					K-S Test Statistic	0.701					Mean	0.148
65					5% K-S Critical Value	0.368					SD	0.254
66				**Data appear Gamma Distributed at 5% Significance Level**							SE of Mean	0.0898
67											95% KM (t) UCL	0.313
68				**Assuming Gamma Distribution**							95% KM (z) UCL	0.296
69					Gamma ROS Statistics using Extrapolated Data						95% KM (jackknife) UCL	0.292
70					Minimum	0.000001					95% KM (bootstrap t) UCL	0.962
71					Maximum	0.82					95% KM (BCA) UCL	0.408
72					Mean	0.142					95% KM (Percentile Bootstrap) UCL	0.343
73					Median	0.0055					95% KM (Chebyshev) UCL	0.54
74					SD	0.271					97.5% KM (Chebyshev) UCL	0.709
75					k star	0.158					99% KM (Chebyshev) UCL	1.042
76					Theta star	0.896						
77					Nu star	3.159			**Potential UCLs to Use**			
78					AppChi2	0.421					95% KM (t) UCL	0.313
79					95% Gamma Approximate UCL (Use when n >= 40)	1.062					95% KM (Percentile Bootstrap) UCL	0.343
80					95% Adjusted Gamma UCL (Use when n < 40)	1.541						
81	**Note: DL/2 is not a recommended method.**											
82												
83				**Note: Suggestions regarding the selection of a 95% UCL are provided to help the user to select the most appropriate 95% UCL.**								
84				**These recommendations are based upon the results of the simulation studies summarized in Singh, Maichle, and Lee (2006).**								
85				**For additional insight, the user may want to consult a statistician.**								
86												
87												
88	**Result (benzo(b)fluoranthene)**											
89												
90					**General Statistics**							
91					Number of Valid Data	10					Number of Detected Data	5
92					Number of Distinct Detected Data	5					Number of Non-Detect Data	5
93											Percent Non-Detects	50.00%
94												
95				**Raw Statistics**					**Log-transformed Statistics**			
96					Minimum Detected	0.015					Minimum Detected	-4.2
97					Maximum Detected	1.1					Maximum Detected	0.0953
98					Mean of Detected	0.37					Mean of Detected	-1.819
99					SD of Detected	0.448					SD of Detected	1.65
100					Minimum Non-Detect	0.069					Minimum Non-Detect	-2.674

	A	B	C	D	E	F	G	H	I	J	K	L
101					Maximum Non-Detect	0.078					Maximum Non-Detect	-2.551
102												
103	Note: Data have multiple DLs - Use of KM Method is recommended										Number treated as Non-Detect	6
104	For all methods (except KM, DL/2, and ROS Methods),										Number treated as Detected	4
105	Observations < Largest ND are treated as NDs										Single DL Non-Detect Percentage	60.00%
106												
107	**Warning: There are only 5 Detected Values in this data**											
108	**Note: It should be noted that even though bootstrap may be performed on this data set**											
109	**the resulting calculations may not be reliable enough to draw conclusions**											
110												
111	**It is recommended to have 10-15 or more distinct observations for accurate and meaningful results.**											
112												
113												
114	**UCL Statistics**											
115	**Normal Distribution Test with Detected Values Only**						**Lognormal Distribution Test with Detected Values Only**					
116					Shapiro Wilk Test Statistic	0.834					Shapiro Wilk Test Statistic	0.97
117					5% Shapiro Wilk Critical Value	0.762					5% Shapiro Wilk Critical Value	0.762
118	**Data appear Normal at 5% Significance Level**						**Data appear Lognormal at 5% Significance Level**					
119												
120	**Assuming Normal Distribution**						**Assuming Lognormal Distribution**					
121					DL/2 Substitution Method						DL/2 Substitution Method	
122					Mean	0.203					Mean	-2.572
123					SD	0.347					SD	1.357
124					95% DL/2 (t) UCL	0.404					95% H-Stat (DL/2) UCL	1.107
125												
126					Maximum Likelihood Estimate(MLE) Method	N/A					Log ROS Method	
127	**MLE yields a negative mean**										Mean in Log Scale	-3.116
128											SD in Log Scale	1.809
129											Mean in Original Scale	0.192
130											SD in Original Scale	0.353
131											95% t UCL	0.397
132											95% Percentile Bootstrap UCL	0.38
133											95% BCA Bootstrap UCL	0.481
134											95% H-UCL	4.459
135												
136	**Gamma Distribution Test with Detected Values Only**						**Data Distribution Test with Detected Values Only**					
137					k star (bias corrected)	0.424	**Data appear Normal at 5% Significance Level**					
138					Theta Star	0.873						
139					nu star	4.244						
140												
141					A-D Test Statistic	0.215	**Nonparametric Statistics**					
142					5% A-D Critical Value	0.699					Kaplan-Meier (KM) Method	
143					K-S Test Statistic	0.699					Mean	0.193
144					5% K-S Critical Value	0.367					SD	0.335
145	**Data appear Gamma Distributed at 5% Significance Level**										SE of Mean	0.118
146											95% KM (t) UCL	0.41
147	**Assuming Gamma Distribution**										95% KM (z) UCL	0.387
148					Gamma ROS Statistics using Extrapolated Data						95% KM (jackknife) UCL	0.382
149					Minimum	0.000001					95% KM (bootstrap t) UCL	1.011
150					Maximum	1.1					95% KM (BCA) UCL	0.5

	A	B	C	D	E	F	G	H	I	J	K	L
151					Mean	0.185			95% KM (Percentile Bootstrap) UCL			0.45
152					Median	0.0075			95% KM (Chebyshev) UCL			0.708
153					SD	0.357			97.5% KM (Chebyshev) UCL			0.931
154					k star	0.156			99% KM (Chebyshev) UCL			1.369
155					Theta star	1.184						
156					Nu star	3.128			**Potential UCLs to Use**			
157					AppChi2	0.411			95% KM (t) UCL			0.41
158				95% Gamma Approximate UCL (Use when n >= 40)		1.408			95% KM (Percentile Bootstrap) UCL			0.45
159				95% Adjusted Gamma UCL (Use when n < 40)		2.047						
160	**Note: DL/2 is not a recommended method.**											
161												
162	**Note: Suggestions regarding the selection of a 95% UCL are provided to help the user to select the most appropriate 95% UCL.**											
163	**These recommendations are based upon the results of the simulation studies summarized in Singh, Maichle, and Lee (2006).**											
164	**For additional insight, the user may want to consult a statistician.**											
165												
166												
167	**Result (fluoranthene)**											
168												
169					**General Statistics**							
170					Number of Valid Data	10			Number of Detected Data			5
171					Number of Distinct Detected Data	5			Number of Non-Detect Data			5
172									Percent Non-Detects			50.00%
173												
174					**Raw Statistics**				**Log-transformed Statistics**			
175					Minimum Detected	0.013			Minimum Detected			-4.343
176					Maximum Detected	0.28			Maximum Detected			-1.273
177					Mean of Detected	0.128			Mean of Detected			-2.434
178					SD of Detected	0.0991			SD of Detected			1.161
179					Minimum Non-Detect	0.069			Minimum Non-Detect			-2.674
180					Maximum Non-Detect	0.078			Maximum Non-Detect			-2.551
181												
182	Note: Data have multiple DLs - Use of KM Method is recommended								Number treated as Non-Detect			6
183	For all methods (except KM, DL/2, and ROS Methods),								Number treated as Detected			4
184	Observations < Largest ND are treated as NDs								Single DL Non-Detect Percentage			60.00%
185												
186	**Warning: There are only 5 Detected Values in this data**											
187	**Note: It should be noted that even though bootstrap may be performed on this data set**											
188	**the resulting calculations may not be reliable enough to draw conclusions**											
189												
190	**It is recommended to have 10-15 or more distinct observations for accurate and meaningful results.**											
191												
192												
193					**UCL Statistics**							
194					**Normal Distribution Test with Detected Values Only**				**Lognormal Distribution Test with Detected Values Only**			
195					Shapiro Wilk Test Statistic	0.964			Shapiro Wilk Test Statistic			0.894
196					5% Shapiro Wilk Critical Value	0.762			5% Shapiro Wilk Critical Value			0.762
197					**Data appear Normal at 5% Significance Level**				**Data appear Lognormal at 5% Significance Level**			
198												
199					**Assuming Normal Distribution**				**Assuming Lognormal Distribution**			
200					DL/2 Substitution Method				DL/2 Substitution Method			

	A	B	C	D	E	F	G	H	I	J	K	L
201					Mean	0.0822					Mean	-2.88
202					SD	0.0821					SD	0.906
203					95% DL/2 (t) UCL	0.13					95% H-Stat (DL/2) UCL	0.204
204												
205					Maximum Likelihood Estimate(MLE) Method						Log ROS Method	
206					Mean	0.0435					Mean in Log Scale	-3.353
207					SD	0.121					SD in Log Scale	1.278
208					95% MLE (t) UCL	0.114					Mean in Original Scale	0.0718
209					95% MLE (Tiku) UCL	0.143					SD in Original Scale	0.0891
210											95% t UCL	0.123
211											95% Percentile Bootstrap UCL	0.117
212											95% BCA Bootstrap UCL	0.134
213											95% H UCL	0.383
214												
215					**Gamma Distribution Test with Detected Values Only**						**Data Distribution Test with Detected Values Only**	
216					k star (bias corrected)	0.715					**Data appear Normal at 5% Significance Level**	
217					Theta Star	0.18						
218					nu star	7.15						
219												
220					A-D Test Statistic	0.257					**Nonparametric Statistics**	
221					5% A-D Critical Value	0.687					Kaplan-Meier (KM) Method	
222					K-S Test Statistic	0.687					Mean	0.0707
223					5% K-S Critical Value	0.362					SD	0.0852
224					**Data appear Gamma Distributed at 5% Significance Level**						SE of Mean	0.0301
225											95% KM (t) UCL	0.126
226					**Assuming Gamma Distribution**						95% KM (z) UCL	0.12
227					Gamma ROS Statistics using Extrapolated Data						95% KM (jackknife) UCL	0.126
228					Minimum	0.000001					95% KM (bootstrap t) UCL	0.129
229					Maximum	0.28					95% KM (BCA) UCL	0.171
230					Mean	0.0671					95% KM (Percentile Bootstrap) UCL	0.158
231					Median	0.0146					95% KM (Chebyshev) UCL	0.202
232					SD	0.0925					97.5% KM (Chebyshev) UCL	0.259
233					k star	0.213					99% KM (Chebyshev) UCL	0.37
234					Theta star	0.316						
235					Nu star	4.253					**Potential UCLs to Use**	
236					AppChi2	0.824					95% KM (t) UCL	0.126
237					95% Gamma Approximate UCL (Use when n >= 40)	0.346					95% KM (Percentile Bootstrap) UCL	0.158
238					95% Adjusted Gamma UCL (Use when n < 40)	0.476						
239	**Note: DL/2 is not a recommended method.**											
240												
241					**Note: Suggestions regarding the selection of a 95% UCL are provided to help the user to select the most appropriate 95% UCL.**							
242					**These recommendations are based upon the results of the simulation studies summarized in Singh, Maichle, and Lee (2006).**							
243					**For additional insight, the user may want to consult a statistician.**							
244												
245												
246	**Result (pyrene)**											
247												
248					**General Statistics**							
249					Number of Valid Data	10					Number of Detected Data	5
250					Number of Distinct Detected Data	4					Number of Non-Detect Data	5

	A	B	C	D	E	F	G	H	I	J	K	L
251											Percent Non-Detects	50.00%
252												
253					**Raw Statistics**						**Log-transformed Statistics**	
254					Minimum Detected	0.019					Minimum Detected	-3.963
255					Maximum Detected	0.64					Maximum Detected	-0.446
256					Mean of Detected	0.258					Mean of Detected	-1.878
257					SD of Detected	0.245					SD of Detected	1.332
258					Minimum Non-Detect	0.069					Minimum Non-Detect	-2.674
259					Maximum Non-Detect	0.078					Maximum Non-Detect	-2.551
260												
261	Note: Data have multiple DLs - Use of KM Method is recommended										Number treated as Non-Detect	6
262	For all methods (except KM, DL/2, and ROS Methods),										Number treated as Detected	4
263	Observations < Largest ND are treated as NDs										Single DL Non-Detect Percentage	60.00%
264												
265	**Warning: There are only 4 Distinct Detected Values in this data**											
266	**Note: It should be noted that even though bootstrap may be performed on this data set**											
267	**the resulting calculations may not be reliable enough to draw conclusions**											
268												
269	**It is recommended to have 10-15 or more distinct observations for accurate and meaningful results.**											
270												
271												
272					**UCL Statistics**							
273					**Normal Distribution Test with Detected Values Only**						**Lognormal Distribution Test with Detected Values Only**	
274					Shapiro Wilk Test Statistic	0.897					Shapiro Wilk Test Statistic	0.922
275					5% Shapiro Wilk Critical Value	0.762					5% Shapiro Wilk Critical Value	0.762
276					**Data appear Normal at 5% Significance Level**						**Data appear Lognormal at 5% Significance Level**	
277												
278					**Assuming Normal Distribution**						**Assuming Lognormal Distribution**	
279					DL/2 Substitution Method						DL/2 Substitution Method	
280					Mean	0.147					Mean	-2.602
281					SD	0.201					SD	1.171
282					95% DL/2 (t) UCL	0.263					95% H-Stat (DL/2) UCL	0.569
283												
284					Maximum Likelihood Estimate(MLE) Method	N/A					Log ROS Method	
285					**MLE yields a negative mean**						Mean in Log Scale	-2.93
286											SD in Log Scale	1.465
287											Mean in Original Scale	0.139
288											SD in Original Scale	0.206
289											95% t UCL	0.258
290											95% Percentile Bootstrap UCL	0.249
291											95% BCA Bootstrap UCL	0.29
292											95% H-UCL	1.171
293												
294					**Gamma Distribution Test with Detected Values Only**						**Data Distribution Test with Detected Values Only**	
295					k star (bias corrected)	0.571					**Data appear Normal at 5% Significance Level**	
296					Theta Star	0.452						
297					nu star	5.705						
298												
299					A-D Test Statistic	0.255					**Nonparametric Statistics**	
300					5% A-D Critical Value	0.69					Kaplan-Meier (KM) Method	

	A	B	C	D	E	F	G	H	I	J	K	L
301					K-S Test Statistic	0.69					Mean	0.138
302					5% K-S Critical Value	0.364					SD	0.195
303	**Data appear Gamma Distributed at 5% Significance Level**										SE of Mean	0.0691
304											95% KM (t) UCL	0.265
305			**Assuming Gamma Distribution**								95% KM (z) UCL	0.252
306					Gamma ROS Statistics using Extrapolated Data						95% KM (jackknife) UCL	0.257
307					Minimum	0.000001					95% KM (bootstrap t) UCL	0.372
308					Maximum	0.64					95% KM (BCA) UCL	0.408
309					Mean	0.129					95% KM (Percentile Bootstrap) UCL	0.303
310					Median	0.0095					95% KM (Chebyshev) UCL	0.44
311					SD	0.212					97.5% KM (Chebyshev) UCL	0.57
312					k star	0.161					99% KM (Chebyshev) UCL	0.826
313					Theta star	0.801						
314					Nu star	3.218			**Potential UCLs to Use**			
315					AppChi2	0.44					95% KM (t) UCL	0.265
316					95% Gamma Approximate UCL (Use when n >= 40)	0.943					95% KM (Percentile Bootstrap) UCL	0.303
317					95% Adjusted Gamma UCL (Use when n < 40)	1.365						
318	**Note: DL/2 is not a recommended method.**											
319												
320	**Note: Suggestions regarding the selection of a 95% UCL are provided to help the user to select the most appropriate 95% UCL.**											
321	**These recommendations are based upon the results of the simulation studies summarized in Singh, Maichle, and Lee (2006).**											
322	**For additional insight, the user may want to consult a statistician.**											
323												

	A	B	C	D	E	F	G	H	I	J	K	L
1				General UCL Statistics for Data Sets with Non-Detects								
2			User Selected Options									
3			From File	WorkSheet.wst								
4			Full Precision	OFF								
5			Confidence Coefficient	95%								
6			Number of Bootstrap Operations	2000								
7												
8												
9	Result (acenaphthylene)											
10												
11						General Statistics						
12						Number of Valid Data	28		Number of Detected Data			8
13						Number of Distinct Detected Data	6		Number of Non-Detect Data			20
14									Percent Non-Detects			71.43%
15												
16				Raw Statistics					Log-transformed Statistics			
17						Minimum Detected	0.029		Minimum Detected			-3.54
18						Maximum Detected	0.4		Maximum Detected			-0.916
19						Mean of Detected	0.137		Mean of Detected			-2.376
20						SD of Detected	0.127		SD of Detected			0.966
21						Minimum Non-Detect	0.069		Minimum Non-Detect			-2.674
22						Maximum Non-Detect	0.15		Maximum Non-Detect			-1.897
23												
24	Note: Data have multiple DLs - Use of KM Method is recommended								Number treated as Non-Detect			25
25	For all methods (except KM, DL/2, and ROS Methods),								Number treated as Detected			3
26	Observations < Largest ND are treated as NDs								Single DL Non-Detect Percentage			89.29%
27												
28						Warning: There are only 8 Detected Values in this data						
29						Note: It should be noted that even though bootstrap may be performed on this data set						
30						the resulting calculations may not be reliable enough to draw conclusions						
31												
32						It is recommended to have 10-15 or more distinct observations for accurate and meaningful results.						
33												
34												
35						UCL Statistics						
36				Normal Distribution Test with Detected Values Only					Lognormal Distribution Test with Detected Values Only			
37						Shapiro Wilk Test Statistic	0.837		Shapiro Wilk Test Statistic			0.931
38						5% Shapiro Wilk Critical Value	0.818		5% Shapiro Wilk Critical Value			0.818
39						Data appear Normal at 5% Significance Level			Data appear Lognormal at 5% Significance Level			
40												
41				Assuming Normal Distribution					Assuming Lognormal Distribution			
42						DL/2 Substitution Method			DL/2 Substitution Method			
43						Mean	0.0681		Mean			-2.99
44						SD	0.0791		SD			0.658
45						95% DL/2 (t) UCL	0.0935		95% H-Stat (DL/2) UCL			0.0813
46												
47						Maximum Likelihood Estimate(MLE) Method	N/A		Log ROS Method			
48						MLE method failed to converge properly			Mean in Log Scale			-2.93
49									SD in Log Scale			0.68
50									Mean in Original Scale			0.0717

	A	B	C	D	E	F	G	H	I	J	K	L
51											SD in Original Scale	0.0783
52											95% t UCL	0.0969
53											95% Percentile Bootstrap UCL	0.0969
54											95% BCA Bootstrap UCL	0.105
55											95% H-UCL	0.0886
56												
57				Gamma Distribution Test with Detected Values Only					Data Distribution Test with Detected Values Only			
58					k star (bias corrected)	0.977			Data appear Normal at 5% Significance Level			
59					Theta Star	0.14						
60					nu star	15.64						
61												
62					A-D Test Statistic	0.326			Nonparametric Statistics			
63					5% A-D Critical Value	0.729					Kaplan-Meier (KM) Method	
64					K-S Test Statistic	0.729					Mean	0.0708
65					5% K-S Critical Value	0.299					SD	0.0774
66				Data appear Gamma Distributed at 5% Significance Level							SE of Mean	0.017
67											95% KM (t) UCL	0.0997
68				Assuming Gamma Distribution							95% KM (z) UCL	0.0987
69					Gamma ROS Statistics using Extrapolated Data						95% KM (jackknife) UCL	0.0999
70					Minimum	0.000001					95% KM (bootstrap t) UCL	0.116
71					Maximum	0.4					95% KM (BCA) UCL	0.0984
72					Mean	0.0799					95% KM (Percentile Bootstrap) UCL	0.103
73					Median	0.0549					95% KM (Chebyshev) UCL	0.145
74					SD	0.084					97.5% KM (Chebyshev) UCL	0.177
75					k star	0.501					99% KM (Chebyshev) UCL	0.24
76					Theta star	0.159						
77					Nu star	28.06			Potential UCLs to Use			
78					AppChi2	16.98					95% KM (t) UCL	0.0997
79					95% Gamma Approximate UCL (Use when n >= 40)	0.132					95% KM (Percentile Bootstrap) UCL	0.103
80					95% Adjusted Gamma UCL (Use when n < 40)	0.136						
81	Note: DL/2 is not a recommended method.											
82												
83	Note: Suggestions regarding the selection of a 95% UCL are provided to help the user to select the most appropriate 95% UCL.											
84	These recommendations are based upon the results of the simulation studies summarized in Singh, Maichle, and Lee (2006).											
85	For additional insight, the user may want to consult a statistician.											
86												
87												
88	Result (acetone)											
89												
90					General Statistics							
91					Number of Valid Data	28					Number of Detected Data	18
92					Number of Distinct Detected Data	15					Number of Non-Detect Data	10
93											Percent Non-Detects	35.71%
94												
95				Raw Statistics					Log-transformed Statistics			
96					Minimum Detected	0.012					Minimum Detected	-4.423
97					Maximum Detected	0.11					Maximum Detected	-2.207
98					Mean of Detected	0.0443					Mean of Detected	-3.335
99					SD of Detected	0.0278					SD of Detected	0.712
100					Minimum Non-Detect	0.015					Minimum Non-Detect	-4.2

	A	B	C	D	E	F	G	H	I	J	K	L
101					Maximum Non-Detect	0.072					Maximum Non-Detect	-2.631
102												
103	Note: Data have multiple DLs - Use of KM Method is recommended										Number treated as Non-Detect	26
104	For all methods (except KM, DL/2, and ROS Methods),										Number treated as Detected	2
105	Observations < Largest ND are treated as NDs										Single DL Non-Detect Percentage	92.86%
106												
107					**UCL Statistics**							
108				**Normal Distribution Test with Detected Values Only**						**Lognormal Distribution Test with Detected Values Only**		
109					Shapiro Wilk Test Statistic	0.886					Shapiro Wilk Test Statistic	0.891
110					5% Shapiro Wilk Critical Value	0.897					5% Shapiro Wilk Critical Value	0.897
111				**Data not Normal at 5% Significance Level**						**Data not Lognormal at 5% Significance Level**		
112												
113				**Assuming Normal Distribution**						**Assuming Lognormal Distribution**		
114					DL/2 Substitution Method						DL/2 Substitution Method	
115					Mean	0.0353					Mean	-3.615
116					SD	0.026					SD	0.769
117					95% DL/2 (t) UCL	0.0437					95% H-Stat (DL/2) UCL	0.05
118												
119					Maximum Likelihood Estimate(MLE) Method	N/A					Log ROS Method	
120				**MLE method failed to converge properly**							Mean in Log Scale	-3.589
121											SD in Log Scale	0.677
122											Mean in Original Scale	0.0349
123											SD in Original Scale	0.0256
124											95% t UCL	0.0431
125											95% Percentile Bootstrap UCL	0.0427
126											95% BCA Bootstrap UCL	0.0443
127											95% H-UCL	0.0457
128												
129				**Gamma Distribution Test with Detected Values Only**						**Data Distribution Test with Detected Values Only**		
130					k star (bias corrected)	2.077				**Data Follow Appr. Gamma Distribution at 5% Significance Level**		
131					Theta Star	0.0213						
132					nu star	74.76						
133												
134					A-D Test Statistic	0.899				**Nonparametric Statistics**		
135					5% A-D Critical Value	0.75					Kaplan-Meier (KM) Method	
136					K-S Test Statistic	0.75					Mean	0.035
137					5% K-S Critical Value	0.206					SD	0.0259
138				**Data follow Appr. Gamma Distribution at 5% Significance Level**							SE of Mean	0.0052
139											95% KM (t) UCL	0.0439
140				**Assuming Gamma Distribution**							95% KM (z) UCL	0.0436
141					Gamma ROS Statistics using Extrapolated Data						95% KM (jackknife) UCL	0.0438
142					Minimum	0.000001					95% KM (bootstrap t) UCL	0.0454
143					Maximum	0.11					95% KM (BCA) UCL	0.0433
144					Mean	0.0349					95% KM (Percentile Bootstrap) UCL	0.0436
145					Median	0.0241					95% KM (Chebyshev) UCL	0.0577
146					SD	0.0262					97.5% KM (Chebyshev) UCL	0.0675
147					k star	0.932					99% KM (Chebyshev) UCL	0.0868
148					Theta star	0.0375						
149					Nu star	52.16				**Potential UCLs to Use**		
150					AppChi2	36.58					95% KM (Percentile Bootstrap) UCL	0.0436

	A	B	C	D	E	F	G	H	I	J	K	L
151				95% Gamma Approximate UCL (Use when n >= 40)		0.0498						
152				95% Adjusted Gamma UCL (Use when n < 40)		0.0509						
153	Note: DL/2 is not a recommended method.											
154												
155	Note: Suggestions regarding the selection of a 95% UCL are provided to help the user to select the most appropriate 95% UCL.											
156	These recommendations are based upon the results of the simulation studies summarized in Singh, Maichle, and Lee (2006).											
157	For additional insight, the user may want to consult a statistician.											
158												
159												
160	Result (anthracene)											
161												
162	General Statistics											
163				Number of Valid Data		28				Number of Detected Data		7
164				Number of Distinct Detected Data		7				Number of Non-Detect Data		21
165										Percent Non-Detects		75.00%
166												
167	Raw Statistics						Log-transformed Statistics					
168				Minimum Detected		0.015				Minimum Detected		-4.2
169				Maximum Detected		0.25				Maximum Detected		-1.386
170				Mean of Detected		0.08				Mean of Detected		-2.879
171				SD of Detected		0.0794				SD of Detected		0.9
172				Minimum Non-Detect		0.069				Minimum Non-Detect		-2.674
173				Maximum Non-Detect		0.15				Maximum Non-Detect		-1.897
174												
175	Note: Data have multiple DLs - Use of KM Method is recommended									Number treated as Non-Detect		27
176	For all methods (except KM, DL/2, and ROS Methods),									Number treated as Detected		1
177	Observations < Largest ND are treated as NDs									Single DL Non-Detect Percentage		96.43%
178												
179	Warning: There are only 7 Detected Values in this data											
180	Note: It should be noted that even though bootstrap may be performed on this data set											
181	the resulting calculations may not be reliable enough to draw conclusions											
182												
183	It is recommended to have 10-15 or more distinct observations for accurate and meaningful results.											
184												
185												
186	UCL Statistics											
187	Normal Distribution Test with Detected Values Only						Lognormal Distribution Test with Detected Values Only					
188				Shapiro Wilk Test Statistic		0.756				Shapiro Wilk Test Statistic		0.971
189				5% Shapiro Wilk Critical Value		0.803				5% Shapiro Wilk Critical Value		0.803
190	Data not Normal at 5% Significance Level						Data appear Lognormal at 5% Significance Level					
191												
192	Assuming Normal Distribution						Assuming Lognormal Distribution					
193				DL/2 Substitution Method						DL/2 Substitution Method		
194				Mean		0.0502				Mean		-3.149
195				SD		0.0425				SD		0.491
196				95% DL/2 (t) UCL		0.0639				95% H-Stat (DL/2) UCL		0.0581
197												
198				Maximum Likelihood Estimate(MLE) Method		N/A				Log ROS Method		
199	MLE method failed to converge properly									Mean in Log Scale		-3.33
200										SD in Log Scale		0.586

	A	B	C	D	E	F	G	H	I	J	K	L
201											Mean in Original Scale	0.0445
202											SD in Original Scale	0.044
203											95% t UCL	0.0587
204											95% Percentile Bootstrap UCL	0.0602
205											95% BCA Bootstrap UCL	0.0672
206											95% H-UCL	0.0533
207												
208				**Gamma Distribution Test with Detected Values Only**						**Data Distribution Test with Detected Values Only**		
209					k star (bias corrected)	0.988				**Data appear Gamma Distributed at 5% Significance Level**		
210					Theta Star	0.0809						
211					nu star	13.84						
212												
213					A-D Test Statistic	0.335				**Nonparametric Statistics**		
214					5% A-D Critical Value	0.72					Kaplan-Meier (KM) Method	
215					K-S Test Statistic	0.72					Mean	0.0473
216					5% K-S Critical Value	0.317					SD	0.0446
217				**Data appear Gamma Distributed at 5% Significance Level**							SE of Mean	0.0113
218											95% KM (t) UCL	0.0665
219				**Assuming Gamma Distribution**							95% KM (z) UCL	0.0658
220					Gamma ROS Statistics using Extrapolated Data						95% KM (jackknife) UCL	0.067
221					Minimum	0.00318					95% KM (bootstrap t) UCL	0.0761
222					Maximum	0.25					95% KM (BCA) UCL	0.0701
223					Mean	0.0512					95% KM (Percentile Bootstrap) UCL	0.0709
224					Median	0.0443					95% KM (Chebyshev) UCL	0.0964
225					SD	0.0485					97.5% KM (Chebyshev) UCL	0.118
226					k star	1.077					99% KM (Chebyshev) UCL	0.159
227					Theta star	0.0475						
228					Nu star	60.33				**Potential UCLs to Use**		
229					AppChi2	43.47					95% KM (t) UCL	0.0665
230					95% Gamma Approximate UCL (Use when n >= 40)	0.0711						
231					95% Adjusted Gamma UCL (Use when n < 40)	0.0726						
232	**Note: DL/2 is not a recommended method.**											
233												
234				**Note: Suggestions regarding the selection of a 95% UCL are provided to help the user to select the most appropriate 95% UCL.**								
235				**These recommendations are based upon the results of the simulation studies summarized in Singh, Maichle, and Lee (2006).**								
236				**For additional insight, the user may want to consult a statistician.**								
237												
238												
239	**Result (arsenic)**											
240												
241					**General Statistics**							
242					Number of Valid Data	16					Number of Detected Data	8
243					Number of Distinct Detected Data	7					Number of Non-Detect Data	8
244											Percent Non-Detects	50.00%
245												
246				**Raw Statistics**						**Log-transformed Statistics**		
247					Minimum Detected	0.3					Minimum Detected	-1.204
248					Maximum Detected	0.7					Maximum Detected	-0.357
249					Mean of Detected	0.496					Mean of Detected	-0.738
250					SD of Detected	0.136					SD of Detected	0.3

	A	B	C	D	E	F	G	H	I	J	K	L
251					Minimum Non-Detect	0.5					Minimum Non-Detect	-0.693
252					Maximum Non-Detect	0.57					Maximum Non-Detect	-0.562
253												
254	Note: Data have multiple DLs - Use of KM Method is recommended										Number treated as Non-Detect	14
255	For all methods (except KM, DL/2, and ROS Methods),										Number treated as Detected	2
256	Observations < Largest ND are treated as NDs										Single DL Non-Detect Percentage	87.50%
257												
258	**Warning: There are only 8 Detected Values in this data**											
259	**Note: It should be noted that even though bootstrap may be performed on this data set**											
260	**the resulting calculations may not be reliable enough to draw conclusions**											
261												
262	**It is recommended to have 10-15 or more distinct observations for accurate and meaningful results.**											
263												
264												
265	**UCL Statistics**											
266	**Normal Distribution Test with Detected Values Only**						**Lognormal Distribution Test with Detected Values Only**					
267					Shapiro Wilk Test Statistic	0.911					Shapiro Wilk Test Statistic	0.866
268					5% Shapiro Wilk Critical Value	0.818					5% Shapiro Wilk Critical Value	0.818
269	**Data appear Normal at 5% Significance Level**						**Data appear Lognormal at 5% Significance Level**					
270												
271	**Assuming Normal Distribution**						**Assuming Lognormal Distribution**					
272					DL/2 Substitution Method						DL/2 Substitution Method	
273					Mean	0.38					Mean	-1.035
274					SD	0.152					SD	0.371
275					95% DL/2 (t) UCL	0.447					95% H-Stat (DL/2) UCL	0.458
276												
277					Maximum Likelihood Estimate(MLE) Method	N/A					Log ROS Method	
278	**MLE method failed to converge properly**										Mean in Log Scale	-0.847
279											SD in Log Scale	0.243
280											Mean in Original Scale	0.441
281											SD in Original Scale	0.111
282											95% t UCL	0.49
283											95% Percentile Bootstrap UCL	0.486
284											95% BCA Bootstrap UCL	0.493
285											95% H-UCL	0.495
286												
287	**Gamma Distribution Test with Detected Values Only**						**Data Distribution Test with Detected Values Only**					
288					k star (bias corrected)	8.646	**Data appear Normal at 5% Significance Level**					
289					Theta Star	0.0574						
290					nu star	138.3						
291												
292					A-D Test Statistic	0.553	**Nonparametric Statistics**					
293					5% A-D Critical Value	0.715					Kaplan-Meier (KM) Method	
294					K-S Test Statistic	0.715					Mean	0.447
295					5% K-S Critical Value	0.294					SD	0.121
296	**Data appear Gamma Distributed at 5% Significance Level**										SE of Mean	0.0437
297											95% KM (t) UCL	0.524
298	**Assuming Gamma Distribution**										95% KM (z) UCL	0.519
299					Gamma ROS Statistics using Extrapolated Data						95% KM (jackknife) UCL	0.532
300					Minimum	0.3					95% KM (bootstrap t) UCL	0.532

	A	B	C	D	E	F	G	H	I	J	K	L
301					Maximum	0.7					95% KM (BCA) UCL	0.526
302					Mean	0.454					95% KM (Percentile Bootstrap) UCL	0.526
303					Median	0.469					95% KM (Chebyshev) UCL	0.638
304					SD	0.111					97.5% KM (Chebyshev) UCL	0.72
305					k star	14.78					99% KM (Chebyshev) UCL	0.882
306					Theta star	0.0307						
307					Nu star	473			**Potential UCLs to Use**			
308					AppChi2	423.5					95% KM (t) UCL	0.524
309				95% Gamma Approximate UCL (Use when n >= 40)		0.507					95% KM (Percentile Bootstrap) UCL	0.526
310				95% Adjusted Gamma UCL (Use when n < 40)		0.513						
311	**Note: DL/2 is not a recommended method.**											
312												
313	**Note: Suggestions regarding the selection of a 95% UCL are provided to help the user to select the most appropriate 95% UCL.**											
314	**These recommendations are based upon the results of the simulation studies summarized in Singh, Maichle, and Lee (2006).**											
315	**For additional insight, the user may want to consult a statistician.**											
316												
317												
318	**Result (barium)**											
319												
320	**General Statistics**											
321	Number of Valid Observations					16	Number of Distinct Observations					16
322												
323	**Raw Statistics**						**Log-transformed Statistics**					
324	Minimum					1.1	Minimum of Log Data					0.0953
325	Maximum					19	Maximum of Log Data					2.944
326	Mean					7.294	Mean of log Data					1.73
327	Geometric Mean					5.643	SD of log Data					0.779
328	Median					6.45						
329	SD					5.261						
330	Std. Error of Mean					1.315						
331	Coefficient of Variation					0.721						
332	Skewness					1.2						
333												
334	**Relevant UCL Statistics**											
335	**Normal Distribution Test**						**Lognormal Distribution Test**					
336	Shapiro Wilk Test Statistic					0.87	Shapiro Wilk Test Statistic					0.961
337	Shapiro Wilk Critical Value					0.887	Shapiro Wilk Critical Value					0.887
338	**Data not Normal at 5% Significance Level**						**Data appear Lognormal at 5% Significance Level**					
339												
340	**Assuming Normal Distribution**						**Assuming Lognormal Distribution**					
341	95% Student's-t UCL					9.599	95% H-UCL					12.35
342	**95% UCLs (Adjusted for Skewness)**						95% Chebyshev (MVUE) UCL					14.24
343	95% Adjusted-CLT UCL (Chen-1995)					9.879	97.5% Chebyshev (MVUE) UCL					17.17
344	95% Modified-t UCL (Johnson-1978)					9.665	99% Chebyshev (MVUE) UCL					22.93
345												
346	**Gamma Distribution Test**						**Data Distribution**					
347	k star (bias corrected)					1.748	**Data appear Gamma Distributed at 5% Significance Level**					
348	Theta Star					4.173						
349	MLE of Mean					7.294						
350	MLE of Standard Deviation					5.517						

	A	B	C	D	E	F	G	H	I	J	K	L
351					nu star	55.94						
352					Approximate Chi Square Value (.05)	39.75	**Nonparametric Statistics**					
353					Adjusted Level of Significance	0.0335					95% CLT UCL	9.457
354					Adjusted Chi Square Value	38.2					95% Jackknife UCL	9.599
355											95% Standard Bootstrap UCL	9.361
356					Anderson-Darling Test Statistic	0.295					95% Bootstrap-t UCL	10.39
357					Anderson-Darling 5% Critical Value	0.75					95% Hall's Bootstrap UCL	11.73
358					Kolmogorov-Smirnov Test Statistic	0.136					95% Percentile Bootstrap UCL	9.475
359					Kolmogorov-Smirnov 5% Critical Value	0.218					95% BCA Bootstrap UCL	9.981
360	**Data appear Gamma Distributed at 5% Significance Level**										95% Chebyshev(Mean, Sd) UCL	13.03
361											97.5% Chebyshev(Mean, Sd) UCL	15.51
362			**Assuming Gamma Distribution**								99% Chebyshev(Mean, Sd) UCL	20.38
363			95% Approximate Gamma UCL (Use when n >= 40)			10.26						
364			95% Adjusted Gamma UCL (Use when n < 40)			10.68						
365												
366			**Potential UCL to Use**								Use 95% Approximate Gamma UCL	10.26
367												
368	**Note: Suggestions regarding the selection of a 95% UCL are provided to help the user to select the most appropriate 95% UCL.**											
369	**These recommendations are based upon the results of the simulation studies summarized in Singh, Singh, and Iaci (2002)**											
370	**and Singh and Singh (2003). For additional insight, the user may want to consult a statistician.**											
371												
372												
373	**Result (benz(a)anthracene)**											
374												
375					**General Statistics**							
376					Number of Valid Data	28					Number of Detected Data	8
377					Number of Distinct Detected Data	8					Number of Non-Detect Data	20
378											Percent Non-Detects	71.43%
379												
380			**Raw Statistics**				**Log-transformed Statistics**					
381					Minimum Detected	0.038					Minimum Detected	-3.27
382					Maximum Detected	0.5					Maximum Detected	-0.693
383					Mean of Detected	0.219					Mean of Detected	-1.907
384					SD of Detected	0.182					SD of Detected	1.001
385					Minimum Non-Detect	0.069					Minimum Non-Detect	-2.674
386					Maximum Non-Detect	0.15					Maximum Non-Detect	-1.897
387												
388	Note: Data have multiple DLs - Use of KM Method is recommended										Number treated as Non-Detect	24
389	For all methods (except KM, DL/2, and ROS Methods),										Number treated as Detected	4
390	Observations < Largest ND are treated as NDs										Single DL Non-Detect Percentage	85.71%
391												
392	**Warning: There are only 8 Detected Values in this data**											
393	**Note: It should be noted that even though bootstrap may be performed on this data set**											
394	**the resulting calculations may not be reliable enough to draw conclusions**											
395												
396	**It is recommended to have 10-15 or more distinct observations for accurate and meaningful results.**											
397												
398												
399					**UCL Statistics**							
400			**Normal Distribution Test with Detected Values Only**				**Lognormal Distribution Test with Detected Values Only**					

	A	B	C	D	E	F	G	H	I	J	K	L
401					Shapiro Wilk Test Statistic	0.87					Shapiro Wilk Test Statistic	0.899
402					5% Shapiro Wilk Critical Value	0.818					5% Shapiro Wilk Critical Value	0.818
403					**Data appear Normal at 5% Significance Level**						**Data appear Lognormal at 5% Significance Level**	
404												
405					**Assuming Normal Distribution**						**Assuming Lognormal Distribution**	
406					DL/2 Substitution Method						DL/2 Substitution Method	
407					Mean	0.0916					Mean	-2.856
408					SD	0.124					SD	0.818
409					95% DL/2 (t) UCL	0.132					95% H-Stat (DL/2) UCL	0.114
410												
411					Maximum Likelihood Estimate(MLE) Method	N/A					Log ROS Method	
412					**MLE yields a negative mean**						Mean in Log Scale	-2.739
413											SD in Log Scale	0.813
414											Mean in Original Scale	0.0983
415											SD in Original Scale	0.122
416											95% t UCL	0.138
417											95% Percentile Bootstrap UCL	0.14
418											95% BCA Bootstrap UCL	0.149
419											95% H-UCL	0.128
420												
421					**Gamma Distribution Test with Detected Values Only**						**Data Distribution Test with Detected Values Only**	
422					k star (bias corrected)	0.975					**Data appear Normal at 5% Significance Level**	
423					Theta Star	0.225						
424					nu star	15.6						
425												
426					A-D Test Statistic	0.463					**Nonparametric Statistics**	
427					5% A-D Critical Value	0.729					Kaplan-Meier (KM) Method	
428					K-S Test Statistic	0.729					Mean	0.0996
429					5% K-S Critical Value	0.299					SD	0.119
430					**Data appear Gamma Distributed at 5% Significance Level**						SE of Mean	0.0247
431											95% KM (t) UCL	0.142
432					**Assuming Gamma Distribution**						95% KM (z) UCL	0.14
433					Gamma ROS Statistics using Extrapolated Data						95% KM (jackknife) UCL	0.142
434					Minimum	0.000001					95% KM (bootstrap t) UCL	0.154
435					Maximum	0.5					95% KM (BCA) UCL	0.162
436					Mean	0.102					95% KM (Percentile Bootstrap) UCL	0.146
437					Median	0.0636					95% KM (Chebyshev) UCL	0.207
438					SD	0.129					97.5% KM (Chebyshev) UCL	0.254
439					k star	0.219					99% KM (Chebyshev) UCL	0.345
440					Theta star	0.465						
441					Nu star	12.27					**Potential UCLs to Use**	
442					AppChi2	5.408					95% KM (t) UCL	0.142
443					95% Gamma Approximate UCL (Use when n >= 40)	0.231					95% KM (Percentile Bootstrap) UCL	0.146
444					95% Adjusted Gamma UCL (Use when n < 40)	0.244						
445	**Note: DL/2 is not a recommended method.**											
446												
447	**Note: Suggestions regarding the selection of a 95% UCL are provided to help the user to select the most appropriate 95% UCL.**											
448	**These recommendations are based upon the results of the simulation studies summarized in Singh, Maichle, and Lee (2006).**											
449	**For additional insight, the user may want to consult a statistician.**											
450												

	A	B	C	D	E	F	G	H	I	J	K	L
451												
452	Result (benzo(a)pyrene)											
453												
454					General Statistics							
455					Number of Valid Data	28			Number of Detected Data			9
456					Number of Distinct Detected Data	9			Number of Non-Detect Data			19
457									Percent Non-Detects			67.86%
458												
459				Raw Statistics					Log-transformed Statistics			
460					Minimum Detected	0.011			Minimum Detected			-4.51
461					Maximum Detected	0.82			Maximum Detected			-0.198
462					Mean of Detected	0.29			Mean of Detected			-2.085
463					SD of Detected	0.308			SD of Detected			1.624
464					Minimum Non-Detect	0.069			Minimum Non-Detect			-2.674
465					Maximum Non-Detect	0.15			Maximum Non-Detect			-1.897
466												
467	Note: Data have multiple DLs - Use of KM Method is recommended								Number treated as Non-Detect			24
468	For all methods (except KM, DL/2, and ROS Methods),								Number treated as Detected			4
469	Observations < Largest ND are treated as NDs								Single DL Non-Detect Percentage			85.71%
470												
471					Warning: There are only 9 Detected Values in this data							
472					Note: It should be noted that even though bootstrap may be performed on this data set							
473					the resulting calculations may not be reliable enough to draw conclusions							
474												
475					It is recommended to have 10-15 or more distinct observations for accurate and meaningful results.							
476												
477												
478					UCL Statistics							
479				Normal Distribution Test with Detected Values Only					Lognormal Distribution Test with Detected Values Only			
480					Shapiro Wilk Test Statistic	0.837			Shapiro Wilk Test Statistic			0.892
481					5% Shapiro Wilk Critical Value	0.829			5% Shapiro Wilk Critical Value			0.829
482				Data appear Normal at 5% Significance Level					Data appear Lognormal at 5% Significance Level			
483												
484				Assuming Normal Distribution					Assuming Lognormal Distribution			
485					DL/2 Substitution Method				DL/2 Substitution Method			
486					Mean	0.121			Mean			-2.862
487					SD	0.205			SD			1.055
488					95% DL/2 (t) UCL	0.187			95% H-Stat (DL/2) UCL			0.166
489												
490					Maximum Likelihood Estimate(MLE) Method	N/A			Log ROS Method			
491					MLE yields a negative mean				Mean in Log Scale			-3.583
492									SD in Log Scale			1.486
493									Mean in Original Scale			0.105
494									SD in Original Scale			0.212
495									95% t UCL			0.173
496									95% Percentile Bootstrap UCL			0.177
497									95% BCA Bootstrap UCL			0.195
498									95% H-UCL			0.204
499												
500				Gamma Distribution Test with Detected Values Only					Data Distribution Test with Detected Values Only			

	A	B	C	D	E	F	G	H	I	J	K	L
501					k star (bias corrected)	0.548			Data appear Normal at 5% Significance Level			
502					Theta Star	0.529						
503					nu star	9.867						
504												
505					A-D Test Statistic	0.446			Nonparametric Statistics			
506					5% A-D Critical Value	0.754					Kaplan-Meier (KM) Method	
507					K-S Test Statistic	0.754					Mean	0.105
508					5% K-S Critical Value	0.29					SD	0.209
509		Data appear Gamma Distributed at 5% Significance Level									SE of Mean	0.042
510											95% KM (t) UCL	0.176
511			Assuming Gamma Distribution								95% KM (z) UCL	0.174
512				Gamma ROS Statistics using Extrapolated Data							95% KM (jackknife) UCL	0.173
513					Minimum	0.000001					95% KM (bootstrap t) UCL	0.21
514					Maximum	0.82					95% KM (BCA) UCL	0.202
515					Mean	0.103					95% KM (Percentile Bootstrap) UCL	0.188
516					Median	0.0055					95% KM (Chebyshev) UCL	0.288
517					SD	0.214					97.5% KM (Chebyshev) UCL	0.367
518					k star	0.143					99% KM (Chebyshev) UCL	0.522
519					Theta star	0.723						
520					Nu star	8.019			Potential UCLs to Use			
521					AppChi2	2.746					95% KM (t) UCL	0.176
522					95% Gamma Approximate UCL (Use when n >= 40)	0.302					95% KM (Percentile Bootstrap) UCL	0.188
523					95% Adjusted Gamma UCL (Use when n < 40)	0.324						
524	Note: DL/2 is not a recommended method.											
525												
526				Note: Suggestions regarding the selection of a 95% UCL are provided to help the user to select the most appropriate 95% UCL.								
527				These recommendations are based upon the results of the simulation studies summarized in Singh, Maichle, and Lee (2006).								
528				For additional insight, the user may want to consult a statistician.								
529												
530												
531	Result (benzo(b)fluoranthene)											
532												
533					General Statistics							
534					Number of Valid Data	28					Number of Detected Data	10
535					Number of Distinct Detected Data	9					Number of Non-Detect Data	18
536											Percent Non-Detects	64.29%
537												
538				Raw Statistics					Log-transformed Statistics			
539					Minimum Detected	0.014					Minimum Detected	-4.269
540					Maximum Detected	1.1					Maximum Detected	0.0953
541					Mean of Detected	0.331					Mean of Detected	-1.929
542					SD of Detected	0.375					SD of Detected	1.54
543					Minimum Non-Detect	0.069					Minimum Non-Detect	-2.674
544					Maximum Non-Detect	0.15					Maximum Non-Detect	-1.897
545												
546	Note: Data have multiple DLs - Use of KM Method is recommended										Number treated as Non-Detect	24
547	For all methods (except KM, DL/2, and ROS Methods),										Number treated as Detected	4
548	Observations < Largest ND are treated as NDs										Single DL Non-Detect Percentage	85.71%
549												
550					UCL Statistics							

	A	B	C	D	E	F	G	H	I	J	K	L
551	**Normal Distribution Test with Detected Values Only**						**Lognormal Distribution Test with Detected Values Only**					
552					Shapiro Wilk Test Statistic	0.819					Shapiro Wilk Test Statistic	0.92
553					5% Shapiro Wilk Critical Value	0.842					5% Shapiro Wilk Critical Value	0.842
554	**Data not Normal at 5% Significance Level**						**Data appear Lognormal at 5% Significance Level**					
555												
556	**Assuming Normal Distribution**						**Assuming Lognormal Distribution**					
557					DL/2 Substitution Method						DL/2 Substitution Method	
558					Mean	0.144					Mean	-2.762
559					SD	0.259					SD	1.107
560					95% DL/2 (t) UCL	0.228					95% H-Stat (DL/2) UCL	0.202
561												
562					Maximum Likelihood Estimate(MLE) Method	N/A					Log ROS Method	
563	**MLE yields a negative mean**										Mean in Log Scale	-3.373
564											SD in Log Scale	1.503
565											Mean in Original Scale	0.13
566											SD in Original Scale	0.265
567											95% t UCL	0.215
568											95% Percentile Bootstrap UCL	0.223
569											95% BCA Bootstrap UCL	0.239
570											95% H-UCL	0.263
571												
572	**Gamma Distribution Test with Detected Values Only**						**Data Distribution Test with Detected Values Only**					
573					k star (bias corrected)	0.578	**Data appear Gamma Distributed at 5% Significance Level**					
574					Theta Star	0.572						
575					nu star	11.57						
576												
577					A-D Test Statistic	0.375	**Nonparametric Statistics**					
578					5% A-D Critical Value	0.758					Kaplan-Meier (KM) Method	
579					K-S Test Statistic	0.758					Mean	0.13
580					5% K-S Critical Value	0.276					SD	0.26
581	**Data appear Gamma Distributed at 5% Significance Level**										SE of Mean	0.0519
582											95% KM (t) UCL	0.219
583	**Assuming Gamma Distribution**										95% KM (z) UCL	0.216
584					Gamma ROS Statistics using Extrapolated Data						95% KM (jackknife) UCL	0.216
585					Minimum	0.000001					95% KM (bootstrap t) UCL	0.285
586					Maximum	1.1					95% KM (BCA) UCL	0.25
587					Mean	0.122					95% KM (Percentile Bootstrap) UCL	0.232
588					Median	0.000001					95% KM (Chebyshev) UCL	0.357
589					SD	0.269					97.5% KM (Chebyshev) UCL	0.455
590					k star	0.13					99% KM (Chebyshev) UCL	0.647
591					Theta star	0.942						
592					Nu star	7.273	**Potential UCLs to Use**					
593					AppChi2	2.322					95% KM (t) UCL	0.219
594					95% Gamma Approximate UCL (Use when n >= 40)	0.383						
595					95% Adjusted Gamma UCL (Use when n < 40)	0.413						
596	**Note: DL/2 is not a recommended method.**											
597												
598	**Note: Suggestions regarding the selection of a 95% UCL are provided to help the user to select the most appropriate 95% UCL.**											
599	**These recommendations are based upon the results of the simulation studies summarized in Singh, Maichle, and Lee (2006).**											
600	**For additional insight, the user may want to consult a statistician.**											

	A	B	C	D	E	F	G	H	I	J	K	L
601												
602												
603	Result (benzo(ghi)perylene)											
604												
605	General Statistics											
606					Number of Valid Data	28				Number of Detected Data		7
607					Number of Distinct Detected Data	7				Number of Non-Detect Data		21
608										Percent Non-Detects		75.00%
609												
610	Raw Statistics						Log-transformed Statistics					
611					Minimum Detected	0.041				Minimum Detected		-3.194
612					Maximum Detected	0.48				Maximum Detected		-0.734
613					Mean of Detected	0.213				Mean of Detected		-1.874
614					SD of Detected	0.166				SD of Detected		0.935
615					Minimum Non-Detect	0.069				Minimum Non-Detect		-2.674
616					Maximum Non-Detect	0.15				Maximum Non-Detect		-1.897
617												
618	Note: Data have multiple DLs - Use of KM Method is recommended									Number treated as Non-Detect		24
619	For all methods (except KM, DL/2, and ROS Methods),									Number treated as Detected		4
620	Observations < Largest ND are treated as NDs									Single DL Non-Detect Percentage		85.71%
621												
622	Warning: There are only 7 Detected Values in this data											
623	Note: It should be noted that even though bootstrap may be performed on this data set											
624	the resulting calculations may not be reliable enough to draw conclusions											
625												
626	It is recommended to have 10-15 or more distinct observations for accurate and meaningful results.											
627												
628												
629	UCL Statistics											
630	Normal Distribution Test with Detected Values Only						Lognormal Distribution Test with Detected Values Only					
631					Shapiro Wilk Test Statistic	0.918				Shapiro Wilk Test Statistic		0.94
632					5% Shapiro Wilk Critical Value	0.803				5% Shapiro Wilk Critical Value		0.803
633	Data appear Normal at 5% Significance Level						Data appear Lognormal at 5% Significance Level					
634												
635	Assuming Normal Distribution						Assuming Lognormal Distribution					
636					DL/2 Substitution Method					DL/2 Substitution Method		
637					Mean	0.0835				Mean		-2.898
638					SD	0.11				SD		0.769
639					95% DL/2 (t) UCL	0.119				95% H-Stat (DL/2) UCL		0.103
640												
641					Maximum Likelihood Estimate(MLE) Method					Log ROS Method		
642					Mean	0.346				Mean in Log Scale		-2.766
643					SD	0.109				SD in Log Scale		0.768
644					95% MLE (t) UCL	0.381				Mean in Original Scale		0.091
645					95% MLE (Tiku) UCL	0.437				SD in Original Scale		0.107
646										95% t UCL		0.126
647										95% Percentile Bootstrap UCL		0.127
648										95% BCA Bootstrap UCL		0.137
649										95% H UCL		0.117
650												

	A	B	C	D	E	F	G	H	I	J	K	L
651	**Gamma Distribution Test with Detected Values Only**						**Data Distribution Test with Detected Values Only**					
652					k star (bias corrected)	1.05	**Data appear Normal at 5% Significance Level**					
653					Theta Star	0.203						
654					nu star	14.7						
655												
656					A-D Test Statistic	0.261	**Nonparametric Statistics**					
657					5% A-D Critical Value	0.719					Kaplan-Meier (KM) Method	
658					K-S Test Statistic	0.719					Mean	0.092
659					5% K-S Critical Value	0.316					SD	0.104
660	**Data appear Gamma Distributed at 5% Significance Level**										SE of Mean	0.0222
661											95% KM (t) UCL	0.13
662	**Assuming Gamma Distribution**										95% KM (z) UCL	0.129
663				Gamma ROS Statistics using Extrapolated Data							95% KM (jackknife) UCL	0.132
664					Minimum	0.000001					95% KM (bootstrap t) UCL	0.144
665					Maximum	0.48					95% KM (BCA) UCL	0.222
666					Mean	0.0954					95% KM (Percentile Bootstrap) UCL	0.172
667					Median	0.0518					95% KM (Chebyshev) UCL	0.189
668					SD	0.115					97.5% KM (Chebyshev) UCL	0.231
669					k star	0.223					99% KM (Chebyshev) UCL	0.313
670					Theta star	0.427						
671					Nu star	12.5	**Potential UCLs to Use**					
672					AppChi2	5.558					95% KM (t) UCL	0.13
673					95% Gamma Approximate UCL (Use when n >= 40)	0.214					95% KM (Percentile Bootstrap) UCL	0.172
674					95% Adjusted Gamma UCL (Use when n < 40)	0.226						
675	**Note: DL/2 is not a recommended method.**											
676												
677	**Note: Suggestions regarding the selection of a 95% UCL are provided to help the user to select the most appropriate 95% UCL.**											
678	**These recommendations are based upon the results of the simulation studies summarized in Singh, Maichle, and Lee (2006).**											
679	**For additional insight, the user may want to consult a statistician.**											
680												
681												
682	**Result (benzo(k)fluoranthene)**											
683												
684	**General Statistics**											
685					Number of Valid Data	28					Number of Detected Data	9
686					Number of Distinct Detected Data	9					Number of Non-Detect Data	19
687											Percent Non-Detects	67.86%
688												
689	**Raw Statistics**						**Log-transformed Statistics**					
690					Minimum Detected	0.011					Minimum Detected	-4.51
691					Maximum Detected	0.44					Maximum Detected	-0.821
692					Mean of Detected	0.167					Mean of Detected	-2.486
693					SD of Detected	0.169					SD of Detected	1.378
694					Minimum Non-Detect	0.069					Minimum Non-Detect	-2.674
695					Maximum Non-Detect	0.15					Maximum Non-Detect	-1.897
696												
697	Note: Data have multiple DLs - Use of KM Method is recommended										Number treated as Non-Detect	24
698	For all methods (except KM, DL/2, and ROS Methods),										Number treated as Detected	4
699	Observations < Largest ND are treated as NDs										Single DL Non-Detect Percentage	85.71%
700												

	A	B	C	D	E	F	G	H	I	J	K	L
701	Warning: There are only 9 Detected Values in this data											
702	Note: It should be noted that even though bootstrap may be performed on this data set											
703	the resulting calculations may not be reliable enough to draw conclusions											
704												
705	It is recommended to have 10-15 or more distinct observations for accurate and meaningful results.											
706												
707												
708	UCL Statistics											
709	Normal Distribution Test with Detected Values Only						Lognormal Distribution Test with Detected Values Only					
710					Shapiro Wilk Test Statistic	0.826			Shapiro Wilk Test Statistic			0.898
711					5% Shapiro Wilk Critical Value	0.829			5% Shapiro Wilk Critical Value			0.829
712	Data not Normal at 5% Significance Level						Data appear Lognormal at 5% Significance Level					
713												
714	Assuming Normal Distribution						Assuming Lognormal Distribution					
715					DL/2 Substitution Method				DL/2 Substitution Method			
716					Mean	0.0812			Mean			-2.992
717					SD	0.11			SD			0.85
718					95% DL/2 (t) UCL	0.117			95% H-Stat (DL/2) UCL			0.105
719												
720					Maximum Likelihood Estimate(MLE) Method	N/A			Log ROS Method			
721	MLE yields a negative mean								Mean in Log Scale			-3.154
722									SD in Log Scale			0.979
723									Mean in Original Scale			0.0774
724									SD in Original Scale			0.112
725									95% t UCL			0.114
726									95% Percentile Bootstrap UCL			0.113
727									95% BCA Bootstrap UCL			0.121
728									95% H-UCL			0.109
729												
730	Gamma Distribution Test with Detected Values Only						Data Distribution Test with Detected Values Only					
731					k star (bias corrected)	0.64	Data appear Gamma Distributed at 5% Significance Level					
732					Theta Star	0.261						
733					nu star	11.51						
734												
735					A-D Test Statistic	0.572	Nonparametric Statistics					
736					5% A-D Critical Value	0.748			Kaplan-Meier (KM) Method			
737					K-S Test Statistic	0.748			Mean			0.0753
738					5% K-S Critical Value	0.288			SD			0.111
739	Data appear Gamma Distributed at 5% Significance Level								SE of Mean			0.0229
740									95% KM (t) UCL			0.114
741	Assuming Gamma Distribution								95% KM (z) UCL			0.113
742					Gamma ROS Statistics using Extrapolated Data				95% KM (jackknife) UCL			0.113
743					Minimum	0.000001			95% KM (bootstrap t) UCL			0.126
744					Maximum	0.44			95% KM (BCA) UCL			0.115
745					Mean	0.0895			95% KM (Percentile Bootstrap) UCL			0.114
746					Median	0.0395			95% KM (Chebyshev) UCL			0.175
747					SD	0.115			97.5% KM (Chebyshev) UCL			0.218
748					k star	0.239			99% KM (Chebyshev) UCL			0.303
749					Theta star	0.374						
750					Nu star	13.4	Potential UCLs to Use					

	A	B	C	D	E	F	G	H	I	J	K	L
751					AppChi2	6.166					95% KM (t) UCL	0.114
752				95% Gamma Approximate UCL (Use when n >= 40)		0.195						
753				95% Adjusted Gamma UCL (Use when n < 40)		0.205						
754	Note: DL/2 is not a recommended method.											
755												
756	Note: Suggestions regarding the selection of a 95% UCL are provided to help the user to select the most appropriate 95% UCL.											
757	These recommendations are based upon the results of the simulation studies summarized in Singh, Maichle, and Lee (2006).											
758	For additional insight, the user may want to consult a statistician.											
759												
760												
761	Result (chromium)											
762												
763	General Statistics											
764				Number of Valid Data		16					Number of Detected Data	15
765				Number of Distinct Detected Data		11					Number of Non-Detect Data	1
766											Percent Non-Detects	6.25%
767												
768	Raw Statistics						Log-transformed Statistics					
769				Minimum Detected		1					Minimum Detected	0
770				Maximum Detected		7.8					Maximum Detected	2.054
771				Mean of Detected		3.153					Mean of Detected	1.023
772				SD of Detected		1.726					SD of Detected	0.521
773				Minimum Non-Detect		0.38					Minimum Non-Detect	-0.968
774				Maximum Non-Detect		0.38					Maximum Non-Detect	-0.968
775												
776												
777	UCL Statistics											
778	Normal Distribution Test with Detected Values Only						Lognormal Distribution Test with Detected Values Only					
779				Shapiro Wilk Test Statistic		0.834					Shapiro Wilk Test Statistic	0.944
780				5% Shapiro Wilk Critical Value		0.881					5% Shapiro Wilk Critical Value	0.881
781	Data not Normal at 5% Significance Level						Data appear Lognormal at 5% Significance Level					
782												
783	Assuming Normal Distribution						Assuming Lognormal Distribution					
784				DL/2 Substitution Method							DL/2 Substitution Method	
785				Mean		2.968					Mean	0.855
786				SD		1.825					SD	0.839
787				95% DL/2 (t) UCL		3.768					95% H-Stat (DL/2) UCL	5.704
788												
789				Maximum Likelihood Estimate(MLE) Method							Log ROS Method	
790				Mean		2.927					Mean in Log Scale	0.945
791				SD		1.846					SD in Log Scale	0.592
792				95% MLE (t) UCL		3.736					Mean in Original Scale	3.006
793				95% MLE (Tiku) UCL		3.733					SD in Original Scale	1.768
794											95% t UCL	3.781
795											95% Percentile Bootstrap UCL	3.8
796											95% BCA Bootstrap UCL	3.913
797											95% H UCL	4.257
798												
799	Gamma Distribution Test with Detected Values Only						Data Distribution Test with Detected Values Only					
800				k star (bias corrected)		3.355	Data Follow Appr. Gamma Distribution at 5% Significance Level					

	A	B	C	D	E	F	G	H	I	J	K	L
801					Theta Star	0.94						
802					nu star	100.7						
803												
804					A-D Test Statistic	0.546	Nonparametric Statistics					
805					5% A-D Critical Value	0.74					Kaplan-Meier (KM) Method	
806					K-S Test Statistic	0.74					Mean	3.019
807					5% K-S Critical Value	0.222					SD	1.697
808	Data follow Appr. Gamma Distribution at 5% Significance Level										SE of Mean	0.439
809											95% KM (t) UCL	3.788
810			Assuming Gamma Distribution								95% KM (z) UCL	3.741
811				Gamma ROS Statistics using Extrapolated Data							95% KM (jackknife) UCL	3.779
812					Minimum	0.000001					95% KM (bootstrap t) UCL	4.191
813					Maximum	7.8					95% KM (BCA) UCL	3.769
814					Mean	2.956					95% KM (Percentile Bootstrap) UCL	3.775
815					Median	2.75					95% KM (Chebyshev) UCL	4.933
816					SD	1.845					97.5% KM (Chebyshev) UCL	5.761
817					k star	0.547					99% KM (Chebyshev) UCL	7.388
818					Theta star	5.406						
819					Nu star	17.5	Potential UCLs to Use					
820					AppChi2	9.03					95% KM (BCA) UCL	3.769
821				95% Gamma Approximate UCL (Use when n >= 40)		5.729						
822				95% Adjusted Gamma UCL (Use when n < 40)		6.2						
823	Note: DL/2 is not a recommended method.											
824												
825	Note: Suggestions regarding the selection of a 95% UCL are provided to help the user to select the most appropriate 95% UCL.											
826	These recommendations are based upon the results of the simulation studies summarized in Singh, Maichle, and Lee (2006).											
827	For additional insight, the user may want to consult a statistician.											
828												
829												
830	Result (chrysene)											
831												
832					General Statistics							
833					Number of Valid Data	28					Number of Detected Data	8
834					Number of Distinct Detected Data	7					Number of Non-Detect Data	20
835											Percent Non-Detects	71.43%
836												
837				Raw Statistics			Log-transformed Statistics					
838					Minimum Detected	0.044					Minimum Detected	-3.124
839					Maximum Detected	0.57					Maximum Detected	-0.562
840					Mean of Detected	0.273					Mean of Detected	-1.675
841					SD of Detected	0.222					SD of Detected	0.99
842					Minimum Non-Detect	0.069					Minimum Non-Detect	-2.674
843					Maximum Non-Detect	0.15					Maximum Non-Detect	-1.897
844												
845	Note: Data have multiple DLs - Use of KM Method is recommended										Number treated as Non-Detect	24
846	For all methods (except KM, DL/2, and ROS Methods),										Number treated as Detected	4
847	Observations < Largest ND are treated as NDs										Single DL Non-Detect Percentage	85.71%
848												
849	Warning: There are only 8 Detected Values in this data											
850	Note: It should be noted that even though bootstrap may be performed on this data set											

	A	B	C	D	E	F	G	H	I	J	K	L
851	the resulting calculations may not be reliable enough to draw conclusions											
852												
853	It is recommended to have 10-15 or more distinct observations for accurate and meaningful results.											
854												
855												
856	UCL Statistics											
857	Normal Distribution Test with Detected Values Only						Lognormal Distribution Test with Detected Values Only					
858					Shapiro Wilk Test Statistic	0.837			Shapiro Wilk Test Statistic			0.88
859					5% Shapiro Wilk Critical Value	0.818			5% Shapiro Wilk Critical Value			0.818
860	Data appear Normal at 5% Significance Level						Data appear Lognormal at 5% Significance Level					
861												
862	Assuming Normal Distribution						Assuming Lognormal Distribution					
863					DL/2 Substitution Method				DL/2 Substitution Method			
864					Mean	0.107			Mean			-2.79
865					SD	0.156			SD			0.897
866					95% DL/2 (t) UCL	0.157			95% H-Stat (DL/2) UCL			0.138
867												
868					Maximum Likelihood Estimate(MLE) Method	N/A			Log ROS Method			
869	MLE yields a negative mean								Mean in Log Scale			-2.993
870									SD in Log Scale			1.07
871									Mean in Original Scale			0.102
872									SD in Original Scale			0.159
873									95% t UCL			0.153
874									95% Percentile Bootstrap UCL			0.152
875									95% BCA Bootstrap UCL			0.167
876									95% H-UCL			0.15
877												
878	Gamma Distribution Test with Detected Values Only						Data Distribution Test with Detected Values Only					
879					k star (bias corrected)	1.001	Data appear Normal at 5% Significance Level					
880					Theta Star	0.273						
881					nu star	16.02						
882												
883					A-D Test Statistic	0.557	Nonparametric Statistics					
884					5% A-D Critical Value	0.729			Kaplan-Meier (KM) Method			
885					K-S Test Statistic	0.729			Mean			0.11
886					5% K-S Critical Value	0.299			SD			0.152
887	Data appear Gamma Distributed at 5% Significance Level								SE of Mean			0.0307
888									95% KM (t) UCL			0.162
889	Assuming Gamma Distribution								95% KM (z) UCL			0.16
890					Gamma ROS Statistics using Extrapolated Data				95% KM (jackknife) UCL			0.155
891					Minimum	0.000001			95% KM (bootstrap t) UCL			0.175
892					Maximum	0.57			95% KM (BCA) UCL			0.22
893					Mean	0.087			95% KM (Percentile Bootstrap) UCL			0.183
894					Median	0.0105			95% KM (Chebyshev) UCL			0.244
895					SD	0.166			97.5% KM (Chebyshev) UCL			0.302
896					k star	0.159			99% KM (Chebyshev) UCL			0.415
897					Theta star	0.547						
898					Nu star	8.911	Potential UCLs to Use					
899					AppChi2	3.273			95% KM (t) UCL			0.162
900					95% Gamma Approximate UCL (Use when n >= 40)	0.237			95% KM (Percentile Bootstrap) UCL			0.183

	A	B	C	D	E	F	G	H	I	J	K	L
901				95% Adjusted Gamma UCL (Use when n < 40)		0.253						
902	Note: DL/2 is not a recommended method.											
903												
904	Note: Suggestions regarding the selection of a 95% UCL are provided to help the user to select the most appropriate 95% UCL.											
905	These recommendations are based upon the results of the simulation studies summarized in Singh, Maichle, and Lee (2006).											
906	For additional insight, the user may want to consult a statistician.											
907												
908												
909	Result (dibenz(a,h)anthracene)											
910												
911	General Statistics											
912				Number of Valid Data		28			Number of Detected Data			5
913				Number of Distinct Detected Data		5			Number of Non-Detect Data			23
914									Percent Non-Detects			82.14%
915												
916	Raw Statistics						Log-transformed Statistics					
917				Minimum Detected		0.012			Minimum Detected			-4.423
918				Maximum Detected		0.1			Maximum Detected			-2.303
919				Mean of Detected		0.0498			Mean of Detected			-3.275
920				SD of Detected		0.0362			SD of Detected			0.889
921				Minimum Non-Detect		0.069			Minimum Non-Detect			-2.674
922				Maximum Non-Detect		0.15			Maximum Non-Detect			-1.897
923												
924	Note: Data have multiple DLs - Use of KM Method is recommended								Number treated as Non-Detect			28
925	For all methods (except KM, DL/2, and ROS Methods),								Number treated as Detected			0
926	Observations < Largest ND are treated as NDs								Single DL Non-Detect Percentage			100.00%
927												
928	Warning: There are only 5 Detected Values in this data											
929	Note: It should be noted that even though bootstrap may be performed on this data set											
930	the resulting calculations may not be reliable enough to draw conclusions											
931												
932	It is recommended to have 10-15 or more distinct observations for accurate and meaningful results.											
933												
934												
935	UCL Statistics											
936	Normal Distribution Test with Detected Values Only						Lognormal Distribution Test with Detected Values Only					
937				Shapiro Wilk Test Statistic		0.945			Shapiro Wilk Test Statistic			0.933
938				5% Shapiro Wilk Critical Value		0.762			5% Shapiro Wilk Critical Value			0.762
939	Data appear Normal at 5% Significance Level						Data appear Lognormal at 5% Significance Level					
940												
941	Assuming Normal Distribution						Assuming Lognormal Distribution					
942				DL/2 Substitution Method					DL/2 Substitution Method			
943				Mean		0.0418			Mean			-3.249
944				SD		0.0176			SD			0.391
945				95% DL/2 (t) UCL		0.0474			95% H-Stat (DL/2) UCL			0.0482
946												
947				Maximum Likelihood Estimate(MLE) Method		N/A			Log ROS Method			
948	MLE method failed to converge properly								Mean in Log Scale			-3.526
949									SD in Log Scale			0.483
950									Mean in Original Scale			0.0332

	A	B	C	D	E	F	G	H	I	J	K	L
951											SD in Original Scale	0.0185
952											95% t UCL	0.0391
953											95% Percentile Bootstrap UCL	0.0394
954											95% BCA Bootstrap UCL	0.04
955											95% H-UCL	0.0395
956												
957				**Gamma Distribution Test with Detected Values Only**					**Data Distribution Test with Detected Values Only**			
958					k star (bias corrected)	0.921			**Data appear Normal at 5% Significance Level**			
959					Theta Star	0.0541						
960					nu star	9.213						
961												
962					A-D Test Statistic	0.271			**Nonparametric Statistics**			
963					5% A-D Critical Value	0.685					Kaplan-Meier (KM) Method	
964					K-S Test Statistic	0.685					Mean	0.0397
965					5% K-S Critical Value	0.361					SD	0.0254
966				**Data appear Gamma Distributed at 5% Significance Level**							SE of Mean	0.0125
967											95% KM (t) UCL	0.061
968				**Assuming Gamma Distribution**							95% KM (z) UCL	0.0603
969					Gamma ROS Statistics using Extrapolated Data						95% KM (jackknife) UCL	0.0644
970					Minimum	0.011					95% KM (bootstrap t) UCL	0.0799
971					Maximum	0.1					95% KM (BCA) UCL	0.0623
972					Mean	0.0402					95% KM (Percentile Bootstrap) UCL	0.0634
973					Median	0.0375					95% KM (Chebyshev) UCL	0.0943
974					SD	0.0236					97.5% KM (Chebyshev) UCL	0.118
975					k star	2.369					99% KM (Chebyshev) UCL	0.164
976					Theta star	0.017						
977					Nu star	132.7			**Potential UCLs to Use**			
978					AppChi2	107.1					95% KM (t) UCL	0.061
979					95% Gamma Approximate UCL (Use when n >= 40)	0.0498					95% KM (Percentile Bootstrap) UCL	0.0634
980					95% Adjusted Gamma UCL (Use when n < 40)	0.0505						
981	**Note: DL/2 is not a recommended method.**											
982												
983	**Note: Suggestions regarding the selection of a 95% UCL are provided to help the user to select the most appropriate 95% UCL.**											
984	**These recommendations are based upon the results of the simulation studies summarized in Singh, Maichle, and Lee (2006).**											
985	**For additional insight, the user may want to consult a statistician.**											
986												
987												
988	**Result (fluoranthene)**											
989												
990					**General Statistics**							
991					Number of Valid Data	28					Number of Detected Data	9
992					Number of Distinct Detected Data	9					Number of Non-Detect Data	19
993											Percent Non-Detects	67.86%
994												
995				**Raw Statistics**					**Log-transformed Statistics**			
996					Minimum Detected	0.013					Minimum Detected	-4.343
997					Maximum Detected	0.28					Maximum Detected	-1.273
998					Mean of Detected	0.124					Mean of Detected	-2.44
999					SD of Detected	0.0884					SD of Detected	1.032
1000					Minimum Non-Detect	0.069					Minimum Non-Detect	-2.674

	A	B	C	D	E	F	G	H	I	J	K	L
1001					Maximum Non-Detect	0.15					Maximum Non-Detect	-1.897
1002												
1003	Note: Data have multiple DLs - Use of KM Method is recommended										Number treated as Non-Detect	25
1004	For all methods (except KM, DL/2, and ROS Methods),										Number treated as Detected	3
1005	Observations < Largest ND are treated as NDs										Single DL Non-Detect Percentage	89.29%
1006												
1007	**Warning: There are only 9 Detected Values in this data**											
1008	**Note: It should be noted that even though bootstrap may be performed on this data set**											
1009	**the resulting calculations may not be reliable enough to draw conclusions**											
1010												
1011	**It is recommended to have 10-15 or more distinct observations for accurate and meaningful results.**											
1012												
1013												
1014	**UCL Statistics**											
1015	**Normal Distribution Test with Detected Values Only**						**Lognormal Distribution Test with Detected Values Only**					
1016					Shapiro Wilk Test Statistic	0.945					Shapiro Wilk Test Statistic	0.886
1017					5% Shapiro Wilk Critical Value	0.829					5% Shapiro Wilk Critical Value	0.829
1018	**Data appear Normal at 5% Significance Level**						**Data appear Lognormal at 5% Significance Level**					
1019												
1020	**Assuming Normal Distribution**						**Assuming Lognormal Distribution**					
1021					DL/2 Substitution Method						DL/2 Substitution Method	
1022					Mean	0.0674					Mean	-2.976
1023					SD	0.063					SD	0.701
1024					95% DL/2 (t) UCL	0.0876					95% H-Stat (DL/2) UCL	0.0868
1025												
1026					Maximum Likelihood Estimate(MLE) Method	N/A					Log ROS Method	
1027	**MLE yields a negative mean**										Mean in Log Scale	-3.47
1028											SD in Log Scale	0.986
1029											Mean in Original Scale	0.054
1030											SD in Original Scale	0.0689
1031											95% t UCL	0.0762
1032											95% Percentile Bootstrap UCL	0.0763
1033											95% BCA Bootstrap UCL	0.0816
1034											95% H-UCL	0.0804
1035												
1036	**Gamma Distribution Test with Detected Values Only**						**Data Distribution Test with Detected Values Only**					
1037					k star (bias corrected)	1.126	**Data appear Normal at 5% Significance Level**					
1038					Theta Star	0.11						
1039					nu star	20.26						
1040												
1041					A-D Test Statistic	0.321	**Nonparametric Statistics**					
1042					5% A-D Critical Value	0.734					Kaplan-Meier (KM) Method	
1043					K-S Test Statistic	0.734					Mean	0.0523
1044					5% K-S Critical Value	0.284					SD	0.0689
1045	**Data appear Gamma Distributed at 5% Significance Level**										SE of Mean	0.0141
1046											95% KM (t) UCL	0.0763
1047	**Assuming Gamma Distribution**										95% KM (z) UCL	0.0755
1048					Gamma ROS Statistics using Extrapolated Data						95% KM (jackknife) UCL	0.0761
1049					Minimum	0.000001					95% KM (bootstrap t) UCL	0.0833
1050					Maximum	0.28					95% KM (BCA) UCL	0.115

	A	B	C	D	E	F	G	H	I	J	K	L
1051					Mean	0.0541				95% KM (Percentile Bootstrap) UCL		0.105
1052					Median	0.0324				95% KM (Chebyshev) UCL		0.114
1053					SD	0.0718				97.5% KM (Chebyshev) UCL		0.14
1054					k star	0.238				99% KM (Chebyshev) UCL		0.193
1055					Theta star	0.228						
1056					Nu star	13.3				**Potential UCLs to Use**		
1057					AppChi2	6.097				95% KM (t) UCL		0.0763
1058				95% Gamma Approximate UCL (Use when n >= 40)		0.118				95% KM (Percentile Bootstrap) UCL		0.105
1059				95% Adjusted Gamma UCL (Use when n < 40)		0.124						
1060	**Note: DL/2 is not a recommended method.**											
1061												
1062	**Note: Suggestions regarding the selection of a 95% UCL are provided to help the user to select the most appropriate 95% UCL.**											
1063	**These recommendations are based upon the results of the simulation studies summarized in Singh, Maichle, and Lee (2006).**											
1064	**For additional insight, the user may want to consult a statistician.**											
1065												
1066												
1067	**Result (indeno(1,2,3-cd)pyrene)**											
1068												
1069					**General Statistics**							
1070					Number of Valid Data	28				Number of Detected Data		7
1071					Number of Distinct Detected Data	7				Number of Non-Detect Data		21
1072										Percent Non-Detects		75.00%
1073												
1074					**Raw Statistics**					**Log-transformed Statistics**		
1075					Minimum Detected	0.036				Minimum Detected		-3.324
1076					Maximum Detected	0.42				Maximum Detected		-0.868
1077					Mean of Detected	0.181				Mean of Detected		-2.085
1078					SD of Detected	0.15				SD of Detected		1.002
1079					Minimum Non-Detect	0.069				Minimum Non-Detect		-2.674
1080					Maximum Non-Detect	0.15				Maximum Non-Detect		-1.897
1081												
1082	Note: Data have multiple DLs - Use of KM Method is recommended									Number treated as Non-Detect		24
1083	For all methods (except KM, DL/2, and ROS Methods),									Number treated as Detected		4
1084	Observations < Largest ND are treated as NDs									Single DL Non-Detect Percentage		85.71%
1085												
1086	**Warning: There are only 7 Detected Values in this data**											
1087	**Note: It should be noted that even though bootstrap may be performed on this data set**											
1088	**the resulting calculations may not be reliable enough to draw conclusions**											
1089												
1090	**It is recommended to have 10-15 or more distinct observations for accurate and meaningful results.**											
1091												
1092												
1093					**UCL Statistics**							
1094					**Normal Distribution Test with Detected Values Only**					**Lognormal Distribution Test with Detected Values Only**		
1095					Shapiro Wilk Test Statistic	0.896				Shapiro Wilk Test Statistic		0.904
1096					5% Shapiro Wilk Critical Value	0.803				5% Shapiro Wilk Critical Value		0.803
1097					**Data appear Normal at 5% Significance Level**					**Data appear Lognormal at 5% Significance Level**		
1098												
1099					**Assuming Normal Distribution**					**Assuming Lognormal Distribution**		
1100					DL/2 Substitution Method					DL/2 Substitution Method		

	A	B	C	D	E	F	G	H	I	J	K	L
1101					Mean	0.0756					Mean	-2.951
1102					SD	0.0949					SD	0.719
1103					95% DL/2 (t) UCL	0.106					95% H-Stat (DL/2) UCL	0.0911
1104												
1105					Maximum Likelihood Estimate(MLE) Method	N/A					Log ROS Method	
1106					**MLE yields a negative mean**						Mean in Log Scale	-2.801
1107											SD in Log Scale	0.722
1108											Mean in Original Scale	0.0841
1109											SD in Original Scale	0.0928
1110											95% t UCL	0.114
1111											95% Percentile Bootstrap UCL	0.112
1112											95% BCA Bootstrap UCL	0.123
1113											95% H-UCL	0.106
1114												
1115					**Gamma Distribution Test with Detected Values Only**						**Data Distribution Test with Detected Values Only**	
1116					k star (bias corrected)	0.933					**Data appear Normal at 5% Significance Level**	
1117					Theta Star	0.195						
1118					nu star	13.06						
1119												
1120					A-D Test Statistic	0.347					**Nonparametric Statistics**	
1121					5% A-D Critical Value	0.722					Kaplan-Meier (KM) Method	
1122					K-S Test Statistic	0.722					Mean	0.0804
1123					5% K-S Critical Value	0.317					SD	0.0914
1124					**Data appear Gamma Distributed at 5% Significance Level**						SE of Mean	0.0195
1125											95% KM (t) UCL	0.114
1126					**Assuming Gamma Distribution**						95% KM (z) UCL	0.112
1127					Gamma ROS Statistics using Extrapolated Data						95% KM (jackknife) UCL	0.113
1128					Minimum	0.000001					95% KM (bootstrap t) UCL	0.132
1129					Maximum	0.42					95% KM (BCA) UCL	0.164
1130					Mean	0.0929					95% KM (Percentile Bootstrap) UCL	0.134
1131					Median	0.0585					95% KM (Chebyshev) UCL	0.165
1132					SD	0.101					97.5% KM (Chebyshev) UCL	0.202
1133					k star	0.319					99% KM (Chebyshev) UCL	0.274
1134					Theta star	0.291						
1135					Nu star	17.85					**Potential UCLs to Use**	
1136					AppChi2	9.28					95% KM (t) UCL	0.114
1137					95% Gamma Approximate UCL (Use when n >= 40)	0.179					95% KM (Percentile Bootstrap) UCL	0.134
1138					95% Adjusted Gamma UCL (Use when n < 40)	0.186						
1139	**Note: DL/2 is not a recommended method.**											
1140												
1141					**Note: Suggestions regarding the selection of a 95% UCL are provided to help the user to select the most appropriate 95% UCL.**							
1142					**These recommendations are based upon the results of the simulation studies summarized in Singh, Maichle, and Lee (2006).**							
1143					**For additional insight, the user may want to consult a statistician.**							
1144												
1145												
1146	**Result (lead)**											
1147												
1148					**General Statistics**							
1149					Number of Valid Observations	16					Number of Distinct Observations	14
1150												

	A	B	C	D	E	F	G	H	I	J	K	L
1151	**Raw Statistics**						**Log-transformed Statistics**					
1152					Minimum	0.81					Minimum of Log Data	-0.211
1153					Maximum	43					Maximum of Log Data	3.761
1154					Mean	6.207					Mean of log Data	1.314
1155					Geometric Mean	3.72					SD of log Data	0.887
1156					Median	3.55						
1157					SD	10.07						
1158					Std. Error of Mean	2.519						
1159					Coefficient of Variation	1.623						
1160					Skewness	3.671						
1161												
1162	**Relevant UCL Statistics**											
1163	**Normal Distribution Test**						**Lognormal Distribution Test**					
1164					Shapiro Wilk Test Statistic	0.46					Shapiro Wilk Test Statistic	0.899
1165					Shapiro Wilk Critical Value	0.887					Shapiro Wilk Critical Value	0.887
1166	**Data not Normal at 5% Significance Level**						**Data appear Lognormal at 5% Significance Level**					
1167												
1168	**Assuming Normal Distribution**						**Assuming Lognormal Distribution**					
1169					95% Student's-t UCL	10.62					95% H-UCL	9.856
1170	**95% UCLs (Adjusted for Skewness)**										95% Chebyshev (MVUE) UCL	10.93
1171					95% Adjusted-CLT UCL (Chen-1995)	12.82					97.5% Chebyshev (MVUE) UCL	13.35
1172					95% Modified-t UCL (Johnson-1978)	11.01					99% Chebyshev (MVUE) UCL	18.1
1173												
1174	**Gamma Distribution Test**						**Data Distribution**					
1175					k star (bias corrected)	0.946	**Data appear Lognormal at 5% Significance Level**					
1176					Theta Star	6.558						
1177					MLE of Mean	6.207						
1178					MLE of Standard Deviation	6.38						
1179					nu star	30.29						
1180					Approximate Chi Square Value (.05)	18.72	**Nonparametric Statistics**					
1181					Adjusted Level of Significance	0.0335					95% CLT UCL	10.35
1182					Adjusted Chi Square Value	17.69					95% Jackknife UCL	10.62
1183											95% Standard Bootstrap UCL	10.21
1184					Anderson-Darling Test Statistic	1.522					95% Bootstrap-t UCL	26.25
1185					Anderson-Darling 5% Critical Value	0.761					95% Hall's Bootstrap UCL	26.03
1186					Kolmogorov-Smirnov Test Statistic	0.3					95% Percentile Bootstrap UCL	10.92
1187					Kolmogorov-Smirnov 5% Critical Value	0.221					95% BCA Bootstrap UCL	13.51
1188	**Data not Gamma Distributed at 5% Significance Level**										95% Chebyshev(Mean, Sd) UCL	17.18
1189											97.5% Chebyshev(Mean, Sd) UCL	21.94
1190	**Assuming Gamma Distribution**										99% Chebyshev(Mean, Sd) UCL	31.27
1191					95% Approximate Gamma UCL (Use when n >= 40)	10.04						
1192					95% Adjusted Gamma UCL (Use when n < 40)	10.63						
1193												
1194	**Potential UCL to Use**										Use 95% H-UCL	9.856
1195												
1196	**ProUCL computes and outputs H-statistic based UCLs for historical reasons only.**											
1197	**H-statistic often results in unstable (both high and low) values of UCL95 as shown in examples in the Technical Guide.**											
1198	**It is therefore recommended to avoid the use of H-statistic based 95% UCLs.**											
1199	**Use of nonparametric methods are preferred to compute UCL95 for skewed data sets which do not follow a gamma distribution.**											
1200												

	A	B	C	D	E	F	G	H	I	J	K	L
1201	Note: Suggestions regarding the selection of a 95% UCL are provided to help the user to select the most appropriate 95% UCL.											
1202	These recommendations are based upon the results of the simulation studies summarized in Singh, Singh, and Iaci (2002)											
1203	and Singh and Singh (2003). For additional insight, the user may want to consult a statistician.											
1204												
1205												
1206	Result (mercury)											
1207												
1208	General Statistics											
1209					Number of Valid Data	16			Number of Detected Data			13
1210					Number of Distinct Detected Data	9			Number of Non-Detect Data			3
1211									Percent Non-Detects			18.75%
1212												
1213	Raw Statistics						Log-transformed Statistics					
1214					Minimum Detected	0.0099			Minimum Detected			-4.615
1215					Maximum Detected	0.096			Maximum Detected			-2.343
1216					Mean of Detected	0.0275			Mean of Detected			-3.768
1217					SD of Detected	0.0218			SD of Detected			0.564
1218					Minimum Non-Detect	0.086			Minimum Non-Detect			-2.453
1219					Maximum Non-Detect	0.094			Maximum Non-Detect			-2.364
1220												
1221	Note: Data have multiple DLs - Use of KM Method is recommended								Number treated as Non-Detect			15
1222	For all methods (except KM, DL/2, and ROS Methods),								Number treated as Detected			1
1223	Observations < Largest ND are treated as NDs								Single DL Non-Detect Percentage			93.75%
1224												
1225	UCL Statistics											
1226	Normal Distribution Test with Detected Values Only						Lognormal Distribution Test with Detected Values Only					
1227					Shapiro Wilk Test Statistic	0.611			Shapiro Wilk Test Statistic			0.869
1228					5% Shapiro Wilk Critical Value	0.866			5% Shapiro Wilk Critical Value			0.866
1229	Data not Normal at 5% Significance Level						Data appear Lognormal at 5% Significance Level					
1230												
1231	Assuming Normal Distribution						Assuming Lognormal Distribution					
1232					DL/2 Substitution Method				DL/2 Substitution Method			
1233					Mean	0.0307			Mean			-3.645
1234					SD	0.0207			SD			0.57
1235					95% DL/2 (t) UCL	0.0398			95% H-Stat (DL/2) UCL			0.042
1236												
1237					Maximum Likelihood Estimate(MLE) Method	N/A			Log ROS Method			
1238	MLE method failed to converge properly								Mean in Log Scale			-3.781
1239									SD in Log Scale			0.505
1240									Mean in Original Scale			0.0264
1241									SD in Original Scale			0.0196
1242									95% t UCL			0.035
1243									95% Percentile Bootstrap UCL			0.0357
1244									95% BCA Bootstrap UCL			0.0384
1245									95% H-UCL			0.0339
1246												
1247	Gamma Distribution Test with Detected Values Only						Data Distribution Test with Detected Values Only					
1248					k star (bias corrected)	2.36	Data appear Lognormal at 5% Significance Level					
1249					Theta Star	0.0117						
1250					nu star	61.35						

	A	B	C	D	E	F	G	H	I	J	K	L
1251												
1252					A-D Test Statistic	1.003			**Nonparametric Statistics**			
1253					5% A-D Critical Value	0.739					Kaplan-Meier (KM) Method	
1254					K-S Test Statistic	0.739					Mean	0.0265
1255					5% K-S Critical Value	0.238					SD	0.0192
1256			**Data not Gamma Distributed at 5% Significance Level**								SE of Mean	0.00508
1257											95% KM (t) UCL	0.0354
1258			**Assuming Gamma Distribution**								95% KM (z) UCL	0.0348
1259					Gamma ROS Statistics using Extrapolated Data						95% KM (jackknife) UCL	0.0353
1260					Minimum	0.0099					95% KM (bootstrap t) UCL	0.0429
1261					Maximum	0.096					95% KM (BCA) UCL	0.0351
1262					Mean	0.0276					95% KM (Percentile Bootstrap) UCL	0.0349
1263					Median	0.0277					95% KM (Chebyshev) UCL	0.0486
1264					SD	0.0195					97.5% KM (Chebyshev) UCL	0.0582
1265					k star	3.015					99% KM (Chebyshev) UCL	0.077
1266					Theta star	0.00914						
1267					Nu star	96.47			**Potential UCLs to Use**			
1268					AppChi2	74.82					95% KM (Chebyshev) UCL	0.0486
1269					95% Gamma Approximate UCL (Use when n >= 40)	0.0355						
1270					95% Adjusted Gamma UCL (Use when n < 40)	0.0366						
1271	**Note: DL/2 is not a recommended method.**											
1272												
1273			**Note: Suggestions regarding the selection of a 95% UCL are provided to help the user to select the most appropriate 95% UCL.**									
1274			**These recommendations are based upon the results of the simulation studies summarized in Singh, Maichle, and Lee (2006).**									
1275			**For additional insight, the user may want to consult a statistician.**									
1276												
1277												
1278	**Result (phenanthrene)**											
1279												
1280					**General Statistics**							
1281					Number of Valid Data	28					Number of Detected Data	5
1282					Number of Distinct Detected Data	5					Number of Non-Detect Data	23
1283											Percent Non-Detects	82.14%
1284												
1285			**Raw Statistics**				**Log-transformed Statistics**					
1286					Minimum Detected	0.023					Minimum Detected	-3.772
1287					Maximum Detected	0.21					Maximum Detected	-1.561
1288					Mean of Detected	0.0766					Mean of Detected	-2.893
1289					SD of Detected	0.0766					SD of Detected	0.855
1290					Minimum Non-Detect	0.069					Minimum Non-Detect	-2.674
1291					Maximum Non-Detect	0.15					Maximum Non-Detect	-1.897
1292												
1293	Note: Data have multiple DLs - Use of KM Method is recommended										Number treated as Non-Detect	27
1294	For all methods (except KM, DL/2, and ROS Methods),										Number treated as Detected	1
1295	Observations < Largest ND are treated as NDs										Single DL Non-Detect Percentage	96.43%
1296												
1297			**Warning: There are only 5 Detected Values in this data**									
1298			**Note: It should be noted that even though bootstrap may be performed on this data set**									
1299			**the resulting calculations may not be reliable enough to draw conclusions**									
1300												

	A	B	C	D	E	F	G	H	I	J	K	L
1301	It is recommended to have 10-15 or more distinct observations for accurate and meaningful results.											
1302												
1303												
1304	UCL Statistics											
1305	Normal Distribution Test with Detected Values Only						Lognormal Distribution Test with Detected Values Only					
1306					Shapiro Wilk Test Statistic	0.754				Shapiro Wilk Test Statistic		0.937
1307					5% Shapiro Wilk Critical Value	0.762				5% Shapiro Wilk Critical Value		0.762
1308	Data not Normal at 5% Significance Level						Data appear Lognormal at 5% Significance Level					
1309												
1310	Assuming Normal Distribution						Assuming Lognormal Distribution					
1311					DL/2 Substitution Method					DL/2 Substitution Method		
1312					Mean	0.0465				Mean		-3.182
1313					SD	0.0342				SD		0.403
1314					95% DL/2 (t) UCL	0.0576				95% H-Stat (DL/2) UCL		0.0521
1315												
1316					Maximum Likelihood Estimate(MLE) Method	N/A				Log ROS Method		
1317	MLE method failed to converge properly									Mean in Log Scale		-3.157
1318										SD in Log Scale		0.487
1319										Mean in Original Scale		0.0489
1320										SD in Original Scale		0.0352
1321										95% t UCL		0.0602
1322										95% Percentile Bootstrap UCL		0.0606
1323										95% BCA Bootstrap UCL		0.0679
1324										95% H-UCL		0.0574
1325												
1326	Gamma Distribution Test with Detected Values Only						Data Distribution Test with Detected Values Only					
1327					k star (bias corrected)	0.809	Data appear Gamma Distributed at 5% Significance Level					
1328					Theta Star	0.0946						
1329					nu star	8.094						
1330												
1331					A-D Test Statistic	0.404	Nonparametric Statistics					
1332					5% A-D Critical Value	0.686				Kaplan-Meier (KM) Method		
1333					K-S Test Statistic	0.686				Mean		0.0492
1334					5% K-S Critical Value	0.361				SD		0.0353
1335	Data appear Gamma Distributed at 5% Significance Level									SE of Mean		0.0114
1336										95% KM (t) UCL		0.0686
1337	Assuming Gamma Distribution									95% KM (z) UCL		0.068
1338					Gamma ROS Statistics using Extrapolated Data					95% KM (jackknife) UCL		0.0704
1339					Minimum	0.000001				95% KM (bootstrap t) UCL		0.073
1340					Maximum	0.21				95% KM (BCA) UCL		0.0705
1341					Mean	0.0577				95% KM (Percentile Bootstrap) UCL		0.0686
1342					Median	0.0515				95% KM (Chebyshev) UCL		0.0989
1343					SD	0.0459				97.5% KM (Chebyshev) UCL		0.12
1344					k star	0.589				99% KM (Chebyshev) UCL		0.163
1345					Theta star	0.098						
1346					Nu star	32.98	Potential UCLs to Use					
1347					AppChi2	20.85				95% KM (t) UCL		0.0686
1348					95% Gamma Approximate UCL (Use when n >= 40)	0.0913						
1349					95% Adjusted Gamma UCL (Use when n < 40)	0.0939						
1350	Note: DL/2 is not a recommended method.											

	A	B	C	D	E	F	G	H	I	J	K	L
1351												
1352	Note: Suggestions regarding the selection of a 95% UCL are provided to help the user to select the most appropriate 95% UCL.											
1353	These recommendations are based upon the results of the simulation studies summarized in Singh, Maichle, and Lee (2006).											
1354	For additional insight, the user may want to consult a statistician.											
1355												
1356												
1357	Result (pyrene)											
1358												
1359	General Statistics											
1360					Number of Valid Data	28			Number of Detected Data			9
1361					Number of Distinct Detected Data	8			Number of Non-Detect Data			19
1362									Percent Non-Detects			67.86%
1363												
1364	Raw Statistics						Log-transformed Statistics					
1365					Minimum Detected	0.019			Minimum Detected			-3.963
1366					Maximum Detected	0.64			Maximum Detected			-0.446
1367					Mean of Detected	0.258			Mean of Detected			-1.826
1368					SD of Detected	0.231			SD of Detected			1.16
1369					Minimum Non-Detect	0.069			Minimum Non-Detect			-2.674
1370					Maximum Non-Detect	0.15			Maximum Non-Detect			-1.897
1371												
1372	Note: Data have multiple DLs - Use of KM Method is recommended								Number treated as Non-Detect			24
1373	For all methods (except KM, DL/2, and ROS Methods),								Number treated as Detected			4
1374	Observations < Largest ND are treated as NDs								Single DL Non-Detect Percentage			85.71%
1375												
1376	Warning: There are only 9 Detected Values in this data											
1377	Note: It should be noted that even though bootstrap may be performed on this data set											
1378	the resulting calculations may not be reliable enough to draw conclusions											
1379												
1380	It is recommended to have 10-15 or more distinct observations for accurate and meaningful results.											
1381												
1382												
1383	UCL Statistics											
1384	Normal Distribution Test with Detected Values Only						Lognormal Distribution Test with Detected Values Only					
1385					Shapiro Wilk Test Statistic	0.858			Shapiro Wilk Test Statistic			0.938
1386					5% Shapiro Wilk Critical Value	0.829			5% Shapiro Wilk Critical Value			0.829
1387	Data appear Normal at 5% Significance Level						Data appear Lognormal at 5% Significance Level					
1388												
1389	Assuming Normal Distribution						Assuming Lognormal Distribution					
1390					DL/2 Substitution Method				DL/2 Substitution Method			
1391					Mean	0.111			Mean			-2.779
1392					SD	0.163			SD			0.938
1393					95% DL/2 (t) UCL	0.163			95% H-Stat (DL/2) UCL			0.148
1394												
1395					Maximum Likelihood Estimate(MLE) Method	N/A			Log ROS Method			
1396	MLE method failed to converge properly								Mean in Log Scale			-3.001
1397									SD in Log Scale			1.119
1398									Mean in Original Scale			0.105
1399									SD in Original Scale			0.166
1400									95% t UCL			0.158

	A	B	C	D	E	F	G	H	I	J	K	L
1401											95% Percentile Bootstrap UCL	0.156
1402											95% BCA Bootstrap UCL	0.175
1403											95% H-UCL	0.163
1404												
1405				**Gamma Distribution Test with Detected Values Only**					**Data Distribution Test with Detected Values Only**			
1406					k star (bias corrected)	0.873			**Data appear Normal at 5% Significance Level**			
1407					Theta Star	0.296						
1408					nu star	15.71						
1409												
1410					A-D Test Statistic	0.246			**Nonparametric Statistics**			
1411					5% A-D Critical Value	0.74					Kaplan-Meier (KM) Method	
1412					K-S Test Statistic	0.74					Mean	0.106
1413					5% K-S Critical Value	0.286					SD	0.163
1414				**Data appear Gamma Distributed at 5% Significance Level**							SE of Mean	0.0334
1415											95% KM (t) UCL	0.163
1416				**Assuming Gamma Distribution**							95% KM (z) UCL	0.161
1417					Gamma ROS Statistics using Extrapolated Data						95% KM (jackknife) UCL	0.164
1418					Minimum	0.000001					95% KM (bootstrap t) UCL	0.205
1419					Maximum	0.64					95% KM (BCA) UCL	0.206
1420					Mean	0.103					95% KM (Percentile Bootstrap) UCL	0.191
1421					Median	0.0524					95% KM (Chebyshev) UCL	0.252
1422					SD	0.17					97.5% KM (Chebyshev) UCL	0.315
1423					k star	0.164					99% KM (Chebyshev) UCL	0.439
1424					Theta star	0.628						
1425					Nu star	9.162			**Potential UCLs to Use**			
1426					AppChi2	3.425					95% KM (t) UCL	0.163
1427					95% Gamma Approximate UCL (Use when n >= 40)	0.275					95% KM (Percentile Bootstrap) UCL	0.191
1428					95% Adjusted Gamma UCL (Use when n < 40)	0.293						
1429	**Note: DL/2 is not a recommended method.**											
1430												
1431				**Note: Suggestions regarding the selection of a 95% UCL are provided to help the user to select the most appropriate 95% UCL.**								
1432				**These recommendations are based upon the results of the simulation studies summarized in Singh, Maichle, and Lee (2006).**								
1433				**For additional insight, the user may want to consult a statistician.**								
1434												
1435												
1436	**Result (xylenes (total))**											
1437												
1438					**General Statistics**							
1439					Number of Valid Data	28					Number of Detected Data	5
1440					Number of Distinct Detected Data	5					Number of Non-Detect Data	23
1441											Percent Non-Detects	82.14%
1442												
1443				**Raw Statistics**					**Log-transformed Statistics**			
1444					Minimum Detected	0.0023					Minimum Detected	-6.075
1445					Maximum Detected	0.055					Maximum Detected	-2.9
1446					Mean of Detected	0.0143					Mean of Detected	-5.033
1447					SD of Detected	0.0228					SD of Detected	1.245
1448					Minimum Non-Detect	0.0042					Minimum Non-Detect	-5.473
1449					Maximum Non-Detect	0.015					Maximum Non-Detect	-4.2
1450												

	A	B	C	D	E	F	G	H	I	J	K	L
1451	Note: Data have multiple DLs - Use of KM Method is recommended										Number treated as Non-Detect	27
1452	For all methods (except KM, DL/2, and ROS Methods),										Number treated as Detected	1
1453	Observations < Largest ND are treated as NDs										Single DL Non-Detect Percentage	96.43%
1454												
1455	**Warning: There are only 5 Detected Values in this data**											
1456	**Note: It should be noted that even though bootstrap may be performed on this data set**											
1457	**the resulting calculations may not be reliable enough to draw conclusions**											
1458												
1459	**It is recommended to have 10-15 or more distinct observations for accurate and meaningful results.**											
1460												
1461												
1462	**UCL Statistics**											
1463	**Normal Distribution Test with Detected Values Only**						**Lognormal Distribution Test with Detected Values Only**					
1464	Shapiro Wilk Test Statistic					0.611	Shapiro Wilk Test Statistic					0.815
1465	5% Shapiro Wilk Critical Value					0.762	5% Shapiro Wilk Critical Value					0.762
1466	**Data not Normal at 5% Significance Level**						**Data appear Lognormal at 5% Significance Level**					
1467												
1468	**Assuming Normal Distribution**						**Assuming Lognormal Distribution**					
1469	DL/2 Substitution Method						DL/2 Substitution Method					
1470	Mean					0.00476	Mean					-5.797
1471	SD					0.00992	SD					0.647
1472	95% DL/2 (t) UCL					0.00795	95% H-Stat (DL/2) UCL					0.00484
1473												
1474	Maximum Likelihood Estimate(MLE) Method					N/A	Log ROS Method					
1475	**MLE method failed to converge properly**						Mean in Log Scale					-5.66
1476							SD in Log Scale					0.667
1477							Mean in Original Scale					0.00523
1478							SD in Original Scale					0.00984
1479							95% t UCL					0.0084
1480							95% Percentile Bootstrap UCL					0.00883
1481							95% BCA Bootstrap UCL					0.0108
1482							95% H-UCL					0.00569
1483												
1484	**Gamma Distribution Test with Detected Values Only**						**Data Distribution Test with Detected Values Only**					
1485	k star (bias corrected)					0.439	**Data appear Lognormal at 5% Significance Level**					
1486	Theta Star					0.0325						
1487	nu star					4.387						
1488												
1489	A-D Test Statistic					0.803	**Nonparametric Statistics**					
1490	5% A-D Critical Value					0.698	Kaplan-Meier (KM) Method					
1491	K-S Test Statistic					0.698	Mean					0.00521
1492	5% K-S Critical Value					0.367	SD					0.00963
1493	**Data not Gamma Distributed at 5% Significance Level**						SE of Mean					0.00208
1494							95% KM (t) UCL					0.00875
1495	**Assuming Gamma Distribution**						95% KM (z) UCL					0.00863
1496	Gamma ROS Statistics using Extrapolated Data						95% KM (jackknife) UCL					0.00854
1497	Minimum					0.000001	95% KM (bootstrap t) UCL					0.0201
1498	Maximum					0.055	95% KM (BCA) UCL					0.0105
1499	Mean					0.00536	95% KM (Percentile Bootstrap) UCL					0.0092
1500	Median					0.00188	95% KM (Chebyshev) UCL					0.0143

	A	B	C	D	E	F	G	H	I	J	K	L
1501					SD	0.0105				97.5% KM (Chebyshev) UCL		0.0182
1502					k star	0.286				99% KM (Chebyshev) UCL		0.0259
1503					Theta star	0.0187						
1504					Nu star	16.04			**Potential UCLs to Use**			
1505					AppChi2	7.99				95% KM (BCA) UCL		0.0105
1506				95% Gamma Approximate UCL (Use when n >= 40)		0.0108						
1507				95% Adjusted Gamma UCL (Use when n < 40)		0.0113						
1508	**Note: DL/2 is not a recommended method.**											
1509												
1510	**Note: Suggestions regarding the selection of a 95% UCL are provided to help the user to select the most appropriate 95% UCL.**											
1511	**These recommendations are based upon the results of the simulation studies summarized in Singh, Maichle, and Lee (2006).**											
1512	**For additional insight, the user may want to consult a statistician.**											
1513												

Appendix I

Vapor Intrusion Model for Soil – Site Worker

Table I-1
Summary of Input Parameters
USEPA Vapor Intrusion Model for Soil
Site Worker Receptor
SWMU 39
Fort Stewart, Georgia

Chemical CAS No. (numbers only, no dashes)	Initial Soil Concentration C_R (mg/kg)	Chemical
83329	2.00E+01	Acenaphthene
208968	1.03E+02	Acenaphthylene
67641	4.36E+01	Acetone
120127	6.65E+01	Anthracene
100527	1.30E+02	Benzaldehyde
71432	9.10E-01	Benzene
98828	1.30E+00	Benzene,1-methylethyl
92524	1.20E+01	1,1'-Biphenyl
75150	1.30E+00	Carbon Disulfide
106934	4.30E-01	1,2-Dibromoethane
156592	1.60E+00	cis-1,2-Dichloroethene
100414	6.80E+00	Ethylbenzene
86737	1.10E+02	Fluorene
7439976	4.86E+01	Mercury
108872	1.00E+00	Methylcyclohexane
91576	5.50E+01	2-Methylnaphthalene
108101	1.80E+00	4-Methyl-2-pentanone
91203	1.10E+01	Naphthalene
85018	6.86E+01	Phenanthrene
129000	1.63E+02	Pyrene
108883	1.10E+01	Toluene
79016	3.00E+00	Trichloroethene
1330207	1.05E+01	Xylene (total)

ENTER Average soil temperature, T_S (^oC)	ENTER Depth below grade to bottom of enclosed space floor, L_F (cm)	ENTER Depth below grade to top of contamination, L_t (cm)	ENTER Depth below grade to bottom of contamination, (enter value of 0 if value is unknown) L_b (cm)	ENTER Thickness of soil stratum A, h_A (cm)	ENTER Thickness of soil stratum B, (Enter value or 0) h_B (cm)	ENTER of soil stratum C, (Enter value or 0) h_C (cm)	ENTER Soil SCS soil type (used to estimate soil vapor permeability)	OR	ENTER User-defined stratum A soil vapor permeability, k_v (cm^2)
				Totals must add up to value of L_t (cell G45)					
19	15	120.96	0	120.96			SIC		

ENTER Stratum A SCS soil type (Lookup Soil Parameters)	ENTER Stratum A soil dry bulk density, r_b^A (g/cm^3)	ENTER Stratum A soil total porosity, n^A (unitless)	ENTER Stratum A soil water-filled porosity, q_w^A (cm^3/cm^3)	ENTER Stratum A soil organic carbon fraction, f_{oc}^A (unitless)	ENTER Stratum B SCS soil type (Lookup Soil Parameters)	ENTER Stratum B soil dry bulk density, r_b^B (g/cm^3)	ENTER Stratum B soil total porosity, n^B (unitless)	ENTER Stratum B soil water-filled porosity, q_w^B (cm^3/cm^3)	ENTER Stratum B soil organic carbon fraction, f_{oc}^B (unitless)
SIC	1.38	0.48	0.22	0.002					

ENTER Enclosed space floor thickness, L_{crack} (cm)	ENTER Soil-bldg. pressure differential, DP ($g/cm\text{-}s^2$)	ENTER Enclosed space floor length, L_B (cm)	ENTER Enclosed space floor width, W_B (cm)	ENTER Enclosed space height, H_B (cm)	ENTER Floor-wall seam crack width, w (cm)	ENTER Indoor air exchange rate, ER (1/h)	ENTER Average vapor flow rate into bldg. OR Leave blank to calculate Q_{soil} (L/m)
10	40	1000	1000	244	0.1	0.25	

ENTER Averaging time for carcinogens, AT_C (yrs)	ENTER Averaging time for noncarcinogens, AT_{NC} (yrs)	ENTER Exposure duration, ED (yrs)	ENTER Exposure frequency, EF (days/yr)	ENTER Target risk for carcinogens, TR (unitless)	ENTER Target hazard quotient for noncarcinogens, THQ (unitless)	ENTER Exposure Time ET (hrs/days)
70	25	25	250	1.0E-06	1	8

Table I-2
Summary of Chemical Properties
USEPA Vapor Intrusion Model for Soil
Site Worker Receptor
SWMU 39
Fort Stewart, Georgia

Constituent	Diffusivity in air, D_a (cm^2/s)	Diffusivity in water, D_w (cm^2/s)	Henry's law constant at reference temperature, H ($atm\text{-}m^3/mol$)	Henry's law constant reference temperature, T_R (^oC)	Enthalpy of vaporization at the normal boiling point, $DH_{v,b}$ (cal/mol)	Normal boiling point, T_B (^oK)	Critical temperature, T_C (^oK)	Organic carbon partition coefficient, K_{oc} (cm^3/g)	Pure component water solubility, S (mg/L)	Reference conc., RfC (mg/m^3)		Physical state at soil temperature, (S,L,G)
Acenaphthene	5.06E-02	8.33E-06	1.84E-04	25	12,155	550.54	803.15	5.03E+03	3.90E+00	NA		S
Acenaphthylene	4.39E-02	7.53E-06	1.13E-04	25	13,410	553.15	829.73	3.09E+03	1.61E+01	NA		L
Acetone	1.06E-01	1.15E-05	3.50E-05	25	6,955	329.20	508.10	2.36E+00	1.00E+06	3.1E+01	A	L
Anthracene	3.90E-02	7.85E-06	5.56E-05	25	16,510	613.05	919.58	1.64E+04	4.34E-02	NA		L
Benzaldehyde	7.44E-02	9.46E-06	2.67E-05	25	9,760	452.00	695.00	1.11E+01	6.95E+03	NA		L
Benzene	8.95E-02	1.03E-05	5.55E-03	25	7,342	353.24	562.16	1.46E+02	1.79E+03	3.0E-02	I	L
Benzene,1-methylethyl	6.03E-02	7.86E-06	1.15E-02	25	10,335	425.56	631.10	6.98E+02	6.13E+01	4.0E-01	I	L
1,1'-Biphenyl	4.71E-02	7.56E-06	3.08E-04	25	10,890	529.10	789.00	5.13E+03	6.94E+00	4.0E-04	X	S
Carbon Disulfide	1.06E-01	1.30E-05	1.44E-02	25	6,391	319.00	552.00	2.17E+01	2.16E+03	7.0E-01	I	L
1,2-Dibromoethane	4.30E-02	1.04E-05	6.50E-04	25	8,310	404.60	583.00	3.96E+01	3.91E+03	9.0E-03	I	L
cis-1,2-Dichloroethene	8.84E-02	1.13E-05	4.08E-03	25	7,192	333.65	544.00	3.96E+01	6.41E+03	NA		L
Ethylbenzene	6.85E-02	8.46E-06	7.88E-03	25	8,501	409.34	617.20	4.46E+02	1.69E+02	1.0E+00	I	L
Fluorene	4.40E-02	7.89E-06	9.62E-05	25	12,666	570.44	870.00	9.16E+03	1.69E+00	NA		S
Mercury	3.07E-02	6.30E-06	1.14E-02	25	14,127	629.88	1750.00	5.20E+01	6.00E-02	3.0E-04	I	L
Methylcyclohexane [a]	7.35E-02	8.52E-06	1.03E-01	25	24,950	373.90	572.20	7.85E+01	1.40E+01	6.0E+00	I	L
2-Methylnaphthalene	5.24E-02	7.78E-06	5.18E-04	25	12,600	514.26	761.00	2.48E+03	2.46E+01	NA		S
4-Methyl-2-pentanone	6.98E-02	8.35E-06	1.38E-04	25	8,243	389.50	571.00	1.26E+01	1.90E+04	3.0E+00	I	L
Naphthalene	6.05E-02	8.38E-06	4.40E-04	25	10,373	491.14	748.40	1.54E+03	3.10E+01	3.0E-03	I	S
Phenanthrene	5.43E-02	5.85E-06	2.33E-05	25	13,340	613.15	919.73	2.97E+04	1.15E+00	NA		L
Pyrene	5.43E-02	5.85E-06	2.33E-05	25	13,340	613.15	919.73	2.97E+04	1.15E+00	NA		L
Toluene	7.78E-02	9.20E-06	6.64E-03	25	7,930	383.78	591.79	2.34E+02	5.26E+02	5.0E+00	I	L
Trichloroethene	6.87E-02	1.02E-05	9.85E-03	25	7,505	360.36	544.20	6.07E+01	1.28E+03	2.0E-03	I	L
Xylene (total)	8.47E-02	9.90E-06	5.18E-03	26	8,525	413.78	620.68	3.83E+02	1.06E+02	1.0E-01	I	L

Note:
[a] Cyclohexane used as a surrogate.

Chemical-specific toxicity values were obtained from the following sources:
A Agency for Toxic Substances Disease Registry (ATDSR 2013).
I Integrated Risk Information System (IRIS) (USEPA 2013a).
X PPRTV Appendix (USEPA 2013b).

Table I-3
Intercalculations
USEPA Vapor Intrusion Model for Soil
Site Worker Receptor
SWMU 39
Fort Stewart, Georgia

Constituent	Initial soil concentration used, C_R (mg/kg)	Enthalpy of vaporization at ave. soil temperature, $DH_{v,TS}$ (cal/mol)	Henry's law constant at ave. soil temperature, H_{TS} (atm-m^3/mol)	Henry's law constant at ave. soil temperature, H'_{TS} (unitless)	Vapor viscosity at ave. soil temperature, m_{TS} (g/cm-s)	Stratum A effective diffusion coefficient, D^{eff}_A (cm^2/s)	Total overall effective diffusion coefficient, D^{eff}_T (cm^2/s)	Source vapor conc., C_{source} (mg/m^3)	Crack effective diffusion coefficient, D^{crack} (cm^2/s)	Exponent of equivalent foundation Peclet number, exp(Pe^f) (unitless)	Reference conc., RfC (mg/m^3)
Acenaphthene	20	16,013	1.06E-04	4.41E-03	1.78E-04	2.68E-03	2.68E-03	8.63E+00	2.68E-03	1.26E+05	NA
Acenaphthylene	0	17,232	6.22E-05	2.59E-03	1.78E-04	2.35E-03	2.35E-03	0.00E+00	2.35E-03	6.26E+05	NA
Acetone	44	7,447	2.70E-05	1.13E-03	1.78E-04	5.76E-03	5.76E-03	3.05E+02	5.76E-03	2.33E+02	3.1E+01
Anthracene	67	21,634	2.63E-05	1.10E-03	1.78E-04	2.21E-03	2.21E-03	2.22E+00	2.21E-03	1.49E+06	NA
Benzaldehyde	130	11,739	1.78E-05	7.41E-04	1.78E-04	4.20E-03	4.20E-03	5.39E+02	4.20E-03	1.79E+03	NA
Benzene	1	8,030	4.20E-03	1.75E-01	1.78E-04	4.65E-03	4.65E-03	3.31E+02	4.65E-03	8.64E+02	3.0E-02
Benzene,1-methylethyl	1	12,518	7.45E-03	3.11E-01	1.78E-04	3.13E-03	3.13E-03	2.51E+02	3.13E-03	2.29E+04	4.0E-01
1,1'-Biphenyl	12	13,933	1.90E-04	7.93E-03	1.78E-04	2.47E-03	2.47E-03	9.13E+00	2.47E-03	3.40E+05	4.0E-04
Carbon Disulfide	1	6,612	1.15E-02	4.78E-01	1.78E-04	5.52E-03	5.52E-03	2.13E+03	5.52E-03	2.95E+02	7.0E-01
1,2-Dibromoethane	0	10,092	4.58E-04	1.91E-02	1.78E-04	2.25E-03	2.25E-03	3.43E+01	2.25E-03	1.18E+06	9.0E-03
cis-1,2-Dichloroethene	2	7,643	3.13E-03	1.31E-01	1.78E-04	4.59E-03	4.59E-03	8.01E+02	4.59E-03	9.41E+02	NA
Ethylbenzene	7	10,052	5.56E-03	2.32E-01	1.78E-04	3.55E-03	3.55E-03	1.44E+03	3.55E-03	6.92E+03	1.0E+00
Fluorene	110	16,143	5.50E-05	2.29E-03	1.78E-04	2.37E-03	2.37E-03	1.37E+01	2.37E-03	5.66E+05	NA
Mercury	49	15,289	6.72E-03	2.80E-01	1.78E-04	1.59E-03	1.59E-03	2.61E+02	1.59E-03	3.66E+08	3.0E-04
Methylcyclohexane	1	28,325	3.85E-02	1.61E+00	1.78E-04	3.81E-03	3.81E-03	2.58E+03	3.81E-03	3.79E+03	6.0E+00
2-Methylnaphthalene	55	16,123	2.96E-04	1.24E-02	1.78E-04	2.74E-03	2.74E-03	1.33E+02	2.74E-03	9.68E+04	NA
4-Methyl-2-pentanone	2	9,741	9.85E-05	4.11E-03	1.78E-04	3.67E-03	3.67E-03	4.05E+01	3.67E-03	5.18E+03	3.0E+00
Naphthalene	11	12,820	2.82E-04	1.18E-02	1.78E-04	3.16E-03	3.16E-03	3.99E+01	3.16E-03	2.10E+04	3.0E-03
Phenanthrene	69	17,481	1.27E-05	5.30E-04	1.78E-04	3.11E-03	3.11E-03	6.11E-01	3.11E-03	2.46E+04	NA
Pyrene	163	17,481	1.27E-05	5.30E-04	1.78E-04	3.11E-03	3.11E-03	7.94E-01	3.11E-03	2.46E+04	NA
Toluene	11	9,056	4.85E-03	2.02E-01	1.78E-04	4.04E-03	4.04E-03	3.36E+03	4.04E-03	2.39E+03	5.0E+00
Trichloroethene	3	8,445	7.35E-03	3.07E-01	1.78E-04	3.56E-03	3.56E-03	2.73E+03	3.56E-03	6.75E+03	2.0E-03
Xylene (total)	11	10,150	3.44E-03	1.44E-01	1.78E-04	4.40E-03	4.40E-03	1.59E+03	4.40E-03	1.27E+03	1.0E-01

Table I-4
Summary of Results
USEPA Vapor Intrusion Model for Soil
Site Worker Receptor
SWMU 39
Fort Stewart, Georgia

Constituent	Soil saturation conc., C_{sat} (mg/kg)	Incremental risk from vapor intrusion to indoor air, carcinogen (unitless)	Hazard quotient from vapor intrusion to indoor air, noncarcinogen (unitless)
Acenaphthene	3.98E+04	NA	NA
Acenaphthylene	1.02E+05	NA	NA
Acetone	1.61E+08	NA	1.6E-07
Anthracene	1.43E+03	NA	NA
Benzaldehyde	1.24E+06	NA	NA
Benzene	8.62E+05	1.5E-08	1.8E-04
Benzene,1-methylethyl	9.88E+04	NA	1.0E-05
1,1'-Biphenyl	7.23E+04	NA	3.7E-04
Carbon Disulfide	6.30E+05	NA	4.9E-05
1,2-Dibromoethane	9.36E+05	1.2E-07	6.2E-05
cis-1,2-Dichloroethene	1.67E+06	NA	NA
Ethylbenzene	1.85E+05	2.1E-08	2.3E-05
Fluorene	3.12E+04	NA	NA
Mercury	3.13E+03	NA	1.4E-02
Methylcyclohexane	8.71E+03	NA	7.0E-06
2-Methylnaphthalene	1.26E+05	NA	NA
4-Methyl-2-pentanone	3.47E+06	NA	2.2E-07
Naphthalene	1.01E+05	7.8E-09	2.2E-04
Phenanthrene	6.85E+04	NA	NA
Pyrene	1.25E+05	NA	NA
Toluene	3.49E+05	NA	1.1E-05
Trichloroethene	4.31E+05	6.5E-08	2.2E-02
Xylene (total)	1.01E+05	NA	2.6E-04
Total Risk and Hazard		**2E-07**	**0.04**

ARCADIS MALCOLM PIRNIE

Appendix J

Vapor Intrusion Model for Soil – Resident

Table J-1
Summary of Input Parameters
USEPA Vapor Intrusion Model for Soil
Resident Receptor
SWMU 39
Fort Stewart, Georgia

Chemical CAS No. (numbers only, no dashes)	Initial Soil Concentration C_R (mg/kg)	Chemical
83329	2.00E+01	Acenaphthene
208968	1.03E+02	Acenaphthylene
67641	4.35E+01	Acetone
120127	6.65E+01	Anthracene
100527	1.30E+02	Benzaldehyde
71432	9.10E-01	Benzene
98828	1.30E+00	Benzene,1-methylethyl
92524	1.20E+01	1,1'-Biphenyl
75150	1.30E+00	Carbon Disulfide
106934	4.30E-01	1,2-Dibromoethane
156592	1.60E+00	cis-1,2-Dichloroethene
100414	6.80E+00	Ethylbenzene
86737	1.10E+02	Fluorene
7439976	4.86E+01	Mercury
108872	1.00E+00	Methylcyclohexane
91576	5.50E+01	2-Methylnaphthalene
108101	1.80E+00	4-Methyl-2-pentanone
91203	1.10E+01	Naphthalene
85018	6.86E+01	Phenanthrene
129000	1.63E+02	Pyrene
108883	1.10E+01	Toluene
79016	3.00E+00	Trichloroethene
1330207	1.05E+01	Xylene (total)

ENTER Average soil temperature, T_S (^oC)	ENTER Depth below grade to bottom of enclosed space floor, L_F (cm)	ENTER Depth below grade to top of contamination, L_t (cm)	ENTER Depth below grade to bottom of contamination, (enter value of 0 if value is unknown) L_b (cm)	ENTER Totals must add up to value of L_t (cell G45) Thickness of soil stratum A, h_A (cm)	ENTER Thickness of soil stratum B, (Enter value or 0) h_B (cm)	ENTER of soil stratum C, (Enter value or 0) h_C (cm)	ENTER Soil SCS soil type (used to estimate soil vapor permeability)	OR	ENTER User-defined stratum A soil vapor permeability, k_v (cm^2)
19	15	120.96	0	120.96			SIC		

ENTER Stratum A SCS soil type (Lookup Soil Parameters)	ENTER Stratum A soil dry bulk density, r_b^A (g/cm^3)	ENTER Stratum A soil total porosity, n^A (unitless)	ENTER Stratum A soil water-filled porosity, q_w^A (cm^3/cm^3)	ENTER Stratum A soil organic carbon fraction, f_{oc}^A (unitless)	ENTER Stratum B SCS soil type (Lookup Soil Parameters)	ENTER Stratum B soil dry bulk density, r_b^B (g/cm^3)	ENTER Stratum B soil total porosity, n^B (unitless)	ENTER Stratum B soil water-filled porosity, q_w^B (cm^3/cm^3)	ENTER Stratum B soil organic carbon fraction, f_{oc}^B (unitless)
SIC	1.38	0.48	0.22	0.002					

ENTER Enclosed space floor thickness, L_{crack} (cm)	ENTER Soil-bldg. pressure differential, DP ($g/cm\text{-}s^2$)	ENTER Enclosed space floor length, L_B (cm)	ENTER Enclosed space floor width, W_B (cm)	ENTER Enclosed space height, H_B (cm)	ENTER Floor-wall seam crack width, w (cm)	ENTER Indoor air exchange rate, ER (1/h)	ENTER Average vapor flow rate into bldg. OR Leave blank to calculate Q_{soil} (L/m)
10	40	1000	1000	244	0.1	0.25	

ENTER Averaging time for carcinogens, AT_C (yrs)	ENTER Averaging time for noncarcinogens, AT_{NC} (yrs)	ENTER Exposure duration, ED (yrs)	ENTER Exposure frequency, EF (days/yr)	ENTER Target risk for carcinogens, TR (unitless)	ENTER Target hazard quotient for noncarcinogens, THQ (unitless)	ENTER Exposure Time ET (hrs/days)
70	30	30	350	1.0E-06	1	24

Table J-2
Summary of Chemical Properties
USEPA Vapor Intrusion Model for Soil
Resident Receptor
SWMU 39
Fort Stewart, Georgia

Constituent	Diffusivity in air, D_a (cm^2/s)	Diffusivity in water, D_w (cm^2/s)	Henry's law constant at reference temperature, H ($atm\text{-}m^3/mol$)	Henry's law constant reference temperature, T_R (^oC)	Enthalpy of vaporization at the normal boiling point, $DH_{v,b}$ (cal/mol)	Normal boiling point, T_B (^oK)	Critical temperature, T_C (^oK)	Organic carbon partition coefficient, K_{oc} (cm^3/g)	Pure component water solubility, S (mg/L)	Reference conc., RfC (mg/m^3)		Physical state at soil temperature, (S,L,G)
Acenaphthene	5.06E-02	8.33E-06	1.84E-04	25	12,155	550.54	803.15	5.03E+03	3.90E+00	NA		S
Acenaphthylene	4.39E-02	7.53E-06	1.13E-04	25	13,410	553.15	829.73	3.09E+03	1.61E+01	NA		L
Acetone	1.06E-01	1.15E-05	3.50E-05	25	6,955	329.20	508.10	2.36E+00	1.00E+06	3.1E+01	A	L
Anthracene	3.90E-02	7.85E-06	5.56E-05	25	16,510	613.05	919.58	1.64E+04	4.34E-02	NA		L
Benzaldehyde	7.44E-02	9.46E-06	2.67E-05	25	9,760	452.00	695.00	1.11E+01	6.95E+03	NA		L
Benzene	8.95E-02	1.03E-05	5.55E-03	25	7,342	353.24	562.16	1.46E+02	1.79E+03	3.0E-02	I	L
Benzene,1-methylethyl	6.03E-02	7.86E-06	1.15E-02	25	10,335	425.56	631.10	6.98E+02	6.13E+01	4.0E-01	I	L
1,1'-Biphenyl	4.71E-02	7.56E-06	3.08E-04	25	10,890	529.10	789.00	5.13E+03	6.94E+00	4.0E-04	X	S
Carbon Disulfide	1.06E-01	1.30E-05	1.44E-02	25	6,391	319.00	552.00	2.17E+01	2.16E+03	7.0E-01	I	L
1,2-Dibromoethane	4.30E-02	1.04E-05	6.50E-04	25	8,310	404.60	583.00	3.96E+01	3.91E+03	9.0E-03	I	L
cis-1,2-Dichloroethene	8.84E-02	1.13E-05	4.08E-03	25	7,192	333.65	544.00	3.96E+01	6.41E+03	NA		L
Ethylbenzene	6.85E-02	8.46E-06	7.88E-03	25	8,501	409.34	617.20	4.46E+02	1.69E+02	1.0E+00	I	L
Fluorene	4.40E-02	7.89E-06	9.62E-05	25	12,666	570.44	870.00	9.16E+03	1.69E+00	NA		S
Mercury	3.07E-02	6.30E-06	1.14E-02	25	14,127	629.88	1750.00	5.20E+01	6.00E-02	3.0E-04	I	L
Methylcyclohexane [a]	7.35E-02	8.52E-06	1.03E-01	25	24,950	373.90	572.20	7.85E+01	1.40E+01	6.0E+00	I	L
2-Methylnaphthalene	5.24E-02	7.78E-06	5.18E-04	25	12,600	514.26	761.00	2.48E+03	2.46E+01	NA		S
4-Methyl-2-pentanone	6.98E-02	8.35E-06	1.38E-04	25	8,243	389.50	571.00	1.26E+01	1.90E+04	3.0E+00	I	L
Naphthalene	6.05E-02	8.38E-06	4.40E-04	25	10,373	491.14	748.40	1.54E+03	3.10E+01	3.0E-03	I	S
Phenanthrene	5.43E-02	5.85E-06	2.33E-05	25	13,340	613.15	919.73	2.97E+04	1.15E+00	NA		L
Pyrene	2.78E-02	7.25E-06	1.19E-05	25	14,370	667.95	936.00	5.43E+04	1.35E-01	NA		S
Toluene	7.78E-02	9.20E-06	6.64E-03	25	7,930	383.78	591.79	2.34E+02	5.26E+02	5.0E+00	I	L
Trichloroethene	6.87E-02	1.02E-05	9.85E-03	25	7,505	360.36	544.20	6.07E+01	1.28E+03	2.0E-03	I	L
Xylene (total)	8.47E-02	9.90E-06	5.18E-03	26	8,525	413.78	620.68	3.83E+02	1.06E+02	1.0E-01	I	L

Note:
[a] Cyclohexane is used as a surrogate.

Chemical-specific toxicity values were obtained from the following sources:
A Agency for Toxic Substances Disease Registry (ATDSR 2013).
I Integrated Risk Information System (IRIS; USEPA 2013a).
X PPRTV Appendix (USEPA 2013b).

Table J-3
Intercalculations
USEPA Vapor Intrusion Model for Soil
Resident Receptor
SWMU 39
Fort Stewart, Georgia

Constituent	Initial soil concentration used, C_R (mg/kg)	Enthalpy of vaporization at ave. soil temperature, $DH_{v,TS}$ (cal/mol)	Henry's law constant at ave. soil temperature, H_{TS} (atm-m^3/mol)	Henry's law constant at ave. soil temperature, H'_{TS} (unitless)	Vapor viscosity at ave. soil temperature, m_{TS} (g/cm-s)	Stratum A effective diffusion coefficient, D^{eff}_A (cm^2/s)	Total overall effective diffusion coefficient, D^{eff}_T (cm^2/s)	Source vapor conc., C_{source} (mg/m^3)	Crack effective diffusion coefficient, D^{crack} (cm^2/s)	Exponent of equivalent foundation Peclet number, exp(Pe^f) (unitless)	Reference conc., RfC (mg/m^3)
Acenaphthene	20	16,013	1.06E-04	4.41E-03	1.78E-04	2.68E-03	2.68E-03	8.63E+00	2.68E-03	1.26E+05	NA
Acenaphthylene	0	17,232	6.22E-05	2.59E-03	1.78E-04	2.35E-03	2.35E-03	0.00E+00	2.35E-03	6.26E+05	NA
Acetone	44	7,447	2.70E-05	1.13E-03	1.78E-04	5.76E-03	5.76E-03	3.04E+02	5.76E-03	2.33E+02	3.1E+01
Anthracene	67	21,634	2.63E-05	1.10E-03	1.78E-04	2.21E-03	2.21E-03	2.22E+00	2.21E-03	1.49E+06	NA
Benzaldehyde	130	11,739	1.78E-05	7.41E-04	1.78E-04	4.20E-03	4.20E-03	5.39E+02	4.20E-03	1.79E+03	NA
Benzene	1	8,030	4.20E-03	1.75E-01	1.78E-04	4.65E-03	4.65E-03	3.31E+02	4.65E-03	8.64E+02	3.0E-02
Benzene,1-methylethyl	1	12,518	7.45E-03	3.11E-01	1.78E-04	3.13E-03	3.13E-03	2.51E+02	3.13E-03	2.29E+04	4.0E-01
1,1'-Biphenyl	12	13,933	1.90E-04	7.93E-03	1.78E-04	2.47E-03	2.47E-03	9.13E+00	2.47E-03	3.40E+05	4.0E-04
Carbon Disulfide	1	6,612	1.15E-02	4.78E-01	1.78E-04	5.52E-03	5.52E-03	2.13E+03	5.52E-03	2.95E+02	7.0E-01
1,2-Dibromoethane	0	10,092	4.58E-04	1.91E-02	1.78E-04	2.25E-03	2.25E-03	3.43E+01	2.25E-03	1.18E+06	9.0E-03
cis-1,2-Dichloroethene	2	7,643	3.13E-03	1.31E-01	1.78E-04	4.59E-03	4.59E-03	8.01E+02	4.59E-03	9.41E+02	NA
Ethylbenzene	7	10,052	5.56E-03	2.32E-01	1.78E-04	3.55E-03	3.55E-03	1.44E+03	3.55E-03	6.92E+03	1.0E+00
Fluorene	110	16,143	5.50E-05	2.29E-03	1.78E-04	2.37E-03	2.37E-03	1.37E+01	2.37E-03	5.66E+05	NA
Methylcyclohexane [a]	49	15,289	6.72E-03	2.80E-01	1.78E-04	1.59E-03	1.59E-03	2.61E+02	1.59E-03	3.66E+08	3.0E-04
Methylcyclohexane	1	28,325	3.85E-02	1.61E+00	1.78E-04	3.81E-03	3.81E-03	2.58E+03	3.81E-03	3.79E+03	6.0E+00
2-Methylnaphthalene	55	16,123	2.96E-04	1.24E-02	1.78E-04	2.74E-03	2.74E-03	1.33E+02	2.74E-03	9.68E+04	NA
4-Methyl-2-pentanone	2	9,741	9.85E-05	4.11E-03	1.78E-04	3.67E-03	3.67E-03	4.05E+01	3.67E-03	5.18E+03	3.0E+00
Naphthalene	11	12,820	2.82E-04	1.18E-02	1.78E-04	3.16E-03	3.16E-03	3.99E+01	3.16E-03	2.10E+04	3.0E-03
Phenanthrene	69	17,481	1.27E-05	5.30E-04	1.78E-04	3.11E-03	3.11E-03	6.11E-01	3.11E-03	2.46E+04	NA
Pyrene	69	17,481	1.27E-05	5.30E-04	1.78E-04	3.11E-03	3.11E-03	6.11E-01	3.11E-03	2.46E+04	NA
Toluene	11	9,056	4.85E-03	2.02E-01	1.78E-04	4.04E-03	4.04E-03	3.36E+03	4.04E-03	2.39E+03	5.0E+00
Trichloroethene	3	8,445	7.35E-03	3.07E-01	1.78E-04	3.56E-03	3.56E-03	2.73E+03	3.56E-03	6.75E+03	2.0E-03
Xylene (total)	11	10,150	3.44E-03	1.44E-01	1.78E-04	4.40E-03	4.40E-03	1.59E+03	4.40E-03	1.27E+03	1.0E-01

Table J-4
Summary of Results
USEPA Vapor Intrusion Model for Soil
Resident Receptor
SWMU 39
Fort Stewart, Georgia

Constituent	Soil saturation conc., C_{sat} (mg/kg)	Incremental risk from vapor intrusion to indoor air, carcinogen (unitless)	Hazard quotient from vapor intrusion to indoor air, noncarcinogen (unitless)
Acenaphthene	3.98E+04	NA	NA
Acenaphthylene	1.02E+05	NA	NA
Acetone	1.61E+08	NA	6.7E-07
Anthracene	1.43E+03	NA	NA
Benzaldehyde	1.24E+06	NA	NA
Benzene	8.62E+05	7.5E-08	7.5E-04
Benzene,1-methylethyl	9.88E+04	NA	4.3E-05
1,1'-Biphenyl	7.23E+04	NA	1.6E-03
Carbon Disulfide	6.30E+05	NA	2.1E-04
1,2-Dibromoethane	9.36E+05	6.0E-07	2.6E-04
cis-1,2-Dichloroethene	1.67E+06	NA	NA
Ethylbenzene	1.85E+05	1.1E-07	9.8E-05
Fluorene	3.12E+04	NA	NA
Mercury	3.13E+03	NA	5.9E-02
Methylcyclohexane	8.71E+03	NA	2.9E-05
2-Methylnaphthalene	1.26E+05	NA	NA
4-Methyl-2-pentanone	3.47E+06	NA	9.2E-07
Naphthalene	1.01E+05	3.9E-08	9.0E-04
Phenanthrene	6.85E+04	NA	NA
Pyrene	8.04E+03	NA	NA
Toluene	3.49E+05	NA	4.6E-05
Trichloroethene	4.31E+05	3.3E-07	9.3E-02
Xylene (total)	1.01E+05	NA	1.1E-03
Total Risk and Hazard		**1E-06**	**0.2**

ARCADIS MALCOLM PIRNIE

Appendix K

Federal and State Listed and Candidate Species of Potential Occurrence

Appendix K
Federal- and State-Listed and Candidate Species of Potential Occurrence
Ecological Risk Assessment
SWMU 39
Fort Stewart, Georgia

Scientific Name	Common Name	Global Rank	State Rank	Federal Status	State Status	Habitat	Habitat Present?
Amphibians							
Ambystoma cingulatum	Frosted Flatwoods Salamander	G2	S2	LT	T	Pine flatwoods; moist savannas; isolated cypress/gum ponds	no
Pseudacris brimleyi	Brimley's Chorus Frog	G5	S1			Moist forests; swamps; bottomlands	no
Rana capito	Gopher Frog	G3	S3		R	Sandhills; dry pine flatwoods; breed in isolated wetlands	no
Stereochilus marginatus	Many-lined Salamander	G5	S3			Sluggish, swampy streams and bayheads with substrate of leaf litter	no
Birds							
Ammodramus maritimus	Seaside Sparrow	G4	S3			Salt marshes	no
Charadrius melodus	Piping Plover	G3	S1	LT	T	Sandy beaches; tidal flats	no
Charadrius wilsonia	Wilson's Plover	G5	S2		T	Sandy beaches; tidal flats	no
Haematopus palliatus	American Oystercatcher	G5	S2		R	Sandy beaches; tidal flats; salt marshes	no
Haliaeetus leucocephalus	Bald Eagle	G5	S2		T	Edges of lakes & large rivers; seacoasts	no
Himantopus mexicanus	Black-necked Stilt	G5	S3			Shallow ponds; lagoons	no
Lanius ludovicianus migrans	Migrant Loggerhead Shrike	G4T3Q	S3			Open woods; field edges	no
Mycteria americana	Wood Stork	G4	S2	LE	E	Cypress/gum ponds; marshes; river swamps; bays	no
Nyctanassa violacea	Yellow-crowned Night-heron	G5	S3S4			River swamps; marshes; cypress/gum ponds	no
Nycticorax nycticorax	Black-crowned Night-heron	G5	S4			River swamps; marshes; cypress/gum ponds	no
Passerina ciris	Painted Bunting	G5	S3			Lower coastal plain in thickets, woodland borders, and brushy areas	no
Picoides borealis	Red-cockaded Woodpecker	G3	S2	LE	E	Open pine woods; pine savannas	no
Rynchops niger	Black Skimmer	G5	S1		R	Tidal ponds; sandy beaches	no
Sterna antillarum	Least Tern	G4	S3		R	Sandy beaches; sandbars	no
Tyto alba	Barn owl	G5	S3S4			Georgia habitat information not available	no
Fish							
Acipenser brevirostrum	Shortnose Sturgeon	G3	S2	LE	E	Estuaries; lower end of large rivers in deep pools with soft substrates	no
Acipenser oxyrinchus oxyrinchus	Atlantic Sturgeon	G3T3	S3			Georgia habitat information not available	no
Moxostoma robustum	Robust Redhorse	G1	S1		E	Medium to large rivers, shallow riffles to deep flowing water; moderately swift current	no
Umbra pygmaea	Eastern Mudminnow	G5	S2S3			Sluggish streams, ponds, and sloughs with mud bottoms and heavy vegetation	no
Invertebrates							
Toxolasma pullus	Savannah Lilliput	G2	S2		T	Large rivers to small creeks, oxbows, and sloughs	no
Mammals							
Eubalaena glacialis	Northern Atlantic Right Whale	G1	S1	LE	E	Open ocean	no
Lasiurus intermedius	Northern Yellow Bat	G4G5	S2S3			Wooded areas near open water or fields	no
Pseudorca crassidens	False Killer Whale	G4	SNRN			Open ocean	no
Trichechus manatus	Manatee	G2	S1S2	LE	E	Open ocean; estuaries; tidal rivers	no
Reptiles							
Caretta caretta	Loggerhead Sea Turtle	G3	S2	LT	E	Open ocean; sounds; coastal rivers; beaches	no
Chelonia mydas	Green Sea Turtle	G3	S1	LT	T	Open ocean; sounds; coastal rivers; beaches	no
Clemmys guttata	Spotted Turtle	G5	S3		U	Heavily vegetated swamps, marshes, bogs, and small ponds; nest and possibly hibernate in surrounding uplands	no
Crotalus adamanteus	Eastern Diamond-backed Rattlesnake	G4	S4			Early successional habitats on barrier islands and mainland; pine flatwoods; sandhills	no
Dermochelys coriacea	Leatherback Sea Turtle	G2	S1	LE	E	Open ocean; sounds; coastal beaches	no
Gopherus polyphemus	Gopher Tortoise	G3	S2		T	Sandhills; dry hammocks; longleaf pine-turkey oak woods; old fields	no
Lepidochelys kempii	Kemp's or Atlantic Ridley	G1	S1	LE	E	Open ocean; sounds; coastal rivers; beaches	no
Malaclemys terrapin	Diamondback Terrapin	G4	S3		U	Entire coast, estuarine and marine edge; All saltmarsh, beaches	no

Notes:
Global rarity rank: 1 = very rare to 5 = very common globally.
State rarity rank: 1 = very rare to 5 = very common.
State protection status: E = Endangered, T = Threatened, R = Rare, U = Unusual.
U.S. protection status: LE = Listed Endangered, LT = Listed Threatened, Candidate.

Data from:
US Fish and Wildlife Service (USFWS) Endangered Species Program online database http://www.fws.gov/endangered/
Georgia Department of Natural Resources Protected Species List by County (May 2010), online at http://www.georgiawildlife.com/node/1370

Appendix L

Photographs of Drainage Ditch

Appendix L
Photographs of Drainage Ditch
SWMU 39
Fort Stewart, Georgia

Appendix L
Photographs of Drainage Ditch
SWMU 39
Fort Stewart, Georgia

Appendix L
Photographs of Drainage Ditch
SWMU 39
Fort Stewart, Georgia

Appendix L
Photographs of Drainage Ditch
SWMU 39
Fort Stewart, Georgia

Appendix M

Site-Specific Soil Screening Levels

ARCADIS US
801 Corporate Center Drive
Suite 300
Raleigh
North Carolina 27607
Tel 919 854 1282
Fax 919 854 5448

MEMO

To:
Shelley Gibbons

Copies:
Tamar Schlekat

From:
Shawn L. Sager, Ph.D.

Date:
7 August 2014 Revised 3 December 2014

ARCADIS Project No.:
GP08HAFS.2013.DPRFI

Subject:
Site-Specific Soil to Groundwater Screening Levels, SWMU 39, Fort Stewart, Georgia

---

Site-specific soil to groundwater screening levels (SSLs) were derived for two constituents detected in soil above the generic United States Environmental Protection Agency (USEPA) SSL (USEPA 2014), at the request of the Georgia Environmental Protection Division (GAEPD). Site-specific SSLs were derived for benzo(a)anthracene and benzo(b)fluoranthene based on protection of groundwater at the USEPA tap water regional screening levels (RSLs) for each constituent. This memo outlines the approach used to derive the site-specific SSLs.

Environmental Fate and Transport

The environmental fate and transport of constituents is dependent on the physical and chemical properties of the constituents, the environmental transformation processes affecting them, and properties of the medium through which the constituents are migrating. The migration of constituents through the soil and groundwater is dependent on several constituent-specific and site-specific parameters, as described below.

The potential for a constituent to sorb to soil particles affects migration through soil and aquifer materials. When a constituent enters the soil environment, some of it binds with particles through the process of sorption and some dissolves in the water contained in the spaces between the soil particles (pore water;

represented by soil water filled porosity). The term "sorption" includes adsorption (constituent bound to the outside of soil particles) and absorption (constituent distributed throughout the particle matrix). Sorption to soil reduces the potential for constituents to leach from soil to groundwater. A constituent that is absorbed is not mobile because it is not easily released from the particle. Conversely, a constituent that is adsorbed is released more easily and therefore may be mobile. Adsorption potential typically is expressed in terms of a partition coefficient, K_d which is dependent on the organic carbon partition coefficient (K_{oc}) and the fraction of organic carbon (f_{oc}). A partition coefficient is the ratio of the concentration of adsorbed constituent to the concentration of aqueous phase constituent and is expressed in units of milliliters per gram (mL/g). This can be used to estimate the amount of a constituent that is in soil pore water and thus could potentially leach into soil. For constituents that could be volatile, it is also important to account for the phase that is vaporized into the air in soil pores (represented by soil air filled porosity), when attempting to estimate the amount in soil porewater. That can be accounted for using the Henry's Law Constant (H).

Calculation of the Site-specific Soil Screening Level

The site-specific SSL was calculated based on Equation 10 in the USEPA Soil Screening Guidance (USEPA 1996).

$$\text{Screening Level in Soil (mg/kg)} = Cpw \times \left\{ K_d + \left[\frac{\theta_w + \theta_a H'}{\rho_b} \right] \right\}$$

K_d = soil-water partition coefficient (L/kg) = $K_{oc} \times f_{oc}$

K_{oc} = soil organic carbon/water partition coefficient (L/kg)

f_{oc} = fraction organic carbon in soil (g/g)

θ_w = water-filled soil porosity (unitless)

θ_a = air-filled soil porosity (unitless)

ρ_b = dry soil bulk density (kg/L).

n = soil porosity (unitless)

ρ_s = soil particle density (kg/L)

HLC =Henry's Law Constant (atm-m³/mol)

H' = dimensionless Henry's Law Constant (unitless)

The concentration in porewater (C_{pw}) was set at the USEPA tap-water RSL (USEPA 2014) adjusted by a site-specific dilution attenuation factor (DAF). The K_{oc} and H values used in this evaluation were also obtained from the USEPA RSL table's supporting documentation (USEPA 2014).Default values for f_{oc} , θ_w, θ_a, ρ_b were used for sandy clay soil obtained from USEPA guidance (2004).

Calculation of the Dilution Attenuation Factor

As constituents migrate through environmental media, the concentration tends to decrease as the constituents become adsorbed to soil and other particles, and as a result of chemical transformation and dilution within the groundwater. A dilution attenuation factor is used to adjust the SSL to account for these processes. The Summers Model, as presented by the USEPA (1996), was used to derive the dilution attenuation factor for SWMU 39. This model has been used at USEPA Superfund sites for many years to derive site-specific SSLs (USEPA 1989). The model is presented below:

$$C_{Gw} = (Q_p \times C_{pw})/(Q_p + Q_a)$$

Where:

C_{Gw} Groundwater constituent concentration

Q_p Percolation flow rate (cubic meters per year [m^3/yr]); calculated as Area × Infiltration

C_{pw} Soil porewater / leachate constituent concentration (milligrams per liter [mg/L])

Q_a Aquifer flow rate (m^3/yr); calculated as v × t × w, where

v Darcy groundwater flow velocity (meters per year [m/yr])

t Thickness of the aquifer (meters [m])

w Width of the aquifer perpendicular to groundwater flow (m)

Therefore, based on the Summers model, the DAF is derived by the following equation:

$DAF = (Q_p + Q_a) / Q_p$

The site-specific parameters inherent in this calculation include mean annual rainfall, mean annual evapotranspiration, the area of the source, site average Darcy groundwater flow velocity, the thickness of the aquifer, and the width of the impacted aquifer perpendicular to the groundwater flow. Information on rainfall and evapotranspiration were derived from the United States Climate Data Center (2014) and the United States Geological Survey (USGG) (Sanford and Selnick 2013). This information is used to determine the site-specific infiltration of water through the soils. The size of the source area was assumed to be 0.5 acres or 2,023 square meters (m^2). The Darcy groundwater velocity was estimated based on the average hydraulic conductivity of 1.61 feet/day measured from slug testing in the shallow aquifer, the gradient of the shallow groundwater zone of 0.0089 ft/ft, and an assumed mobile porosity for the shallow aquifer (10%). The width of impacted aquifer perpendicular to groundwater flow was set at 45 meters (site average). Shallow aquifer thickness was estimated to be 35 feet (10m).

As shown in Table 1, the SSLs for benzo(a)anthracene and benzo(b)fluoranthene were derived based on protection of groundwater. The target groundwater concentration was the USEPA (2014) tap water RSL.

The site-specific SSLs of 0.12 mg/kg and 0.42 mg/kg for benzo(a)anthracene and benzo(b)fluoranthene, respectively, were calculated, as seen in Table 1. These values represent the soil concentration that should not result in groundwater concentrations exceeding the USEPA (2014) tap water RSL. The site-specific SSLs were compared to the maximum detected constituent concentrations. The maximum detected concentration was slightly higher than the calculated site-specific SSL. Although this may indicate the potential for these two constituents to migrate to groundwater, neither benzo(a)anthracene nor benzo(b)fluroanthene have been detected in groundwater. The migration of these constituents to groundwater is dependent on the organic carbon content of the soil at the site. A default f_{oc} of 2% (USEPA 2002) was used in the calculation. If higher concentrations are present in the soil then these constituents are unlikely to migrate to the extent predicted by the calculation. Therefore, it is unlikely that either constituent will migrate from soil to groundwater.

References

Sanford, W.E., and Selnick, D.L. 2013. Estimation of Evapotraspiration Across the Conterminous United States Using a Regression with Climate and Land-Cover Data. Journal of the American Water Resources Association (JAWRA). 49(1): 217-230.

United States Climate Data Center. 2014. US Climate Data for Fort Stewart Georgia. Available at: http://www.usclimatedata.com/climate/fort-stewart/georgia/united-states/usga0223 .

United States Environmental Protection Agency (USEPA). 2014. Regional Screening Table. Available at: http://www.epa.gov/reg3hwmd/risk/human/rb-concentration_table/index.htm. May.

United States Environmental Protection Agency (USEPA), 2004. User's Guide for Evaluating Subsurface Vapor Intrusion into Buildings. Office of Emergency and Remedial Response, Washington, DC. June 19.

United States Environmental Protection Agency (USEPA). 2002. Supplemental Guidance for Developing Soil Screening Levels for Superfund Sites. Office of Emergency and Remedial Response, Washington, DC. OSWER 9355.4-24. December.

United States Environmental Protection Agency (USEPA). 1996. Soil Screening Guidance: Technical Background Document. Office of Solid Waste and Emergency Response. EPA/540/R-95/128. May.

United States Environmental Protection Agency (USEPA). 1989. Determining Soil Response Action Levels Based on Potential Contaminant Migration to Ground Water: A Compendium of Examples. Office of Emergency and Remedial Response, Washington, D.C.. EPA/540/2-891057. PB90-183575. October.

Table 1
Soil Screening Level Partitioning Equation for Migration to Groundwater
SWMU 39
Fort Stewart, Georgia

Detected Regulated Substance	Tap-water RSL [a] (mg/L)	Cpw (mg/L)	K_{oc} (L/kg)	Henry's Law Constant (HLC) (atm-m³/mol)	H' (unitless)	Soil Screening Level (SSL) [b] (mg/kg)	Maximum Soil Concentration (mg/kg)
Benz(a)anthracene	3.4E-05	3.5E-04	1.77E+05	1.20E-05	4.90E-04	0.12	0.43
Benzo(b)fluoranthene	3.4E-05	3.5E-04	5.99E+05	6.57E-07	2.68E-05	0.42	0.44

[a] USEPA tap-water Regional Screening Level (RSL; USEPA 2014).

[b] SSL (mg/kg; USEPA 1996) = $Cpw \times \left\{ K_d + \left[\frac{\theta_w + \theta_a H'}{\rho_b} \right] \right\}$ for volatile organic constituents

Cpw	=	constituent specific	mg/L	RSL x DAF
DAF	=	10.36		Dilution attenuation factor
K_d	=	$K_{oc} \times f_{oc}$	L/kg	soil-water partition coefficient
K_{oc}	=	constituent specific	L/kg	soil organic carbon/water partition coefficient
f_{oc}	=	0.002	unitless	fraction organic carbon in soil, default (USEPA 2002)
θ_w	=	0.197	unitless	water-filled soil porosity, default for Sandy Clay soil (USEPA 2004)
θ_a	= n-θw =	0.188	unitless	air-filled soil porosity, default for Sandy Clay soil (USEPA 2004)
ρ_b	=	1.63	kg/L	dry soil bulk density, default for Sandy Clay soil (USEPA 2004)
n	=1-(ρb/ρs) =	0.385		soil porosity, default for Sandy Clay soil (USEPA 2004)
ρ_s	=	2.65	kg/L	soil particle density
HLC	=	constituent specific	atm-m³/mol	Henry's Law Constant
H'	=	HLC x 41	unitless	dimensionless Henry's Law Constant
$DAF = (Q_A + Q_P)/Q_P$ =		10.36		
I	=	0.40	m/yr	Infiltration (Rainfall [R] minus Evapotranspiration[ET])
R	=	1.26	m/yr	Average annual rainfall (U.S. Climate Data 2014)
ET	=	0.86	m/yr	Average evapotranspiration rate for Savannah, GA area (Sanford and Selnick 2013)
A	=	2,023	m^2	Area of source area (assumign half an acre)
Q_P	=	814	m^3/yr	Infiltration rate
C_A	=	0		Concentration in the aquifer (upgradient)
v	=	15.58	m/yr	Darcy groundwater flow velocity (site average for shallow aquifer)
t	=	10.7	m	Aquifer thickness (assumed to be 35 feet)
w	=	45.72	m	Width of impacted aquifer perpendicular to groundwater flow (site average)
Q_A	=	7,621	m^3/yr	Groundwater flow rate
atm-m^3/mole	Atmosphere - cubic meter per mole.		m^2	square meter
g	gram		m^3	cubic meter
kg	Kilogram		mg	Milligrams
L	Liter		SSL	Soil Screening Level
m	meter		yr	year